STANDARD PARTS

FORD MOTOR COMPANY

№ 1261

FORD MOTOR COMPANY
STANDARD PARTS

SECTION A

INDEX

FORD MOTOR COMPANY
STANDARD PARTS

CHECK LIST (14)

March 1962

SECTION A

Divider		
A-100.01	June	60
A-100.02	June	60
A-100.03	June	58
A-100.04	June	58
A-200.01	Aug.	56
A-210.02	Aug.	56
A-220.01	July	55
A-230.02	Jan.	56
A-240.01	June	58
A-250.02	June	58
A-260.01	June	58
A-270.02	June	58
A-280.01	June	58
A-290.02	June	58
A-300.01	June	58
A-310.02	June	58
A-320.01	April	57
A-330.02	April	57
A-340.01	May	58
A-350.02	June	58
A-360.01	June	58
A-370.02	June	58
A-380.01	June	58
A-390.02	June	58
A-400.01	April	57
A-410.02	April	57
A-420.01	June	58
A-430.02	June	58
A-440.01	July	55
A-450.02	Aug.	56
A-460.01	April	57
A-500.02	June	58
A-510.01	June	58
A-520.02	April	57
A-530.01	June	58
A-540.02	June	58
A-550.01	April	60
A-600.01	Jan.	56
A-610.02	Nov.	55
A-620.01	Nov.	55
A-630.02	Nov.	55
A-640.01	Nov.	55
A-650.02	Nov.	55
A-670.01	Nov.	58
A-710.02	Nov.	58
A-720.01	Feb.	60
A-730.02	Feb.	60
A-740.01	Feb.	60
A-750.02	April	57
A-760.01	Feb.	60
A-870.02	Aug.	59
A-880.01	April	57
A-890.02	June	58
A-900.01	June	58
A-910.02	June	58
A-920.01	June	58
A-950.02	April	57
A-970.01	June	60
A-993.001	Nov.	58
A-993.012	June	58
A-993.021	June	58
A-993.032	Jan.	56
A-993.041	June	58
A-993.052	Nov.	58
A-993.061	Nov.	58

SECTION B

Divider		
B-201.01	Nov.	55
B-201.02	Nov.	55
B-201.03	Nov.	55
B-201.04	Nov.	55
B-201.05	Nov.	55
B-201.06	Nov.	55
B-251.01	March	62
B-251.02	March	62
B-301.01	July	55
B-350.02	July	55
B-351.01	July	55
B-400.02	July	55

SECTION B (Cont'd)

B-420.01	Jan.	56
B-440.02	Jan.	56
B-450.01	Jan.	56
B-460.02	Jan.	56
B-460.03	Jan.	56
B-500.01	July	55
B-500.02	July	55
B-500.03	July	55
B-500.04	July	55
B-551.01	July	55
B-950.01	July	55
B-950.02	July	55

SECTION C

Divider		
C-100.01	June	58
C-100.12	June	58
C-101.11	June	58
C-103.12	Feb.	60
C-150.11	June	58
C-151.12	June	58
C-153.13	June	58
C-200.02	June	58
C-200.03	June	58
C-200.12	June	58
C-200.13	June	58
C-250.14	June	58
C-310.01	June	58
C-310.12	June	58
C-311.13	Oct.	58
C-312.14	Oct.	58
C-360.01	July	60
C-360.12	July	60
C-361.11	July	60
C-400.02	June	58
C-400.03	June	58
C-400.12	June	58
C-402.13	June	58
C-450.14	June	58
C-452.15	June	58
C-500.02	June	58
C-500.03	June	58
C-500.12	June	58
C-500.13	June	58
C-501.14	June	58
C-502.15	June	58
C-550.16	June	58
C-551.17	June	58
C-552.18	June	58
C-600.01	June	58
C-600.02	June	58
C-600.11	June	58
C-600.12	June	58
C-601.13	June	58
C-602.14	June	58
C-650.15	Feb.	60
C-651.16	Feb.	60
C-652.17	Feb.	60
C-700.21	April	60
C-700.40	April	60
C-700.51	April	60
C-700.60	April	60
C-710.21	June	58
C-710.22	June	58
C-710.51	June	58
C-710.52	June	58
C-720.21	Feb.	60
C-720.22	June	58
C-720.61	June	58
C-720.62	June	58
C-950.01	June	58
C-950.02	June	58
C-950.03	June	58
C-950.04	June	58
C-950.05	June	58

SECTION D

Divider		
D-111.01	March	58
D-111.02	April	57
D-111.03	April	57
D-111.04	April	57
D-113.01	March	58
D-113.02	March	58
D-113.03	April	57
D-113.04	April	57
D-121.01	March	58
D-121.02	March	58
D-121.03	March	58
D-121.04	March	58
D-123.01	March	58
D-123.02	March	58
D-123.03	March	58
D-123.04	March	58
D-123.05	March	58
D-123.06	April	57
D-123.07	April	57
D-123.08	April	57
D-123.09	April	57
D-130.01	April	57
D-130.02	April	57
D-130.03	April	57
D-130.04	April	57
D-131.01	April	57
D-131.02	April	57
D-131.03	April	57
D-131.04	April	57
D-132.01	July	60
D-132.02	July	60
D-132.03	July	60
D-132.04	July	60
D-141.01	April	57
D-141.02	April	57
D-141.03	April	57
D-141.04	April	57
D-143.01	April	57
D-143.02	April	57
D-143.03	April	57
D-143.04	April	57
D-143.05	April	57
D-143.06	April	57
D-143.07	April	57
D-143.08	April	57
D-143.09	April	57
D-151.01	April	57
D-151.02	April	57
D-151.03	April	57
D-151.04	April	57
D-153.01	March	58
D-153.02	March	58
D-153.03	April	57
D-153.04	April	57
D-161.01	April	57
D-161.02	April	57
D-161.03	April	57
D-161.04	April	57
D-163.01	April	57
D-163.02	April	57
D-163.03	April	57
D-163.04	April	57
D-220.01	April	57
D-260.02	April	57
D-321.01	April	57
D-341.02	April	57
D-361.01	April	57
D-950.01	June	58
D-950.02	June	58
D-950.03	March	58
D-950.04	April	57
D-950.05	March	58
D-950.06	April	57
D-950.07	April	57
D-950.08	April	57
D-950.09	April	57
D-950.10	April	57
D-950.11	April	57
D-950.12	April	57
D-950.13	April	57

SECTION E

Divider		
E-110.01	Aug.	56
E-115.02	Aug.	56
E-120.01	Aug.	56
E-125.02	Aug.	56
E-130.01	Aug.	56
E-130.02	Aug.	56
E-130.05	May	58
E-135.02	May	58
E-135.03	Feb.	60
E-135.04	Feb.	60
E-135.05	April	60
E-135.06	April	60
E-135.07	July	60
E-136.01	April	60
E-136.02	April	60
E-140.01	May	58
E-140.02	May	58
E-145.01	June	58
E-210.01	Aug.	56
E-211.02	Aug.	56
E-310.01	Aug.	56
E-310.02	Aug.	56
E-410.01	Aug.	56
E-410.02	Aug.	56
E-410.03	Aug.	56
E-410.04	Aug.	56
E-410.05	Aug.	56
E-410.06	Aug.	56
E-410.07	Aug.	56
E-410.08	Aug.	56
E-410.09	Aug.	56
E-410.10	April	57
E-510.01	Aug.	56
E-510.02	Aug.	56
E-510.03	Aug.	56
E-510.04	Aug.	56
E-510.05	Aug.	56
E-510.06	Aug.	56
E-610.01	April	60
E-610.02	April	60
E-710.01	April	60
E-950.01	May	58
E-950.02	May	58
E-950.03	May	58
E-950.04	May	58
E-950.05	May	58
E-950.06	May	58
E-950.07	May	58
E-950.08	May	58
E-950.09	May	58
E-950.10	May	58
E-950.11	May	58
E-950.12	May	58
E-950.13	May	58

SECTION F

Divider		
F-100.01	July	55
F-200.02	July	61
F-201.01	July	61
F-201.02	July	61
F-210.01	July	55
F-220.02	July	55
F-300.01	July	55
F-950.01	June	58
F-950.02	June	58
F-950.03	June	58
F-950.04	June	58

PRINTED IN U.S.A.

FORD MOTOR COMPANY
STANDARD PARTS

CHECK LIST (CONT'D)

March 1962

SECTION G

Divider		
G-110.01	Nov.	55
G-110.02	Nov.	55
G-111.01	Nov.	55
G-120.02	Nov.	55
G-120.03	Nov.	55
G-130.02	Nov.	55
G-130.11	Nov.	55
G-140.02	Nov.	55
G-140.03	Nov.	55
G-150.02	Nov.	55
G-150.03	Nov.	55
G-160.02	Nov.	55
G-160.03	Nov.	55
G-240.02	Nov.	55
G-250.01	Nov.	55
G-340.02	Nov.	55
G-343.01	Nov.	55
G-350.02	Nov.	55
G-353.01	Nov.	55
G-450.02	Nov.	55
G-950.01	Nov.	55

SECTION H

Divider		
H-1	Nov.	51
H-2	Nov.	51
H-3	Nov.	51
H-4	Nov.	51
H-5	Nov.	51
H-6	Nov.	51
H-7	Nov.	51
H-8	Nov.	51
H-9	Nov.	51
H-10	Nov.	51
H-11	Nov.	51

SECTION J

Divider		
J-110.01	Feb.	60
J-120.02	Feb.	60
J-130.01	Feb.	60
J-130.02	Feb.	60
J-140.01	Feb.	60
J-140.02	Feb.	60
J-140.03	Feb.	60
J-150.02	Feb.	60
J-160.01	Feb.	60
J-160.02	Feb.	60
J-160.03	Feb.	60
J-160.04	Feb.	60
J-160.05	Feb.	60
J-160.06	Feb.	60
J-170.01	Feb.	60
J-180.02	Feb.	60
J-180.03	Feb.	60
J-180.04	Feb.	60
J-180.05	Feb.	60
J-180.06	Feb.	60
J-180.07	Feb.	60
J-200.02	Feb.	60
J-200.03	Feb.	60
J-300.02	Feb.	60
J-400.01	Feb.	60
J-410.02	Feb.	60
J-950.01	Feb.	60
J-950.02	Feb.	60
J-950.03	Feb.	60
J-950.04	Feb.	60

SECTION K

Divider		
K-1	Jan.	49
K-2	Jan.	49
K-3	Jan.	49
K-4	Jan.	49
K-5	Nov.	50
K-6	Nov.	50
K-7	Jan.	50
K-8	Jan.	50
K-101	Nov.	51
K-600.01	June	60
K-603.02	June	60
K-604.01	June	60
K-605.02	June	60
K-610.01	June	60
K-613.02	June	60
K-614.01	June	60
K-615.02	June	60
K-616.01	June	60
K-616.02	June	60
K-616.03	June	60
K-700.01	Sept.	59
K-700.02	July	61
K-700.03	Sept.	59
K-700.04	Oct.	60
K-950.02	Sept.	59
K-950.03	June	60
K-950.04	June	60
K-950.05	June	60

SECTION L

Divider		
L-5	July	49
L-6	July	49
L-7	June	50
L-8	July	49
L-9	Aug.	54
L-10	July	51
L-11	June	50
L-12	June	50
L-13	June	50
L-14	June	50
L-15	June	50
L-16	July	51
L-17	June	50
L-18	July	51
L-19	July	51
L-20	July	51
L-21	July	51
L-22	July	51
L-23	Nov.	50
L-24	Nov.	50
L-25	June	50
L-100.01	Aug.	59
L-100.02	Aug.	59
L-100.03	Aug.	59
L-100.04	Aug.	59
L-103	Nov.	50
L-600.01	April	57
L-600.02	Aug.	56
L-950.01	Aug.	59
L-950.02	Aug.	59
L-950.03	July	49
L-950.11	April	57

SECTION Z

Divider		
Z-100.01	April	57
Z-100.02	April	57
Z-110.01	July	59
Z-110.02	July	59
Z-110.03	July	61
Z-110.04	July	61
Z-110.05	July	61
Z-110.06	July	61
Z-120.01	Aug.	60
Z-130.01	April	57
Z-132.01	April	57
Z-140.01	March	62
Z-140.02	March	62
Z-140.03	March	62
Z-140.04	March	62
Z-140.05	March	62
Z-140.06	March	62
Z-140.07	March	62

FORD MOTOR COMPANY
STANDARD PARTS

CHECK LIST

July 1960

SECTION A

Divider		
A-100.01	June	60
A-100.02	June	60
A-100.03	June	58
A-100.04	June	58
A-200.01	Aug.	56
A-210.02	Aug.	56
A-220.01	July	55
A-230.02	Jan.	56
A-240.01	June	58
A-250.02	June	58
A-260.01	June	58
A-270.02	June	58
A-280.01	June	58
A-290.02	June	58
A-300.01	June	58
A-310.02	June	58
A-320.01	April	57
A-330.02	April	57
A-340.01	May	58
A-350.02	June	58
A-360.01	June	58
A-370.02	June	58
A-380.01	June	58
A-390.02	June	58
A-400.01	April	57
A-410.02	April	57
A-420.01	June	58
A-430.02	June	58
A-440.01	July	55
A-450.02	Aug.	56
A-460.01	April	57
A-500.02	June	58
A-510.01	June	58
A-520.02	April	57
A-530.01	June	58
A-540.02	June	58
A-550.01	April	60
A-600.01	Jan.	56
A-610.02	Nov.	55
A-620.01	Nov.	55
A-630.02	Nov.	55
A-640.01	Nov.	55
A-650.02	Nov.	55
A-670.01	Nov.	58
A-710.02	Nov.	58
A-720.01	Feb.	60
A-730.02	Feb.	60
A-740.01	Feb.	60
A-750.02	April	57
A-760.01	Feb.	60
A-870.02	Aug.	59
A-880.01	April	57
A-890.02	June	58
A-900.01	June	58
A-910.02	June	58
A-920.01	June	58
A-950.02	April	57
A-970.01	June	60
A-993.001	Nov.	58
A-993.012	June	58
A-993.021	June	58
A-993.032	Jan.	56
A-993.041	June	58
A-993.052	Nov.	58
A-993.061	Nov.	58

SECTION B

Divider		
B-201.01	Nov.	55
B-201.02	Nov.	55
B-201.03	Nov.	55
B-201.04	Nov.	55
B-201.05	Nov.	55
B-201.06	Nov.	55
B-251.01	July	55
B-251.02	July	55
B-301.01	July	55
B-350.02	July	55
B-351.01	July	55
B-400.02	July	55
B-420.01	Jan.	56
B-440.02	Jan.	56
B-450.01	Jan.	56
B-460.02	Jan.	56
B-460.03	Jan.	56
B-500.01	July	55
B-500.02	July	55
B-500.03	July	55
B-500.04	July	55
B-551.01	July	55
B-950.01	July	55
B-950.02	July	55

SECTION C

Divider		
C-100.01	June	58
C-100.12	June	58
C-101.11	June	58
C-103.12	Feb.	60
C-150.11	June	58
C-151.12	June	58
C-153.13	June	58
C-200.02	June	58
C-200.03	June	58
C-200.12	June	58
C-200.13	June	58
C-250.14	June	58
C-310.01	June	58
C-310.12	June	58
C-311.13	Oct.	58
C-312.14	Oct.	58
C-360.01	July	60
C-360.12	July	60
C-361.11	July	60
C-400.02	June	58
C-400.03	June	58
C-400.12	June	58
C-402.13	June	58
C-450.14	June	58
C-452.15	June	58
C-500.02	June	58
C-500.03	June	58
C-500.12	June	58
C-500.13	June	58
C-501.14	June	58
C-502.15	June	58
C-550.16	June	58
C-551.17	June	58
C-552.18	June	58
C-600.01	June	58
C-600.02	June	58
C-600.11	June	58
C-600.12	June	58
C-601.13	June	58
C-602.14	June	58
C-650.15	Feb.	60
C-651.16	Feb.	60
C-652.17	Feb.	60
C-700.21	April	60
C-700.40	April	60
C-700.51	April	60
C-700.60	April	60
C-710.21	June	58
C-710.22	June	58
C-710.51	June	58
C-710.52	June	58
C-720.21	Feb.	60
C-720.22	June	58
C-720.61	June	58
C-720.62	June	58
C-950.01	June	58
C-950.02	June	58
C-950.03	June	58
C-950.04	June	58
C-950.05	June	58

SECTION D

Divider		
D-111.01	March	58
D-111.02	April	57
D-111.03	April	57
D-111.04	April	57
D-113.01	March	58
D-113.02	March	58
D-113.03	April	57
D-113.04	April	57
D-121.01	March	58
D-121.02	March	58
D-121.03	March	58
D-121.04	March	58
D-123.01	March	58
D-123.02	March	58
D-123.03	March	58
D-123.04	March	58
D-123.05	March	58
D-123.06	April	57
D-123.07	April	57
D-123.08	April	57
D-123.09	April	57
D-130.01	April	57
D-130.02	April	57
D-130.03	April	57
D-130.04	April	57
D-131.01	April	57
D-131.02	April	57
D-131.03	April	57

SECTION D (Cont'd)

D-131.04	April	57
D-132.01	July	60
D-132.02	July	60
D-132.03	July	60
D-132.04	July	60
D-141.01	April	57
D-141.02	April	57
D-141.03	April	57
D-141.04	April	57
D-143.01	April	57
D-143.02	April	57
D-143.03	April	57
D-143.04	April	57
D-143.05	April	57
D-143.06	April	57
D-143.07	April	57
D-143.08	April	57
D-143.09	April	57
D-151.01	April	57
D-151.02	April	57
D-151.03	April	57
D-151.04	April	57
D-153.01	March	58
D-153.02	March	58
D-153.03	April	57
D-153.04	April	57
D-161.01	April	57
D-161.02	April	57
D-161.03	April	57
D-161.04	April	57
D-163.01	April	57
D-163.02	April	57
D-163.03	April	57
D-163.04	April	57
D-220.01	April	57
D-260.02	April	57
D-321.01	April	57
D-341.02	April	57
D-361.01	April	57
D-950.01	June	58
D-950.02	June	58
D-950.03	March	58
D-950.04	April	57
D-950.05	March	58
D-950.06	April	57
D-950.07	April	57
D-950.08	April	57
D-950.09	April	57
D-950.10	April	57
D-950.11	April	57
D-950.12	April	57
D-950.13	April	57

SECTION E

Divider		
E-110.01	Aug.	56
E-115.02	Aug.	56
E-120.01	Aug.	56
E-125.02	Aug.	56
E-130.01	Aug.	56
E-130.02	Aug.	56
E-130.05	May	58
E-135.02	May	58
E-135.03	Feb.	60
E-135.04	Feb.	60
E-135.05	April	60
E-135.06	April	60
E-135.07	July	60
E-136.01	April	60
E-136.02	April	60
E-140.01	May	58
E-140.02	May	58
E-145.01	June	58
E-210.01	Aug.	56
E-211.02	Aug.	56
E-310.01	Aug.	56
E-310.02	Aug.	56
E-410.01	Aug.	56
E-410.02	Aug.	56
E-410.03	Aug.	56
E-410.04	Aug.	56
E-410.05	Aug.	56
E-410.06	Aug.	56
E-410.07	Aug.	56
E-410.08	Aug.	56
E-410.09	Aug.	56
E-410.10	April	57
E-510.01	Aug.	56
E-510.02	Aug.	56
E-510.03	Aug.	56
E-510.04	Aug.	56
E-510.05	Aug.	56
E-510.06	Aug.	56

SECTION E (Cont'd)

E-610.01	April	60
E-610.02	April	60
E-710.01	April	60
E-950.01	May	58
E-950.02	May	58
E-950.03	May	58
E-950.04	May	58
E-950.05	May	58
E-950.06	May	58
E-950.07	May	58
E-950.08	May	58
E-950.09	May	58
E-950.10	May	58
E-950.11	May	58
E-950.12	May	58
E-950.13	May	58

SECTION F

Divider		
F-100.01	July	55
F-200.02	July	55
F-201.01	July	55
F-201.02	July	55
F-210.01	July	55
F-220.02	July	55
F-300.01	July	55
F-950.01	June	58
F-950.02	June	58
F-950.03	June	58
F-950.04	June	58

SECTION G

Divider		
G-110.01	Nov.	55
G-110.02	Nov.	55
G-111.01	Nov.	55
G-120.02	Nov.	55
G-120.03	Nov.	55
G-130.02	Nov.	55
G-130.11	Nov.	55
G-140.02	Nov.	55
G-140.03	Nov.	55
G-150.02	Nov.	55
G-150.03	Nov.	55
G-160.02	Nov.	55
G-160.03	Nov.	55
G-240.02	Nov.	55
G-250.01	Nov.	55
G-340.02	Nov.	55
G-343.01	Nov.	55
G-350.02	Nov.	55
G-353.01	Nov.	55
G-450.02	Nov.	55
G-950.01	Nov.	55

SECTION H

Divider		
H-1	Nov.	51
H-2	Nov.	51
H-3	Nov.	51
H-4	Nov.	51
H-5	Nov.	51
H-6	Nov.	51
H-7	Nov.	51
H-8	Nov.	51
H-9	Nov.	51
H-10	Nov.	51
H-11	Nov.	51

SECTION J

Divider		
J-110.01	Feb.	60
J-120.02	Feb.	60
J-130.01	Feb.	60
J-130.02	Feb.	60
J-140.01	Feb.	60
J-140.02	Feb.	60
J-140.03	Feb.	60
J-150.02	Feb.	60
J-160.01	Feb.	60
J-160.02	Feb.	60
J-160.03	Feb.	60
J-160.04	Feb.	60

FORD MOTOR COMPANY
STANDARD PARTS

CHECK LIST (CONT'D)
July 1960

SECTION J (Cont'd)

J-160.05	Feb.	60
J-160.06	Feb.	60
J-170.01	Feb.	60
J-180.02	Feb.	60
J-180.03	Feb.	60
J-180.04	Feb.	60
J-180.05	Feb.	60
J-180.06	Feb.	60
J-180.07	Feb.	60
J-200.02	Feb.	60
J-200.03	Feb.	60
J-300.02	Feb.	60
J-400.01	Feb.	60
J-410.02	Feb.	60
J-950.01	Feb.	60
J-950.02	Feb.	60
J-950.03	Feb.	60
J-950.04	Feb.	60

SECTION K

Divider		
K-1	Jan.	49
K-2	Jan.	49
K-3	Jan.	49
K-4	Jan.	49
K-5	Nov.	50
K-6	Nov.	50
K-7	Jan.	50
K-8	Jan.	50
K-101	Nov.	51
K-600.01	June	60
K-603.02	June	60
K-604.01	June	60
K-605.02	June	60
K-610.01	June	60
K-613.02	June	60
K-614.01	June	60
K-615.02	June	60
K-616.01	June	60
K-616.02	June	60
K-616.03	June	60
K-700.01	Sept.	59
K-700.02	Sept.	59
K-700.03	Sept.	59
K-700.04	Feb.	60
K-950.02	Sept.	59
K-950.03	June	60
K-950.04	June	60
K-950.05	June	60

SECTION L

Divider		
L-5	July	49
L-6	July	49
L-7	June	50
L-8	July	49
L-9	Aug.	54
L-10	July	51
L-11	June	50
L-12	June	50
L-13	June	50
L-14	June	50
L-15	June	50
L-16	July	51
L-17	June	50
L-18	July	51
L-19	July	51
L-20	July	51
L-21	July	51
L-22	July	51
L-23	Nov.	50
L-24	Nov.	50
L-25	June	50
L-100.01	Aug.	59
L-100.02	Aug.	59
L-100.03	Aug.	59
L-100.04	Aug.	59
L-103	Nov.	50
L-600.01	April	57
L-600.02	Aug.	56
L-950.01	Aug.	59
L-950.02	Aug.	59
L-950.03	July	49
L-950.11	April	57

SECTION Z

Divider		
Z-100.01	April	57
Z-100.02	April	57

SECTION Z (Cont'd)

Z-110.01	July	59
Z-110.02	July	59
Z-110.03	Feb.	60
Z-110.04	Feb.	60
Z-110.05	Feb.	60
Z-110.06	April	60
Z-120.01	June	60
Z-130.01	April	57
Z-132.01	April	57
Z-140.01	March	57
Z-140.02	March	57
Z-140.03	March	57
Z-140.04	March	57
Z-140.05	March	57
Z-140.06	March	57
Z-150.01	March	57
Z-150.02	March	57
Z-150.03	March	57
Z-150.04	March	57
Z-150.05	March	57
Z-150.06	March	57
Z-150.07	March	57
Z-150.08	March	57
Z-150.09	March	57
Z-150.10	March	57
Z-150.11	March	57
Z-150.12	March	57
Z-150.13	March	57
Z-150.14	March	57
Z-150.15	March	57
Z-150.16	March	57
Z-150.17	March	57
Z-150.18	March	57
Z-150.19	March	57
Z-150.20	March	57
Z-150.21	March	57
Z-150.22	March	57
Z-152.01	March	57
Z-152.02	March	57
Z-152.03	March	57
Z-152.04	March	57
Z-152.05	March	57
Z-152.06	March	57
Z-152.07	March	57
Z-152.08	March	57
Z-152.09	March	57
Z-152.10	March	57
Z-152.11	March	57
Z-152.12	March	57
Z-152.13	March	57
Z-152.14	March	57
Z-152.15	March	57
Z-152.16	March	57
Z-160.01	March	57
Z-160.02	March	57
Z-160.03	March	57
Z-160.04	March	57
Z-160.05	March	57
Z-160.06	March	57
Z-161.01	March	57
Z-161.02	March	57
Z-161.03	March	57
Z-162.02	March	57
Z-162.03	March	57
Z-162.04	March	57
Z-162.05	March	57
Z-162.06	March	57
Z-162.07	March	57
Z-163.02	March	57
Z-163.03	March	57
Z-164.02	March	57
Z-164.03	March	57
Z-164.04	March	57
Z-164.05	March	57
Z-164.06	March	57
Z-164.07	March	57
Z-164.08	March	57
Z-164.09	March	57
Z-164.10	March	57
Z-164.11	March	57
Z-164.12	March	57
Z-165.01	March	57
Z-165.02	March	57
Z-165.03	March	57
Z-166.02	March	57
Z-166.03	March	57
Z-166.04	March	57
Z-166.05	March	57
Z-166.06	March	57
Z-166.07	March	57
Z-166.08	March	57
Z-166.09	March	57
Z-166.10	March	57
Z-166.11	March	57

SECTION Z (Cont'd)

Z-166.12	March	57
Z-166.13	March	57
Z-166.14	March	57
Z-166.15	March	57
Z-166.16	March	57
Z-166.17	March	57
Z-166.18	March	57
Z-166.19	March	57
Z-166.20	March	57
Z-166.21	March	57
Z-166.22	March	57
Z-166.23	March	57
Z-166.24	March	57
Z-166.25	March	57
Z-166.26	March	57
Z-166.27	March	57
Z-166.28	March	57
Z-166.29	March	57
Z-167.02	March	57
Z-168.01	March	57
Z-168.02	March	57
Z-168.03	March	57
Z-168.04	March	57
Z-168.05	March	57
Z-168.06	March	57
Z-168.07	March	57
Z-168.08	March	57
Z-168.09	March	57
Z-168.10	March	57
Z-168.11	March	57
Z-168.12	March	57

FORD MOTOR COMPANY
STANDARD PARTS

INDEX

BOLTS
- Carriage
  - Class 2A B-400.02
  - Ribbed Neck - Class 2A B-440.02
- General Specifications. B-950.01
- Hexagon Head
  - Class 2A - Steel - M-3500-B. B-201.01
  - Class 2A - Steel - M-3500-E. B-201.05
- Hexagon Head - Self Locking
  - Class 2A - Steel - M-3500-E. B-251.02
  - Class 2A - Steel - M-3500-G. B-251.01
- Lag (Screws). B-551.01
- Plow
  - Class 2A - Steel - M-3500-A. B-460.03
  - Class 2A - Steel - M-3500-E. B-460.02
- Round Head
  - Short Square Neck - Class 2A B-420.01
  - Thin
    - Class 2A - Pointed. B-351.01
    - Class 2A - Sheared Point. B-350.02
- Square Head
  - Class 2A B-301.01
- Step
  - Class 2A B-450.01

BRADS
- Barbed. H-3
- Smooth. H-3

BUTTONS, PLUG J-410.02

CLEVISES
- Adjustable. J-200.03
- Non-Adjustable. J-200.02

CLIPS, TUBING K-7
- General Specifications. K-101

COTTER PINS J-110.01

CURTAIN FASTENERS
- Button. K-2
- Eyelet. K-4; K-5
  - Clinch K-2
- General Specifications. K-101
- Grommet K-6
- Nail, Ratchet K-6
- Plate, Clinch K-1; K-4
- Socket. K-1; K-3
  - Split Ring K-3
- Stud
  - Button K-3
  - Capped K-6
  - Clinched Type. K-3; K-5
  - Expansible K-3
  - Floating K-6
  - Flush. K-5
  - Machine Screw Base K-1; K-2; K-5
  - Nail Retainer. K-6
  - Sheet Metal Screw Base K-1; K-2
- Turn Button
  - Pronged Base K-4
  - Sheet Metal Screw Base K-4
  - Two Screw Base K-4
- Washer
  - Eyelet K-4; K-5
  - Grommet. K-6

FILLER AND DRAIN PLUGS
- External Hexagon Wrenching. L-7
- External Square Wrenching L-7
- General Specifications. L-950.03
- Internal Hexagon Wrenching. L-8
- Internal Square Wrenching L-8
  - (Also see PIPE PLUGS)

FINISHES - STANDARD PARTS
- Specific Finishes Z-110.02
- Standard Finishes
  - Numerical Listing. Z-110.03
  - Special Finishes Z-110.01
  - Standard Z-110.01

GAGES AND GAGING - STANDARD PARTS
- Penetration Gages and Gaging for Flat Head Screws. Z-130.01
- Protrusion Gages and Gaging for Cross Recessed Head Screws Z-132.01

HOSE CLAMPS K-700.01

KEYS
- Woodruff. J-300.02

LUBRICATION FITTINGS
- Elbow Adapter L-100.04
- Elbow Fittings. L-100.02
- Extensions. L-100.04
- Straight Fittings L-100.01
- General Specifications. L-950.01
- Taper Drive Thread. L-100.03

MATERIALS - STANDARD PARTS
- Physical Requirements Z-120.01

NAILS
- Brads - (See BRADS)
- Casing
  - Barbed H-2
  - Smooth H-2
- Clinch
  - Barbed H-7
  - Smooth H-7
- Common Wire
  - Barbed H-1
  - Smooth H-1
- Countersunk Head
  - Barbed H-8
  - Smooth H-8
- Fine
  - Barbed H-5
  - Smooth H-5
- Finishing
  - Barbed H-4
  - Smooth H-4
- Flat Head
  - Barbed H-6
  - Smooth H-6
- Ratchet K-6
- Round Head
  - Barbed H-9
  - Smooth H-9
- Tacks (See TACKS)

NUTS
- Clinch
  - "C" Type - Class 2B. E-310.01
  - General Specifications E-950.01
  - Recommended Hole Sizes - (See Engineering Drafting Manual)
  - Square Type - Class 2B E-310.02
- Crown
  - Class 2B Brass E-140.01
  - Class 2B - Steel E-140.01; E-140.02
  - General Specifications E-950.01
- General Specifications. E-950.01
- Hexagon
  - Castle and Slotted
    - Class 2B - Steel. E-130.05
  - General Specifications E-950.01
  - Jam
    - Class 2B - Steel. E-120.01
  - Lock
    - Free Running Type
      - Class 2B - Steel E-135.02
    - Prevailing Torque Type
      - Class 2B - Steel E-135.05
  - Machine Screw
    - Class 2B - Brass. E-125.02
    - Class 2B - Steel. E-125.02
  - Slotted
    - Class 2B - Steel. E-130.01; E-130.02
  - Standard
    - Class 2B - Brass. E-110.01
    - Class 2B - Steel. E-110.01
  - Thick
    - Class 2B - Steel. E-115.02
  - Thick Lock
    - Free Running Type
      - Class 2B - Steel E-136.01
    - Prevailing Torque Type
      - Class 2B - Steel E-136.02
- Spring
  - Flat E-510.01
  - Flat Latch Type. E-510.04
  - Flat Twin Type E-510.03
  - General Specifications E-950.01
  - "J" Shape. E-510.05
    - Assy. Information E-950.10
  - Stud Clip - Flat E-510.02
  - "U" Shape. E-510.06
    - Assy. Information E-950.12
- Square
  - Class 2B - Steel E-210.01
  - General Specifications E-950.01
- Square Machine Screw
  - Class 2B - Brass E-211.02
  - Class 2B - Steel E-211.02
  - General Specifications E-950.01
- Stamped
  - Class 2B - MOD E-610.01; E-610.02
  - General Specifications E-950.01
- Tee
  - General Specifications E-950.01

INDEX

NUTS (Cont'd)
- Tee (Cont'd)
  - Plain Base E-410.01
  - Plain Base - Wide. E-410.05
  - Two Boss Barrel Side E-410.03
  - Two Boss Barrel Side - Wide. E-410.06
  - Three Boss Barrel Side - Round E-410.09
  - Three Boss Barrel Side - "C" Shape E-410.10
  - Four Boss Barrel Side - Wide E-410.07
  - Two Boss Base Side E-410.03
  - Two Boss Base Side - Wide. E-410.06
  - Three Boss Base Side - Round E-410.09
  - Three Boss Base Side - "C" Style E-410.10
  - Four Boss Base Side. E-410.04
  - Four Boss Base Side - Wide E-410.07
  - Two Hole Base. E-410.01
  - Two Hole Base - Wide E-410.05
  - Three Hole Base - Round. E-410.08
  - Two Countersunk Hole Barrel Side E-410.02
  - Two Countersunk Hole Base Side E-410.02
  - Three Short Prong Barrel Side. E-410.04
  - Four Prong Barrel Side E-410.10
  - Three Hole, Three Prong Barrel Side -Round . E-410.08
  - Recommended Hole Sizes for Installation. . . E-950.09
- Wing
  - Forged E-710.01
  - General Specifications E-950.01
  - Stamped. E-710.01

NUT AND WASHER ASSEMBLY
- Class 2B - Steel. E-145.01
- General Specifications. E-950.01

PINS
- Clevis. J-180.02
- Cotter. J-110.01
- Dowel
  - Brass. J-150.02
  - Steel. J-150.02
- General Specifications. J-950.01
- Groove. J-160.01
- Spring
  - Coiled
    - Heavy J-140.03
    - Medium. J-140.02
  - Rolled J-140.01
- Straight
  - Chamfered Ends
    - Brass J-130.02
    - Steel J-130.02
  - Sheared Ends
    - Brass J-130.01
    - Steel J-130.01
- Taper J-170.01

PIPE PLUGS
- External Hexagon Wrenching. L-5
- External Square Wrenching L-5
- General Specifications. L-950.03
- Internal Hexagon Wrenching. L-6
- Internal Square Wrenching L-6
- (Also see Filler and Drain Plugs)

PLUG BUTTONS J-410.02

PLUGS
- Expansion J-400.01
- Filler and Drain (See Filler and Drain Plugs)
- Pipe (See Pipe Plugs)

RETAINERS
- Rings K-600.01
- Springs J-120.02

RIVETS
- General Specifications. G-950.01
- Semi-Tubular
  - Flat C'sunk Head
    - Brass G-343.01
    - Steel G-340.02
  - General Specifications G-950.01
  - Oval Head
    - Brass G-353.01
    - Steel G-350.02
- Solid
  - Button Head
    - Pointed
      - Steel. G-111.01
    - Sheared End
      - Brass. G-110.02
      - Steel. G-110.01; G-110.02

RIVETS (Cont'd)
- Solid (Cont'd)
  - Flat Head
    - Sheared End
      - Steel. G-130.02
  - Flat C'sunk Head
    - Sheared End
      - Steel. G-140.02
  - General Specifications G-950.01
  - Oval Head
    - Sheared End
      - Brass. G-150.03
      - Steel. G-150.02
  - Pan Head
    - Sheared End
      - Steel. G-120.02
  - Truss Head
    - Sheared End
      - Steel. G-160.02
- Split
  - Flat C'sunk Head
    - Steel G-240.02
  - General Specifications G-950.01
  - Oval Head
    - Brass G-250.01
    - Steel G-250.01
- Tinners
  - Steel. G-130.11
- Tubular
  - Flat C'sunk Head
    - Brass G-450.02
    - Steel G-450.02
  - General Specifications G-950.01
  - Oval Head
    - Steel G-450.02

SCREWS
- Drive
  - Flat Head - Type U Point D-220.01
  - General Specifications D-950.01
  - Round Head - Type U Point. D-260.02
- Machine
  - Fillister Head
    - Recessed
      - Header Point
        - Steel C-150.11
    - Slotted
      - Header Point
        - Brass C-100.12
        - Steel C-100.12
      - Sheared Point
        - Brass C-100.01
        - Steel C-100.01
  - Flat Head
    - Protrusion Gages and Gaging for Flat Head Screws Z-130.02
    - Recessed
      - Header Point
        - Steel C-250.14
    - Slotted
      - Header Point
        - Brass C-200.13
        - Steel C-200.12
      - Sheared Point
        - Brass C-200.03
        - Steel C-200.02
  - General Specifications C-950.01
  - Header Point Specifications. C-950.02
  - Hexagon Head
    - Header Point
      - Steel. C-310.12
    - Sheared Point
      - Steel. C-310.01
  - Hexagon Washer Head
    - Header Point
      - Steel. C-360.12
    - Sheared Point
      - Steel. C-360.01
  - Oval Head
    - Recessed
      - Header Point
        - Steel C-450.14
    - Slotted
      - Header Point
        - Brass C-400.12
        - Steel C-400.12
      - Sheared Point
        - Brass C-400.03
        - Steel C-400.02
  - Pan Head
    - Recessed
      - Header Point
        - Steel C-550.16
    - Slotted
      - Header Point
        - Brass C-500.13
        - Steel C-500.12
      - Sheared Point
        - Brass C-500.03
        - Steel C-500.02
  - Penetration Gages and Gaging for Recessed Head Screws Z-130.01

INDEX

SCREWS (Cont'd)
- Machine (Cont'd)
  - Protrusion Gages and Gaging for Flat Head Screws Z-130.02
  - Round Head
    - Recessed
      - Header Point
        - Steel C-650.15
    - Slotted
      - Header Point
        - Brass C-600.12
        - Steel C-600.11
      - Sheared Point
        - Brass C-600.02
        - Steel C-600.01
- Set
  - General Specifications. C-950.01
  - Headless
    - Cone Point C-710.51,.52
    - Cup Point. C-710.21,.22
    - Dog Point. C-710.51,.52
    - Oval (Round) Point C-710.21,.22
  - Hexagon Socket
    - Cup Point. C-720.21,.22
    - Dog Point. C-720.61,.62
    - Oval Point C-720.21,.22
- Tapping
  - Fillister Head
    - Recessed
      - Type A Point. D-113.01
      - Type B and BP Point D-113.02
      - Type C Point. D-113.03
      - Type D, F, and G Point. D-113.04
    - Slotted
      - Type A Point. D-111.01
      - Type B and BP Point D-111.02
      - Type C Point. D-111.03
      - Type D, F, and G Point. D-111.04
  - Flat Head
    - Protrusion Gages and Gaging for Flat Head Screws. Z-130.02
    - Recessed
      - Type A Point. D-123.01
      - Type B and BP Point D-123.02
      - Type C Point. D-123.03
      - Type D, F, and G Point. D-123.04
    - Slotted
      - Type A Point. D-121.01
      - Type B and BP Point D-121.02
      - Type C Point. D-121.03
      - Type D, F, and G Point. D-121.04
  - Flat Trim Head
    - Recessed
      - Type A Point. D-123.05
      - Type C Point. D-123.06; D-123.07
      - Type D, F, and G Point. . D-123.08; D-123.09
  - General Specifications. D-950.01
  - Hexagon Head
    - Slotted
      - Type A Point. D-131.01
      - Type B and BP Point D-131.02
      - Type C Point. D-131.03
      - Type D, F, and G Point. D-131.04
    - Not Slotted
      - Type A Point. D-130.01
      - Type B and BP Point D-130.02
      - Type C Point. D-130.03
      - Type D, F, and G Point. D-130.04
  - Hexagon Washer and Slotted Hexagon Washer Head
    - Type A Point D-132.01
    - Type B and BP Point. D-132.02
    - Type C Point D-132.03
    - Type D, F, and G Point D-132.04
  - Hole Sizes. D-950.09
  - Oval Head
    - Recessed
      - Type A Point. D-143.01
      - Type B and BP Point D-143.02
      - Type C Point. D-143.03
      - Type D, F, and G Point. D-143.04
    - Slotted
      - Type A Point. D-141.01
      - Type B and BP Point D-141.02
      - Type C Point. D-141.03
      - Type D, F, and G Point D-141.04
  - Oval Trim Head
    - Recessed
      - Type A Point. D-143.05
      - Type C Point. D-143.06; D-143.07
      - Type D, F, and G Point. . D-143.08; D-143.09
  - Pan Head
    - Recessed
      - Type A Point. D-153.01
      - Type B and BP Point D-153.02
      - Type C Point. D-153.03
      - Type D, F, and G Point. D-153.04
    - Slotted
      - Type A Point. D-151.01
      - Type B and BP Point D-151.02
      - Type C Point. D-151.03
      - Type D, F, and G Point. D-151.04

SCREWS (Cont'd)
- Tapping (Cont'd)
  - Penetration Gages and Gaging for Recessed Head Screws Z-130.01
  - Round Head
    - Recessed
      - Type A Point D-163.01
      - Type B and BP Point. D-163.02
      - Type C Point D-163.03
      - Type D, F, and G Point D-163.04
    - Slotted
      - Type A Point D-161.01
      - Type B and BP Point. D-161.02
      - Type C Point D-161.03
      - Type D, F, and G Point D-161.04
- Wood
  - Flat Head D-321.01
  - General Specifications. D-950.01
  - Hole Sizes. D-950.13
  - Oval Head D-341.02
  - Protrusion Gages and Gaging for Flat Head Screws Z-130.02
  - Round Head. D-361.01

SCREW AND WASHER ASSEMBLIES
- Fillister
  - Recessed
    - Header Point
      - Internal Tooth Lock Washer C-153.13
      - Spring Lock Washer C-151.12
  - Slotted
    - Header Point
      - Internal Tooth Lock Washer C-103.12
      - Spring Lock Washer C-101.11
- General Specifications C-950.01
- Header Point Specifications. C-950.02
- Hexagon Head
  - Header Point
    - External Tooth Lock Washer. C-312.14
    - Spring Lock Washer. C-311.13
- Hexagon Washer Head
  - Header Point
    - External Tooth Lock Washer. C-361.11
- Oval Head
  - Recessed
    - Header Point
      - External Tooth Lock Washer C-452.15
  - Slotted
    - Header Point
      - External Tooth Lock Washer C-402.13
- Pan Head
  - Recessed
    - Header Point
      - External Tooth Lock Washer C-552.18
      - Spring Lock Washer C-551.17
  - Slotted
    - Header Point
      - External Tooth Lock Washer C-502.15
      - Spring Lock Washer C-501.14
- Round Head
  - Recessed
    - Header Point
      - External Tooth Lock Washer C-652.17
      - Spring Lock Washer C-651.16
  - Slotted
    - Header Point
      - External Tooth Lock Washer C-602.14
      - Spring Lock Washer C-601.13

SCREW THREADS
- General
  - Classes Z-140.02
  - Designation Z-140.05
  - Introduction. Z-140.01
  - Selection Z-140.02
  - Terminology and Symbols Z-160.01
  - Thread Form and Formulas. Z-161.01
    - Data. Z-161.02
- Special Series
  - Allowances and Tolerances
    - Formulas and Tables Z-166.02
      - Allowances for External Threads. . . Z-166.03
      - Major Diameter Tolerances for External Threads Z-166.03
      - Minor Diameter Tolerances for Internal Threads Z-166.20
      - Pitch Diameter Tolerances. Z-166.04
  - Internal Thread Minor Diameter Tolerances . . Z-167.02
  - Limiting Dimensions (Tables). Z-152.01
    - Formulas. Z-165.01
    - Outline Guide for Determination of Limiting Dimensions Z-165.03
    - Recommended Hole Size Limits Before Threading Z-168.12
- Standard Series
  - Allowances and Tolerances Z-164.07
    - Formulas and Tables Z-164.02
      - Increments in Pitch Diameter Tolerances Z-164.05

INDEX

SCREW THREADS (Cont'd)
- Standard Series (Cont'd)
  - Basic Dimensions Z-162.02
  - Internal Thread Minor Diameter Tolerances . . . Z-167.02
  - Limiting Dimensions (Tables) Z-150.01
    - Formulas and Tables Z-163.02
  - Recommended Hole Size Limits Before Threading . Z-168.12

SEALS
- "O" Ring L-600.01; L-600.02
  - General Specifications L-950.11

STUDS
- Full Body Diameter B-500.01
- General Specifications B-950.01
- Wire Size Body B-500.03

TACKS
- Gimp H-11
- Lace H-10
- Lining H-11
- Swede Upholstering H-10

TUBE FITTINGS
- Flared Tube
  - Connectors
    - Flare To External Pipe L-11
    - Flare To Internal Pipe L-11
  - Elbows - 90° L-12
  - Unions - 90° L-13
  - General Specifications L-103
  - Nuts
    - Long L-17
    - Short L-17
  - Tees
    - Two Way L-14
    - Two Way - 90° L-14
    - Three Way L-13
  - Unions L-12

TUBE FITTINGS (Cont'd)
- Inverted Flared Tube
  - Heavy Series
    - Connectors
      - External Pipe Thread L-23
      - Internal Pipe Thread L-23
    - Elbows
      - 45° L-21
      - 90° L-22
    - General Specifications L-103
    - Tees
      - Two Way - External Pipe Thread L-24
      - Two Way - Internal Pipe Thread L-18
      - Two Way - 90° External Pipe Thread . . L-19
      - Three Way L-20
    - Unions L-25
  - Standard Series
    - Connectors
      - Internal To External Pipe Thread . . . L-9
      - Internal To External Pipe Thread . . . L-10
    - Elbows - 90° L-16
    - General Specifications L-103
    - Nuts L-9
    - Tees
      - Two Way L-15
    - Unions L-10

TUBING CLIPS K-7; K-8
- General Specifications K-101

WASHERS
- Finishing
  - Countersunk
    - Flush F-300.01
    - Hollow F-300.01
- Flat F-100.01
- General Specifications F-950.01
- Spring Lock F-201.01; F-201.02
  - Trapezoidal F-200.02
- Tooth Lock
  - External F-210.01
  - External Countersunk F-210.01
  - Internal F-220.02

- o -

FORD MOTOR COMPANY
STANDARD PARTS

INDEX

THE TWO NUMBERS AT THE TOP OF THE NO. COLUMN ARE THE FIRST DIGITS OF THE FIVE DIGIT NUMBER AND FOLLOWING NUMBERS IN THE COLUMN ARE THE LAST THREE DIGITS OF THE FIVE DIGIT NUMBER.

No.	Page	No.	Page	No.	Page	No.	Page	No.	Page	No.	Page	No.	Page	No.	Page	No.	Page	No.	Page
20		20		20		20		20		20		20		20		20		20	
000		100		200		300	B-201.01	400		500		600		700		800		900	B-201.03
001		101		201		301	B-201.01	401		501		601		701		801		901	B-201.03
002		102		202		302	B-201.01	402		502		602		702		802		902	
003		103		203		303	B-201.01	403		503		603		703		803		903	
004		104		204		304		404	B-201.01	504	B-201.01	604		704		804		904	
005		105		205		305		405	B-201.01	505	B-201.01	605		705		805		905	
006		106		206		306		406	B-201.01	506	B-201.01	606		706		806		906	
007		107		207		307		407	B-201.01	507	B-201.01	607		707		807		907	
008		108		208		308	B-201.01	408	B-201.01	508	B-201.01	608		708		808		908	B-201.03
009		109		209		309	B-201.01	409	B-201.01	509	B-201.01	609		709		809		909	B-201.03
010		110		210		310	B-201.01	410	B-201.01	510	B-201.01	610		710		810		910	
011		111		211		311	B-201.01	411	B-201.01	511	B-201.01	611		711		811		911	
012		112		212		312	B-201.01	412	B-201.01	512	B-201.01	612		712		812		912	
013		113		213		313	B-201.01	413	B-201.01	513	B-201.01	613		713		813		913	
014		114		214		314	B-201.01	414		514	B-201.01	614		714		814		914	
015		115		215		315	B-201.01	415		515	B-201.01	615		715		815		915	
016		116		216		316		416		516	B-201.01	616		716		816		916	
017		117		217		317		417		517	B-201.01	617		717		817		917	
018		118		218		318		418		518	B-201.01	618		718		818		918	
019		119		219		319		419		519	B-201.01	619		719		819		919	
020		120		220		320		420		520	B-201.01	620		720		820		920	B-201.03
021		121		221		321		421		521	B-201.01	621		721		821		921	B-201.03
022		122		222		322		422		522	B-201.01	622		722		822		922	
023		123		223		323		423		523	B-201.01	623		723		823		923	
024		124		224		324	B-201.01	424	B-201.01	524	B-201.01	624		724		824		924	
025		125		225		325	B-201.01	425	B-201.01	525	B-201.01	625		725		825		925	
026		126		226		326	B-201.01	426	B-201.01	526	B-201.01	626		726		826		926	
027		127		227		327	B-201.01	427	B-201.01	527	B-201.01	627		727		827		927	
028		128		228		328	B-201.01	428	B-201.01	528	B-201.01	628		728		828		928	
029		129		229		329	B-201.01	429	B-201.01	529	B-201.01	629		729		829		929	
030		130		230		330	B-201.01	430	B-201.01	530	B-201.01	630		730		830		930	
031		131		231		331	B-201.01	431	B-201.01	531	B-201.01	631		731		831		931	
032		132		232		332	B-201.01	432	B-201.01	532	B-201.01	632		732		832		932	
033		133		233		333	B-201.01	433	B-201.01	533	B-201.01	633		733		833		933	
034		134		234		334		434		534	B-201.01	634		734		834		934	
035		135		235		335		435		535	B-201.01	635		735		835		935	
036		136		236		336		436		536	B-201.01	636		736		836		936	B-201.03
037		137		237		337		437		537	B-201.01	637		737		837		937	B-201.03
038		138		238		338		438		538	B-201.01	638		738		838		938	
039		139		239		339		439		539	B-201.01	639		739		839		939	
040		140		240		340		440		540	B-201.01	640		740		840		940	
041		141		241		341		441		541	B-201.01	641		741		841		941	
042		142		242		342		442		542	B-201.01	642		742		842		942	
043		143		243		343		443		543	B-201.01	643		743		843		943	
044		144		244		344	B-201.01	444	B-201.01	544	B-201.01	644		744		844		944	
045		145		245		345	B-201.01	445	B-201.01	545	B-201.01	645		745		845		945	
046		146		246		346	B-201.01	446	B-201.01	546	B-201.01	646		746		846		946	
047		147		247		347	B-201.01	447	B-201.01	547	B-201.01	647		747		847		947	
048		148		248		348	B-201.01	448	B-201.01	548	B-201.01	648		748		848		948	
049		149		249		349	B-201.01	449	B-201.01	549	B-201.01	649		749		849		949	
050		150		250		350	B-201.01	450	B-201.01	550	B-201.01	650		750		850		950	
051		151		251		351	B-201.01	451	B-201.01	551	B-201.01	651		751		851		951	
052		152		252		352	B-201.01	452	B-201.01	552	B-201.01	652		752		852		952	
053		153		253		353	B-201.01	453	B-201.01	553	B-201.01	653		753		853		953	
054		154		254		354		454		554	B-201.01	654		754		854		954	B-201.03
055		155		255		355		455		555	B-201.01	655		755		855		955	B-201.03
056		156		256		356		456		556	B-201.01	656		756		856		956	
057		157		257		357		457		557	B-201.01	657		757		857		957	
058		158		258		358		458		558	B-201.01	658		758		858		958	
059		159		259		359		459		559	B-201.01	659		759		859		959	
060		160		260		360		460		560	B-201.01	660		760		860		960	
061		161		261		361		461		561	B-201.01	661		761		861		961	
062		162		262		362		462		562	B-201.01	662		762		862		962	
063		163		263		363		463		563	B-201.01	663		763		863		963	
064		164		264		364	B-201.01	464	B-201.01	564		664		764		864		964	
065		165		265		365	B-201.01	465	B-201.01	565		665		765		865		965	
066		166		266		366	B-201.01	466	B-201.01	566		666		766		866		966	
067		167		267		367	B-201.01	467	B-201.01	567		667		767		867		967	
068		168		268		368	B-201.01	468	B-201.01	568		668		768		868		968	
069		169		269		369	B-201.01	469	B-201.01	569		669		769		869		969	
070		170		270		370	B-201.01	470	B-201.01	570		670		770		870		970	
071		171		271		371	B-201.01	471	B-201.01	571		671		771		871		971	
072		172		272		372	B-201.01	472	B-201.01	572		672		772		872		972	B-201.03
073		173		273		373	B-201.01	473	B-201.01	573		673		773		873		973	B-201.03
074		174		274		374		474		574		674		774		874		974	
075		175		275		375		475		575		675		775		875		975	
076		176		276		376		476		576		676		776		876		976	
077		177		277		377		477		577		677		777		877		977	
078		178		278		378		478		578		678		778		878		978	
079		179		279		379		479		579		679		779		879		979	
080		180		280		380		480		580		680		780		880		980	
081		181		281		381		481		581		681		781		881		981	
082		182		282		382		482		582		682		782		882		982	
083		183		283		383		483		583		683		783		883		983	
084		184		284		384	B-201.01	484	B-201.01	584		684		784		884		984	
085		185		285		385	B-201.01	485	B-201.01	585		685		785		885		985	
086		186		286		386	B-201.01	486	B-201.01	586		686		786		886		986	
087		187		287		387	B-201.01	487	B-201.01	587		687		787		887		987	
088		188		288		388	B-201.01	488	B-201.01	588		688		788		888		988	
089		189		289		389	B-201.01	489	B-201.01	589		689		789		889		989	
090		190		290		390	B-201.01	490	B-201.01	590		690		790		890		990	B-201.03
091		191		291		391	B-201.01	491	B-201.01	591		691		791		891		991	B-201.03
092		192		292		392	B-201.01	492	B-201.01	592		692		792		892		992	
093		193		293		393	B-201.01	493	B-201.01	593		693		793		893		993	
094		194		294		394		494		594		694		794		894		994	
095		195		295		395		495		595		695		795		895		995	
096		196		296		396		496		596		696		796		896		996	
097		197		297		397		497		597		697		797		897		997	
098		198		298		398		498		598		698		798		898		998	
099		199		299		399		499		599		699		799		899		999	

FORD MOTOR COMPANY
STANDARD PARTS

INDEX

THE TWO NUMBERS AT THE TOP OF THE NO. COLUMN ARE THE FIRST DIGITS OF THE FIVE DIGIT NUMBER AND FOLLOWING NUMBERS IN THE COLUMN ARE THE LAST THREE DIGITS OF THE FIVE DIGIT NUMBER.

No.	Page	No.	Page	No.	Page	No.	Page	No.	Page	No.	Page	No.	Page	No.	Page	No.	Page	No.	Page
21		21		21		21		21		21		21		21		21		21	
000		100		200		300		400		500		600		700		800		900	
001		101		201		301		401		501		601		701		801		901	
002		102		202		302		402		502		602		702		802		902	
003		103		203		303		403		503		603		703		803		903	
004		104		204		304		404		504		604		704		804		904	
005		105		205		305		405		505		605		705		805		905	
006		106		206		306		406		506		606		706		806		906	
007		107	B-201.03	207		307		407		507		607		707		807		907	
008	B-201.03	108	B-201.03	208		308		408		508		608		708		808		908	
009	B-201.03	109		209		309		409		509		609		709		809		909	
010		110		210		310		410		510		610		710		810		910	
011		111		211		311		411		511		611		711		811		911	
012		112		212		312		412		512		612		712		812		912	
013		113		213		313		413		513		613		713		813		913	
014		114		214		314		414		514		614		714		814		914	
015		115		215		315		415		515		615		715		815		915	
016		116	B-201.03	216		316		416		516		616		716		816		916	
017		117	B-201.03	217		317		417		517		617		717		817		917	
018		118		218		318		418		518		618		718		818		918	
019		119		219		319		419		519		619		719		819		919	
020		120		220		320		420		520		620		720		820		920	
021		121		221		321		421		521		621		721		821		921	
022		122		222		322		422		522		622		722		822		922	
023		123		223		323		423		523		623		723		823		923	
024		124		224		324		424		524		624		724		824		924	
025		125	B-201.03	225		325		425		525		625		725		825		925	
026	B-201.03	126	B-201.03	226		326		426		526		626		726		826		926	
027	B-201.03	127		227		327		427		527		627		727		827		927	
028		128		228		328		428		528		628		728		828		928	
029		129		229		329		429		529		629		729		829		929	
030		130		230		330		430		530		630		730		830		930	
031		131		231		331		431		531		631		731		831		931	
032		132		232		332		432		532		632		732		832		932	
033		133		233		333		433		533		633		733		833		933	
034		134	B-201.03	234		334		434		534		634		734		834		934	
035		135	B-201.03	235		335		435		535		635		735		835		935	
036		136		236		336		436		536		636		736		836		936	
037		137		237		337		437		537		637		737		837		937	
038		138		238		338		438		538		638		738		838		938	
039		139		239		339		439		539		639		739		839		939	
040		140		240		340		440		540		640		740		840		940	
041		141		241		341		441		541		641		741		841		941	
042		142		242		342		442		542		642		742		842		942	
043		143	B-201.03	243		343		443		543		643		743		843		943	
044	B-201.03	144	B-201.03	244		344		444		544		644		744		844		944	
045	B-201.03	145		245		345		445		545		645		745		845		945	
046		146		246		346		446		546		646		746		846		946	
047		147		247		347		447		547		647		747		847		947	
048		148		248		348		448		548		648		748		848		948	
049		149		249		349		449		549		649		749		849		949	
050		150		250		350		450		550		650		750		850		950	
051		151		251		351		451		551		651		751		851		951	
052		152		252		352		452		552		652		752		852		952	
053	B-201.03	153		253		353		453		553		653		753		853		953	
054	B-201.03	154		254		354		454		554		654		754		854		954	
055		155		255		355		455		555		655		755		855		955	
056		156		256		356		456		556		656		756		856		956	
057		157		257		357		457		557		657		757		857		957	
058		158		258		358		458		558		658		758		858		958	
059		159		259		359		459		559		659		759		859		959	
060		160		260		360		460		560		660		760		860		960	
061		161		261		361		461		561		661		761		861		961	
062	B-201.03	162		262		362		462		562		662		762		862		962	
063	B-201.03	163		263		363		463		563		663		763		863		963	
064		164		264		364		464		564		664		764		864		964	
065		165		265		365		465		565		665		765		865		965	
066		166		266		366		466		566		666		766		866		966	
067		167		267		367		467		567		667		767		867		967	
068		168		268		368		468		568		668		768		868		968	
069		169		269		369		469		569		669		769		869		969	
070		170		270		370		470		570		670		770		870		970	
071	B-201.03	171		271		371		471		571		671		771		871		971	
072	B-201.03	172		272		372		472		572		672		772		872		972	
073		173		273		373		473		573		673		773		873		973	
074		174		274		374		474		574		674		774		874		974	
075		175		275		375		475		575		675		775		875		975	
076		176		276		376		476		576		676		776		876		976	
077		177		277		377		477		577		677		777		877		977	
078		178		278		378		478		578		678		778		878		978	
079		179		279		379		479		579		679		779		879		979	
080	B-201.03	180		280		380		480		580		680		780		880		980	
081	B-201.03	181		281		381		481		581		681		781		881		981	
082		182		282		382		482		582		682		782		882		982	
083		183		283		383		483		583		683		783		883		983	
084		184		284		384		484		584		684		784		884		984	
085		185		285		385		485		585		685		785		885		985	
086		186		286		386		486		586		686		786		886		986	
087		187		287		387		487		587		687		787		887		987	
088		188		288		388		488		588		688		788		888		988	
089	B-201.03	189		289		389		489		589		689		789		889		989	
090	B-201.03	190		290		390		490		590		690		790		890		990	
091		191		291		391		491		591		691		791		891		991	
092		192		292		392		492		592		692		792		892		992	
093		193		293		393		493		593		693		793		893		993	
094		194		294		394		494		594		694		794		894		994	
095		195		295		395		495		595		695		795		895		995	
096		196		296		396		496		596		696		796		896		996	
097		197		297		397		497		597		697		797		897		997	
098	B-201.03	198		298		398		498		598		698		798		898		998	
099	B-201.03	199		299		399		499		599		699		799		899		999	

FORD MOTOR COMPANY
STANDARD PARTS

INDEX

THE TWO NUMBERS AT THE TOP OF THE NO. COLUMN ARE THE FIRST DIGITS OF THE FIVE DIGIT NUMBER AND FOLLOWING NUMBERS IN THE COLUMN ARE THE LAST THREE DIGITS OF THE FIVE DIGIT NUMBER.

No.	Page	No.	Page	No.	Page	No.	Page	No.	Page	No.	Page	No.	Page	No.	Page	No.	Page	No.	Page
22		22		22		22		22		22		22		22		22		22	
000		100		200		300		400		500		600		700		800		900	
001		101		201		301		401		501		601		701		801		901	
002		102		202		302		402		502		602		702		802		902	
003		103		203		303		403		503		603		703		803		903	
004		104		204		304		404		504		604		704		804		904	
005		105		205		305		405		505		605		705		805		905	
006		106		206		306		406		506		606		706		806		906	
007		107		207		307		407		507		607		707		807		907	
008		108		208		308		408		508		608		708		808		908	
009		109		209		309		409		509		609		709		809		909	
010		110		210		310		410		510		610		710		810		910	
011		111		211		311		411		511		611		711		811		911	
012		112		212		312		412		512		612		712		812		912	
013		113		213		313		413		513		613		713		813		913	
014		114		214		314		414		514		614		714		814		914	
015		115		215		315		415		515		615		715		815		915	
016		116		216		316		416		516		616		716		816		916	
017		117		217		317		417		517		617		717		817		917	
018		118		218		318		418		518		618		718		818		918	
019		119		219		319		419		519		619		719		819		919	
020		120		220		320		420		520		620		720		820		920	
021		121		221		321		421		521		621		721		821		921	
022		122		222		322		422		522		622		722		822		922	
023		123		223		323		423		523		623		723		823		923	
024		124		224		324		424		524		624		724		824		924	
025		125		225		325		425		525		625		725		825		925	
026		126		226		326		426		526		626		726		826		926	
027		127		227		327		427		527		627		727		827		927	
028		128		228		328		428		528		628		728		828		928	
029		129		229		329		429		529		629		729		829		929	
030		130		230		330		430		530		630		730		830		930	
031		131		231		331		431		531		631		731		831		931	
032		132		232		332		432		532		632		732		832		932	
033		133		233		333		433		533		633		733		833		933	
034		134		234		334		434		534		634		734		834		934	
035		135		235		335		435		535		635		735		835		935	
036		136		236		336		436		536		636		736		836		936	
037		137		237		337		437		537		637		737		837		937	
038		138		238		338		438		538		638		738		838		938	
039		139		239		339		439		539		639		739		839		939	
040		140		240		340		440		540		640		740		840		940	
041		141		241		341		441		541		641		741		841		941	
042		142		242		342		442		542		642		742		842		942	
043		143		243		343		443		543		643		743		843		943	
044		144		244		344		444		544		644		744		844		944	
045		145		245		345		445		545		645		745		845		945	
046		146		246		346		446		546		646		746		846		946	
047		147		247		347		447		547		647		747		847		947	
048		148		248		348		448		548		648		748		848		948	
049		149		249		349		449		549		649		749		849		949	
050		150		250		350		450		550		650		750		850		950	
051		151		251		351		451		551		651		751		851		951	
052		152		252		352		452		552		652		752		852		952	
053		153		253		353		453		553		653		753		853		953	
054		154		254		354		454		554		654		754		854		954	
055		155		255		355		455		555		655		755		855		955	
056		156		256		356		456		556		656		756		856		956	
057		157		257		357		457		557		657		757		857		957	
058		158		258		358		458		558		658		758		858		958	
059		159		259		359		459		559		659		759		859		959	
060		160		260		360		460		560		660		760		860		960	
061		161		261		361		461		561		661		761		861		961	
062		162		262		362		462		562		662		762		862		962	
063		163		263		363		463		563		663		763		863		963	
064		164		264		364		464		564		664		764		864		964	
065		165		265		365		465		565		665		765		865		965	
066		166		266		366		466		566		666		766		866		966	
067		167		267		367		467		567		667		767		867		967	
068		168		268		368		468		568		668		768		868		968	
069		169		269		369		469		569		669		769		869		969	
070		170		270		370		470		570		670		770		870		970	
071		171		271		371		471		571		671		771		871		971	
072		172		272		372		472		572		672		772		872		972	
073		173		273		373		473		573		673		773		873		973	
074		174		274		374		474		574		674		774		874		974	
075		175		275		375		475		575		675		775		875		975	
076		176		276		376		476		576		676		776		876		976	
077		177		277		377		477		577		677		777		877		977	
078		178		278		378		478		578		678		778		878		978	
079		179		279		379		479		579		679		779		879		979	
080		180		280		380		480		580		680		780		880		980	B-301.01
081		181		281		381		481		581		681		781		881		981	B-301.01
082		182		282		382		482		582		682		782		882		982	B-301.01
083		183		283		383		483		583		683		783		883		983	B-301.01
084		184		284		384		484		584		684		784		884		984	B-301.01
085		185		285		385		485		585		685		785		885		985	B-301.01
086		186		286		386		486		586		686		786		886		986	B-301.01
087		187		287		387		487		587		687		787		887		987	B-301.01
088		188		288		388		488		588		688		788		888		988	B-301.01
089		189		289		389		489		589		689		789		889		989	B-301.01
090		190		290		390		490		590		690		790		890		990	B-301.01
091		191		291		391		491		591		691		791		891		991	B-301.01
092		192		292		392		492		592		692		792		892		992	B-301.01
093		193		293		393		493		593		693		793		893		993	
094		194		294		394		494		594		694		794		894		994	B-301.01
095		195		295		395		495		595		695		795		895		995	B-301.01
096		196		296		396		496		596		696		796		896		996	B-301.01
097		197		297		397		497		597		697		797		897		997	B-301.01
098		198		298		398		498		598		698		798		898		998	B-301.01
099		199		299		399		499		599		699		799		899		999	

FORD MOTOR COMPANY
STANDARD PARTS

INDEX

THE TWO NUMBERS AT THE TOP OF THE NO. COLUMN ARE THE FIRST DIGITS OF THE FIVE DIGIT NUMBER AND FOLLOWING NUMBERS IN THE COLUMN ARE THE LAST THREE DIGITS OF THE FIVE DIGIT NUMBER.

No.	Page	No.	Page	No.	Page	No.	Page	No.	Page	No.	Page	No.	Page	No.	Page	No.	Page	No.	Page
23		23		23		23		23		23		23		23		23		23	
000	B-301.01	100	B-301.01	200		300		400	B-400.02	500	B-400.02	600	B-400.02	700	B-400.02	800	B-400.02	900	B-450.01
001	B-301.01	101		201		301		401		501	B-400.02	601	B-400.02	701		801	B-400.02	901	B-450.01
002	B-301.01	102	B-301.01	202		302		402		502	B-400.02	602	B-400.02	702		802		902	B-450.01
003	B-301.01	103	B-301.01	203		303		403	B-400.02	503	B-400.02	603	B-400.02	703	B-400.02	803		903	B-450.01
004	B-301.01	104	B-301.01	204		304		404	B-400.02	504	B-400.02	604	B-400.02	704	B-400.02	804	B-400.02	904	B-450.01
005		105	B-301.01	205		305		405	B-400.02	505	B-400.02	605	B-400.02	705	B-400.02	805	B-400.02	905	B-450.01
006	B-301.01	106	B-301.01	206		306		406	B-400.02	506		606	B-400.02	706	B-400.02	806	B-400.02	906	B-450.01
007	B-301.01	107	B-301.01	207		307		407	B-400.02	507		607	B-400.02	707	B-400.02	807	B-400.02	907	B-450.01
008	B-301.01	108	B-301.01	208		308		408	B-400.02	508	B-400.02	608	B-400.02	708	B-400.02	808	B-400.02	908	B-450.01
009	B-301.01	109		209		309		409	B-400.02	509	B-400.02	609	B-400.02	709	B-400.02	809	B-400.02	909	B-450.01
010	B-301.01	110	B-301.01	210		310		410	B-400.02	510	B-400.02	610	B-400.02	710	B-400.02	810	B-400.02	910	B-450.01
011	B-301.01	111	B-301.01	211		311		411	B-400.02	511	B-400.02	611		711	B-400.02	811	B-400.02	911	B-450.01
012	B-301.01	112	B-301.01	212		312		412	B-400.02	512	B-400.02	612		712	B-400.02	812	B-400.02	912	B-450.01
013		113	B-301.01	213		313		413	B-400.02	513	B-400.02	613	B-400.02	713	B-400.02	813	B-400.02	913	B-450.01
014	B-301.01	114	B-301.01	214		314		414	B-400.02	514	B-400.02	614	B-400.02	714	B-400.02	814		914	B-450.01
015	B-301.01	115	B-301.01	215		315		415	B-400.02	515	B-400.02	615	B-400.02	715	B-400.02	815		915	B-450.01
016	B-301.01	116	B-301.01	216		316		416		516	B-400.02	616	B-400.02	716		816	B-400.02	916	B-450.01
017	B-301.01	117		217		317		417		517	B-400.02	617	B-400.02	717		817	B-400.02	917	B-450.01
018	B-301.01	118	B-301.01	218		318		418	B-400.02	518	B-400.02	618	B-400.02	718	B-400.02	818	B-400.02	918	B-450.01
019	B-301.01	119	B-301.01	219		319		419	B-400.02	519	B-400.02	619	B-400.02	719	B-400.02	819	B-400.02	919	B-450.01
020	B-301.01	120	B-301.01	220		320		420	B-400.02	520	B-400.02	620	B-400.02	720	B-400.02	820	B-400.02	920	B-450.01
021		121	B-301.01	221		321		421	B-400.02	521		621	B-400.02	721	B-400.02	821	B-400.02	921	B-450.01
022	B-301.01	122	B-301.01	222		322		422	B-400.02	522		622	B-400.02	722	B-400.02	822	B-400.02	922	B-450.01
023	B-301.01	123	B-301.01	223		323		423	B-400.02	523	B-400.02	623	B-400.02	723	B-400.02	823	B-400.02	923	B-450.01
024	B-301.01	124	B-301.01	224		324		424	B-400.02	524	B-400.02	624	B-400.02	724	B-400.02	824	B-400.02	924	B-450.01
025	B-301.01	125		225		325		425	B-400.02	525	B-400.02	625	B-400.02	725	B-400.02	825	B-400.02	925	B-450.01
026	B-301.01	126	B-301.01	226		326		426	B-400.02	526	B-400.02	626		726	B-400.02	826		926	B-450.01
027	B-301.01	127	B-301.01	227		327		427	B-400.02	527	B-400.02	627		727	B-400.02	827		927	B-450.01
028	B-301.01	128	B-301.01	228		328		428	B-400.02	528	B-400.02	628	B-400.02	728	B-400.02	828	B-400.02	928	B-450.01
029		129	B-301.01	229		329		429	B-400.02	529	B-400.02	629	B-400.02	729	B-400.02	829	B-400.02	929	B-450.01
030	B-301.01	130	B-301.01	230		330		430	B-400.02	530	B-400.02	630	B-400.02	730	B-400.02	830	B-400.02	930	B-450.01
031	B-301.01	131	B-301.01	231		331		431		531	B-400.02	631	B-400.02	731		831	B-400.02	931	B-450.01
032	B-301.01	132	B-301.01	232		332		432		532	B-400.02	632	B-400.02	732		832	B-400.02	932	B-450.01
033	B-301.01	133		233		333		433	B-400.02	533	B-400.02	633	B-400.02	733	B-400.02	833	B-400.02	933	B-450.01
034	B-301.01	134	B-301.01	234		334		434	B-400.02	534	B-400.02	634	B-400.02	734	B-400.02	834	B-400.02	934	B-450.01
035	B-301.01	135	B-301.01	235		335		435	B-400.02	535	B-400.02	635	B-400.02	735	B-400.02	835	B-400.02	935	B-450.01
036	B-301.01	136	B-301.01	236		336		436	B-400.02	536		636	B-400.02	736	B-400.02	836	B-400.02	936	B-450.01
037		137	B-301.01	237		337		437	B-400.02	537		637	B-400.02	737	B-400.02	837	B-400.02	937	B-450.01
038	B-301.01	138	B-301.01	238		338		438	B-400.02	538	B-400.02	638	B-400.02	738	B-400.02	838		938	B-450.01
039	B-301.01	139	B-301.01	239		339		439	B-400.02	539	B-400.02	639	B-400.02	739	B-400.02	839		939	B-450.01
040	B-301.01	140	B-301.01	240		340		440	B-400.02	540	B-400.02	640	B-400.02	740	B-400.02	840	B-400.02	940	B-450.01
041	B-301.01	141		241		341		441	B-400.02	541	B-400.02	641		741	B-400.02	841	B-400.02	941	B-450.01
042	B-301.01	142	B-301.01	242		342		442	B-400.02	542	B-400.02	642		742	B-400.02	842	B-400.02	942	B-450.01
043	B-301.01	143	B-301.01	243		343		443	B-400.02	543	B-400.02	643	B-400.02	743	B-400.02	843	B-400.02	943	B-450.01
044	B-301.01	144	B-301.01	244		344		444	B-400.02	544	B-400.02	644	B-400.02	744	B-400.02	844	B-400.02	944	B-450.01
045		145	B-301.01	245		345		445	B-400.02	545	B-400.02	645	B-400.02	745	B-400.02	845	B-400.02	945	B-450.01
046	B-301.01	146	B-301.01	246		346		446		546	B-400.02	646	B-400.02	746		846	B-400.02	946	B-450.01
047	B-301.01	147	B-301.01	247		347		447		547	B-400.02	647	B-400.02	747		847	B-400.02	947	B-450.01
048	B-301.01	148	B-301.01	248		348		448	B-400.02	548	B-400.02	648	B-400.02	748	B-400.02	848	B-400.02	948	B-450.01
049	B-301.01	149		249		349		449	B-400.02	549	B-400.02	649	B-400.02	749	B-400.02	849	B-400.02	949	B-450.01
050	B-301.01	150	B-301.01	250		350	B-400.02	450	B-400.02	550	B-400.02	650	B-400.02	750	B-400.02	850		950	B-450.01
051	B-301.01	151	B-301.01	251		351	B-400.02	451	B-400.02	551		651	B-400.02	751	B-400.02	851		951	B-450.01
052	B-301.01	152	B-301.01	252		352	B-400.02	452	B-400.02	552		652	B-400.02	752	B-400.02	852	B-400.02	952	B-450.01
053		153	B-301.01	253		353	B-400.02	453	B-400.02	553	B-400.02	653	B-400.02	753	B-400.02	853	B-400.02	953	B-450.01
054	B-301.01	154	B-301.01	254		354	B-400.02	454	B-400.02	554	B-400.02	654	B-400.02	754	B-400.02	854	B-400.02	954	B-450.01
055	B-301.01	155	B-301.01	255		355		455	B-400.02	555	B-400.02	655	B-400.02	755	B-400.02	855	B-400.02	955	B-450.01
056	B-301.01	156	B-301.01	256		356		456	B-400.02	556	B-400.02	656		756	B-400.02	856	B-400.02	956	B-450.01
057	B-301.01	157		257		357		457	B-400.02	557	B-400.02	657		757	B-400.02	857	B-400.02	957	B-450.01
058	B-301.01	158	B-301.01	258		358		458	B-400.02	558	B-400.02	658	B-400.02	758	B-400.02	858	B-400.02	958	B-450.01
059	B-301.01	159	B-301.01	259		359		459	B-400.02	559	B-400.02	659	B-400.02	759	B-400.02	859	B-400.02	959	B-450.01
060	B-301.01	160	B-301.01	260		360		460	B-400.02	560	B-400.02	660	B-400.02	760		860		960	B-450.01
061		161	B-301.01	261		361		461		561	B-400.02	661	B-400.02	761		861		961	B-450.01
062	B-301.01	162	B-301.01	262		362		462		562	B-400.02	662	B-400.02	762	B-400.02	862	B-400.02	962	B-450.01
063	B-301.01	163	B-301.01	263		363		463	B-400.02	563	B-400.02	663	B-400.02	763	B-400.02	863	B-400.02	963	B-450.01
064	B-301.01	164	B-301.01	264		364	B-400.02	464	B-400.02	564	B-400.02	664	B-400.02	764	B-400.02	864	B-400.02	964	B-450.01
065	B-301.01	165		265		365	B-400.02	465	B-400.02	565	B-400.02	665	B-400.02	765	B-400.02	865	B-400.02	965	B-450.01
066	B-301.01	166	B-301.01	266		366	B-400.02	466	B-400.02	566		666	B-400.02	766	B-400.02	866	B-400.02	966	B-450.01
067	B-301.01	167	B-301.01	267		367	B-400.02	467	B-400.02	567		667	B-400.02	767	B-400.02	867	B-400.02	967	B-450.01
068	B-301.01	168	B-301.01	268		368	B-400.02	468	B-400.02	568	B-400.02	668	B-400.02	768	B-400.02	868	B-400.02	968	B-450.01
069		169	B-301.01	269		369	B-400.02	469	B-400.02	569	B-400.02	669	B-400.02	769	B-400.02	879	B-400.02	969	B-450.01
070	B-301.01	170	B-301.01	270		370	B-400.02	470	B-400.02	570	B-400.02	670	B-400.02	770	B-400.02	870		970	B-450.01
071	B-301.01	171	B-301.01	271		371	B-400.02	471	B-400.02	571	B-400.02	671		771	B-400.02	871		971	B-450.01
072	B-301.01	172	B-301.01	272		372	B-400.02	472	B-400.02	572	B-400.02	672		772	B-400.02	872	B-400.02	972	B-450.01
073	B-301.01	173		273		373	B-400.02	473	B-400.02	573	B-400.02	673	B-400.02	773	B-400.02	873	B-400.02	973	B-450.01
074	B-301.01	174	B-301.01	274		374	B-400.02	474	B-400.02	574	B-400.02	674	B-400.02	774		874	B-400.02	974	B-450.01
075	B-301.01	175	B-301.01	275		375	B-400.02	475	B-400.02	575	B-400.02	675	B-400.02	775		875	B-400.02	975	B-450.01
076	B-301.01	176	B-301.01	276		376	B-400.02	476		576	B-400.02	676	B-400.02	776	B-400.02	876	B-400.02	976	B-450.01
077		177	B-301.01	277		377	B-400.02	477		577	B-400.02	677	B-400.02	777	B-400.02	877	B-400.02	977	B-450.01
078	B-301.01	178	B-301.01	278		378	B-400.02	478	B-400.02	578	B-400.02	678	B-400.02	778	B-400.02	878	B-400.02	978	B-450.01
079	B-301.01	179	B-301.01	279		379	B-400.02	479	B-400.02	579	B-400.02	679	B-400.02	779	B-400.02	879	B-400.02	979	B-450.01
080	B-301.01	180	B-301.01	280		380	B-400.02	480	B-400.02	580	B-400.02	680	B-400.02	780	B-400.02	880		980	B-450.01
081	B-301.01	181		281		381	B-400.02	481	B-400.02	581		681	B-400.02	781	B-400.02	881		981	B-450.01
082	B-301.01	182	B-301.01	282		382	B-400.02	482	B-400.02	582		682	B-400.02	782	B-400.02	882	B-400.02	982	B-450.01
083	B-301.01	183	B-301.01	283		383	B-400.02	483	B-400.02	583	B-400.02	683	B-400.02	783	B-400.02	883	B-400.02	983	B-450.01
084	B-301.01	184		284		384	B-400.02	484	B-400.02	584	B-400.02	684	B-400.02	784	B-400.02	884		984	B-450.01
085		185		285		385	B-400.02	485	B-400.02	585	B-400.02	685	B-400.02	785	B-400.02	885		985	B-450.01
086	B-301.01	186		286		386		486	B-400.02	586	B-400.02	686		786	B-400.02	886		986	B-450.01
087	B-301.01	187		287		387		487	B-400.02	587	B-400.02	687		787	B-400.02	887		987	B-450.01
088	B-301.01	188		288		388	B-400.02	488	B-400.02	588	B-400.02	688	B-400.02	788		888		988	B-450.01
089	B-301.01	189		289		389	B-400.02	489	B-400.02	589	B-400.02	689	B-400.02	789		889		989	B-450.01
090	B-301.01	190		290		390	B-400.02	490	B-400.02	590	B-400.02	690	B-400.02	790	B-400.02	890		990	B-450.01
091	B-301.01	191		291		391	B-400.02	491		591	B-400.02	691	B-400.02	791	B-400.02	891		991	B-450.01
092	B-301.01	192		292		392	B-400.02	492		592	B-400.02	692	B-400.02	792	B-400.02	892		992	B-450.01
093		193		293		393	B-400.02	493	B-400.02	593	B-400.02	693	B-400.02	793	B-400.02	893		993	B-450.01
094	B-301.01	194		294		394	B-400.02	494	B-400.02	594	B-400.02	694	B-400.02	794	B-400.02	894		994	B-450.01
095	B-301.01	195		295		395	B-400.02	495	B-400.02	595	B-400.02	695	B-400.02	795	B-400.02	895		995	B-450.01
096	B-301.01	196		296		396	B-400.02	496	B-400.02	596		696	B-400.02	796	B-400.02	896		996	B-450.01
097	B-301.01	197		297		397	B-400.02	497	B-400.02	597		697	B-400.02	797	B-400.02	897		997	B-450.01
098	B-301.01	198		298		398	B-400.02	498	B-400.02	598	B-400.02	698	B-400.02	798	B-400.02	898		998	B-450.01
099	B-301.01	199		299		399	B-400.02	499	B-400.02	599	B-400.02	699	B-400.02	799	B-400.02	899		999	B-450.01

FORD MOTOR COMPANY
STANDARD PARTS

INDEX

THE TWO NUMBERS AT THE TOP OF THE NO. COLUMN ARE THE FIRST DIGITS OF THE FIVE DIGIT NUMBER AND FOLLOWING NUMBERS IN THE COLUMN ARE THE LAST THREE DIGITS OF THE FIVE DIGIT NUMBER.

No.	Page	No.	Page	No.	Page	No.	Page	No.	Page	No.	Page	No.	Page	No.	Page	No.	Page	No.	Page
24		24		24		24		24		24		24		24		24		24	
000	B-450.01	100	B-440.02	200	B-440.02	300		400		500		600	C-200.02	700	C-200.02	800	C-200.02	900	
001	B-450.01	101	B-440.02	201	B-440.02	301		401		501		601	C-200.02	701	C-200.02	801	C-200.02	901	
002	B-450.01	102	B-440.02	202	B-440.02	302		402		502		602	C-200.02	702	C-200.02	802	C-200.02	902	
003	B-450.01	103	B-440.02	203	B-440.02	303		403		503		603	C-200.02	703	C-200.02	803	C-200.02	903	
004	B-450.01	104	B-440.02	204	B-440.02	304		404		504		604	C-200.02	704	C-200.02	804	C-200.02	904	
005	B-450.01	105	B-440.02	205	B-440.02	305		405		505		605	C-200.02	705	C-200.02	805	C-200.02	905	
006	B-450.01	106	B-440.02	206		306		406		506		606	C-200.02	706	C-200.02	806	C-200.02	906	
007	B-450.01	107	B-440.02	207	B-440.02	307		407		507		607	C-200.02	707	C-200.02	807	C-200.02	907	
008	B-450.01	108	B-440.02	208	B-440.02	308		408		508		608	C-200.02	708	C-200.02	808	C-200.02	908	
009	B-450.01	109	B-440.02	209	B-440.02	309		409		509		609	C-200.02	709	C-200.02	809	C-200.02	909	
010	B-450.01	110	B-440.02	210	B-440.02	310		410		510		610	C-200.02	710	C-200.02	810	C-200.02	910	
011	B-450.01	111	B-440.02	211	B-440.02	311		411		511		611	C-200.02	711	C-200.02	811	C-200.02	911	
012	B-450.01	112	B-440.02	212	B-440.02	312		412		512		612	C-200.02	712	C-200.02	812	C-200.02	912	
013	B-450.01	113	B-440.02	213	B-440.02	313		413		513		613	C-200.02	713	C-200.02	813	C-200.02	913	
014	B-450.01	114	B-440.02	214		314		414		514		614	C-200.02	714	C-200.02	814	C-200.02	914	
015	B-450.01	115	B-440.02	215	B-440.02	315		415		515		615	C-200.02	715	C-200.02	815	C-200.02	915	
016	B-450.01	116	B-440.02	216	B-440.02	316		416		516		616	C-200.02	716	C-200.02	816	C-200.02	916	
017	B-450.01	117	B-440.02	217	B-440.02	317		417		517		617	C-200.02	717	C-200.02	817	C-200.02	917	
018	B-450.01	118	B-440.02	218	B-440.02	318		418		518		618	C-200.02	718	C-200.02	818	C-200.02	918	
019	B-450.01	119	B-440.02	219	B-440.02	319		419		519		619	C-200.02	719	C-200.02	819	C-200.02	919	
020	B-450.01	120	B-440.02	220	B-440.02	320		420		520		620	C-200.02	720	C-200.02	820	C-200.02	920	
021	B-450.01	121	B-440.02	221	B-440.02	321		421		521		621	C-200.02	721	C-200.02	821	C-200.02	921	
022	B-450.01	122	B-440.02	222		322		422		522		622	C-200.02	722	C-200.02	822	C-200.02	922	
023	B-450.01	123	B-440.02	223	B-440.02	323		423		523		623	C-200.02	723	C-200.02	823	C-200.02	923	
024	B-450.01	124	B-440.02	224	B-440.02	324		424		524		624	C-200.02	724	C-200.02	824	C-200.02	924	
025	B-450.01	125	B-440.02	225	B-440.02	325		425		525		625	C-200.02	725	C-200.02	825	C-200.02	925	
026	B-450.01	126	B-440.02	226	B-440.02	326		426		526		626	C-200.02	726	C-200.02	826	C-200.02	926	
027	B-450.01	127	B-440.02	227	B-440.02	327		427		527		627	C-200.02	727	C-200.02	827	C-200.02	927	
028	B-450.01	128	B-440.02	228	B-440.02	328		428		528		628	C-200.02	728	C-200.02	828	C-200.02	928	
029	B-450.01	129	B-440.02	229	B-440.02	329		429		529		629	C-200.02	729	C-200.02	829	C-200.02	929	
030	B-450.01	130	B-440.02	230		330		430		530		630	C-200.02	730	C-200.02	830	C-200.02	930	
031	B-450.01	131	B-440.02	231	B-440.02	331		431		531		631	C-200.02	731	C-200.02	831	C-200.02	931	
032	B-450.01	132	B-440.02	232	B-440.02	332		432		532		632	C-200.02	732	C-200.02	832	C-200.02	932	
033	B-450.01	133	B-440.02	233	B-440.02	333		433		533		633	C-200.02	733	C-200.02	833	C-200.02	933	
034	B-450.01	134	B-440.02	234	B-440.02	334		434		534		634	C-200.02	734	C-200.02	834	C-200.02	934	
035	B-450.01	135	B-440.02	235	B-440.02	335		435		535		635	C-200.02	735	C-200.02	835	C-200.02	935	
036	B-450.01	136	B-440.02	236	B-440.02	336		436		536		636	C-200.02	736	C-200.02	836	C-200.02	936	
037	B-450.01	137	B-440.02	237	B-440.02	337		437		537		637	C-200.02	737	C-200.02	837	C-200.02	937	
038	B-450.01	138	B-440.02	238		338		438		538		638	C-200.02	738	C-200.02	838	C-200.02	938	
039	B-450.01	139	B-440.02	239	B-440.02	339		439		539		639	C-200.02	739	C-200.02	839	C-200.02	939	
040	B-450.01	140	B-440.02	240	B-440.02	340		440		540		640	C-200.02	740	C-200.02	840	C-200.02	940	
041	B-450.01	141	B-440.02	241	B-440.02	341		441		541		641	C-200.02	741	C-200.02	841	C-200.02	941	
042	B-450.01	142	B-440.02	242	B-440.02	342		442		542		642	C-200.02	742	C-200.02	842	C-200.02	942	
043	B-450.01	143	B-440.02	243	B-440.02	343		443		543		643	C-200.02	743	C-200.02	843	C-200.02	943	
044	B-450.01	144	B-440.02	244	B-440.02	344		444		544		644	C-200.02	744	C-200.02	844	C-200.02	944	
045	B-450.01	145	B-440.02	245	B-440.02	345		445		545		645	C-200.02	745	C-200.02	845	C-200.02	945	
046	B-450.01	146	B-440.02	246		346		446		546		646	C-200.02	746	C-200.02	846	C-200.02	946	
047	B-450.01	147	B-440.02	247	B-440.02	347		447		547		647	C-200.02	747	C-200.02	847	C-200.02	947	
048	B-450.01	148	B-440.02	248	B-440.02	348		448		548		648	C-200.02	748	C-200.02	848	C-200.02	948	
049	B-450.01	149	B-440.02	249	B-440.02	349		449		549		649	C-200.02	749	C-200.02	849	C-200.02	949	
050	B-450.01	150		250	B-440.02	350		450		550		650	C-200.02	750	C-200.02	850	C-200.02	950	
051	B-450.01	151	B-440.02	251	B-440.02	351		451		551		651	C-200.02	751	C-200.02	851	C-200.02	951	
052	B-450.01	152	B-440.02	252	B-440.02	352		452		552		652	C-200.02	752	C-200.02	852	C-200.02	952	
053	B-450.01	153	B-440.02	253	B-440.02	353		453		553		653	C-200.02	753	C-200.02	853	C-200.02	953	
054	B-450.01	154	B-440.02	254		354		454		554		654	C-200.02	754	C-200.02	854	C-200.02	954	
055	B-450.01	155	B-440.02	255	B-440.02	355		455		555		655	C-200.02	755	C-200.02	855	C-200.02	955	
056	B-450.01	156	B-440.02	256	B-440.02	356		456		556		656	C-200.02	756	C-200.02	856	C-200.02	956	
057	B-450.01	157	B-440.02	257	B-440.02	357		457		557		657	C-200.02	757	C-200.02	857	C-200.02	957	
058	B-450.01	158		258	B-440.02	358		458		558		658	C-200.02	758	C-200.02	858	C-200.02	958	
059	B-450.01	159	B-440.02	259	B-440.02	359		459		559		659	C-200.02	759	C-200.02	859	C-200.02	959	
060	B-450.01	160	B-440.02	260	B-440.02	360		460		560		660	C-200.02	760	C-200.02	860	C-200.02	960	
061	B-450.01	161	B-440.02	261	B-440.02	361		461		561		661	C-200.02	761	C-200.02	861	C-200.02	961	
062	B-450.01	162	B-440.02	262		362		462		562		662	C-200.02	762	C-200.02	862	C-200.02	962	
063	B-450.01	163	B-440.02	263	B-440.02	363		463		563		663	C-200.02	763	C-200.02	863	C-200.02	963	
064	B-450.01	164	B-440.02	264	B-440.02	364		464		564		664	C-200.02	764	C-200.02	864	C-200.02	964	
065	B-450.01	165	B-440.02	265	B-440.02	365		465		565		665	C-200.02	765	C-200.02	865	C-200.02	965	
066	B-450.01	166		266	B-440.02	366		466		566		666	C-200.02	766	C-200.02	866	C-200.02	966	
067	B-450.01	167	B-440.02	267	B-440.02	367		467		567		667	C-200.02	767	C-200.02	867	C-200.02	967	
068		168	B-440.02	268	B-440.02	368		468		568		668		768	C-200.02	868	C-200.02	968	
069		169	B-440.02	269	B-440.02	369		469		569		669		769	C-200.02	879	C-200.02	969	
070		170	B-440.02	270		370		470		570		670		770	C-200.02	870	C-200.02	970	
071		171	B-440.02	271	B-440.02	371		471		571		671		771	C-200.02	871	C-200.02	971	
072		172	B-440.02	272	B-440.02	372		472		572		672		772	C-200.02	872	C-200.02	972	
073		173	B-440.02	273	B-440.02	373		473		573		673		773	C-200.02	873	C-200.02	973	
074		174		274	B-440.02	374		474		574		674		774	C-200.02	874	C-200.02	974	
075		175	B-440.02	275	B-440.02	375		475		575		675		775	C-200.02	875	C-200.02	975	
076		176	B-440.02	276	B-440.02	376		476		576		676	C-200.02	776	C-200.02	876	C-200.02	976	
077		177	B-440.02	277	B-440.02	377		477		577		677	C-200.02	777	C-200.02	877	C-200.02	977	
078		178	B-440.02	278		378		478		578		678	C-200.02	778	C-200.02	878	C-200.02	978	
079		179	B-440.02	279	B-440.02	379		479		579		679	C-200.02	779	C-200.02	879	C-200.02	979	
080		180	B-440.02	280	B-440.02	380		480		580		680	C-200.02	780	C-200.02	880	C-200.02	980	
081		181	B-440.02	281	B-440.02	381		481		581		681	C-200.02	781	C-200.02	881	C-200.02	981	
082		182		282	B-440.02	382		482		582		682	C-200.02	782	C-200.02	882	C-200.02	982	
083		183	B-440.02	283	B-440.02	383		483		583		683	C-200.02	783	C-200.02	883	C-200.02	983	
084		184	B-440.02	284	B-440.02	384		484		584		684		784	C-200.02	884	C-200.02	984	
085		185	B-440.02	285	B-440.02	385		485		585		685		785	C-200.02	885	C-200.02	985	
086		186	B-440.02	286		386		486		586		686		786	C-200.02	886	C-200.02	986	
087		187	B-440.02	287	B-440.02	387		487		587		687		787	C-200.02	887	C-200.02	987	
088		188	B-440.02	288	B-440.02	388		488		588		688		788	C-200.02	888	C-200.02	988	
089		189	B-440.02	289	B-440.02	389		489		589		689		789	C-200.02	889	C-200.02	989	
090		190		290	B-440.02	390		490		590		690		790	C-200.02	890	C-200.02	990	
091		191	B-440.02	291	B-440.02	391		491		591		691		791	C-200.02	891	C-200.02	991	
092		192	B-440.02	292	B-440.02	392		492		592		692	C-200.02	792	C-200.02	892	C-200.02	992	
093		193	B-440.02	293	B-440.02	393		493		593		693	C-200.02	793	C-200.02	893	C-200.02	993	
094		194	B-440.02	294		394		494		594		694	C-200.02	794	C-200.02	894	C-200.02	994	
095		195	B-440.02	295	B-440.02	395		495		595		695	C-200.02	795	C-200.02	895	C-200.02	995	
096		196	B-440.02	296		396		496		596		696	C-200.02	796	C-200.02	896	C-200.02	996	
097		197	B-440.02	297	C-200.02	397		497		597		697	C-200.02	797	C-200.02	897	C-200.02	997	
098		198		298	C-200.02	398		498		598		698	C-200.02	798	C-200.02	898	C-200.02	998	
099		199	B-440.02	299	C-200.02	399		499		599		699	C-200.02	799	C-200.02	899	C-200.02	999	

FORD MOTOR COMPANY
STANDARD PARTS

INDEX

THE TWO NUMBERS AT THE TOP OF THE NO. COLUMN ARE THE FIRST DIGITS OF THE FIVE DIGIT NUMBER AND FOLLOWING NUMBERS IN THE COLUMN ARE THE LAST THREE DIGITS OF THE FIVE DIGIT NUMBER.

No.	Page	No.	Page	No.	Page	No.	Page	No.	Page	No.	Page	No.	Page	No.	Page	No.	Page	No.	Page
25		25		25		25		25		25		25		25		25		25	
000		100		200		300		400		500	C-200.03	600	C-200.03	700		800		900	C-200.03
001		101		201		301		401	C-200.02	501	C-200.03	601	C-200.03	701		801		901	C-200.03
002		102		202		302		402	C-200.02	502	C-200.03	602	C-200.03	702		802		902	
003		103		203	C-200.02	303	C-200.02	403	C-200.02	503	C-200.03	603	C-200.03	703		803		903	
004		104		204		304		404		504	C-200.03	604	C-200.03	704		804		904	
005		105		205		305	C-200.02	405		505	C-200.02	605	C-200.03	705		805		905	
006		106		206		306	C-200.02	406		506	C-200.03	606		706		806		906	
007		107		207		307	C-200.02	407	C-200.02	507	C-200.03	607		707		807		907	
008		108		208	C-200.02	308		408		508	C-200.03	608		708		808		908	
009		109		209		309		409	C-200.02	509	C-200.03	609		709		809		909	
010		110		210		310		410	C-200.02	510	C-200.03	610		710		810		910	
011		111		211		311	C-200.02	411	C-200.02	511	C-200.03	611		711		811		911	C-200.03
012		112		212		312		412		512	C-200.03	612		712		812		912	C-200.03
013		113		213	C-200.02	313	C-200.02	413		513	C-200.03	613		713		813		913	C-200.03
014		114		214		314	C-200.02	414		514	C-200.03	614		714		814		914	C-200.03
015		115		215		315	C-200.02	415	C-200.02	515	C-200.03	615		715		815		915	C-200.03
016		116		216		316		416		516	C-200.03	616		716		816		916	C-200.03
017		117		217		317		417	C-200.02	517	C-200.03	617		717		817		917	C-200.03
018		118		218	C-200.02	318		418	C-200.02	518		618		718		818		918	C-200.03
019		119		219		319	C-200.02	419	C-200.02	519		619		719		819		919	
020		120		220		320		420		520		620		720		820		920	
021		121		221		321	C-200.02	421		521	C-200.03	621		721		821		921	
022		122		222		322	C-200.02	422		522	C-200.03	622		722		822		922	
023		123		223	C-200.02	323	C-200.02	423	C-200.02	523	C-200.03	623		723		823		923	
024		124		224		324		424		524		624		724		824		924	
025		125		225	C-200.02	325		425	C-200.02	525		625		725		825		925	
026		126		226	C-200.02	326		426	C-200.02	526		626		726		826		926	
027		127		227	C-200.02	327	C-200.02	427	C-200.02	527	C-200.03	627		727		827		927	C-200.03
028		128		228		328		428		528	C-200.03	628		728		828		928	C-200.03
029		129		229		329	C-200.02	429		529	C-200.03	629		729		829		929	C-200.03
030		130		230		330	C-200.02	430		530	C-200.03	630		730		830		930	C-200.03
031		131		231	C-200.02	331	C-200.02	431	C-200.02	531	C-200.03	631		731		831		931	C-200.03
032		132		232		332		432		532	C-200.03	632		732		832		932	C-200.03
033		133		233	C-200.02	333		433	C-200.02	533	C-200.03	633		733		833		933	C-200.03
034		134		234	C-200.02	334		434	C-200.02	534	C-200.03	634		734		834		934	C-200.03
035		135		235	C-200.02	335	C-200.02	435	C-200.02	535	C-200.03	635		735		835	C-200.03	935	C-200.03
036		136		236		336		436		536	C-200.03	636		736		836	C-200.03	936	C-200.03
037		137		237		337	C-200.02	437		537	C-200.03	637		737		837	C-200.03	937	C-200.03
038		138		238		338	C-200.02	438		538	C-200.03	638		738		838	C-200.03	938	C-200.03
039		139		239	C-200.02	339	C-200.02	439	C-200.02	539	C-200.03	639		739		839	C-200.03	939	C-200.03
040		140		240		340		440		540	C-200.03	640		740		840	C-200.03	940	C-200.03
041		141		241	C-200.02	341		441	C-200.02	541	C-200.03	641		741		841	C-200.03	941	C-200.03
042		142		242	C-200.02	342		442	C-200.02	542	C-200.03	642		742		842	C-200.03	942	C-200.03
043		143		243	C-200.02	343	C-200.02	443	C-200.02	543	C-200.03	643		743		843	C-200.03	943	C-200.03
044		144		244		344		444		544	C-200.03	644		744		844	C-200.03	944	C-200.03
045		145		245		345	C-200.02	445		545	C-200.03	645		745		845	C-200.03	945	C-200.03
046		146		246		346	C-200.02	446		546	C-200.03	646		746		846	C-200.03	946	C-200.03
047		147		247	C-200.02	347	C-200.02	447	C-200.02	547	C-200.03	647		747		847	C-200.03	947	C-200.03
048		148		248		348		448		548	C-200.03	648		748		848	C-200.03	948	C-200.03
049		149		249	C-200.02	349		449	C-200.02	549	C-200.03	649		749		849	C-200.03	949	C-200.03
050		150		250	C-200.02	350		450	C-200.02	550	C-200.03	650		750		850	C-200.03	950	C-200.03
051		151		251	C-200.02	351	C-200.02	451	C-200.02	551	C-200.03	651		751		851	C-200.03	951	C-200.03
052		152		252		352		452		552	C-200.03	652		752		852	C-200.03	952	C-200.03
053		153		253		353	C-200.02	453		553	C-200.03	653		753		853	C-200.03	953	C-200.03
054		154		254		354	C-200.02	454		554	C-200.03	654		754		854	C-200.03	954	C-200.03
055		155		255	C-200.02	355	C-200.02	455	C-200.02	555	C-200.03	655		755		855	C-200.03	955	C-200.03
056		156		256		356		456		556	C-200.03	656		756		856	C-200.03	956	C-200.03
057		157		257	C-200.02	357		457	C-200.02	557	C-200.03	657		757		857	C-200.03	957	C-200.03
058		158		258	C-200.02	358		458	C-200.02	558	C-200.03	658		758		858	C-200.03	958	C-200.03
059		159		259	C-200.02	359	C-200.02	459	C-200.02	559		659		759		859	C-200.03	959	C-200.03
060		160		260		360		460		560	C-200.03	660		760		860	C-200.03	960	C-200.03
061		161		261		361	C-200.02	461		561	C-200.03	661		761		861	C-200.03	961	C-200.03
062		162		262		362	C-200.02	462		562	C-200.03	662		762		862	C-200.03	962	C-200.03
063		163		263	C-200.02	363	C-200.02	463	C-200.02	563	C-200.03	663		763		863	C-200.03	963	C-200.03
064		164		264		364		464		564	C-200.03	664		764		864	C-200.03	964	C-200.03
065		165		265	C-200.02	365		465	C-200.02	565	C-200.03	665		765		865	C-200.03	965	C-200.03
066		166		266	C-200.02	366		466	C-200.02	566	C-200.03	666		766		866	C-200.03	966	C-200.03
067		167		267	C-200.02	367	C-200.02	467	C-200.02	567	C-200.03	667		767		867	C-200.03	967	C-200.03
068		168		268		368		468		568	C-200.03	668		768		868	C-200.03	968	C-200.03
069		169		269		369	C-200.02	469		569	C-200.03	669		769		879	C-200.03	969	C-200.03
070		170		270		370	C-200.02	470		570	C-200.03	670		770		870	C-200.03	970	C-200.03
071		171		271		371	C-200.02	471	C-200.02	571	C-200.03	671		771		871	C-200.03	971	C-200.03
072		172		272		372		472		572	C-200.03	672		772		872	C-200.03	972	C-200.03
073		173		273		373		473	C-200.02	573	C-200.03	673		773		873	C-200.03	973	C-200.03
074		174		274		374		474	C-200.02	574	C-200.03	674		774		874	C-200.03	974	C-200.03
075		175		275		375	C-200.02	475	C-200.02	575	C-200.03	675		775		875	C-200.03	975	C-200.03
076		176		276		376		476		576	C-200.03	676		776		876	C-200.03	976	C-200.03
077		177		277		377	C-200.02	477		577	C-200.03	677		777		877	C-200.03	977	C-200.03
078		178		278		378	C-200.02	478		578	C-200.03	678		778		878	C-200.03	978	C-200.03
079		179		279	C-200.02	379	C-200.02	479	C-200.02	579	C-200.03	679		779		879	C-200.03	979	C-200.03
080		180		280		380		480		580	C-200.03	680		780		880	C-200.03	980	C-200.03
081		181		281	C-200.02	381		481	C-200.02	581	C-200.03	681		781		881	C-200.03	981	C-200.03
082		182		282	C-200.02	382		482	C-200.02	582	C-200.03	682		782		882	C-200.03	982	C-200.03
083		183		283	C-200.02	383	C-200.02	483	C-200.02	583	C-200.03	683		783		883	C-200.03	983	C-200.03
084		184		284		384		484		584	C-200.03	684		784		884	C-200.03	984	C-200.03
085		185		285		385	C-200.02	485		585	C-200.03	685		785		885	C-200.03	985	C-200.03
086		186		286		386	C-200.02	486		586	C-200.03	686		786		886	C-200.03	986	C-200.03
087		187		287		387	C-200.02	487	C-200.02	587	C-200.03	687		787		887	C-200.03	987	C-200.03
088		188		288		388		488		588	C-200.03	688		788		888	C-200.03	988	C-200.03
089		189		289		389		489	C-200.02	589	C-200.03	689		789		889	C-200.03	989	C-200.03
090		190		290		390		490	C-200.02	590	C-200.03	690		790		890	C-200.03	990	C-200.03
091		191		291		391	C-200.02	491	C-200.02	591	C-200.03	691		791		891	C-200.03	991	C-200.03
092		192		292		392		492		592	C-200.03	692		792		892	C-200.03	992	C-200.03
093		193		293		393	C-200.02	493		593	C-200.03	693		793		893	C-200.03	993	C-200.03
094		194		294		394	C-200.02	494		594	C-200.03	694		794		894	C-200.03	994	C-200.03
095		195		295	C-200.02	395	C-200.02	495	C-200.02	595	C-200.03	695		795		895	C-200.03	995	C-200.03
096		196		296		396		496		596	C-200.03	696		796		896	C-200.03	996	C-200.03
097		197		297	C-200.02	397		497	C-200.02	597	C-200.03	697		797		897	C-200.03	997	C-200.03
098		198		298	C-200.02	398		498	C-200.02	598	C-200.03	698		798		898	C-200.03	998	C-200.03
099		199		299	C-200.02	399	C-200.02	499	C-200.02	599	C-200.03	699		799		899	C-200.03	999	C-200.03

FORD MOTOR COMPANY
STANDARD PARTS

INDEX

THE TWO NUMBERS AT THE TOP OF THE NO. COLUMN ARE THE FIRST DIGITS OF THE FIVE DIGIT NUMBER AND FOLLOWING NUMBERS IN THE COLUMN ARE THE LAST THREE DIGITS OF THE FIVE DIGIT NUMBER.

No.	Page	No.	Page	No.	Page	No.	Page	No.	Page	No.	Page	No.	Page	No.	Page	No.	Page	No.	Page
26		26		26		26		26		26		26		26		26		26	
000	C-200.03	100	C-200.03	200		300		400		500	C-600.01	600	C-600.01	700	C-600.01	800		900	
001	C-200.03	101	C-200.03	201		301		401		501	C-600.01	601	C-600.01	701	C-600.01	801		901	
002	C-200.03	102	C-200.03	202		302		402		502	C-600.01	602	C-600.01	702	C-600.01	802		902	
003	C-200.03	103	C-200.03	203		303		403		503	C-600.01	603	C-600.01	703	C-600.01	803		903	
004	C-200.03	104	C-200.03	204		304		404		504	C-600.01	604	C-600.01	704	C-600.01	804		904	
005	C-200.03	105	C-200.03	205		305		405		505		605	C-600.01	705		805		905	
006	C-200.03	106	C-200.03	206		306		406		506	C-600.01	606	C-600.01	706	C-600.01	806		906	
007	C-200.03	107	C-200.03	207		307		407		507	C-600.01	607	C-600.01	707	C-600.01	807		907	
008	C-200.03	108	C-200.03	208		308		408		508	C-600.01	608	C-600.01	708	C-600.01	808		908	
009	C-200.03	109	C-200.03	209		309		409		509	C-600.01	609		709	C-600.01	809		909	
010	C-200.03	110	C-200.03	210		310		410		510	C-600.01	610	C-600.01	710	C-600.01	810		910	
011	C-200.03	111	C-200.03	211		311		411		511	C-600.01	611	C-600.01	711	C-600.01	811		911	
012	C-200.03	112	C-200.03	212		312		412		512	C-600.01	612	C-600.01	712	C-600.01	812		912	
013	C-200.03	113	C-200.03	213		313		413		513		613	C-600.01	713		813		913	
014	C-200.03	114	C-200.03	214		314		414		514	C-600.01	614	C-600.01	714	C-600.01	814		914	
015	C-200.03	115	C-200.03	215		315		415		515	C-600.01	615	C-600.01	715	C-600.01	815		915	
016	C-200.03	116	C-200.03	216		316		416		516	C-600.01	616	C-600.01	716	C-600.01	816		916	
017	C-200.03	117	C-200.03	217		317		417		517	C-600.01	617		717	C-600.01	817		917	
018	C-200.03	118	C-200.03	218		318		418		518		618	C-600.01	718	C-600.01	818		918	
019	C-200.03	119	C-200.03	219		319		419		519		619	C-600.01	719	C-600.01	819		919	
020	C-200.03	120		220		320		420		520		620	C-600.01	720	C-600.01	820		920	
021	C-200.03	121		221		321		421		521		621	C-600.01	721		821		921	
022	C-200.03	122		222		322		422		522		622	C-600.01	722	C-600.01	822		922	
023	C-200.03	123		223		323		423		523		623	C-600.01	723	C-600.01	823		923	
024	C-200.03	124		224		324		424		524		624	C-600.01	724	C-600.01	824		924	
025	C-200.03	125		225		325		425		525		625		725	C-600.01	825		925	
026	C-200.03	126		226		326		426		526	C-600.01	626	C-600.01	726	C-600.01	826		926	
027	C-200.03	127		227		327		427		527	C-600.01	627	C-600.01	727	C-600.01	827		927	
028	C-200.03	128		228		328		428		528	C-600.01	628	C-600.01	728	C-600.01	828		928	
029	C-200.03	129		229		329		429		529		629	C-600.01	729		829		929	
030	C-200.03	130		230		330		430		530	C-600.01	630	C-600.01	730	C-600.01	830		930	
031	C-200.03	131		231		331		431		531	C-600.01	631	C-600.01	731	C-600.01	831		931	
032	C-200.03	132		232		332		432		532	C-600.01	632	C-600.01	732	C-600.01	832		932	
033	C-200.03	133		233		333		433		533	C-600.01	633		733	C-600.01	833		933	
034	C-200.03	134		234		334		434		534		634	C-600.01	734	C-600.01	834		934	
035	C-200.03	135		235		335		435		535		635	C-600.01	735	C-600.01	835		935	
036	C-200.03	136		236		336		436		536		636	C-600.01	736	C-600.01	836		936	
037	C-200.03	137		237		337		437		537		637	C-600.01	737		837		937	
038	C-200.03	138		238		338		438		538		638	C-600.01	738	C-600.01	838		938	
039	C-200.03	139		239		339		439		539		639	C-600.01	739	C-600.01	839		939	
040	C-200.03	140		240		340		440		540		640	C-600.01	740	C-600.01	840		940	
041	C-200.03	141		241		341		441		541		641		741	C-600.01	841		941	
042	C-200.03	142		242		342		442		542	C-600.01	642	C-600.01	742	C-600.01	842		942	
043	C-200.03	143		243		343		443		543	C-600.01	643	C-600.01	743	C-600.01	843		943	
044	C-200.03	144		244		344		444		544	C-600.01	644	C-600.01	744	C-600.01	844		944	
045	C-200.03	145	C-600.01	245		345		445		545		645	C-600.01	745		845		945	
046	C-200.03	146	C-600.01	246		346		446		546	C-600.01	646	C-600.01	746	C-600.01	846		946	
047	C-200.03	147	C-600.01	247		347		447		547	C-600.01	647	C-600.01	747	C-600.01	847		947	
048	C-200.03	148	C-600.01	248		348		448		548	C-600.01	648	C-600.01	748	C-600.01	848		948	
049	C-200.03	149	C-600.01	249		349		449		549	C-600.01	649		749	C-600.01	849		949	
050	C-200.03	150		250		350		450	C-600.01	550	C-600.01	650	C-600.01	750		850		950	
051	C-200.03	151		251		351		451	C-600.01	551	C-600.01	651	C-600.01	751		851		951	
052	C-200.03	152		252		352		452	C-600.01	552	C-600.01	652	C-600.01	752		852		952	
053	C-200.03	153		253		353		453		553		653	C-600.01	753		853		953	
054	C-200.03	154		254		354		454	C-600.01	554	C-600.01	654	C-600.01	754		854		954	
055	C-200.03	155		255		355		455	C-600.01	555	C-600.01	655	C-600.01	755		855		955	
056	C-200.03	156		256		356		456	C-600.01	556	C-600.01	656	C-600.01	756		856		956	
057	C-200.03	157		257		357		457	C-600.01	557	C-600.01	657		757		857		957	
058	C-200.03	158		258		358		458		558	C-600.01	658	C-600.01	758		858		958	
059	C-200.03	159		259		359		459	C-600.01	559	C-600.01	659	C-600.01	759		859		959	
060	C-200.03	160		260		360		460	C-600.01	560	C-600.01	660	C-600.01	760		860		960	
061	C-200.03	161		261		361		461	C-600.01	561		661	C-600.01	761		861		961	
062	C-200.03	162		262		362		462	C-600.01	562	C-600.01	662	C-600.01	762		862		962	
063	C-200.03	163		263		363		463		563	C-600.01	663	C-600.01	763		863		963	
064	C-200.03	164		264		364		464	C-600.01	564	C-600.01	664	C-600.01	764		864		964	
065	C-200.03	165		265		365		465	C-600.01	565	C-600.01	665		765		865		965	
066	C-200.03	166		266		366		466	C-600.01	566	C-600.01	666	C-600.01	766		866		966	
067	C-200.03	167		267		367		467	C-600.01	567	C-600.01	667	C-600.01	767		867		967	
068	C-200.03	168		268		368		468		568	C-600.01	668	C-600.01	768		868		968	
069	C-200.03	169		269		369		469	C-600.01	569		669	C-600.01	769		879		969	
070	C-200.03	170		270		370		470	C-600.01	570	C-600.01	670	C-600.01	770		870		970	
071	C-200.03	171		271		371		471	C-600.01	571	C-600.01	671	C-600.01	771		871		971	
072	C-200.03	172		272		372		472	C-600.01	572	C-600.01	672	C-600.01	772		872		972	
073	C-200.03	173		273		373		473		573	C-600.01	673		773		873		973	
074	C-200.03	174		274		374		474	C-600.01	574	C-600.01	674	C-600.01	774		874		974	
075	C-200.03	175		275		375		475	C-600.01	575	C-600.01	675	C-600.01	775		875		975	
076	C-200.03	176		276		376		476	C-600.01	576	C-600.01	676	C-600.01	776		876		976	
077	C-200.03	177		277		377		477	C-600.01	577		677	C-600.01	777		877		977	
078	C-200.03	178		278		378		478	C-600.01	578	C-600.01	678	C-600.01	778		878		978	
079	C-200.03	179		279		379		479	C-600.01	579	C-600.01	679	C-600.01	779		879		979	
080	C-200.03	180		280		380		480	C-600.01	580	C-600.01	680	C-600.01	780		880		980	
081	C-200.03	181		281		381		481		581	C-600.01	681		781		881		981	
082	C-200.03	182		282		382		482	C-600.01	582	C-600.01	682	C-600.01	782		882		982	
083	C-200.03	183		283		383		483	C-600.01	583	C-600.01	683	C-600.01	783		883		983	
084	C-200.03	184		284		384		484	C-600.01	584	C-600.01	684	C-600.01	784		884		984	
085	C-200.03	185		285		385		485	C-600.01	585		685	C-600.01	785		885		985	
086	C-200.03	186		286		386		486	C-600.01	586	C-600.01	686	C-600.01	786		886		986	
087	C-200.03	187		287		387		487	C-600.01	587	C-600.01	687	C-600.01	787		887		987	
088	C-200.03	188		288		388		488	C-600.01	588	C-600.01	688	C-600.01	788		888		988	
089	C-200.03	189		289		389		489		589	C-600.01	689		789		889		989	
090	C-200.03	190		290		390		490	C-600.01	590	C-600.01	690	C-600.01	790		890		990	
091	C-200.03	191		291		391		491	C-600.01	591	C-600.01	691	C-600.01	791		891		991	
092	C-200.03	192		292		392		492	C-600.01	592	C-600.01	692	C-600.01	792		892		992	
093	C-200.03	193		293		393		493	C-600.01	593		693	C-600.01	793		893		993	
094	C-200.03	194		294		394		494	C-600.01	594	C-600.01	694	C-600.01	794		894		994	
095	C-200.03	195		295		395		495	C-600.01	595	C-600.01	695	C-600.01	795		895		995	
096	C-200.03	196		296		396		496	C-600.01	596	C-600.01	696	C-600.01	796		896		996	
097	C-200.03	197		297		397		497		597	C-600.01	697		797		897		997	
098	C-200.03	198		298		398		498	C-600.01	598	C-600.01	698	C-600.01	798		898		998	
099	C-200.03	199		299		399		499	C-600.01	599	C-600.01	699	C-600.01	799		899		999	

FORD MOTOR COMPANY
STANDARD PARTS

INDEX

THE TWO NUMBERS AT THE TOP OF THE NO. COLUMN ARE THE FIRST DIGITS OF THE FIVE DIGIT NUMBER AND FOLLOWING NUMBERS IN THE COLUMN ARE THE LAST THREE DIGITS OF THE FIVE DIGIT NUMBER.

No.	Page	No.	Page	No.	Page	No.	Page	No.	Page	No.	Page	No.	Page	No.	Page	No.	Page	No.	Page
27		27		27		27		27		27		27		27		27		27	
000		100	C-600.01	200		300	C-600.01	400	C-600.02	500		600		700	C-600.02	800	C-600.02	900	C-600.02
001		101	C-600.01	201	C-600.01	301	C-600.01	401	C-600.02	501		601		701	C-600.02	801	C-600.02	901	C-600.02
002		102		202		302		402	C-600.02	502		602		702	C-600.02	802	C-600.02	902	C-600.02
003		103		203	C-600.01	303		403	C-600.02	503		603		703	C-600.02	803	C-600.02	903	C-600.02
004		104		204	C-600.01	304		404	C-600.02	504		604		704	C-600.02	804	C-600.02	904	C-600.02
005		105	C-600.01	205	C-600.01	305	C-600.01	405	C-600.02	505		605		705	C-600.02	805	C-600.02	905	C-600.02
006		106		206		306		406	C-600.02	506		606		706	C-600.02	806	C-600.02	906	C-600.02
007		107	C-600.01	207		307	C-600.01	407	C-600.02	507		607		707	C-600.02	807	C-600.02	907	C-600.02
008		108	C-600.01	208		308	C-600.01	408	C-600.02	508		608		708	C-600.02	808	C-600.02	908	C-600.02
009		109	C-600.01	209	C-600.01	309	C-600.01	409	C-600.02	509		609		709	C-600.02	809	C-600.02	909	C-600.02
010		110		210		310		410	C-600.02	510		610		710	C-600.02	810	C-600.02	910	C-600.02
011		111		211	C-600.01	311		411	C-600.02	511		611		711	C-600.02	811	C-600.02	911	C-600.02
012		112		212	C-600.01	312		412	C-600.02	512		612		712	C-600.02	812	C-600.02	912	C-600.02
013		113	C-600.01	213	C-600.01	313	C-600.01	413	C-600.02	513		613		713	C-600.02	813	C-600.02	913	C-600.02
014		114		214		314		414	C-600.02	514		614		714	C-600.02	814	C-600.02	914	C-600.02
015		115	C-600.01	215		315	C-600.01	415	C-600.02	515		615		715	C-600.02	815	C-600.02	915	C-600.02
016		116	C-600.01	216		316	C-600.01	416	C-600.02	516		616		716	C-600.02	816	C-600.02	916	C-600.02
017		117	C-600.01	217	C-600.01	317	C-600.01	417	C-600.02	517		617		717	C-600.02	817	C-600.02	917	C-600.02
018		118		218		318		418	C-600.02	518		618		718	C-600.02	818	C-600.02	918	C-600.02
019		119		219	C-600.01	319		419	C-600.02	519		619		719	C-600.02	819	C-600.02	919	C-600.02
020		120		220	C-600.01	320		420	C-600.02	520		620		720	C-600.02	820	C-600.02	920	C-600.02
021		121		221	C-600.01	321	C-600.01	421	C-600.02	521		621		721	C-600.02	821	C-600.02	921	C-600.02
022		122		222		322		422	C-600.02	522		622		722	C-600.02	822	C-600.02	922	C-600.02
023		123		223		323	C-600.01	423	C-600.02	523		623		723	C-600.02	823	C-600.02	923	C-600.02
024		124		224		324	C-600.01	424	C-600.02	524		624		724	C-600.02	824	C-600.02	924	C-600.02
025		125		225	C-600.01	325	C-600.01	425	C-600.02	525		625		725	C-600.02	825	C-600.02	925	C-600.02
026		126		226		326		426	C-600.02	526		626		726	C-600.02	826	C-600.02	926	C-600.02
027		127		227	C-600.01	327		427	C-600.02	527		627		727	C-600.02	827	C-600.02	927	C-600.02
028		128		228	C-600.01	328		428	C-600.02	528		628		728	C-600.02	828	C-600.02	928	C-600.02
029		129	C-600.01	229	C-600.01	329	C-600.01	429	C-600.02	529		629		729	C-600.02	829	C-600.02	929	C-600.02
030		130		230		330		430	C-600.02	530		630		730	C-600.02	830	C-600.02	930	C-600.02
031		131	C-600.01	231		331	C-600.01	431	C-600.02	531		631		731	C-600.02	831	C-600.02	931	C-600.02
032		132	C-600.01	232		332	C-600.01	432	C-600.02	532		632		732	C-600.02	832	C-600.02	932	C-600.02
033		133	C-600.01	233	C-600.01	333	C-600.01	433	C-600.02	533		633		733	C-600.02	833	C-600.02	933	C-600.02
034		134		234		334		434	C-600.02	534		634		734	C-600.02	834	C-600.02	934	C-600.02
035		135		235	C-600.01	335		435	C-600.02	535		635		735	C-600.02	835	C-600.02	935	C-600.02
036		136		236	C-600.01	336		436	C-600.02	536		636		736	C-600.02	836	C-600.02	936	C-600.02
037		137		237	C-600.01	337	C-600.01	437	C-600.02	537		637		737	C-600.02	837	C-600.02	937	C-600.02
038		138		238		338		438	C-600.02	538		638		738	C-600.02	838	C-600.02	938	C-600.02
039		139		239		339	C-600.01	439	C-600.02	539		639		739	C-600.02	839	C-600.02	939	C-600.02
040		140		240		340	C-600.01	440	C-600.02	540		640		740	C-600.02	840	C-600.02	940	C-600.02
041		141		241	C-600.01	341	C-600.01	441	C-600.02	541		641		741	C-600.02	841	C-600.02	941	C-600.02
042		142		242		342		442	C-600.02	542		642		742	C-600.02	842	C-600.02	942	C-600.02
043		143		243	C-600.01	343		443	C-600.02	543		643		743	C-600.02	843	C-600.02	943	C-600.02
044		144		244	C-600.01	344		444	C-600.02	544		644		744	C-600.02	844	C-600.02	944	C-600.02
045		145	C-600.01	245	C-600.01	345	C-600.01	445	C-600.02	545		645		745	C-600.02	845	C-600.02	945	C-600.02
046		146		246		346		446	C-600.02	546		646		746	C-600.02	846	C-600.02	946	C-600.02
047		147	C-600.01	247		347	C-600.01	447	C-600.02	547		647		747	C-600.02	847	C-600.02	947	C-600.02
048		148	C-600.01	248		348	C-600.01	448	C-600.02	548		648		748	C-600.02	848	C-600.02	948	C-600.02
049		149	C-600.01	249	C-600.01	349	C-600.01	449	C-600.02	549		649		749	C-600.02	849	C-600.02	949	C-600.02
050		150		250		350	C-600.02	450	C-600.02	550		650		750	C-600.02	850	C-600.02	950	C-600.02
051		151		251	C-600.01	351	C-600.02	451	C-600.02	551		651		751	C-600.02	851	C-600.02	951	C-600.02
052		152		252	C-600.01	352	C-600.02	452	C-600.02	552		652		752	C-600.02	852	C-600.02	952	C-600.02
053	C-600.01	153	C-600.01	253	C-600.01	353	C-600.02	453	C-600.02	553		653		753		853	C-600.02	953	C-600.02
054		154		254		354	C-600.02	454	C-600.02	554		654		754		854	C-600.02	954	C-600.02
055		155	C-600.01	255		355	C-600.02	455		555		655		755		855	C-600.02	955	C-600.02
056		156	C-600.01	256		356	C-600.02	456		556		656		756		856	C-600.02	956	C-600.02
057		157	C-600.01	257	C-600.01	357	C-600.02	457		557		657		757		857	C-600.02	957	C-600.02
058	C-600.01	158		258		358	C-600.02	458		558		658		758		858	C-600.02	958	C-600.02
059		159		259	C-600.01	359	C-600.02	459		559		659		759		859	C-600.02	959	C-600.02
060		160		260	C-600.01	360	C-600.02	460		560		660		760		860	C-600.02	960	C-600.02
061		161	C-600.01	261	C-600.01	361	C-600.02	461		561		661		761	C-600.02	861	C-600.02	961	C-600.02
062		162		262		362	C-600.02	462		562		662		762	C-600.02	862	C-600.02	962	C-600.02
063	C-600.01	163	C-600.01	263		363	C-600.02	463		563		663		763	C-600.02	863	C-600.02	963	C-600.02
064		164	C-600.01	264		364	C-600.02	464		564		664		764	C-600.02	864	C-600.02	964	C-600.02
065		165	C-600.01	265	C-600.01	365	C-600.02	465		565		665		765	C-600.02	865	C-600.02	965	C-600.02
066		166		266		366	C-600.02	466		566		666		766	C-600.02	866	C-600.02	966	C-600.02
067		167		267	C-600.01	367	C-600.02	467		567		667		767	C-600.02	867	C-600.02	967	C-600.02
068	C-600.01	168		268	C-600.01	368		468		568		668		768	C-600.02	868	C-600.02	968	C-600.02
069		169	C-600.01	269	C-600.01	369		469		569		669		769		879	C-600.02	969	C-600.02
070		170		270		370		470		570		670		770		870	C-600.02	970	
071		171	C-600.01	271		371	C-600.02	471		571		671		771		871	C-600.02	971	
072		172	C-600.01	272		372	C-600.02	472		572		672		772		872	C-600.02	972	
073	C-600.01	173	C-600.01	273	C-600.01	373	C-600.02	473		573		673		773		873	C-600.02	973	
074		174		274		374		474		574		674		774		874	C-600.02	974	
075	C-600.01	175		275	C-600.01	375		475		575		675		775		875	C-600.02	975	
076	C-600.01	176		276	C-600.01	376		476		576		676		776		876	C-600.02	976	
077	C-600.01	177	C-600.01	277	C-600.01	377	C-600.02	477		577		677		777	C-600.02	877	C-600.02	977	
078		178		278		378	C-600.02	478		578		678		778	C-600.02	878	C-600.02	978	
079		179	C-600.01	279		379	C-600.02	479		579		679		779	C-600.02	879	C-600.02	979	
080		180	C-600.01	280		380	C-600.02	480		580		680		780	C-600.02	880	C-600.02	980	
081	C-600.01	181	C-600.01	281	C-600.01	381	C-600.02	481		581		681		781	C-600.02	881	C-600.02	981	
082		182		282		382	C-600.02	482		582		682		782	C-600.02	882	C-600.02	982	
083	C-600.01	183		283	C-600.01	383	C-600.02	483		583		683		783	C-600.02	883	C-600.02	983	
084	C-600.01	184		284	C-600.01	384	C-600.02	484		584		684		784	C-600.02	884	C-600.02	984	
085	C-600.01	185	C-600.01	285	C-600.01	385	C-600.02	485		585		685	C-600.02	785	C-600.02	885	C-600.02	985	
086		186		286		386	C-600.02	486		586		686	C-600.02	786	C-600.02	886	C-600.02	986	
087		187	C-600.01	287		387	C-600.02	487		587		687	C-600.02	787	C-600.02	887	C-600.02	987	
088		188	C-600.01	288		388	C-600.02	488		588		688	C-600.02	788	C-600.02	888	C-600.02	988	
089	C-600.01	189	C-600.01	289	C-600.01	389	C-600.02	489		589		689	C-600.02	789	C-600.02	889	C-600.02	989	
090		190		290		390	C-600.02	490		590		690	C-600.02	790	C-600.02	890	C-600.02	990	
091	C-600.01	191		291	C-600.01	391	C-600.02	491		591		691	C-600.02	791	C-600.02	891	C-600.02	991	
092	C-600.01	192		292	C-600.01	392	C-600.02	492		592		692	C-600.02	792	C-600.02	892	C-600.02	992	
093	C-600.01	193	C-600.01	293	C-600.01	393	C-600.02	493		593		693	C-600.02	793	C-600.02	893	C-600.02	993	
094		194		294		394	C-600.02	494		594		694	C-600.02	794	C-600.02	894	C-600.02	994	
095		195	C-600.01	295		395	C-600.02	495		595		695	C-600.02	795	C-600.02	895	C-600.02	995	
096		196	C-600.01	296		396	C-600.02	496		596		696	C-600.02	796	C-600.02	896	C-600.02	996	
097	C-600.01	197	C-600.01	297	C-600.01	397	C-600.02	497		597		697	C-600.02	797	C-600.02	897	C-600.02	997	
098		198		298		398	C-600.02	498		598		698	C-600.02	798	C-600.02	898	C-600.02	998	
099	C-600.01	199		299	C-600.01	399	C-600.02	499		599		699	C-600.02	799	C-600.02	899	C-600.02	999	

FORD MOTOR COMPANY
STANDARD PARTS

INDEX

THE TWO NUMBERS AT THE TOP OF THE NO. COLUMN ARE THE FIRST DIGITS OF THE FIVE DIGIT NUMBER AND FOLLOWING NUMBERS IN THE COLUMN ARE THE LAST THREE DIGITS OF THE FIVE DIGIT NUMBER.

No.	Page	No.	Page	No.	Page	No.	Page	No.	Page	No.	Page	No.	Page	No.	Page	No.	Page	No.	Page
28		28		28		28		28		28		28		28		28		28	
000		100		200		300	C-400.02	400	C-400.02	500	C-400.02	600		700		800		900	
001		101		201		301	C-400.02	401	C-400.02	501	C-400.02	601		701		801		901	
002		102		202		302	C-400.02	402	C-400.02	502	C-400.02	602		702		802		902	
003		103		203		303		403		503	C-400.02	603		703		803		903	C-400.02
004		104		204		304	C-400.02	404	C-400.02	504	C-400.02	604		704		804		904	
005		105		205		305	C-400.02	405	C-400.02	505	C-400.02	605		705		805		905	
006		106		206		306	C-400.02	406	C-400.02	506	C-400.02	606		706		806		906	
007		107		207		307	C-400.02	407	C-400.02	507		607		707		807		907	
008		108		208		308		408	C-400.02	508	C-400.02	608		708		808		908	C-400.02
009		109		209		309	C-400.02	409	C-400.02	509	C-400.02	609		709		809		909	
010		110		210		310	C-400.02	410	C-400.02	510	C-400.02	610		710		810		910	
011		111		211		311	C-400.02	411		511	C-400.02	611		711		811		911	
012		112		212		312	C-400.02	412	C-400.02	512	C-400.02	612		712		812		912	
013		113		213		313		413	C-400.02	513	C-400.02	613		713		813		913	C-400.02
014		114		214		314	C-400.02	414	C-400.02	514	C-400.02	614		714		814		914	
015		115		215		315	C-400.02	415	C-400.02	515		615		715		815		915	
016		116		216		316	C-400.02	416	C-400.02	516	C-400.02	616		716		816		916	
017		117		217		317	C-400.02	417	C-400.02	517	C-400.02	617		717		817		917	
018		118		218		318		418	C-400.02	518	C-400.02	618		718		818		918	C-400.02
019		119		219		319	C-400.02	419		519	C-400.02	619		719		819		919	
020		120		220		320	C-400.02	420	C-400.02	520	C-400.02	620		720		820		920	
021		121		221		321	C-400.02	421	C-400.02	521	C-400.02	621		721		821		921	
022		122		222		322	C-400.02	422	C-400.02	522	C-400.02	622		722		822		922	
023		123		223		323		423	C-400.02	523		623		723		823		923	C-400.02
024		124		224		324	C-400.02	424	C-400.02	524	C-400.02	624		724		824		924	
025		125		225		325	C-400.02	425	C-400.02	525	C-400.02	625		725		825		925	C-400.02
026		126		226		326	C-400.02	426	C-400.02	526	C-400.02	626		726		826		926	C-400.02
027		127		227		327	C-400.02	427		527	C-400.02	627		727		827		927	C-400.02
028		128		228		328	C-400.02	428	C-400.02	528	C-400.02	628		728		828		928	
029		129		229		329	C-400.02	429	C-400.02	529	C-400.02	629		729		829		929	
030		130		230		330	C-400.02	430	C-400.02	530	C-400.02	630		730		830		930	
031		131		231		331		431	C-400.02	531		631		731		831		931	C-400.02
032		132		232		332	C-400.02	432	C-400.02	532	C-400.02	632		732		832		932	
033		133		233		333	C-400.02	433	C-400.02	533	C-400.02	633		733		833		933	C-400.02
034		134		234		334	C-400.02	434	C-400.02	534	C-400.02	634		734		834		934	C-400.02
035		135		235		335	C-400.02	435		535	C-400.02	635		735		835		935	C-400.02
036		136		236		336	C-400.02	436	C-400.02	536	C-400.02	636		736		836		936	
037		137		237		337	C-400.02	437	C-400.02	537	C-400.02	637		737		837		937	
038		138		238		338	C-400.02	438	C-400.02	538	C-400.02	638		738		838		938	
039		139		239		339		439	C-400.02	539		639		739		839		939	C-400.02
040		140		240		340	C-400.02	440	C-400.02	540	C-400.02	640		740		840		940	
041		141		241		341	C-400.02	441	C-400.02	541	C-400.02	641		741		841		941	C-400.02
042		142		242		342	C-400.02	442	C-400.02	542	C-400.02	642		742		842		942	C-400.02
043		143		243		343	C-400.02	443		543	C-400.02	643		743		843		943	C-400.02
044		144		244		344	C-400.02	444	C-400.02	544	C-400.02	644		744		844		944	
045		145		245		345	C-400.02	445	C-400.02	545	C-400.02	645		745		845		945	
046		146		246		346	C-400.02	446	C-400.02	546	C-400.02	646		746		846		946	
047		147		247		347		447	C-400.02	547		647		747		847		947	C-400.02
048		148		248		348	C-400.02	448	C-400.02	548	C-400.02	648		748		848		948	
049		149		249		349	C-400.02	449	C-400.02	549	C-400.02	649		749		849		949	C-400.02
050		150		250		350	C-400.02	450	C-400.02	550	C-400.02	650		750		850		950	C-400.02
051		151		251		351	C-400.02	451		551	C-400.02	651		751		851		951	C-400.02
052		152		252		352	C-400.02	452	C-400.02	552	C-400.02	652		752		852		952	
053		153		253		353	C-400.02	453	C-400.02	553	C-400.02	653		753		853		953	
054		154		254		354	C-400.02	454	C-400.02	554	C-400.02	654		754		854		954	
055		155		255		355		455	C-400.02	555		655		755		855		955	C-400.02
056		156		256		356	C-400.02	456	C-400.02	556	C-400.02	656		756		856		956	
057		157		257		357	C-400.02	457	C-400.02	557	C-400.02	657		757		857		957	C-400.02
058		158		258		358	C-400.02	458	C-400.02	558	C-400.02	658		758		858		958	C-400.02
059		159		259		359	C-400.02	459		559	C-400.02	659		759		859		959	C-400.02
060		160		260		360	C-400.02	460	C-400.02	560	C-400.02	660		760		860		960	
061		161		261		361	C-400.02	461	C-400.02	561	C-400.02	661		761		861		961	
062		162		262		362	C-400.02	462	C-400.02	562	C-400.02	662		762		862		962	
063		163		263		363		463	C-400.02	563		663		763		863		963	C-400.02
064		164		264		364	C-400.02	464	C-400.02	564	C-400.02	664		764		864		964	
065		165		265		365	C-400.02	465	C-400.02	565	C-400.02	665		765		865		965	C-400.02
066		166		266		366	C-400.02	466	C-400.02	566	C-400.02	666		766		866		966	C-400.02
067		167		267		367	C-400.02	467		567	C-400.02	667		767		867		967	C-400.02
068		168		268		368		468	C-400.02	568	C-400.02	668		768		868		968	
069		169		269		369		469	C-400.02	569	C-400.02	669		769		879		969	
070		170		270		370		470	C-400.02	570	C-400.02	670		770		870		970	
071		171		271		371		471	C-400.02	571		671		771		871		971	
072		172		272		372		472	C-400.02	572	C 400.02	672		772		872		972	
073		173		273		373		473	C-400.02	573	C-400.02	673		773		873		973	
074		174		274		374		474	C-400.02	574	C-400.02	674		774		874		974	
075		175		275		375		475		575	C-400.02	675		775		875		975	
076		176		276		376	C-400.02	476	C-400.02	576	C-400.02	676		776		876		976	
077		177		277		377	C-400.02	477	C-400.02	577	C-400.02	677		777		877		977	
078		178		278		378	C-400.02	478	C-400.02	578	C-400.02	678		778		878		978	
079		179		279		379		479	C-400.02	579		679		779		879		979	C-400.02
080		180		280		380	C-400.02	480	C-400.02	580	C-400.02	680		780		880		980	
081		181		281		381	C-400.02	481	C-400.02	581	C-400.02	681		781		881		981	C-400.02
082		182		282		382	C-400.02	482	C-400.02	582	C-400.02	682		782		882		982	C-400.02
083		183		283		383	C-400.02	483		583	C-400.02	683		783		883		983	C-400.02
084		184		284		384		484	C-400.02	584	C-400.02	684		784		884		984	
085		185		285		385		485	C-400.02	585	C-400.02	685		785		885		985	
086		186		286		386		486	C-400.02	586	C-400.02	686		786		886		986	
087		187		287		387		487	C-400.02	587		687		787		887		987	
088		188		288		388		488	C-400.02	588	C-400.02	688		788		888		988	
089		189		289		389		489	C-400.02	589	C-400.02	689		789		889		989	
090		190		290		390		490	C-400.02	590	C-400.02	690		790		890		990	
091		191		291		391		491		591	C-400.02	691		791		891		991	
092		192		292		392	C-400.02	492	C-400.02	592	C-400.02	692		792		892		992	
093		193		293		393	C-400.02	493	C-400.02	593	C-400.02	693		793		893		993	
094		194		294		394	C-400.02	494	C-400.02	594	C-400.02	694		794		894		994	
095		195		295		395		495	C-400.02	595		695		795		895		995	C-400.02
096		196		296		396	C-400.02	496	C-400.02	596	C-400.02	696		796		896		996	
097		197		297		397	C-400.02	497	C-400.02	597	C-400.02	697		797		897		997	C-400.02
098		198		298		398	C-400.02	498	C-400.02	598	C-400.02	698		798		898		998	C-400.02
099		199		299		399	C-400.02	499		599	C-400.02	699		799		899		999	C-400.02

FORD MOTOR COMPANY
STANDARD PARTS

INDEX

THE TWO NUMBERS AT THE TOP OF THE NO. COLUMN ARE THE FIRST DIGITS OF THE FIVE DIGIT NUMBER AND FOLLOWING NUMBERS IN THE COLUMN ARE THE LAST THREE DIGITS OF THE FIVE DIGIT NUMBER.

No.	Page	No.	Page	No.	Page	No.	Page	No.	Page	No.	Page	No.	Page	No.	Page	No.	Page	No.	Page
29		29		29		29		29		29		29		29		29		29	
000		100		200	C-400.03	300	C-400.03	400		500		600	C-400.03	700	C-400.03	800	C-400.03	900	
001		101	C-400.02	201	C-400.03	301	C-400.03	401		501		601	C-400.03	701	C-400.03	801	C-400.03	901	
002		102	C-400.02	202	C-400.03	302	C-400.03	402		502		602	C-400.03	702	C-400.03	802	C-400.03	902	
003	C-400.02	103	C-400.02	203	C-400.03	303	C-400.03	403		503		603		703	C-400.03	803	C-400.03	903	
004		104		204	C-400.03	304	C-400.03	404		504		604		704	C-400.03	804	C-400.03	904	
005	C-400.02	105		205	C-400.03	305		405		505		605		705	C-400.03	805	C-400.03	905	
006	C-400.02	106		206	C-400.03	306		406		506		606		706	C-400.03	806	C-400.03	906	
007	C-400.02	107	C-400.02	207	C-400.03	307		407		507		607		707	C-400.03	807	C-400.03	907	
008		108		208	C-400.03	308		408		508		608		708	C-400.03	808	C-400.03	908	
009		109	C-400.02	209	C-400.03	309		409		509		609		709	C-400.03	809	C-400.03	909	
010		110	C-400.02	210	C-400.03	310		410		510		610		710	C-400.03	810	C-400.03	910	
011	C-400.02	111	C-400.02	211	C-400.03	311		411		511		611	C-400.03	711	C-400.03	811	C-400.03	911	
012		112		212	C-400.03	312		412		512		612	C-400.03	712	C-400.03	812	C-400.03	912	
013	C-400.02	113		213	C-400.03	313		413		513		613	C-400.03	713	C-400.03	813	C-400.03	913	
014	C-400.02	114		214	C-400.03	314		414		514		614	C-400.03	714	C-400.03	814	C-400.03	914	
015	C-400.02	115	C-400.02	215	C-400.03	315		415		515		615	C-400.03	715	C-400.03	815	C-400.03	915	
016		116		216	C-400.03	316		416		516		616	C-400.03	716	C-400.03	816	C-400.03	916	
017		117	C-400.02	217	C-400.03	317		417		517		617	C-400.03	717	C-400.03	817	C-400.03	917	
018		118	C-400.02	218		318		418		518		618	C-400.03	718	C-400.03	818	C-400.03	918	
019	C-400.02	119	C-400.02	219		319		419		519		619		719	C-400.03	819	C-400.03	919	
020		120		220		320		420		520		620		720	C-400.03	820		920	
021	C-400.02	121		221	C-400.03	321		421		521		621		721	C-400.03	821		921	
022	C-400.02	122		222	C-400.03	322		422		522		622		722	C-400.03	822		922	
023	C-400.02	123	C-400.02	223	C-400.03	323		423		523		623		723	C-400.03	823		923	
024		124		224		324		424		524		624		724	C-400.03	824		924	
025		125	C-400.02	225		325		425		525		625		725	C-400.03	825		925	
026		126	C-400.02	226		326		426		526		626		726	C-400.03	826		926	
027	C-400.02	127	C-400.02	227	C-400.03	327		427		527		627	C-400.03	727	C-400.03	827		927	
028		128		228	C-400.03	328		428		528		628	C-400.03	728	C-400.03	828		928	
029	C-400.02	129		229	C-400.03	329		429		529		629	C-400.03	729	C-400.03	829		929	
030	C-400.02	130		230	C-400.03	330		430		530		630	C-400.03	730	C-400.03	830		930	
031	C-400.02	131	C-400.02	231	C-400.03	331		431		531		631	C-400.03	731	C-400.03	831		931	
032		132		232	C-400.03	332		432		532		632	C-400.03	732	C-400.03	832		932	
033		133	C-400.02	233	C-400.03	333		433		533		633	C-400.03	733	C-400.03	833		933	
034		134	C-400.02	234	C-400.03	334		434		534		634	C-400.03	734	C-400.03	834		934	
035	C-400.02	135	C 400.02	235	C-400.03	335		435		535	C-400.03	635	C-400.03	735	C-400.03	835		935	
036		136		236	C-400.03	336		436		536	C-400.03	636	C-400.03	736	C-400.03	836		936	
037	C-400.02	137		237	C-400.03	337		437		537	C-400.03	637	C-400.03	737	C-400.03	837		937	
038	C-400.02	138		238	C-400.03	338		438		538	C-400.03	638	C-400.03	738	C-400.03	838		938	
039	C-400.02	139	C-400.02	239	C-400.03	339		439		539	C-400.03	639	C-400.03	739	C-400.03	839		939	
040		140		240	C-400.03	340		440		540	C-400.03	640	C-400.03	740	C-400.03	840		940	
041		141	C-400.02	241	C-400.03	341		441		541	C-400.03	641	C-400.03	741	C-400.03	841		941	
042		142	C-400.02	242	C-400.03	342		442		542	C-400.03	642	C-400.03	742	C-400.03	842		942	
043	C-400.02	143	C-400.02	243	C-400.03	343		443		543	C-400.03	643	C-400.03	743	C-400.03	843		943	
044		144		244	C-400.03	344		444		544	C-400.03	644	C-400.03	744	C-400.03	844		944	
045	C-400.02	145		245	C-400.03	345		445		545	C-400.03	645	C-400.03	745	C-400.03	845		945	
046	C-400.02	146		246	C-400.03	346		446		546	C-400.03	646	C-400.03	746	C-400.03	846		946	
047	C-400.02	147	C-400.02	247	C-400.03	347		447		547	C-400.03	647	C-400.03	747	C-400.03	847		947	
048		148		248	C-400.03	348		448		548	C-400.03	648	C-400.03	748	C-400.03	848		948	
049		149	C-400.02	249	C-400.03	349		449		549	C-400.03	649	C-400.03	749	C-400.03	849		949	
050		150	C-400.02	250	C-400.03	350		450		550	C-400.03	650	C-400.03	750	C-400.03	850		950	
051	C-400.02	151	C-400.02	251	C-400.03	351		451		551	C-400.03	651	C-400.03	751	C-400.03	851		951	
052		152		252	C-400.03	352		452		552	C-400.03	652	C-400.03	752	C-400.03	852		952	
053	C-400.02	153		253	C-400.03	353		453		553	C-400.03	653	C-400.03	753	C-400.03	853		953	
054	C-400.02	154		254	C-400.03	354		454		554	C-400.03	654	C-400.03	754	C-400.03	854		954	
055	C-400.02	155	C-400.02	255	C-400.03	355		455		555	C-400.03	655	C-400.03	755	C-400.03	855		955	
056		156		256	C-400.03	356		456		556	C-400.03	656	C-400.03	756	C-400.03	856		956	
057		157	C-400.02	257	C-400.03	357		457		557	C-400.03	657	C-400.03	757	C-400.03	857		957	
058		158	C-400.02	258	C-400.03	358		458		558	C-400.03	658	C-400.03	758	C-400.03	858		958	
059	C-400.02	159	C-400.02	259	C-400.03	359		459		559	C-400.03	659	C-400.03	759	C-400.03	859		959	
060		160		260	C-400.03	360		460		560	C-400.03	660	C-400.03	760	C-400.03	860		960	
061	C-400.02	161		261	C-400.03	361		461		561	C-400.03	661	C-400.03	761	C-400.03	861		961	
062	C-400.02	162		262	C-400.03	362		462		562	C-400.03	662	C-400.03	762	C-400.03	862		962	
063	C-400.02	163	C-400.02	263	C-400.03	363		463		563	C-400.03	663	C-400.03	763	C-400.03	863		963	
064		164		264	C-400.03	364		464		564	C-400.03	664	C-400.03	764	C-400.03	864		964	
065		165	C-400.02	265	C-400.03	365		465		565	C-400.03	665	C-400.03	765	C-400.03	865		965	
066		166	C-400.02	266	C-400.03	366		466		566	C-400.03	666	C-400.03	766	C-400.03	866		966	
067	C-400.02	167	C-400.02	267	C-400.03	367		467		567	C-400.03	667	C-400.03	767	C-400.03	867		967	
068		168		268	C-400.03	368		468		568	C-400.03	668	C-400.03	768	C-400.03	868		968	
069	C-400.02	169		269	C-400.03	369		469		569	C-400.03	669	C-400.03	769	C-400.03	879		969	
070	C-400.02	170		270	C-400.03	370		470		570	C-400.03	670	C-400.03	770	C-400.03	870		970	
071	C-400.02	171	C-400.02	271	C-400.03	371		471		571	C-400.03	671	C-400.03	771	C-400.03	871		971	
072		172		272	C-400.03	372		472		572	C-400.03	672	C-400.03	772	C-400.03	872		972	
073		173	C-400.02	273	C-400.03	373		473		573	C-400.03	673	C-400.03	773	C-400.03	873		973	
074		174	C-400.02	274	C-400.03	374		474		574	C-400.03	674	C-400.03	774	C-400.03	874		974	
075	C-400.02	175	C-400.02	275	C-400.03	375		475		575	C-400.03	675	C-400.03	775	C-400.03	875		975	
076		176		276	C-400.03	376		476		576	C-400.03	676	C-400.03	776	C-400.03	876		976	
077	C-400.02	177		277	C-400.03	377		477		577	C-400.03	677	C-400.03	777	C-400.03	877		977	
078	C-400.02	178		278	C-400.03	378		478		578	C-400.03	678	C-400.03	778	C-400.03	878		978	
079	C-400.02	179	C-400.02	279	C-400.03	379		479		579	C-400.03	679	C-400.03	779	C-400.03	879		979	
080		180		280	C-400.03	380		480		580	C-400.03	680	C-400.03	780	C-400.03	880		980	
081		181	C-400.02	281	C-400.03	381		481		581	C-400.03	681	C-400.03	781	C-400.03	881		981	
082		182	C-400.02	282	C-400.03	382		482		582	C-400.03	682	C-400.03	782	C-400.03	882		982	
083	C-400.02	183	C-400.02	283	C-400.03	383		483		583	C-400.03	683	C-400.03	783	C-400.03	883		983	
084		184		284	C-400.03	384		484		584	C-400.03	684	C-400.03	784	C-400.03	884		984	
085	C-400.02	185		285	C-400.03	385		485		585	C-400.03	685	C-400.03	785	C-400.03	885		985	
086	C-400.02	186		286	C-400.03	386		486		586	C-400.03	686	C-400.03	786	C-400.03	886		986	
087	C-400.02	187	C-400.02	287	C-400.03	387		487		587	C-400.03	687	C-400.03	787	C-400.03	887		987	
088		188		288	C-400.03	388		488		588	C-400.03	688	C-400.03	788	C-400.03	888		988	
089		189	C-400.02	289	C-400.03	389		489		589	C-400.03	689	C-400.03	789	C-400.03	889		989	
090		190	C-400.02	290	C-400.03	390		490		590	C-400.03	690	C-400.03	790	C-400.03	890		990	
091	C-400.02	191	C-400.02	291	C-400.03	391		491		591	C-400.03	691	C-400.03	791	C-400.03	891		991	
092		192		292	C-400.03	392		492		592	C-400.03	692	C-400.03	792	C-400.03	892		992	
093	C-400.02	193		293	C-400.03	393		493		593	C-400.03	693	C-400.03	793	C-400.03	893		993	
094	C-400.02	194		294	C 400.03	394		494		594	C-400.03	694	C-400.03	794	C-400.03	894		994	
095	C-400.02	195	C-400.02	295	C-400.03	395		495		595	C-400.03	695	C-400.03	795	C-400.03	895		995	
096		196		296	C-400.03	396		496		596	C-400.03	696	C-400.03	796	C-400.03	896		996	
097		197	C-400.02	297	C-400.03	397		497		597	C-400.03	697	C-400.03	797	C-400.03	897		997	
098		198	C-400.02	298	C-400.03	398		498		598	C-400.03	698	C-400.03	798	C-400.03	898		998	
099	C-400.02	199	C-400.02	299	C-400.03	399		499		599	C-400.03	699	C-400.03	799	C-400.03	899		999	

FORD MOTOR COMPANY
STANDARD PARTS

INDEX

THE TWO NUMBERS AT THE TOP OF THE NO. COLUMN ARE THE FIRST DIGITS OF THE FIVE DIGIT NUMBER AND FOLLOWING NUMBERS IN THE COLUMN ARE THE LAST THREE DIGITS OF THE FIVE DIGIT NUMBER.

No.	Page	No.	Page	No.	Page	No.	Page	No.	Page	No.	Page	No.	Page	No.	Page	No.	Page	No.	Page
30		30		30		30		30		30		30		30		30		30	
000	C-400.12	100	C-400.12	200		300		400		500		600		700		800		900	
001	C-400.12	101		201		301		401		501		601		701	C-400.12	801		901	
002	C-400.12	102	C-400.12	202		302		402		502		602		702		802		902	
003		103	C-400.12	203		303		403		503		603	C-400.12	703	C-400.12	803		903	
004	C-400.12	104	C-400.12	204		304		404		504		604		704	C-400.12	804		904	
005	C-400.12	105	C-400.12	205		305		405		505		605		705	C-400.12	805		905	
006	C-400.12	106	C-400.12	206		306		406		506		606		706		806		906	
007	C-400.12	107	C-400.12	207		307		407		507		607		707		807		907	
008		108	C-400.12	208	C-400.12	308		408		508		608	C-400.12	708		808		908	
009	C-400.12	109		209	C-400.12	309		409		509		609		709	C-400.12	809		909	
010	C-400.12	110	C-400.12	210	C-400.12	310		410		510		610		710		810		910	
011	C-400.12	111	C-400.12	211		311		411		511	C-400.12	611		711	C-400.12	811		911	
012	C-400.12	112	C-400.12	212	C-400.12	312		412		512		612		712	C-400.12	812		912	
013		113	C-400.12	213	C-400.12	313		413		513	C-400.12	613	C-400.12	713	C-400.12	813		913	
014	C-400.12	114	C-400.12	214	C-400.12	314		414		514	C-400.12	614		714		814		914	
015	C-400.12	115	C-400.12	215	C-400.12	315		415		515	C-400.12	615	C-400.12	715		815		915	
016	C-400.12	116	C-400.12	216		316		416		516		616	C-400.12	716		816		916	
017	C-400.12	117		217		317		417		517		617	C-400.12	717	C-400.12	817		917	
018	C-400.12	118	C-400.12	218		318		418		518		618		718		818		918	
019	C-400.12	119	C-400.12	219		319		419		519		619		719	C-400.12	819		919	
020	C-400.12	120	C-400.12	220		320		420		520		620		720	C-400.12	820		920	
021		121	C-400.12	221		321		421		521		621	C-400.12	721	C-400.12	821		921	
022	C-400.12	122	C-400.12	222		322		422		522		622		722		822		922	
023	C-400.12	123		223		323		423		523		623	C-400.12	723	C-400.12	823		923	
024	C-400.12	124	C-400.12	224	C-400.12	324		424		524		624	C-400.12	724		824		924	
025	C-400.12	125	C-400.12	225	C-400.12	325		425		525		625	C-400.12	725	C-400.12	825		925	
026	C-400.12	126	C-400.12	226	C-400.12	326		426		526		626		726	C-400.12	826		926	
027	C-400.12	127	C-400.12	227		327		427		527	C-400.12	627		727	C-400.12	827		927	
028	C-400.12	128	C-400.12	228	C-400.12	328		428		528		628		728		828		928	
029		129		229	C-400.12	329		429		529	C-400.12	629	C-400.12	729	C-400.12	829		929	
030	C-400.12	130	C-400.12	230	C-400.12	330		430		530	C-400.12	630		730		830		930	
031	C-400.12	131	C-400.12	231	C-400.12	331		431		531	C-400.12	631	C-400.12	731	C-400.12	831		931	
032	C-400.12	132	C-400.12	232	C-400.12	332		432		532		632	C-400.12	732	C-400.12	832		932	
033	C-400.12	133	C-400.12	233	C-400.12	333		433		533		633	C-400.12	733	C-400.12	833		933	
034	C-400.12	134	C-400.12	234	C-400.12	334		434		534		634		734		834		934	
035	C-400.12	135		235		335		435		535	C-400.12	635		735	C-400.12	835		935	
036	C-400.12	136	C-400.12	236	C-400.12	336		436		536		636		736		836		936	
037		137	C-400.12	237	C-400.12	337		437		537	C-400.12	637	C-400.12	737	C-400.12	837		937	
038	C-400.12	138	C-400.12	238	C-400.12	338		438		538	C-400.12	638		738	C-400.12	838		938	
039	C-400.12	139	C-400.12	239	C-400.12	339		439		539	C-400.12	639	C-400.12	739	C-400.12	839		939	
040	C-400.12	140		240	C-400.12	340		440		540		640	C-400.12	740		840		940	
041	C-400.12	141		241	C-400.12	341		441		541		641	C-400.12	741		841		941	
042	C-400.12	142		242	C-400.12	342		442		542		642		742		842		942	
043	C-400.12	143		243		343		443		543	C-400.12	643		743		843		943	
044	C-400.12	144		244	C-400.12	344		444		544		644		744		844		944	
045		145		245	C-400.12	345		445		545	C-400.12	645	C-400.12	745		845		945	
046	C-400.12	146		246	C-400.12	346		446		546	C-400.12	646		746		846		946	
047	C-400.12	147		247	C-400.12	347		447		547	C-400.12	647	C-400.12	747		847		947	
048	C-400.12	148		248	C-400.12	348		448		548		648	C-400.12	748		848		948	
049	C-400.12	149		249	C-400.12	349		449		549		649	C-400.12	749		849		949	
050		150	C-400.12	250	C-400.12	350		450		550		650		750		850		950	
051		151	C-400.12	251		351		451		551	C-400.12	651		751		851		951	
052		152	C-400.12	252	C-400.12	352		452		552		652		752		852		952	
053		153		253	C-400.12	353		453	C-400.12	553	C-400.12	653		753		853		953	
054		154	C-400.12	254	C-400.12	354		454		554	C-400.12	654		754		854		954	
055		155	C-400.12	255	C-400.12	355		455		555	C-400.12	655		755		855		955	
056		156	C-400.12	256	C-400.12	356		456		556		656		756		856		956	
057		157	C-400.12	257	C-400.12	357		457		557		657		757		857		957	
058	C-400.12	158		258	C-400.12	358		458	C-400.12	558		658		758		858		958	
059	C-400.12	159	C-400.12	259		359		459		559	C-400.12	659		759		859		959	
060	C-400.12	160	C-400.12	260	C-400.12	360		460		560		660		760		860		960	
061		161	C-400.12	261	C-400.12	361		461		561	C-400.12	661	C-400.12	761		861		961	
062	C-400.12	162	C-400.12	262	C-400.12	362		462		562	C-400.12	662		762		862		962	
063	C-400.12	163		263	C-400.12	363		463	C-400.12	563	C-400.12	663	C-400.12	763		863		963	
064	C-400.12	164	C-400.12	264	C-400.12	364		464		564		664	C-400.12	764		864		964	
065	C-400.12	165	C-400.12	265	C-400.12	365		465	C-400.12	565		665	C-400.12	765		865		965	
066		166	C-400.12	266	C-400.12	366		466	C-400.12	566		666		766		866		966	
067		167	C-400.12	267		367		467	C-400.12	567	C-400.12	667		767		867		967	
068		168	C-400.12	268	C-400.12	368		468		568		668		768		868		968	
069		169	C-400.12	269	C-400.12	369		469		569	C-400.12	669		769		879		969	
070		170	C-400.12	270	C-400.12	370		470		570	C-400.12	670		770		870		970	
071		171		271	C-400.12	371		471	C-400.12	571	C-400.12	671		771		871		971	
072		172	C-400.12	272	C-400.12	372		472		572		672		772		872		972	
073		173	C-400.12	273		373		473	C-400.12	573	C-400.12	673		773		873		973	
074	C-400.12	174	C-400.12	274	C-400.12	374		474	C-400.12	574		674		774		874		974	
075	C-400.12	175	C-400.12	275	C-400.12	375		475	C-400.12	575	C-400.12	675		775		875		975	
076	C-400.12	176	C-400.12	276	C-400.12	376		476		576	C-400.12	676		776		876		976	
077		177	C-400.12	277	C-400.12	377		477		577	C-400.12	677	C-400.12	777		877		977	
078	C-400.12	178	C-400.12	278	C-400.12	378		478		578		678		778		878		978	
079	C-400.12	179		279		379		479	C-400.12	579	C-400.12	679	C-400.12	779		879		979	
080	C-400.12	180	C-400.12	280	C-400.12	380		480		580		680	C-400.12	780		880		980	
081	C-400.12	181	C-400.12	281	C-400.12	381		481	C-400.12	581	C-400.12	681	C-400.12	781		881		981	
082	C-400.12	182	C-400.12	282	C-400.12	382		482	C-400.12	582	C-400.12	682		782		882		982	
083	C-400.12	183	C-400.12	283	C-400.12	383		483	C-400.12	583	C-400.12	683		783		883		983	
084	C-400.12	184	C-400.12	284	C-400.12	384		484		584		684		784		884		984	
085		185	C-400.12	285		385		485		585	C-400.12	685	C-400.12	785		885		985	
086	C-400.12	186	C-400.12	286	C-400.12	386		486		586		686		786		886		986	
087	C-400.12	187		287	C-400.12	387		487	C-400.12	587	C-400.12	687	C-400.12	787		887		987	
088	C-400.12	188	C-400.12	288	C-400.12	388		488		588	C-400.12	688	C-400.12	788		888		988	
089	C-400.12	189	C-400.12	289	C-400.12	389		489	C-400.12	589	C-400.12	689	C-400.12	789		889		989	
090	C-400.12	190	C-400.12	290		390		490	C-400.12	590		690		790		890		990	
091	C-400.12	191	C-400.12	291		391		491	C-400.12	591		691		791		891		991	
092	C-400.12	192	C-400.12	292		392		492		592		692		792		892		992	
093		193	C-400.12	293		393		493		593		693	C-400.12	793		893		993	
094	C-400.12	194	C-400.12	294		394		494		594		694		794		894		994	
095	C-400.12	195		295		395		495	C-400.12	595		695	C-400.12	795		895		995	
096	C-400.12	196	C-400.12	296		396		496		596		696	C-400.12	796		896		996	
097	C-400.12	197	C-400.12	297		397		497	C-400.12	597		697	C-400.12	797		897		997	
098	C-400.12	198	C-400.12	298		398		498	C-400.12	598		698		798		898		998	
099	C-400.12	199	C-400.12	299		399		499	C-400.12	599		699		799		899		999	

FORD MOTOR COMPANY
STANDARD PARTS

INDEX

THE TWO NUMBERS AT THE TOP OF THE NO. COLUMN ARE THE FIRST DIGITS OF THE FIVE DIGIT NUMBER AND FOLLOWING NUMBERS IN THE COLUMN ARE THE LAST THREE DIGITS OF THE FIVE DIGIT NUMBER.

No.	Page	No.	Page	No.	Page	No.	Page	No.	Page	No.	Page	No.	Page	No.	Page	No.	Page	No.	Page
31		31		31		31		31		31		31		31		31		31	
000		100		200	C-100.01	300	C-100.01	400	C-100.01	500		600	C-100.01	700	C-100.01	800	C-100.01	900	D-321.01
001		101		201	C-100.01	301	C-100.01	401		501	D-121.02	601		701		801		901	D-321.01
002		102		202	C-100.01	302	C-100.01	402		502	D-121.02	602		702	C-100.01	802		902	D-321.01
003		103		203	C-100.01	303	C-100.01	403		503		603		703	C-100.01	803		903	D-321.01
004		104		204	C-100.01	304	C-100.01	404		504	D-161.02	604	C-100.01	704	C-100.01	804	C-100.01	904	D-321.01
005		105		205	C-100.01	305	C-100.01	405		505		605		705		805		905	D-321.01
006		106		206	C-100.01	306	C-100.01	406		506	D-151.02	606	C-100.01	706		806	C-100.01	906	D-321.01
007		107	C-100.01	207	C-100.01	307	C-100.01	407		507	D-151.02	607	C-100.01	707		807	C-100.01	907	D-321.01
008		108	C-100.01	208	C-100.01	308	C-100.01	408		508	D-151.02	608	C-100.01	708	C-100.01	808	C-100.01	908	D-321.01
009		109	C-100.01	209	C-100.01	309	C-100.01	409		509		609		709		809		909	D-321.01
010		110		210	C-100.01	310	C-100.01	410		510		610		710	C-100.01	810		910	D-321.01
011		111	C-100.01	211	C-100.01	311	C-100.01	411		511	D-141.02	611		711	C-100.01	811		911	D-321.01
012		112	C-100.01	212	C-100.01	312	C-100.01	412	C-100.01	512	D-141.02	612	C-100.01	712	C-100.01	812		912	D-321.01
013		113	C-100.01	213	C-100.01	313	C-100.01	413	C-100.01	513		613		713		813		913	D-321.01
014		114	C-100.01	214	C-100.01	314	C-100.01	414	C-100.01	514	D-111.02	614	C-100.01	714		814		914	D-321.01
015		115		215	C-100.01	315	C-100.01	415	C-100.01	515	D-111.02	615	C-100.01	715		815		915	D-321.01
016		116		216	C-100.01	316	C-100.01	416	C-100.01	516	D-111.02	616	C-100.01	716	C-100.01	816		916	D-321.01
017		117		217	C-100.01	317	C-100.01	417	C-100.01	517		617		717		817		917	D-321.01
018		118		218	C-100.01	318	C-100.01	418	C-100.01	518	D-130.02	618		718	C-100.01	818		918	D-321.01
019		119		219	C-100.01	319	C-100.01	419	C-100.01	519	D-130.02	619		719	C-100.01	819		919	D-321.01
020		120		220	C-100.01	320	C-100.01	420	C-100.01	520	D-130.02	620	C-100.01	720	C-100.01	820		920	D-321.01
021		121		221	C-100.01	321	C-100.01	421	C-100.01	521		621		721		821		921	D-321.01
022		122		222	C-100.01	322	C-100.01	422	C-100.01	522	D-131.02	622	C-100.01	722		822		922	D-321.01
023		123	C-100.01	223	C-100.01	323	C-100.01	423		523	D-131.02	623	C-100.01	723		823		923	D-321.01
024		124	C-100.01	224	C-100.01	324	C-100.01	424		524	D-131.02	624	C-100.01	724	C-100.01	824		924	D-321.01
025	C-100.01	125	C-100.01	225	C-100.01	325	C-100.01	425		525		625		725		825		925	D-321.01
026	C-100.01	126		226	C-100.01	326	C-100.01	426		526	D-132.02	626		726	C-100.01	826		926	D-321.01
027	C-100.01	127	C-100.01	227	C-100.01	327	C-100.01	427		527	D-132.02	627		727	C-100.01	827		927	D-321.01
028		128	C-100.01	228	C-100.01	328	C-100.01	428		528	D-132.02	628	C-100.01	728	C-100.01	828		928	D-321.01
029	C-100.01	129	C-100.01	229	C-100.01	329	C-100.01	429		529		629		729		829		929	D-321.01
030	C-100.01	130	C-100.01	230	C-100.01	330	C-100.01	430		530		630	C-100.01	730		830		930	D-321.01
031	C-100.01	131	C-100.01	231	C-100.01	331	C-100.01	431		531	D-121.02	631	C-100.01	731		831		931	D-321.01
032	C-100.01	132	C-100.01	232	C-100.01	332	C-100.01	432		532	D-121.02	632	C-100.01	732	C-100.01	832		932	D-321.01
033		133	C-100.01	233	C-100.01	333	C-100.01	433		533		633		733		833		933	D-321.01
034	C-100.01	134		234	C-100.01	334	C-100.01	434	C-100.01	534	D-161.02	634		734	C-100.01	834		934	D-321.01
035	C-100.01	135	C-100.01	235	C-100.01	335	C-100.01	435	C-100.01	535	D-161.02	635		735	C-100.01	835		935	D-321.01
036	C-100.01	136	C-100.01	236	C-100.01	336	C-100.01	436	C-100.01	536	D-161.02	636	C-100.01	736	C-100.01	836		936	D-321.01
037	C-100.01	137	C-100.01	237	C-100.01	337	C-100.01	437	C-100.01	537		637		737		837		937	D-321.01
038		138	C-100.01	238	C-100.01	338	C-100.01	438	C-100.01	538	D-151.02	638	C-100.01	738		838		938	D-321.01
039	C-100.01	139	C-100.01	239	C-100.01	339	C-100.01	439	C-100.01	539	D-151.02	639	C-100.01	739		839		939	D-321.01
040	C-100.01	140	C-100.01	240	C-100.01	340	C-100.01	440	C-100.01	540	D-151.02	640	C-100.01	740	C-100.01	840		940	D-321.01
041	C-100.01	141	C-100.01	241	C-100.01	341	C-100.01	441	C-100.01	541		641		741		841		941	D-321.01
042	C-100.01	142		242	C-100.01	342	C-100.01	442	C-100.01	542		642		742	C-100.01	842		942	D-321.01
043	C-100.01	143	C-100.01	243	C-100.01	343	C-100.01	443	C-100.01	543	D-141.02	643		743	C-100.01	843		943	D-321.01
044	C-100.01	144	C-100.01	244	C-100.01	344	C-100.01	444	C-100.01	544	D-141.02	644	C-100.01	744	C-100.01	844		944	D-321.01
045	C-100.01	145	C-100.01	245	C-100.01	345	C-100.01	445	C-100.01	545		645		745		845		945	D-321.01
046		146	C-100.01	246	C-100.01	346	C-100.01	446	C-100.01	546	D-111.02	646	C-100.01	746		846		946	D-321.01
047	C-100.01	147	C-100.01	247	C-100.01	347	C-100.01	447	C-100.01	547	D-111.02	647	C-100.01	747		847		947	D-321.01
048	C-100.01	148	C-100.01	248	C-100.01	348	C-100.01	448	C-100.01	548	D-111.02	648	C-100.01	748	C-100.01	848		948	D-321.01
049	C-100.01	149	C-100.01	249		349	C-100.01	449	C-100.01	549		649		749		849		949	D-321.01
050	C-100.01	150		250		350	C-100.01	450	C-100.01	550	D-130.02	650		750	C-100.01	850	D-321.01	950	D-321.01
051	C-100.01	151	C-100.01	251		351	C-100.01	451	C-100.01	551	D-130.02	651		751	C-100.01	851	D-321.01	951	D-321.01
052	C-100.01	152	C-100.01	252		352	C-100.01	452	C-100.01	552	D-130.02	652		752	C-100.01	852	D-321.01	952	D-321.01
053	C-100.01	153	C-100.01	253		353	C-100.01	453	C-100.01	553		653		753		853	D-321.01	953	D-321.01
054		154	C-100.01	254		354	C-100.01	454	C-100.01	554	D-131.02	654		754		854	D-321.01	954	D-321.01
055	C-100.01	155	C-100.01	255		355	C-100.01	455	C-100.01	555	D-131.02	655		755		855	D-321.01	955	D-321.01
056	C-100.01	156	C-100.01	256		356	C-100.01	456	C-100.01	556	D-131.02	656		756	C-100.01	856	D-321.01	956	D-321.01
057	C-100.01	157	C-100.01	257		357	C-100.01	457	C-100.01	557		657		757		857	D-321.01	957	D-321.01
058	C-100.01	158		258		358	C-100.01	458	C-100.01	558	D-132.02	658		758	C-100.01	858	D-321.01	958	D-321.01
059	C-100.01	159	C-100.01	259		359	C-100.01	459	C-100.01	559	D-132.02	659		759	C-100.01	859	D-321.01	959	D-321.01
060	C-100.01	160	C-100.01	260		360	C-100.01	460	C-100.01	560	D-132.02	660	C-100.01	760	C-100.01	860	D-321.01	960	D-321.01
061	C-100.01	161	C-100.01	261		361	C-100.01	461	C-100.01	561		661		761		861	D-321.01	961	D-321.01
062		162	C-100.01	262		362	C-100.01	462	C-100.01	562		662	C-100.01	762		862	D-321.01	962	D-321.01
063	C-100.01	163	C-100.01	263		363	C-100.01	463	C-100.01	563		663	C-100.01	763		863	D-321.01	963	D-321.01
064	C-100.01	164	C-100.01	264		364	C-100.01	464	C-100.01	564		664	C-100.01	764	C-100.01	864	D-321.01	964	D-321.01
065	C-100.01	165	C-100.01	265		365	C-100.01	465	C-100.01	565		665		765		865	D-321.01	965	D-321.01
066	C-100.01	166		266		366	C-100.01	466	C-100.01	566		666		766	C-100.01	866	D-321.01	966	D-321.01
067	C-100.01	167	C-100.01	267		367	C-100.01	467		567		667		767	C-100.01	867	D-321.01	967	D-321.01
068	C-100.01	168	C-100.01	268		368	C-100.01	468		568		668		768	C-100.01	868	D-321.01	968	D-321.01
069	C-100.01	169	C-100.01	269		369	C-100.01	469	D-121.01	569		669		769		879	D-321.01	969	D-321.01
070		170	C-100.01	270		370	C-100.01	470	D-121.01	570		670		770		870	D-321.01	970	D-321.01
071	C-100.01	171	C-100.01	271		371	C-100.01	471		571		671		771		871	D-321.01	971	D-321.01
072	C-100.01	172	C-100.01	272		372	C-100.01	472	D-161.01	572		672		772	C-100.01	872	D-321.01	972	D-321.01
073	C-100.01	173	C-100.01	273		373	C-100.01	473	D-161.01	573		673		773		873	D-321.01	973	D-321.01
074	C-100.01	174		274		374	C-100.01	474	D-161.01	574		674		774	C-100.01	874	D-321.01	974	D-321.01
075	C-100.01	175	C-100.01	275		375	C-100.01	475		575		675		775	C-100.01	875	D-321.01	975	D-321.01
076	C-100.01	176	C-100.01	276		376	C-100.01	476	D-151.01	576		676	C-100.01	776	C-100.01	876	D-321.01	976	D-321.01
077	C-100.01	177	C-100.01	277		377	C-100.01	477	D-151.01	577		677		777		877	D-321.01	977	D-321.01
078		178	C-100.01	278		378	C-100.01	478	D-151.01	578	C-100.01	678	C-100.01	778		878	D-321.01	978	D-321.01
079	C-100.01	179	C-100.01	279		379	C-100.01	479		579		679	C-100.01	779		879	D-321.01	979	D-321.01
080	C-100.01	180	C-100.01	280		380	C-100.01	480		580		680	C-100.01	780	C-100.01	880	D-321.01	980	D-321.01
081	C-100.01	181	C-100.01	281		381	C-100.01	481	D-141.01	581		681		781		881	D-321.01	981	D-321.01
082	C-100.01	182	C-100.01	282		382	C-100.01	482	D-141.01	582		682		782	C-100.01	882	D-321.01	982	D-321.01
083	C-100.01	183	C-100.01	283		383	C-100.01	483		583	C-100.01	683		783	C-100.01	883	D-321.01	983	D-321.01
084	C-100.01	184	C-100.01	284		384	C-100.01	484	D-111.01	584		684	C-100.01	784	C-100.01	884	D-321.01	984	D-321.01
085	C-100.01	185	C-100.01	285		385	C-100.01	485	D-111.01	585		685		785		885	D-321.01	985	D-321.01
086		186	C-100.01	286		386	C-100.01	486	D-111.01	586		686	C-100.01	786		886	D-321.01	986	D-321.01
087	C-100.01	187	C-100.01	287		387	C-100.01	487		587		687	C-100.01	787		887	D-321.01	987	D-321.01
088	C-100.01	188	C-100.01	288		388	C-100.01	488	D-130.01	588	C-100.01	688	C-100.01	788	C-100.01	888	D-321.01	988	D-321.01
089	C-100.01	189	C-100.01	289		389	C-100.01	489	D-130.01	589		689		789		889	D-321.01	989	D-321.01
090	C-100.01	190	C-100.01	290		390	C-100.01	490	D-130.01	590	C-100.01	690		790	C-100.01	890	D-321.01	990	D-321.01
091	C-100.01	191	C-100.01	291	C-100.01	391	C-100.01	491		591	C-100.01	691		791	C-100.01	891	D-321.01	991	D-321.01
092	C-100.01	192	C-100.01	292	C-100.01	392	C-100.01	492	D-131.01	592	C-100.01	692	C-100.01	792	C-100.01	892	D-321.01	992	D-321.01
093	C-100.01	193	C-100.01	293	C-100.01	393	C-100.01	493	D-131.01	593		693		793		893	D-321.01	993	D-321.01
094	C-100.01	194	C-100.01	294	C-100.01	394	C-100.01	494	D-131.01	594		694	C-100.01	794		894	D-321.01	994	D-321.01
095	C-100.01	195	C-100.01	295	C-100.01	395	C-100.01	495		595		695	C-100.01	795		895	D-321.01	995	D-321.01
096	C-100.01	196	C-100.01	296	C-100.01	396	C-100.01	496	D-132.01	596	C-100.01	696	C-100.01	796	C-100.01	896	D-321.01	996	D-321.01
097	C-100.01	197	C-100.01	297	C-100.01	397	C-100.01	497	D-132.01	597		697		797		897	D-321.01	997	D-321.01
098		198	C-100.01	298	C-100.01	398	C-100.01	498	D-132.01	598	C-100.01	698		798	C-100.01	898	D-321.01	998	D-321.01
099		199	C-100.01	299	C-100.01	399	C-100.01	499		599	C-100.01	699		799	C-100.01	899	D-321.01	999	D-321.01

FORD MOTOR COMPANY
STANDARD PARTS

INDEX

THE TWO NUMBERS AT THE TOP OF THE NO. COLUMN ARE THE FIRST DIGITS OF THE FIVE DIGIT NUMBER AND FOLLOWING NUMBERS IN THE COLUMN ARE THE LAST THREE DIGITS OF THE FIVE DIGIT NUMBER.

No.	Page	No.	Page	No.	Page	No.	Page	No.	Page	No.	Page	No.	Page	No.	Page	No.	Page	No.	Page
32		32		32		32		32		32		32		32		32		32	
000	D-321.01	100	D-321.01	200	D-321.01	300	D-361.01	400		500	D-341.02	600	D-341.02	700	D-341.02	800	D-121.01	900	
001	D-321.01	101	D-321.01	201	D-321.01	301	D-361.01	401		501	D-341.02	601	D-341.02	701	D-341.02	801	D-121.01	901	
002	D-321.01	102	D-321.01	202	D-321.01	302	D-361.01	402		502	D-341.02	602	D-341.02	702	D-341.02	802	D-121.01	902	
003	D-321.01	103	D-321.01	203	D-321.01	303	D-361.01	403		503	D-341.02	603	D-341.02	703	D-341.02	803	D-121.01	903	
004	D-321.01	104	D-321.01	204	D-321.01	304	D-361.01	404		504	D-341.02	604	D-341.02	704	D-341.02	804	D-121.01	904	
005	D-321.01	105	D-321.01	205	D-321.01	305	D-361.01	405		505	D-341.02	605	D-341.02	705	D-341.02	805	D-121.01	905	D-151.01
006	D-321.01	106	D-321.01	206	D-321.01	306	D-361.01	406		506	D-341.02	606	D-341.02	706	D-341.02	806	D-121.01	906	D-151.01
007	D-321.01	107	D-321.01	207	D-321.01	307	D-361.01	407		507	D-341.02	607	D-341.02	707	D-341.02	807	D-121.01	907	D-151.01
008	D-321.01	108	D-321.01	208	D-321.01	308	D-361.01	408		508	D-341.02	608	D-341.02	708	D-341.02	808	D-121.01	908	D-151.01
009	D-321.01	109	D-321.01	209	D-321.01	309	D-361.01	409		509	D-341.02	609	D-341.02	709	D-341.02	809	D-121.01	909	D-151.01
010	D-321.01	110	D-321.01	210	D-321.01	310	D-361.01	410	D-341.02	510	D-341.02	610	D-341.02	710	D-341.02	810	D-121.01	910	
011	D-321.01	111	D-321.01	211	D-321.01	311	D-361.01	411	D-341.02	511	D-341.02	611	D-341.02	711	D-341.02	811	D-121.01	911	
012	D-321.01	112	D-321.01	212	D-321.01	312	D-361.01	412	D-341.02	512	D-341.02	612	D-341.02	712	D-341.02	812	D-121.01	912	D-151.01
013	D-321.01	113	D-321.01	213	D-321.01	313	D-361.01	413	D-341.02	513	D-341.02	613	D-341.02	713	D-341.02	813	D-121.01	913	D-151.01
014	D-321.01	114	D-321.01	214	D-321.01	314	D-361.01	414	D-341.02	514	D-341.02	614	D-341.02	714	D-341.02	814	D-121.01	914	D-151.01
015	D-321.01	115	D-321.01	215	D-321.01	315	D-361.01	415	D-341.02	515	D-341.02	615	D-341.02	715	D-341.02	815	D-121.01	915	D-151.01
016	D-321.01	116	D-321.01	216	D-321.01	316	D-361.01	416	D-341.02	516	D-341.02	616	D-341.02	716	D-341.02	816	D-121.01	916	D-151.01
017	D-321.01	117	D-321.01	217	D-321.01	317	D-361.01	417	D-341.02	517	D-341.02	617	D-341.02	717	D-341.02	817	D-121.01	917	D-151.01
018	D-321.01	118	D-321.01	218	D-321.01	318	D-361.01	418	D-341.02	518	D-341.02	618	D-341.02	718	D-341.02	818	D-121.01	918	D-151.01
019	D-321.01	119	D-321.01	219	D-321.01	319	D-361.01	419	D-341.02	519	D-341.02	619	D-341.02	719	D-341.02	819	D-121.01	919	D-151.01
020	D-321.01	120	D-321.01	220	D-321.01	320	D-361.01	420	D-341.02	520	D-341.02	620	D-341.02	720	D-341.02	820	D-121.01	920	D-151.01
021	D-321.01	121	D-321.01	221	D-321.01	321	D-361.01	421	D-341.02	521	D-341.02	621	D-341.02	721	D-341.02	821	D-121.01	921	D-151.01
022	D-321.01	122	D-321.01	222	D-321.01	322	D-361.01	422	D-341.02	522	D-341.02	622	D-341.02	722	D-341.02	822	D-121.01	922	D-151.01
023	D-321.01	123	D-321.01	223	D-321.01	323	D-361.01	423	D-341.02	523	D-341.02	623	D-341.02	723	D-341.02	823	D-121.01	923	D-151.01
024	D-321.01	124	D-321.01	224	D-321.01	324	D-361.01	424	D-341.02	524	D-341.02	624	D-341.02	724	D-341.02	824	D-121.01	924	D-151.01
025		125	D-321.01	225	D-361.01	325	D-361.01	425	D-341.02	525	D-341.02	625	D-341.02	725	D-341.02	825	D-121.01	925	D-151.01
026		126	D-321.01	226	D-361.01	326	D-361.01	426	D-341.02	526	D-341.02	626	D-341.02	726	D-341.02	826	D-121.01	926	D-151.01
027		127	D-321.01	227	D-361.01	327	D-361.01	427	D-341.02	527	D-341.02	627	D-341.02	727	D-341.02	827	D-121.01	927	D-151.01
028		128	D-321.01	228	D-361.01	328	D-361.01	428	D-341.02	528	D-341.02	628	D-341.02	728	D-341.02	828	D-121.01	928	D-151.01
029		129	D-321.01	229	D-361.01	329	D-361.01	429	D-341.02	529	D-341.02	629	D-341.02	729	D-341.02	829	D-121.01	929	D-151.01
030		130	D-321.01	230	D-361.01	330	D-361.01	430	D-341.02	530	D-341.02	630	D-341.02	730	D-341.02	830	D-121.01	930	D-151.01
031		131	D-321.01	231	D-361.01	331	D-361.01	431	D-341.02	531	D-341.02	631	D-341.02	731	D-341.02	831	D-121.01	931	D-151.01
032		132	D-321.01	232	D-361.01	332	D-361.01	432	D-341.02	532	D-341.02	632	D-341.02	732	D-341.02	832	D-121.01	932	D-151.01
033		133	D-321.01	233	D-361.01	333	D-361.01	433	D-341.02	533	D-341.02	633	D-341.02	733	D-341.02	833	D-121.01	933	D-151.01
034		134	D-321.01	234	D-361.01	334	D-361.01	434	D-341.02	534	D-341.02	634	D-341.02	734	D-341.02	834	D-121.01	934	D-151.01
035		135	D-321.01	235	D-361.01	335	D-361.01	435	D-341.02	535	D-341.02	635	D-341.02	735	D-341.02	835		935	D-151.01
036		136	D-321.01	236	D-361.01	336	D-361.01	436	D-341.02	536	D-341.02	636	D-341.02	736	D-341.02	836		936	D-151.01
037		137	D-321.01	237	D-361.01	337	D-361.01	437	D-341.02	537	D-341.02	637	D-341.02	737	D-341.02	837		937	D-151.01
038		138	D-321.01	238	D-361.01	338	D-361.01	438	D-341.02	538	D-341.02	638	D-341.02	738	D-341.02	838		938	D-151.01
039		139	D-321.01	239	D-361.01	339	D-361.01	439	D-341.02	539	D-341.02	639	D-341.02	739	D-341.02	839		939	D-151.01
040		140	D-321.01	240	D-361.01	340	D-361.01	440	D-341.02	540	D-341.02	640	D-341.02	740	D-341.02	840	D-161.01	940	D-151.01
041		141	D-321.01	241	D-361.01	341	D-361.01	441	D-341.02	541	D-341.02	641	D-341.02	741	D-341.02	841	D-161.01	941	D-151.01
042		142	D-321.01	242	D-361.01	342	D-361.01	442	D-341.02	542	D-341.02	642	D-341.02	742	D-341.02	842	D-161.01	942	D-151.01
043		143	D-321.01	243	D-361.01	343	D-361.01	443	D-341.02	543	D-341.02	643	D-341.02	743	D-341.02	843	D-161.01	943	D-151.01
044		144	D-321.01	244	D-361.01	344	D-361.01	444	D-341.02	544	D-341.02	644	D-341.02	744	D-341.02	844	D-161.01	944	D-151.01
045		145	D-321.01	245	D-361.01	345	D-361.01	445	D-341.02	545	D-341.02	645	D-341.02	745	D-341.02	845		945	D-151.01
046		146	D-321.01	246	D-361.01	346	D-361.01	446	D-341.02	546	D-341.02	646	D-341.02	746	D-341.02	846		946	D-151.01
047		147	D-321.01	247	D-361.01	347	D-361.01	447	D-341.02	547	D-341.02	647	D-341.02	747	D-341.02	847	D-161.01	947	D-151.01
048		148	D-321.01	248	D-361.01	348	D 361.01	448	D-341.02	548	D-341.02	648	D-341.02	748	D-341.02	848	D-161.01	948	D-151.01
049		149	D-321.01	249	D-361.01	349	D-361.01	449	D-341.02	549	D-341.02	649	D-341.02	749	D-341.02	849	D-161.01	949	D-151.01
050	D-321.01	150	D-321.01	250	D-361.01	350	D-361.01	450	D-341.02	550	D-341.02	650	D-341.02	750	D-341.02	850	D-161.01	950	D-151.01
051	D-321.01	151	D-321.01	251	D-361.01	351	D-361.01	451	D-341.02	551	D-341.02	651	D-341.02	751	D-341.02	851	D-161.01	951	D-151.01
052	D-321.01	152	D-321.01	252	D-361.01	352	D-361.01	452	D-341.02	552	D-341.02	652	D-341.02	752	D-341.02	852	D-161.01	952	D-151.01
053	D-321.01	153	D-321.01	253	D-361.01	353	D-361.01	453	D-341.02	553	D-341.02	653	D-341.02	753	D-341.02	853	D-161.01	953	D-151.01
054	D-321.01	154	D-321.01	254	D-361.01	354	D-361.01	454	D-341.02	554	D-341.02	654	D-341.02	754	D-341.02	854	D-161.01	954	D-151.01
055	D-321.01	155	D-321.01	255	D-361.01	355	D-361.01	455	D-341.02	555	D-341.02	655	D-341.02	755	D-341.02	855	D-161.01	955	D-151.01
056	D-321.01	156	D-321.01	256	D-361.01	356	D-361.01	456	D-341.02	556	D-341.02	656	D-341.02	756	D-341.02	856	D-161.01	956	D-151.01
057	D-321.01	157	D-321.01	257	D-361.01	357	D-361.01	457	D-341.02	557	D-341.02	657	D-341.02	757	D-341.02	857	D-161.01	957	D-151.01
058	D-321.01	158	D-321.01	258	D-361.01	358	D-361.01	458	D-341.02	558	D-341.02	658	D-341.02	758	D-341.02	858	D-161.01	958	D-151.01
059	D-321.01	159	D-321.01	259	D-361.01	359	D-361.01	459	D-341.02	559	D-341.02	659	D-341.02	759	D-341.02	859	D-161.01	959	D-151.01
060	D-321.01	160	D-321.01	260	D-361.01	360	D-361.01	460	D-341.02	560	D-341.02	660	D-341.02	760	D-341.02	860	D-161.01	960	D-151.01
061	D-321.01	161	D-321.01	261	D-361.01	361	D-361.01	461	D-341.02	561	D-341.02	661	D-341.02	761	D-341.02	861	D-161.01	961	D-151.01
062	D-321.01	162	D-321.01	262	D-361.01	362	D-361.01	462	D-341.02	562	D-341.02	662	D-341.02	762	D-341.02	862	D-161.01	962	D-151.01
063	D-321.01	163	D-321.01	263	D-361.01	363	D-361.01	463	D-341.02	563	D-341.02	663	D-341.02	763	D-341.02	863	D-161.01	963	D-151.01
064	D-321.01	164	D-321.01	264	D-361.01	364	D-361.01	464	D-341.02	564	D-341.02	664	D-341.02	764	D-341.02	864	D-161.01	964	D-151.01
065	D-321.01	165	D-321.01	265	D-361.01	365	D-361.01	465	D-341.02	565	D-341.02	665	D-341.02	765	D-341.02	865	D-161.01	965	
066	D-321.01	166	D-321.01	266	D-361.01	366	D-361.01	466	D-341.02	566	D-341.02	666	D-341.02	766	D-341.02	866	D-161.01	966	
067	D-321.01	167	D-321.01	267	D-361.01	367	D-361.01	467	D-341.02	567	D-341.02	667	D-341.02	767	D-341.02	867	D-161.01	967	
068	D-321.01	168	D-321.01	268	D-361.01	368	D-361.01	468	D-341.02	568	D-341.02	668	D-341.02	768	D-341.02	868	D-161.01	968	
069	D-321.01	169	D-321.01	269	D-361.01	369	D-361.01	469	D-341.02	569	D-341.02	669	D-341.02	769	D-341.02	879	D-161.01	969	
070	D-321.01	170	D-321.01	270	D-361.01	370	D-361.01	470	D-341.02	570	D-341.02	670	D-341.02	770	D-341.02	870	D-161.01	970	D-141.01
071	D-321.01	171	D-321.01	271	D-361.01	371	D-361.01	471	D-341.02	571	D-341.02	671	D-341.02	771	D-341.02	871	D-161.01	971	
072	D-321.01	172	D-321.01	272	D-361.01	372	D-361.01	472	D-341.02	572	D-341.02	672	D-341.02	772	D-341.02	872	D-161.01	972	
073	D-321.01	173	D-321.01	273	D-361.01	373	D-361.01	473	D-341.02	573	D-341.02	673	D-341.02	773	D-341.02	873	D-161.01	973	
074	D-321.01	174	D-321.01	274	D-361.01	374	D-361.01	474	D-341.02	574	D-341.02	674	D-341.02	774	D-341.02	874	D-161.01	974	
075	D-321.01	175	D-321.01	275	D-361.01	375	D-361.01	475	D-341.02	575	D-341.02	675	D-341.02	775	D-121.01	875	D-161.01	975	
076	D-321.01	176	D-321.01	276	D-361.01	376	D-361.01	476	D-341.02	576	D-341.02	676	D-341.02	776		876	D-161.01	976	
077	D-321.01	177	D-321.01	277	D-361.01	377	D-361.01	477	D-341.02	577	D-341.02	677	D-341.02	777		877	D-161.01	977	D-141.01
078	D-321.01	178	D-321.01	278	D-361.01	378	D-361.01	478	D-341.02	578	D-341.02	678	D-341.02	778		878	D-161.01	978	D-141.01
079	D-321.01	179	D-321.01	279	D-361.01	379	D-361.01	479	D-341.02	579	D-341.02	679	D-341.02	779		879	D-161.01	979	D-141.01
080	D-321.01	180	D-321.01	280	D-361.01	380	D-361.01	480	D-341.02	580	D-341.02	680	D-341.02	780		880	D-161.01	980	D-141.01
081	D-321.01	181	D-321.01	281	D-361.01	381	D-361.01	481	D-341.02	581	D-341.02	681	D-341.02	781		881	D-161.01	981	D-141.01
082	D-321.01	182	D-321.01	282	D-361.01	382	D-361.01	482	D-341.02	582	D-341.02	682	D-341.02	782	D-121.01	882	D-161.01	982	
083	D-321.01	183	D-321.01	283	D-361.01	383	D-361.01	483	D-341.02	583	D-341.02	683	D-341.02	783	D-121.01	883	D-161.01	983	
084	D-321.01	184	D-321.01	284	D-361.01	384	D-361.01	484	D-341.02	584	D-341.02	684	D-341.02	784	D-121.01	884	D-161.01	984	D-141.01
085	D-321.01	185	D-321.01	285	D-361.01	385	D-361.01	485	D-341.02	585		685	D-341.02	785	D-121.01	885	D-161.01	985	D-141.01
086	D-321.01	186	D-321.01	286	D 361.01	386	D-361.01	486	D-341.02	586		686	D-341.02	786	D-121.01	886	D-161.01	986	D-141.01
087	D-321.01	187	D-321.01	287	D-361.01	387	D-361.01	487	D-341.02	587		687	D-341.02	787		887	D-161.01	987	D-141.01
088	D-321.01	188	D-321.01	288	D-361.01	388	D-361.01	488	D-341.02	588		688	D-341.02	788		888	D-161.01	988	D-141.01
089	D-321.01	189	D-321.01	289	D 361.01	389	D-361.01	489	D-341.02	589		689	D-341.02	789	D-121.01	889	D-161.01	989	D-141.01
090	D-321.01	190	D-321.01	290	D-361.01	390	D-361.01	490	D-341.02	590		690	D-341.02	790	D-121.01	890	D-161.01	990	D-141.01
091	D-321.01	191	D-321.01	291	D-361.01	391	D-361.01	491	D-341.02	591		691	D-341.02	791	D-121.01	891	D-161.01	991	D-141.01
092	D-321.01	192	D-321.01	292	D-361.01	392	D-361.01	492	D-341.02	592		692	D-341.02	792	D-121.01	892	D-161.01	992	D-141.01
093	D-321.01	193	D-321.01	293	D-361.01	393	D-361.01	493	D-341.02	593		693	D-341.02	793	D-121.01	893	D-161.01	993	D-141.01
094	D-321.01	194	D-321.01	294	D-361.01	394	D-361.01	494	D-341.02	594		694	D-341.02	794	D-121.01	894	D-161.01	994	D-141.01
095	D-321.01	195	D-321.01	295	D-361.01	395	D-361.01	495	D-341.02	595		695	D-341.02	795	D-121.01	895	D-161.01	995	D-141.01
096	D-321.01	196	D-321.01	296	D-361.01	396	D-361.01	496	D-341.02	596		696	D-341.02	796	D-121.01	896	D-161.01	996	D-141.01
097	D-321.01	197	D-321.01	297	D-361.01	397	D-361.01	497	D-341.02	597		697	D-341.02	797	D-121.01	897	D-161.01	997	D-141.01
098	D-321.01	198	D-321.01	298	D-361.01	398	D-361.01	498	D-341.02	598		698	D-341.02	798	D-121.01	898	D-161.01	998	D-141.01
099	D-321.01	199	D-321.01	299	D-361.01	399	D-361.01	499	D-341.02	599		699	D-341.02	799	D-121.01	899	D-161.01	999	D-141.01

FORD MOTOR COMPANY
STANDARD PARTS

INDEX

THE TWO NUMBERS AT THE TOP OF THE NO. COLUMN ARE THE FIRST DIGITS OF THE FIVE DIGIT NUMBER AND FOLLOWING NUMBERS IN THE COLUMN ARE THE LAST THREE DIGITS OF THE FIVE DIGIT NUMBER.

No.	Page	No.	Page	No.	Page	No.	Page	No.	Page	No.	Page	No.	Page	No.	Page	No.	Page	No.	Page
33		33		33		33		33		33		33		33		33		33	
000	D-141.01	100	D-161.02	200	D-151.02	300		400	D-161.02	500	D-141.02	600	B-551.01	700	B-551.01	800	E-110.01	900	E-710.01
001	D-141.01	101	D-161.02	201	D-151.02	301		401	D-161.02	501	D-141.02	601	B-551.01	701	B-551.01	801		901	E-710.01
002	D-141.01	102	D-161.02	202	D-151.02	302	D-121.02	402	D-161.02	502		602	B-551.01	702	B-551.01	802		902	E-710.01
003	D-141.01	103	D-161.02	203	D-151.02	303	D-121.02	403	D-161.02	503		603	B-551.01	703	B-551.01	803		903	E-710.01
004	D-141.01	104	D-161.02	204	D-151.02	304	D-121.02	404	D-161.02	504	D-141.02	604	B-551.01	704	B-551.01	804		904	E-710.01
005	D-141.01	105	D-161.02	205	D-151.02	305	D-121.02	405	D-161.02	505	D-141.02	605	B-551.01	705	B-551.01	805		905	E-710.01
006	D-141.01	106	D-161.02	206	D-151.02	306	D-121.02	406	D-161.02	506	D-141.02	606	B-551.01	706	B-551.01	806		906	
007	D-141.01	107	D-161.02	207	D-151.02	307		407	D-161.02	507	D-141.02	607	B-551.01	707	B-551.01	807		907	
008	D-141.01	108	D-161.02	208	D-151.02	308		408	D-161.02	508	D-141.02	608	B-551.01	708	B-551.01	808		908	
009	D-141.01	109	D-161.02	209	D-151.02	309	D-121.02	409	D-161.02	509	D-141.02	609	B-551.01	709	B-551.01	809		909	
010	D-141.01	110	D-161.02	210	D-151.02	310	D-121.02	410	D-161.02	510	D-141.02	610	B-551.01	710	B-551.01	810		910	
011	D-141.01	111	D-161.02	211	D-151.02	311	D-121.02	411	D-161.02	511	D-141.02	611	B-551.01	711	B-551.01	811		911	
012	D-141.01	112	D-161.02	212	D-151.02	312	D-121.02	412	D-161.02	512	D-141.02	612	B-551.01	712	B-551.01	812		912	
013	D-141.01	113	D-161.02	213	D-151.02	313	D-121.02	413	D-161.02	513	D-141.02	613	B-551.01	713	B-551.01	813		913	
014	D-141.01	114	D-161.02	214	D-151.02	314	D-121.02	414	D-161.02	514	D-141.02	614	B-551.01	714	B-551.01	814		914	E-710.01
015	D-141.01	115	D-161.02	215	D-151.02	315	D-121.02	415	D-161.02	515	D-141.02	615	B-551.01	715	B-551.01	815		915	
016	D-141.01	116	D-161.02	216	D-151.02	316	D-121.02	416	D-161.02	516	D-141.02	616	B-551.01	716	B-551.01	816		916	
017	D-141.01	117	D-161.02	217	D-151.02	317	D-121.02	417	D-161.02	517	D-141.02	617	B-551.01	717	B-551.01	817		917	
018	D-141.01	118	D-161.02	218	D-151.02	318	D-121.02	418	D-161.02	518	D-141.02	618	B-551.01	718	B-551.01	818		918	
019	D-141.01	119	D-161.02	219	D-151.02	319	D-121.02	419	D-161.02	519	D-141.02	619	B-551.01	719	B-551.01	819		919	
020	D-141.01	120	D-161.02	220	D-151.02	320	D-121.02	420		520	D-141.02	620	B-551.01	720	B-551.01	820		920	E-120.01
021	D-141.01	121	D-161.02	221	D-151.02	321	D-121.02	421		521	D-141.02	621	B-551.01	721	B-551.01	821		921	E-120.01
022	D-141.01	122	D-161.02	222	D-151.02	322	D-121.02	422		522	D-141.02	622	B-551.01	722	B-551.01	822		922	E-120.01
023	D-141.01	123	D-161.02	223	D-151.02	323	D-121.02	423		523	D-141.02	623	B-551.01	723	B-551.01	823	E-110.01	923	E-120.01
024	D-141.01	124	D-161.02	224	D-151.02	324	D-121.02	424		524	D-141.02	624	B-551.01	724	B-551.01	824	E-110.01	924	E-120.01
025	D-141.01	125	D-161.02	225		325	D-121.02	425	D-151.02	525	D-141.02	625	B-551.01	725	B-551.01	825	E-110.01	925	E-120.01
026	D-141.01	126	D-161.02	226		326	D-121.02	426	D-151.02	526	D-141.02	626	B-551.01	726	B-551.01	826	E-110.01	926	
027	D-141.01	127	D-161.02	227		327	D-121.02	427	D-151.02	527	D-141.02	627	B-551.01	727	B-551.01	827	E-110.01	927	
028	D-141.01	128	D-161.02	228		328	D-121.02	428	D-151.02	528	D-141.02	628	B-551.01	728	B-551.01	828	E-110.01	928	
029	D-141.01	129	D-161.02	229		329	D-121.02	429	D-151.02	529	D-141.02	629	B-551.01	729	B-551.01	829		929	
030	D-141.01	130	D-161.02	230	D-141.02	330	D-121.02	430		530	D-141.02	630	B-551.01	730	B-551.01	830		930	
031	D-141.01	131	D-161.02	231	D-141.02	331	D-121.02	431		531	D-141.02	631	B-551.01	731	B-551.01	831		931	
032	D-141.01	132	D-161.02	232	D-141.02	332	D-121.02	432	D-151.02	532	D-141.02	632	B-551.01	732	B-551.01	832		932	
033	D-141.01	133	D-161.02	233	D-141.02	333	D-121.02	433	D-151.02	533	D-141.02	633	B-551.01	733	B-551.01	833		933	
034	D-141.01	134	D-161.02	234		334	D-121.02	434	D-151.02	534	D-141.02	634	B-551.01	734	B-551.01	834		934	
035	D-121.02	135	D-161.02	235		335	D-121.02	435	D-151.02	535	D-141.02	635	B-551.01	735	B-551.01	835		935	
036	D-121.02	136	D-161.02	236		336	D-121.02	436	D-151.02	536	D-141.02	636	B-551.01	736	B-551.01	836		936	
037	D-121.02	137	D-161.02	237	D-141.02	337	D-121.02	437	D-151.02	537	D-141.02	637	B-551.01	737	B-551.01	837		937	
038	D-121.02	138	D-161.02	238	D-141.02	338	D-121.02	438	D-151.02	538	D-141.02	638	B-551.01	738	B-551.01	838		938	
039		139	D-161.02	239	D-141.02	339	D-121.02	439	D-151.02	539	D-141.02	639	B-551.01	739	B-551.01	839		939	
040		140	D-161.02	240	D-141.02	340	D-121.02	440	D-151.02	540	D-141.02	640	B-551.01	740	B-551.01	840		940	
041		141	D-161.02	241	D-141.02	341	D-121.02	441	D-151.02	541	D-141.02	641	B-551.01	741	B-551.01	841		941	
042	D-121.02	142	D-161.02	242	D-141.02	342	D-121.02	442	D-151.02	542	D-141.02	642	B-551.01	742	B-551.01	842		942	E-120.01
043	D-121.02	143	D-161.02	243	D-141.02	343	D-121.02	443	D-151.02	543	D-141.02	643	B-551.01	743	B-551.01	843		943	E-120.01
044	D-121.02	144	D-161.02	244	D-141.02	344	D-121.02	444	D-151.02	544	D-141.02	644	B-551.01	744	B-551.01	844		944	E-120.01
045	D-121.02	145	D-161.02	245	D-141.02	345	D-121.02	445	D-151.02	545	D-141.02	645	B-551.01	745	B-551.01	845	E-110.01	945	E-120.01
046	D-121.02	146	D-161.02	246	D-141.02	346	D-121.02	446	D-151.02	546	D-141.02	646	B-551.01	746	B-551.01	846	E-110.01	946	E-120.01
047	D-121.02	147	D-161.02	247	D-141.02	347	D-121.02	447	D-151.02	547	D-141.02	647	B-551.01	747	B-551.01	847	E-110.01	947	E-120.01
048	D-121.02	148	D-161.02	248	D-141.02	348	D-121.02	448	D-151.02	548	D-141.02	648	B-551.01	748	B-551.01	848	E-110.01	948	
049	D-121.02	149	D-161.02	249	D-141.02	349	D-121.02	449	D-151.02	549	D-141.02	649	B-551.01	749	B-551.01	849	E-110.01	949	
050	D-121.02	150	D-161.02	250	D-141.02	350	D-121.02	450	D-151.02	550	B-551.01	650	B-551.01	750	B-551.01	850	E-110.01	950	
051	D-121.02	151	D-161.02	251	D-141.02	351	D-121.02	451	D-151.02	551	B-551.01	651	B-551.01	751	B-551.01	851		951	
052	D-121.02	152	D-161.02	252	D-141.02	352	D-121.02	452	D-151.02	552	B-551.01	652	B-551.01	752	B-551.01	852		952	
053	D-121.02	153	D-161.02	253	D-141.02	353	D-121.02	453	D-151.02	553	B-551.01	653	B-551.01	753	B-551.01	853		953	
054	D-121.02	154	D-161.02	254	D-141.02	354	D-121.02	454	D-151.02	554	B-551.01	654	B-551.01	754	B-551.01	854		954	
055	D-121.02	155	D-161.02	255	D-141.02	355		455	D-151.02	555	B-551.01	655	B-551.01	755	B-551.01	855		955	
056	D-121.02	156	D-161.02	256	D-141.02	356		456	D-151.02	556	B-551.01	656	B-551.01	756	B-551.01	856		956	
057	D-121.02	157	D-161.02	257	D-141.02	357		457	D-151.02	557	B-551.01	657	B-551.01	757	B-551.01	857		957	
058	D-121.02	158	D-161.02	258	D-141.02	358		458	D-151.02	558	B-551.01	658	B-551.01	758	B-551.01	858		958	
059	D-121.02	159	D-161.02	259	D-141.02	359		459	D-151.02	559	B-551.01	659	B-551.01	759	B-551.01	859		959	
060	D-121.02	160		260	D-141.02	360	D-161.02	460	D-151.02	560	B-551.01	660	B-551.01	760	B-551.01	860		960	
061	D-121.02	161		261	D-141.02	361	D-161.02	461	D-151.02	561	B-551.01	661	B-551.01	761	B-551.01	861		961	
062	D-121.02	162		262	D-141.02	362	D-161.02	462	D-151.02	562	B-551.01	662	B-551.01	762	B-551.01	862		962	
063	D-121.02	163		263	D-141.02	363	D-161.02	463	D-151.02	563	B-551.01	663	B-551.01	763	B-551.01	863		963	
064	D-121.02	164		264	D-141.02	364	D-161.02	464	D-151.02	564	B-551.01	664	B-551.01	764	B-551.01	864		964	
065	D-121.02	165	D-151.02	265	D-141.02	365		465	D-151.02	565	B-551.01	665	B-551.01	765	B-551.01	865		965	
066	D 121.02	166	D-151.02	266	D-141.02	366		466	D-151.02	566	B-551.01	666	B-551.01	766	B-551.01	866		966	
067	D-121.02	167	D-151.02	267	D-141.02	367	D-161.02	467	D-151.02	567	B-551.01	667	B-551.01	767	B-551.01	867		967	
068	D-121.02	168	D-151.02	268	D-141.02	368	D 161.02	468	D-151.02	568	B-551.01	668	B-551.01	768	B-551.01	868		968	
069	D-121.02	169	D-151.02	269	D-141.02	369	D-161.02	469	D-151.02	569	B-551.01	669	B-551.01	769		869		969	
070	D-121.02	170	D-151.02	270	D-141.02	370	D-161.02	470	D-151.02	570	B-551.01	670	B-551.01	770		870		970	
071		171	D-151.02	271	D-141.02	371	D-161.02	471	D-151.02	571	B-551.01	671	B-551.01	771		871		971	
072	D-121.02	172	D-151.02	272	D-141.02	372	D-161.02	472	D-151.02	572	B-551.01	672	B-551.01	772		872		972	
073	D-121.02	173	D-151.02	273	D-141.02	373	D-161.02	473	D-151.02	573	B-551.01	673	B-551.01	773		873		973	
074	D-121.02	174	D-151.02	274	D-141.02	374	D-161.02	474	D-151.02	574	B-551.01	674	B-551.01	774		874		974	E-130.01
075	D-121.02	175	D-151.02	275	D-141.02	375	D-161.02	475	D-151.02	575	B-551.01	675	B-551.01	775		875		975	E-130.01
076	D-121.02	176	D-151.02	276	D-141.02	376	D-161.02	476	D-151.02	576	B-551.01	676	B-551.01	776		876		976	E-130.01
077	D-121.02	177	D 151.02	277	D-141.02	377	D-161.02	477	D-151.02	577	B-551.01	677	B-551.01	777		877		977	E-130.01
078	D-121.02	178	D-151.02	278	D-141.02	378	D-161.02	478	D-151.02	578	B-551.01	678	B-551.01	778		878	E-115.02	978	E-130.01
079	D-121.02	179	D-151.02	279	D-141.02	379	D-161.02	479	D-151.02	579	B-551.01	679	B-551.01	779		879	E-115.02	979	E-130.01
080	D-121.02	180	D-151.02	280	D-141.02	380	D-161.02	480	D-151.02	580	B-551.01	680	B-551.01	780		880	E-115.02	980	
081	D-121.02	181	D-151.02	281	D-141.02	381	D-161.02	481	D-151.02	581	B-551.01	681	B-551.01	781		881		981	
082	D-121.02	182	D-151.02	282	D-141.02	382	D-161.02	482	D-151.02	582	B-551.01	682	B-551.01	782		882	E-115.02	982	E-130.01
083	D-121.02	183	D-151.02	283	D-141.02	383	D-161.02	483	D 151.02	583	B-551.01	683	B-551.01	783		883	E-115.02	983	E-130.01
084	D-121.02	184	D-151.02	284	D-141.02	384	D-161.02	484	D-151.02	584	B-551.01	684	B-551.01	784		884	E-115.02	984	E-130.01
085	D-121.02	185	D-151.02	285	D-141.02	385	D-161.02	485		585	B-551.01	685	B-551.01	785		885		985	E-130.01
086	D-121.02	186	D-151.02	286	D-141.02	386	D-161.02	486		586	B-551.01	686	B-551.01	786		886		986	E-130.01
087	D-121.02	187	D-151.02	287	D-141.02	387	D-161.02	487		587	B-551.01	687	B-551.01	787		887		987	E-130.01
088	D-121.02	188	D-151.02	288	D-141.02	388	D-161.02	488		588	B-551.01	688	B-551.01	788		888		988	
089	D-121.02	189	D-151.02	289	D-141.02	389	D-161.02	489		589	B-551.01	689	B-551.01	789		889		989	
090	D-121.02	190	D-151.02	290		390	D-161.02	490	D-141.02	590	B-551.01	690	B-551.01	790		890		990	
091	D-121.02	191	D-151.02	291		391	D-161.02	491		591	B-551.01	691	B-551.01	791		891	E-710.01	991	
092	D-121.02	192	D-151.02	292		392	D-161.02	492		592	B-551.01	692	B-551.01	792		892	E-710.01	992	
093	D-121.02	193	D-151.02	293		393	D 161.02	493		593	B-551.01	693	B-551.01	793		893	E-710.01	993	
094	D-121.02	194	D-151.02	294		394	D-161.02	494		594	B-551.01	694	B-551.01	794		894	E-710.01	994	
095		195	D-151.02	295	D-121.02	395	D-161.02	495		595	B-551.01	695	B-551.01	795	E-110.01	895	E-710.01	995	
096		196	D-151.02	296		396	D-161.02	496		596	B-551.01	696	B-551.01	796	E-110.01	896	E-710.01	996	
097		197	D-151.02	297		397	D-161.02	497	D-141.02	597	B-551.01	697	B-551.01	797	E-110.01	897	E-710.01	997	
098		198	D-151.02	298		398	D-161.02	498	D-141.02	598	B-551.01	698	B-551.01	798	E-110.01	898	E-710.01	998	
099		199	D-151.02	299		399	D-161.02	499	D-141.02	599	B-551.01	699	B-551.01	799	E-110.01	899	E-710.01	999	

FORD MOTOR COMPANY

STANDARD PARTS

INDEX

THE TWO NUMBERS AT THE TOP OF THE NO. COLUMN ARE THE FIRST DIGITS OF THE FIVE DIGIT NUMBER AND FOLLOWING NUMBERS IN THE COLUMN ARE THE LAST THREE DIGITS OF THE FIVE DIGIT NUMBER.

No.	Page	No.	Page	No.	Page	No.	Page	No.	Page	No.	Page	No.	Page	No.	Page	No.	Page	No.	Page
34		34		34		34		34		34		34		34		34		34	
000		100		200		300		400	E-136.01	500		600	E-410.09	700		800	F-201.01	900	F-220.02
001		101	E-210.01	201		301	E-310.01	401	E-136.01	501	E-410.03	601	E-410.09	701		801	F-201.01	901	F-220.02
002		102	E-210.01	202		302		402	E-136.01	502		602		702		802	F-201.01	902	F-220.02
003		103		203		303		403	E-136.01	503	E-410.03	603	E-410.09	703		803	F-201.01	903	F-220.02
004		104		204		304	E-310.01	404	E-136.01	504	E-410.03	604	E-410.09	704		804	F-201.01	904	F-220.02
005		105		205		305		405	E-136.01	505	E-410.03	605	E-410.09	705		805	F-201.01	905	F-220.02
006		106		206		306		406	E-136.01	506	E-410.03	606	E-410.09	706		806	F-201.01	906	F-220.02
007		107		207		307	E-310.01	407	E-136.01	507	E-410.03	607	E-410.09	707		807	F-201.01	907	F-220.02
008		108	E-210.01	208	E-140.02	308		408	E-136.01	508	E-410.03	608	E-410.09	708		808	F-201.01	908	F-220.02
009		109	E-210.01	209	E-140.02	309		409	E-136.01	509	E-410.03	609	E-410.09	709		809	F-201.01	909	F-220.02
010		110	E-210.01	210	E-140.02	310	E-310.01	410		510		610	E-410.09	710		810	F-201.02	910	F-220.02
011		111	E-210.01	211	E-140.02	311		411		511	E-410.03	611		711		811	F-201.02	911	F-220.02
012		112	E-210.01	212	E-140.02	312		412		512	E-410.03	612		712		812	F-201.02	912	F-220.02
013		113		213	E-140.02	313	E-310.01	413		513		613		713		813	F-201.02	913	F-220.02
014		114	E-210.01	214	E-140.02	314		414		514	E-410.04	614		714		814	F-201.02	914	F-220.02
015		115	E-210.01	215	E-140.02	315		415		515		615	E-410.09	715		815	F-201.02	915	F-220.02
016		116		216		316	E-310.01	416		516	E-410.04	616	E-410.09	716		816	F-201.02	916	F-220.02
017		117		217		317		417		517	E-410.04	617	E-410.09	717		817	F-201.02	917	F-220.02
018		118		218		318		418		518	E-410.04	618	E-410.09	718		818	F-201.02	918	F-220.02
019		119		219		319	E-310.01	419	E-135.05	519	E-410.04	619	E-410.09	719		819	F-201.02	919	F-220.02
020		120		220		320		420	E-135.05	520		620	E-410.09	720		820	F-201.01	920	F-220.02
021		121		221		321		421	E-135.05	521		621	E-410.09	721		821	F-201.01	921	F-220.02
022		122		222		322	E-310.01	422	E-135.05	522	E-410.05	622	E-410.09	722		822	F-201.01	922	F-220.02
023		123		223		323		423	E-135.05	523	E-410.05	623		723		823	F-201.01	923	F-220.02
024		124		224	E-140.02	324		424	E-135.05	524	E-410.05	624	E-410.09	724		824	F-201.01	924	F-220.02
025		125	E-211.02	225	E-140.02	325	E-310.01	425	E-135.05	525	E-410.05	625	E-410.09	725		825	F-201.01	925	F-220.02
026		126	E-211.02	226	E-140.02	326		426	E-135.05	526	E-410.05	626	E-410.10	726		826	F-201.01	926	F-220.02
027		127	E-211.02	227	E-140.02	327		427	E-135.05	527	E-410.05	627	E-410.10	727		827	F-201.01	927	F-210.01
028	E-130.05	128	E-211.02	228	E-140.02	328	E-310.01	428	E-135.05	528	E-410.05	628		728		828	F-201.01	928	F-210.01
029	E-130.05	129	E-211.02	229	E-140.02	329		429	E-135.05	529	E-410.05	629	E-410.10	729		829	F-201.01	929	F-210.01
030	E-130.05	130	E-211.02	230	E-140.02	330		430	E-135.05	530	E-410.05	630	E-410.10	730		830	F-201.02	930	F-210.01
031		131	E-211.02	231	E-140.02	331	E-310.01	431	E-135.05	531		631	E-410.10	731		831	F-201.02	931	
032	E-130.05	132	E-211.02	232	E-310.01	332		432	E-135.05	532		632		732		832	F-201.02	932	
033	E-130.05	133	E-211.02	233		333		433	E-135.05	533	E-410.05	633	E-410.10	733		833	F-201.02	933	
034	E-130.05	134	E-211.02	234		334	E-310.02	434	E-135.05	534	E-410.05	634	E-410.10	734		834	F-201.02	934	
035		135	E-211.02	235	E-310.01	335	E-310.02	435		535	E-410.05	635	E-410.04	735		835	F-201.02	935	
036		136	E-211.02	236		336	E-310.02	436		536	E-410.05	636	E-410.04	736		836	F-201.02	936	F-210.01
037		137	E-211.02	237		337	E-310.02	437		537	E-410.05	637	E-410.04	737		837	F-201.02	937	F-210.01
038		138	E-211.02	238	E-310.01	338		438		538	E-410.05	638	E-410.04	738		838	F-201.02	938	F-210.01
039		139	E-211.02	239		339	E-310.02	439		539	E-410.05	639		739		839	F-201.02	939	F-210.01
040		140	E-211.02	240		340	E-310.02	440	E-136.02	540	E-410.05	640		740		840	F-201.01	940	F-210.01
041		141	E-211.02	241	E-310.01	341		441	E-136.02	541	E-410.05	641		741		841	F-201.01	941	F-210.01
042		142	E-211.02	242		342	E-310.02	442	E-136.02	542		642		742		842	F-201.01	942	F-210.01
043		143	E-211.02	243		343	E-310.02	443	E-136.02	543	E-410.06	643		743		843	F-201.01	943	F-210.01
044		144	E-211.02	244	E-310.01	344	E-310.02	444	E-136.02	544	E-410.06	644		744		844	F-201.01	944	F-210.01
045		145	E-211.02	245		345	E-310.02	445	E-136.02	545	E-410.06	645		745		845	F-201.01	945	F-210.01
046		146		246		346		446	E-136.02	546	E-410.06	646	E-410.10	746		846	F-201.01	946	F-210.01
047		147		247	E-310.01	347	E-310.02	447	E-136.02	547	E-410.06	647	E-410.10	747		847	F-201.01	947	F-210.01
048		148		248		348		448	E-136.02	548	E-410.06	648		748		848	F-201.01	948	F-210.01
049		149		249		349		449	E-136.02	549	E-410.06	649		749		849	F-201.01	949	F-210.01
050	E-125.02	150		250		350		450	E-136.02	550	E-410.06	650		750		850	F-201.02	950	F-210.01
051	E-125.02	151		251		351		451	E-136.02	551	E-410.06	651	E-145.01	751		851	F-201.02	951	F-210.01
052	E-125.02	152		252		352		452	E-136.02	552	E-410.06	652	E-145.01	752		852	F-201.02	952	F-210.01
053	E-125.02	153		253		353		453	E-136.02	553	E-410.06	653	E-145.01	753		853	F-201.02	953	F-210.01
054	E-125.02	154		254		354	E-310.02	454	E-136.02	554	E-410.06	654	E-145.01	754		854	F-201.02	954	F-210.01
055	E-125.02	155		255		355	E-310.02	455	E-136.02	555	E-410.06	655	E-145.01	755		855	F-201.02	955	F-210.01
056	E-125.02	156		256		356	E-310.02	456	E-136.02	556	E-410.06	656	E-145.01	756		856	F-201.02	956	F-210.01
057	E-125.02	157		257		357	E-310.02	457	E-136.02	557	E-410.06	657	E-145.01	757		857	F-201.02	957	F-210.01
058		158	E-140.01	258		358	E-310.02	458	E-136.02	558	E-410.06	658	E-145.01	758		858	F-201.02	958	F-210.01
059		159	E-140.01	259		359	E-310.02	459	E-136.02	559	E-410.07	659	E-145.01	759		859	F-201.02	959	
060		160	E-140.01	260		360	E-310.02	460	E-410.01	560	E-410.07	660	E-145.01	760		860	F-300.01	960	
061		161	E-140.01	261		361	E-310.02	461	E-410.01	561	E-410.07	661	E-145.01	761		861	F-300.01	961	F-300.01
062		162	E-140.01	262		362	E-310.02	462		562	E-410.07	662	E-145.01	762		862	F-300.01	962	F-300.01
063	E-125.02	163	E-140.01	263		363	E-310.02	463		563	E-410.07	663	E-145.01	763		863	F-300.01	963	F-300.01
064	E-125.02	164	E-140.01	264		364		464	E-410.01	564	E-410.07	664	E-145.01	764		864	F-300.01	964	F-300.01
065	E-125.02	165	E-140.01	265		365	E-135.02	465	E-410.01	565	E-410.07	665		765		865	F-300.01	965	F-300.01
066	E-125.02	166		266		366	E-135.02	466	E-410.01	566	E-410.07	666		766		866	F-300.01	966	F-300.01
067	E-125.02	167		267		367	E-135.02	467	E-410.01	567		667		767		867	F-300.01	967	F-300.01
068	E-125.02	168		268		368	E-135.02	468	E-410.01	568	E-410.07	668		768		868	F-300.01	968	F-300.01
069	E-125.02	169		269		369	E-135.02	469	E-410.01	569	E-410.07	669		769		879	F-300.01	969	F-300.01
070	E-125.02	170		270		370	E-135.02	470	E-410.01	570	E-410.07	670	E-110.01	770		870	F-300.01	970	F-300.01
071		171		271		371	E-135.02	471	E-410.01	571		671	E-110.01	771		871	F-300.01	971	F-300.01
072		172		272		372	E-135.02	472	E-410.01	572		672	E-110.01	772		872		972	F-300.01
073		173		273		373	E-135.02	473	E-410.01	573		673	E-110.01	773		873		973	F-300.01
074		174	E-140.01	274	E-310.01	374	E-135.02	474	E-410.01	574	E-410.08	674	E-110.01	774		874		974	F-300.01
075		175	E-140.01	275		375	E-135.02	475	E-410.01	575	E-410.08	675	E-110.01	775		875	F-300.01	975	
076	E-125.02	176	E-140.01	276		376	E-135.02	476	E-410.01	576	E-410.08	676	E-110.01	776		876	F-300.01	976	
077	E-125.02	177	E-140.01	277	E-310.01	377	E-135.02	477	E-410.01	577		677	E-110.01	777		877	F-300.01	977	
078	E-125.02	178	E-140.01	278		378	E-135.02	478	E-410.01	578	E-410.08	678	E-110.01	778		878	F-300.01	978	
079	E-125.02	179	E-140.01	279		379	E-135.02	479	E-410.01	579		679	E-110.01	779		879	F-300.01	979	
080	E-125.02	180	E-140.01	280	E-310.01	380	E-135.02	480	E-410.01	580	E-410.08	680	E-110.01	780	F-200.02	880	F-300.01	980	
081	E-125.02	181	E-140.01	281		381	E-135.02	481	E-410.01	581	E-410.08	681	E-110.01	781	F-200.02	881	F-300.01	981	
082	E-125.02	182		282		382	E-135.02	482	E-410.01	582	E-410.08	682	E-115.02	782	F-200.02	882	F-300.01	982	
083	E-125.02	183		283	E-310.01	383	E-135.02	483		583	E-410.08	683	E-115.02	783	F-200.02	883	F-300.01	983	
084		184		284		384	E-135.02	484		584	E-410.08	684	E-115.02	784	F-200.02	884	F-300.01	984	
085		185		285		385		485	E-410.02	585	E-410.08	685	E-115.02	785	F-200.02	885	F-300.01	985	
086		186		286	E-310.01	386		486	E-410.02	586	E-410.08	686	E-115.02	786	F-200.02	886	F-300.01	986	
087		187		287		387		487		587	E-410.08	687	E-115.02	787	F-200.02	887	F-300.01	987	
088		188		288		388		488	E-410.02	588	E-410.08	688	E-115.02	788	F-200.02	888	F-300.01	988	
089		189		289	E-310.01	389		489	E-410.02	589	E-410.08	689	E-120.01	789	F-200.02	889	F-300.01	989	
090		190		290		390	E-136.01	490	E-410.02	590	E-410.08	690	E-120.01	790		890	F-300.01	990	
091		191		291		391	E-136.01	491		591	E-410.08	691	E-120.01	791		891		991	
092		192	E-140.01	292	E-310.01	392	E-136.01	492		592		692	E-120.01	792		892		992	
093		193	E-140.01	293		393	E-136.01	493	E-410.02	593	E-410.08	693	E-120.01	793		893		993	
094		194	E-140.01	294		394	E-136.01	494	E-410.02	594	E-410.08	694	E-120.01	794		894		994	
095	E-210.01	195	E-140.01	295	E-310.01	395	E-136.01	495		595	E-410.08	695	E-120.01	795		895		995	
096	E-210.01	196	E-140.01	296		396	E-136.01	496		596	E-410.08	696	E-120.01	796		896		996	
097	E-210.01	197	E-140.01	297		397	E-136.01	497		597	E-410.08	697	E-120.01	797		897		997	
098	E-210.01	198	E-140.01	298	E-310.01	398	E-136.01	498		598		698	E-120.01	798		898		998	
099	E-210.01	199	E-140.01	299		399	E-136.01	499	E-410.03	599	E-410.09	699	E-130.01	799		899		999	

FORD MOTOR COMPANY
STANDARD PARTS

INDEX

THE TWO NUMBERS AT THE TOP OF THE NO. COLUMN ARE THE FIRST DIGITS OF THE FIVE DIGIT NUMBER AND FOLLOWING NUMBERS IN THE COLUMN ARE THE LAST THREE DIGITS OF THE FIVE DIGIT NUMBER.

No.	Page	No.	Page	No.	Page	No.	Page	No.	Page	No.	Page	No.	Page	No.	Page	No.	Page	No.	Page
35		35		35		35		35		35		35		35		35		35	
000	B-350.02	100	B-350.02	200	B-350.02	300	B-350.02	400	B-350.02	500		600	B-351.01	700	B-351.01	800	B-351.01	900	B-351.01
001	B-350.02	101	B-350.02	201	B-350.02	301	B-350.02	401	B-350.02	501		601	B-351.01	701	B-351.01	801	B-351.01	901	B-351.01
002	B-350.02	102	B-350.02	202	B-350.02	302	B-350.02	402	B-350.02	502		602	B-351.01	702	B-351.01	802	B-351.01	902	B-351.01
003	B-350.02	103	B-350.02	203	B-350.02	303	B-350.02	403	B-350.02	503		603	B-351.01	703	B-351.01	803	B-351.01	903	B-351.01
004	B-350.02	104	B-350.02	204	B-350.02	304	B-350.02	404	B-350.02	504		604	B-351.01	704	B-351.01	804	B-351.01	904	B-351.01
005	B-350.02	105	B-350.02	205	B-350.02	305	B-350.02	405	B-350.02	505		605	B-351.01	705	B-351.01	805	B-351.01	905	B-351.01
006	B-350.02	106	B-350.02	206	B-350.02	306	B-350.02	406	B-350.02	506		606	B-351.01	706	B-351.01	806	B-351.01	906	B-351.01
007	B-350.02	107	B-350.02	207	B-350.02	307	B-350.02	407	B-350.02	507		607	B-351.01	707	B-351.01	807	B-351.01	907	B-351.01
008	B-350.02	108	B-350.02	208	B-350.02	308	B-350.02	408	B-350.02	508		608	B-351.01	708	B-351.01	808	B-351.01	908	B-351.01
009	B-350.02	109	B-350.02	209	B-350.02	309	B-350.02	409	B-350.02	509		609	B-351.01	709	B-351.01	809	B-351.01	909	B-351.01
010	B-350.02	110	B-350.02	210	B-350.02	310	B-350.02	410	B-350.02	510	B-351.01	610	B-351.01	710	B-351.01	810	B-351.01	910	B-351.01
011	B-350.02	111	B-350.02	211	B-350.02	311	B-350.02	411	B-350.02	511	B-351.01	611	B-351.01	711	B-351.01	811	B-351.01	911	B-351.01
012	B-350.02	112	B-350.02	212	B-350.02	312	B-350.02	412	B-350.02	512	B-351.01	612	B-351.01	712	B-351.01	812	B-351.01	912	B-351.01
013	B-350.02	113	B-350.02	213	B-350.02	313	B-350.02	413	B-350.02	513	B-351.01	613	B-351.01	713	B-351.01	813	B-351.01	913	B-351.01
014	B-350.02	114	B-350.02	214	B-350.02	314	B-350.02	414	B-350.02	514	B-351.01	614	B-351.01	714	B-351.01	814	B-351.01	914	B-351.01
015		115	B-350.02	215	B-350.02	315	B-350.02	415	B-350.02	515	B-351.01	615	B-351.01	715	B-351.01	815	B-351.01	915	B-351.01
016		116	B-350.02	216	B-350.02	316	B-350.02	416	B-350.02	516	B-351.01	616	B-351.01	716	B-351.01	816	B-351.01	916	B-351.01
017		117	B-350.02	217	B-350.02	317	B-350.02	417	B-350.02	517	B-351.01	617	B-351.01	717	B-351.01	817	B-351.01	917	B-351.01
018		118	B-350.02	218	B-350.02	318	B-350.02	418	B-350.02	518	B-351.01	618	B-351.01	718	B-351.01	818	B-351.01	918	B-351.01
019		119	B-350.02	219	B-350.02	319	B-350.02	419	B-350.02	519	B-351.01	619	B-351.01	719	B-351.01	819	B-351.01	919	B-351.01
020		120	B-350.02	220	B-350.02	320	B-350.02	420	B-350.02	520	B-351.01	620	B-351.01	720	B-351.01	820	B-351.01	920	B-351.01
021		121	B-350.02	221	B-350.02	321	B-350.02	421	B-350.02	521	B-351.01	621	B-351.01	721	B-351.01	821	B-351.01	921	B-351.01
022		122	B-350.02	222	B-350.02	322	B-350.02	422	B-350.02	522	B-351.01	622	B-351.01	722	B-351.01	822	B-351.01	922	B-351.01
023		123	B-350.02	223	B-350.02	323	B-350.02	423	B-350.02	523	B-351.01	623	B-351.01	723	B-351.01	823	B-351.01	923	B-351.01
024		124	B-350.02	224	B-350.02	324	B-350.02	424	B-350.02	524	B-351.01	624	B-351.01	724	B-351.01	824	B-351.01	924	B-351.01
025		125	B-350.02	225	B-350.02	325	B-350.02	425	B-350.02	525	B-351.01	625	B-351.01	725	B-351.01	825	B-351.01	925	B-351.01
026		126	B-350.02	226	B-350.02	326	B-350.02	426	B-350.02	526	B-351.01	626	B-351.01	726	B-351.01	826	B-351.01	926	B-351.01
027		127	B-350.02	227	B-350.02	327	B-350.02	427	B-350.02	527	B-351.01	627	B-351.01	727	B-351.01	827	B-351.01	927	B-351.01
028		128	B-350.02	228	B-350.02	328	B-350.02	428	B-350.02	528	B-351.01	628	B-351.01	728	B-351.01	828	B-351.01	928	B-351.01
029		129	B-350.02	229	B-350.02	329	B-350.02	429	B-350.02	529	B-351.01	629	B-351.01	729	B-351.01	829	B-351.01	929	B-351.01
030	B-350.02	130	B-350.02	230	B-350.02	330	B-350.02	430	B-350.02	530	B-351.01	630	B-351.01	730	B-351.01	830	B-351.01	930	B-351.01
031	B-350.02	131	B-350.02	231	B-350.02	331	B-350.02	431	B-350.02	531	B-351.01	631	B-351.01	731	B-351.01	831	B-351.01	931	B-351.01
032	B-350.02	132	B-350.02	232	B-350.02	332	B-350.02	432	B-350.02	532	B-351.01	632	B-351.01	732	B-351.01	832	B-351.01	932	B-351.01
033	B-350.02	133	B-350.02	233	B-350.02	333	B-350.02	433	B-350.02	533	B-351.01	633	B-351.01	733	B-351.01	833	B-351.01	933	B-351.01
034	B-350.02	134	B-350.02	234	B-350.02	334	B-350.02	434	B-350.02	534	B-351.01	634	B-351.01	734	B-351.01	834	B-351.01	934	B-351.01
035	B-350.02	135	B-350.02	235	B-350.02	335	B-350.02	435	B-350.02	535	B-351.01	635	B-351.01	735	B-351.01	835	B-351.01	935	B-351.01
036	B-350.02	136	B-350.02	236	B-350.02	336	B-350.02	436	B-350.02	536	B-351.01	636	B-351.01	736	B-351.01	836	B-351.01	936	B-351.01
037	B-350.02	137	B-350.02	237	B-350.02	337	B-350.02	437	B-350.02	537	B-351.01	637	B-351.01	737	B-351.01	837	B-351.01	937	B-351.01
038	B-350.02	138	B-350.02	238	B-350.02	338	B-350.02	438	B-350.02	538	B-351.01	638	B-351.01	738	B-351.01	838	B-351.01	938	B-351.01
039	B-350.02	139	B-350.02	239	B-350.02	339	B-350.02	439	B-350.02	539	B-351.01	639	B-351.01	739	B-351.01	839	B-351.01	939	B-351.01
040	B-350.02	140	B-350.02	240	B-350.02	340	B-350.02	440	B-350.02	540	B-351.01	640	B-351.01	740	B-351.01	840	B-351.01	940	B-351.01
041	B-350.02	141	B-350.02	241	B-350.02	341	B-350.02	441	B-350.02	541	B-351.01	641	B-351.01	741	B-351.01	841	B-351.01	941	B-351.01
042	B-350.02	142	B-350.02	242	B-350.02	342	B-350.02	442	B-350.02	542	B-351.01	642	B-351.01	742	B-351.01	842	B-351.01	942	B-351.01
043	B-350.02	143	B-350.02	243	B-350.02	343	B-350.02	443	B-350.02	543	B-351.01	643	B-351.01	743	B-351.01	843	B-351.01	943	B-351.01
044	B-350.02	144	B-350.02	244	B-350.02	344	B-350.02	444	B-350.02	544	B-351.01	644	B-351.01	744	B-351.01	844	B-351.01	944	B-351.01
045	B-350.02	145	B-350.02	245	B-350.02	345	B-350.02	445	B-350.02	545	B-351.01	645	B-351.01	745	B-351.01	845	B-351.01	945	B-351.01
046	B-350.02	146	B-350.02	246	B-350.02	346	B-350.02	446	B-350.02	546	B-351.01	646	B-351.01	746	B-351.01	846	B-351.01	946	B-351.01
047	B-350.02	147	B-350.02	247	B-350.02	347	B-350.02	447	B-350.02	547	B-351.01	647	B-351.01	747	B-351.01	847	B-351.01	947	B-351.01
048	B-350.02	148	B-350.02	248	B-350.02	348	B-350.02	448	B-350.02	548	B-351.01	648	B-351.01	748	B-351.01	848	B-351.01	948	B-351.01
049	B-350.02	149	B-350.02	249	B-350.02	349	B-350.02	449	B-350.02	549	B-351.01	649	B-351.01	749	B-351.01	849	B-351.01	949	B-351.01
050	B-350.02	150	B-350.02	250	B-350.02	350	B-350.02	450	B-350.02	550	B-351.01	650	B-351.01	750	B-351.01	850	B-351.01	950	B-351.01
051	B-350.02	151	B-350.02	251	B-350.02	351	B-350.02	451	B-350.02	551	B-351.01	651	B-351.01	751	B-351.01	851	B-351.01	951	B-351.01
052	B-350.02	152	B-350.02	252	B-350.02	352	B-350.02	452	B-350.02	552	B-351.01	652	B-351.01	752	B-351.01	852	B-351.01	952	B-351.01
053	B-350.02	153	B-350.02	253	B-350.02	353	B-350.02	453	B-350.02	553	B-351.01	653	B-351.01	753	B-351.01	853	B-351.01	953	B-351.01
054	B-350.02	154	B-350.02	254	B-350.02	354	B-350.02	454	B-350.02	554	B-351.01	654	B-351.01	754	B-351.01	854	B-351.01	954	B-351.01
055	B-350.02	155	B-350.02	255	B-350.02	355	B-350.02	455	B-350.02	555	B-351.01	655	B-351.01	755	B-351.01	855	B-351.01	955	B-351.01
056	B-350.02	156	B-350.02	256	B-350.02	356	B-350.02	456	B-350.02	556	B-351.01	656	B-351.01	756	B-351.01	856	B-351.01	956	B-351.01
057	B-350.02	157	B-350.02	257	B-350.02	357	B-350.02	457	B-350.02	557	B-351.01	657	B-351.01	757	B-351.01	857	B-351.01	957	B-351.01
058	B-350.02	158	B-350.02	258	B-350.02	358	B-350.02	458	B-350.02	558	B-351.01	658	B-351.01	758	B-351.01	858	B-351.01	958	B-351.01
059	B-350.02	159	B-350.02	259	B-350.02	359	B-350.02	459	B-350.02	559	B-351.01	659	B-351.01	759	B-351.01	859	B-351.01	959	B-351.01
060	B-350.02	160	B-350.02	260	B-350.02	360	B-350.02	460	B-350.02	560	B-351.01	660	B-351.01	760	B-351.01	860	B-351.01	960	C-200.12
061	B-350.02	161	B-350.02	261	B-350.02	361	B-350.02	461	B-350.02	561	B-351.01	661	B-351.01	761	B-351.01	861	B-351.01	961	C-200.12
062	B-350.02	162	B-350.02	262	B-350.02	362	B-350.02	462	B-350.02	562	B-351.01	662	B-351.01	762	B-351.01	862	B-351.01	962	C-200.12
063	B-350.02	163	B-350.02	263	B-350.02	363	B-350.02	463	B-350.02	563	B-351.01	663	B-351.01	763	B-351.01	863	B-351.01	963	C-200.12
064	B-350.02	164	B-350.02	264	B-350.02	364	B-350.02	464	B-350.02	564	B-351.01	664	B-351.01	764	B-351.01	864	B-351.01	964	C-200.12
065	B-350.02	165	B-350.02	265	B-350.02	365	B-350.02	465	B-350.02	565	B-351.01	665	B-351.01	765	B-351.01	865	B-351.01	965	C-200.12
066	B-350.02	166	B-350.02	266	B-350.02	366	B-350.02	466	B-350.02	566	B-351.01	666	B-351.01	766	B-351.01	866	B-351.01	966	C-200.12
067	B-350.02	167	B-350.02	267	B-350.02	367	B-350.02	467	B-350.02	567	B-351.01	667	B-351.01	767	B-351.01	867	B-351.01	967	C-200.12
068	B-350.02	168	B-350.02	268	B-350.02	368	B-350.02	468	B-350.02	568	B-351.01	668	B-351.01	768	B-351.01	868	B-351.01	968	C-200.12
069	B-350.02	169	B-350.02	269	B-350.02	369	B-350.02	469	B-350.02	569	B-351.01	669	B-351.01	769	B-351.01	869	B-351.01	969	C-200.12
070	B-350.02	170	B-350.02	270	B-350.02	370	B-350.02	470	B-350.02	570	B-351.01	670	B-351.01	770	B-351.01	870	B-351.01	970	C-200.12
071	B-350.02	171	B-350.02	271	B-350.02	371	B-350.02	471	B-350.02	571	B-351.01	671	B-351.01	771	B-351.01	871	B-351.01	971	C-200.12
072	B-350.02	172	B-350.02	272	B-350.02	372	B-350.02	472	B-350.02	572	B-351.01	672	B-351.01	772	B-351.01	872	B-351.01.	972	C-200.12
073	B-350.02	173	B-350.02	273	B-350.02	373	B-350.02	473	B-350.02	573	B-351.01	673	B-351.01	773	B-351.01	873	B-351.01	973	C-200.12
074	B-350.02	174	B-350.02	274	B-350.02	374	B-350.02	474	B-350.02	574	B-351.01	674	B-351.01	774	B-351.01	874	B-351.01	974	C-200.12
075	B-350.02	175	B-350.02	275	B-350.02	375	B-350.02	475	B-350.02	575	B-351.01	675	B-351.01	775	B-351.01	875	B-351.01	975	C-200.12
076	B-350.02	176	B-350.02	276	B-350.02	376	B-350.02	476	B-350.02	576	B-351.01	676	B-351.01	776	B-351.01	876	B-351.01	976	C-200.12
077	B-350.02	177	B-350.02	277	B-350.02	377	B-350.02	477	B-350.02	577	B-351.01	677	B-351.01	777	B-351.01	877	B-351.01	977	C-200.12
078	B-350.02	178	B-350.02	278	B-350.02	378	B-350.02	478	B-350.02	578	B-351.01	678	B-351.01	778	B-351.01	878	B-351.01	978	C-200.12
079	B-350.02	179	B-350.02	279	B-350.02	379	B-350.02	479	B-350.02	579	B-351.01	679	B-351.01	779	B-351.01	879	B-351.01	979	C-200.12
080	B-350.02	180	B-350.02	280	B-350.02	380	B-350.02	480	B-351.01	580	B-351.01	680	B-351.01	780	B-351.01	880	B-351.01	980	C-200.12
081	B-350.02	181	B-350.02	281	B-350.02	381	B-350.02	481	B-351.01	581	B-351.01	681	B-351.01	781	B-351.01	881	B-351.01	981	C-200.12
082	B-350.02	182	B-350.02	282	B-350.02	382	B-350.02	482	B-351.01	582	B-351.01	682	B-351.01	782	B-351.01	882	B-351.01	982	C-200.12
083	B-350.02	183	B-350.02	283	B-350.02	383	B-350.02	483	B-351.01	583	B-351.01	683	B-351.01	783	B-351.01	883	B-351.01	983	C-200.12
084	B-350.02	184	B-350.02	284	B-350.02	384	B-350.02	484	B-351.01	584	B-351.01	684	B-351.01	784	B-351.01	884	B-351.01	984	C-200.12
085	B-350.02	185	B-350.02	285	B-350.02	385	B-350.02	485	B-351.01	585	B-351.01	685	B-351.01	785	B-351.01	885	B-351.01	985	C-200.12
086	B-350.02	186	B-350.02	286	B-350.02	386	B-350.02	486	B-351.01	586	B-351.01	686	B-351.01	786	B-351.01	886	B-351.01	986	C-200.12
087	B-350.02	187	B-350.02	287	B-350.02	387	B-350.02	487	B-351.01	587	B-351.01	687	B-351.01	787	B-351.01	887	B-351.01	987	C-200.12
088	B-350.02	188	B-350.02	288	B-350.02	388	B-350.02	488	B-351.01	588	B-351.01	688	B-351.01	788	B-351.01	888	B-351.01	988	C-200.12
089	B-350.02	189	B-350.02	289	B-350.02	389	B-350.02	489	B-351.01	589	B-351.01	689	B-351.01	789	B-351.01	889	B-351.01	989	C-200.12
090	B-350.02	190	B-350.02	290	B-350.02	390	B-350.02	490	B-351.01	590	B-351.01	690	B-351.01	790	B-351.01	890	B-351.01	990	C-200.12
091	B-350.02	191	B-350.02	291	B-350.02	391	B-350.02	491	B-351.01	591	B-351.01	691	B-351.01	791	B-351.01	891	B-351.01	991	C-200.12
092	B-350.02	192	B-350.02	292	B-350.02	392	B-350.02	492	B-351.01	592	B-351.01	692	B-351.01	792	B-351.01	892	B-351.01	992	C-200.12
093	B-350.02	193	B-350.02	293	B-350.02	393	B-350.02	493	B-351.01	593	B-351.01	693	B-351.01	793	B-351.01	893	B-351.01	993	C-200.12
094	B-350.02	194	B-350.02	294	B-350.02	394	B-350.02	494	B-351.01	594	B-351.01	694	B-351.01	794	B-351.01	894	B-351.01	994	C-200.12
095	B-350.02	195	B-350.02	295	B-350.02	395	B-350.02	495		595	B-351.01	695	B-351.01	795	B-351.01	895	B-351.01	995	C-200.12
096	B-350.02	196	B-350.02	296	B-350.02	396	B-350.02	496		596	B-351.01	696	B-351.01	796	B-351.01	896	B-351.01	996	C-200.12
097	B-350.02	197	B-350.02	297	B-350.02	397	B-350.02	497		597	B-351.01	697	B-351.01	797	B-351.01	897	B-351.01	997	C-200.12
098	B-350.02	198	B-350.02	298	B-350.02	398	B-350.02	498		598	B-351.01	698	B-351.01	798	B-351.01	898	B-351.01	998	C-200.12
099	B-350.02	199	B-350.02	299	B-350.02	399	B-350.02	499		599	B-351.01	699	B-351.01	799	B-351.01	899	B-351.01	999	C-200.12

FORD MOTOR COMPANY
STANDARD PARTS

INDEX

THE TWO NUMBERS AT THE TOP OF THE NO. COLUMN ARE THE FIRST DIGITS OF THE FIVE DIGIT NUMBER AND FOLLOWING NUMBERS IN THE COLUMN ARE THE LAST THREE DIGITS OF THE FIVE DIGIT NUMBER.

No.	Page	No.	Page	No.	Page	No.	Page	No.	Page	No.	Page	No.	Page	No.	Page	No.	Page	No.	Page
36		36		36		36		36		36		36		36		36		36	
000	C-200.12	100	C-200.12	200	C-200.12	300	C-200.12	400	C-200.13	500	C-200.13	600	C-200.13	700	C-200.13	800	C-600.11	900	
001	C-200.12	101	C-200.12	201	C-200.12	301	C-200.12	401	C-200.13	501	C-200.13	601	C-200.13	701	C-200.13	801	C-600.11	901	
002	C-200.12	102	C-200.12	202	C-200.12	302	C-200.12	402	C-200.13	502	C-200.13	602	C-200.13	702	C-200.13	802	C-600.11	902	
003	C-200.12	103	C-200.12	203	C-200.12	303	C-200.12	403	C-200.13	503	C-200.13	603	C-200.13	703	C-200.13	803	C-600.11	903	
004	C-200.12	104	C-200.12	204	C-200.12	304	C-200.12	404	C-200.13	504	C-200.13	604	C-200.13	704	C-200.13	804	C-600.11	904	
005	C-200.12	105	C-200.12	205	C-200.12	305	C-200.12	405	C-200.13	505	C-200.13	605	C-200.13	705	C-200.13	805	C-600.11	905	
006	C-200.12	106	C-200.12	206	C-200.12	306	C-200.12	406	C-200.13	506	C-200.13	606	C-200.13	706	C-200.13	806	C-600.11	906	
007	C-200.12	107	C-200.12	207	C-200.12	307	C-200.12	407	C-200.13	507	C-200.13	607	C-200.13	707	C-200.13	807	C-600.11	907	C-600.11
008	C-200.12	108	C-200.12	208	C-200.12	308	C-200.12	408	C-200.13	508	C-200.13	608	C-200.13	708	C-200.13	808	C-600.11	908	C-600.11
009	C-200.12	109	C-200.12	209	C-200.12	309	C-200.12	409	C-200.13	509	C-200.13	609	C-200.13	709	C-200.13	809	C-600.11	909	C-600.11
010	C-200.12	110	C-200.12	210	C-200.12	310	C-200.12	410	C-200.13	510	C-200.13	610	C-200.13	710	C-200.13	810	C-600.11	910	C-600.11
011	C-200.12	111	C-200.12	211	C-200.12	311	C-200.12	411	C-200.13	511	C-200.13	611	C-200.13	711	C-200.13	811	C-600.11	911	C-600.11
012	C-200.12	112	C-200.12	212	C-200.12	312	C-200.12	412	C-200.13	512	C-200.13	612	C-200.13	712	C-200.13	812	C-600.11	912	C-600.11
013	C-200.12	113	C-200.12	213	C-200.12	313	C-200.12	413	C-200.13	513	C-200.13	613	C-200.13	713	C-200.13	813	C-600.11	913	C-600.11
014	C-200.12	114	C-200.12	214	C-200.12	314	C-200.12	414	C-200.13	514	C-200.13	614	C-200.13	714	C-200.13	814	C-600.11	914	C-600.11
015	C-200.12	115	C-200.12	215	C-200.12	315	C-200.12	415	C-200.13	515	C-200.13	615	C-200.13	715	C-200.13	815	C-600.11	915	C-600.11
016	C-200.12	116	C-200.12	216	C-200.12	316	C-200.12	416	C-200.13	516	C-200.13	616	C-200.13	716	C-200.13	816	C-600.11	916	C-600.11
017	C-200.12	117	C-200.12	217	C-200.12	317	C-200.12	417	C-200.13	517	C-200.13	617	C-200.13	717	C-200.13	817	C-600.11	917	C-600.11
018	C-200.12	118	C-200.12	218	C-200.12	318	C-200.12	418	C-200.13	518	C-200.13	618	C-200.13	718	C-200.13	818	C-600.11	918	C-600.11
019	C-200.12	119	C-200.12	219	C-200.12	319	C-200.12	419	C-200.13	519	C-200.13	619	C-200.13	719	C-200.13	819	C-600.11	919	C-600.11
020	C-200.12	120	C-200.12	220	C-200.12	320	C-200.12	420	C-200.13	520	C-200.13	620	C-200.13	720	C-200.13	820	C-600.11	920	C-600.11
021	C-200.12	121	C-200.12	221	C-200.12	321	C-200.12	421	C-200.13	521	C-200.13	621	C-200.13	721	C-200.13	821	C-600.11	921	C-600.11
022	C-200.12	122	C-200.12	222	C-200.12	322	C-200.12	422	C-200.13	522	C-200.13	622	C-200.13	722	C-200.13	822	C-600.11	922	C-600.11
023	C-200.12	123	C-200.12	223	C-200.12	323	C-200.12	423	C-200.13	523	C-200.13	623	C-200.13	723	C-200.13	823	C-600.11	923	C-600.11
024	C-200.12	124	C-200.12	224	C-200.12	324	C-200.12	424	C-200.13	524	C-200.13	624	C-200.13	724	C-200.13	824	C-600.11	924	C-600.11
025	C-200.12	125	C-200.12	225	C-200.12	325	C-200.12	425	C-200.13	525	C-200.13	625	C-200.13	725	C-200.13	825	C-600.11	925	C-600.11
026	C-200.12	126	C-200.12	226	C-200.12	326	C-200.12	426	C-200.13	526	C-200.13	626	C-200.13	726	C-200.13	826	C-600.11	926	C-600.11
027	C-200.12	127	C-200.12	227	C-200.12	327	C-200.12	427	C-200.13	527	C-200.13	627	C-200.13	727	C-200.13	827	C-600.11	927	C-600.11
028	C-200.12	128	C-200.12	228	C-200.12	328	C-200.12	428	C-200.13	528	C-200.13	628	C-200.13	728	C-200.13	828	C-600.11	928	C-600.11
029	C-200.12	129	C-200.12	229	C-200.12	329	C-200.12	429	C-200.13	529	C-200.13	629	C-200.13	729	C-200.13	829	C-600.11	929	C-600.11
030	C-200.12	130	C-200.12	230	C-200.12	330	C-200.12	430	C-200.13	530	C-200.13	630	C-200.13	730	C-200.13	830	C-600.11	930	C-600.11
031	C-200.12	131	C-200.12	231	C-200.12	331	C-200.12	431	C-200.13	531	C-200.13	631	C-200.13	731	C-200.13	831	C-600.11	931	C-600.11
032	C-200.12	132	C-200.12	232	C-200.12	332	C-200.12	432	C-200.13	532	C-200.13	632	C-200.13	732	C-200.13	832	C-600.11	932	C-600.11
033	C-200.12	133	C-200.12	233	C-200.12	333	C-200.12	433	C-200.13	533	C-200.13	633	C-200.13	733	C-200.13	833	C-600.11	933	C-600.11
034	C-200.12	134	C-200.12	234	C-200.12	334	C-200.12	434	C-200.13	534	C-200.13	634	C-200.13	734	C-200.13	834	C-600.11	934	C-600.11
035	C-200.12	135	C-200.12	235	C-200.12	335	C-200.12	435	C-200.13	535	C-200.13	635	C-200.13	735	C-200.13	835	C-600.11	935	C-600.11
036	C-200.12	136	C-200.12	236	C-200.12	336	C-200.12	436	C-200.13	536	C-200.13	636	C-200.13	736	C-200.13	836	C-600.11	936	C-600.11
037	C-200.12	137	C-200.12	237	C-200.12	337	C-200.12	437	C-200.13	537	C-200.13	637	C-200.13	737	C-200.13	837	C-600.11	937	C-600.11
038	C-200.12	138	C-200.12	238	C-200.12	338	C-200.12	438	C-200.13	538	C-200.13	638	C-200.13	738	C-200.13	838	C-600.11	938	C-600.11
039	C-200.12	139	C-200.12	239	C-200.12	339	C-200.12	439	C-200.13	539	C-200.13	639	C-200.13	739	C-200.13	839	C-600.11	939	C-600.11
040	C-200.12	140	C-200.12	240	C-200.12	340	C-200.12	440	C-200.13	540	C-200.13	640	C-200.13	740	C-200.13	840	C-600.11	940	C-600.11
041	C-200.12	141	C-200.12	241	C-200.12	341	C-200.12	441	C-200.13	541	C-200.13	641	C-200.13	741	C-200.13	841	C-600.11	941	C-600.11
042	C-200.12	142	C-200.12	242	C-200.12	342	C-200.12	442	C-200.13	542	C-200.13	642	C-200.13	742	C-200.13	842	C-600.11	942	C-600.11
043	C-200.12	143	C-200.12	243	C-200.12	343	C-200.12	443	C-200.13	543	C-200.13	643	C-200.13	743	C-200.13	843	C-600.11	943	C-600.11
044	C-200.12	144	C-200.12	244	C-200.12	344	C-200.12	444	C-200.13	544	C-200.13	644	C-200.13	744	C-200.13	844	C-600.11	944	C-600.11
045	C-200.12	145	C-200.12	245	C-200.12	345	C-200.12	445	C-200.13	545	C-200.13	645	C-200.13	745	C-200.13	845	C-600.11	945	C-600.11
046	C-200.12	146	C-200.12	246	C-200.12	346	C-200.12	446	C-200.13	546	C-200.13	646	C-200.13	746	C-200.13	846	C-600.11	946	C-600.11
047	C-200.12	147	C-200.12	247	C-200.12	347	C-200.12	447	C-200.13	547	C-200.13	647	C-200.13	747	C-200.13	847	C-600.11	947	C-600.11
048	C-200.12	148	C-200.12	248	C-200.12	348	C-200.12	448	C-200.13	548	C-200.13	648	C-200.13	748	C-200.13	848	C-600.11	948	C-600.11
049	C-200.12	149	C-200.12	249	C-200.12	349	C-200.12	449	C-200.13	549	C-200.13	649	C-200.13	749	C-200.13	849	C-600.11	949	C-600.11
050	C-200.12	150	C-200.12	250	C-200.12	350	C-200.12	450	C-200.13	550	C-200.13	650	C-200.13	750	C-200.13	850	C-600.11	950	C-600.11
051	C-200.12	151	C-200.12	251	C-200.12	351	C-200.12	451	C-200.13	551	C-200.13	651	C-200.13	751	C-200.13	851	C-600.11	951	C-600.11
052		152	C-200.12	252	C-200.12	352	C-200.12	452	C-200.13	552	C-200.13	652	C-200.13	752	C-200.13	852	C-600.11	952	C-600.11
053		153	C-200.12	253	C-200.12	353	C-200.12	453	C-200.13	553	C-200.13	653	C-200.13	753	C-200.13	853	C-600.11	953	C-600.11
054		154	C-200.12	254	C-200.12	354	C-200.12	454	C-200.13	554	C-200.13	654	C-200.13	754	C-200.13	854	C-600.11	954	C-600.11
055		155	C-200.12	255	C-200.12	355	C-200.12	455	C-200.13	555	C-200.13	655	C-200.13	755	C-200.13	855	C-600.11	955	C-600.11
056		156	C-200.12	256	C-200.12	356	C-200.12	456	C-200.13	556	C-200.13	656	C-200.13	756	C-200.13	856	C-600.11	956	C-600.11
057		157	C-200.12	257	C-200.12	357	C-200.12	457		557	C-200.13	657	C-200.13	757	C-200.13	857	C-600.11	957	C-600.11
058		158	C-200.12	258	C-200.12	358	C-200.12	458		558	C-200.13	658	C-200.13	758	C-200.13	858	C-600.11	958	C-600.11
059		159	C-200.12	259	C-200.12	359	C-200.12	459		559	C-200.13	659	C-200.13	759	C-200.13	859	C-600.11	959	C-600.11
060		160	C-200.12	260	C-200.12	360	C-200.12	460		560	C-200.13	660	C-200.13	760	C-200.13	860	C-600.11	960	C-600.11
061		161	C-200.12	261	C-200.12	361	C-200.12	461		561	C-200.13	661	C-200.13	761	C-200.13	861	C-600.11	961	C-600.11
062		162	C-200.12	262	C-200.12	362	C-200.12	462		562	C-200.13	662	C-200.13	762	C-200.13	862	C-600.11	962	C-600.11
063	C-200.12	163	C-200.12	263	C-200.12	363	C-200.12	463		563	C-200.13	663	C-200.13	763	C-200.13	863	C-600.11	963	C-600.11
064	C-200.12	164	C-200.12	264	C-200.12	364	C-200.12	464		564	C-200.13	664	C-200.13	764	C-200.13	864	C-600.11	964	C-600.11
065	C-200.12	165	C-200.12	265	C-200.12	365	C-200.12	465		565	C-200.13	665	C-200.13	765	C-200.13	865	C-600.11	965	C-600.11
066	C-200.12	166	C-200.12	266	C-200.12	366	C-200.12	466		566	C-200.13	666	C-200.13	766	C-200.13	866	C-600.11	966	C-600.11
067	C-200.12	167	C-200.12	267	C-200.12	367	C-200.12	467		567	C-200.13	667	C-200.13	767	C-200.13	867	C-600.11	967	C-600.11
068	C-200.12	168	C-200.12	268	C-200.12	368	C-200.12	468	C-200.13	568	C-200.13	668	C-200.13	768	C-200.13	868	C-600.11	968	C-600.11
069	C-200.12	169	C-200.12	269	C-200.12	369	C-200.12	469	C-200.13	569	C-200.13	669	C-200.13	769	C-200.13	879	C-600.11	969	C-600.11
070	C-200.12	170	C-200.12	270	C-200.12	370	C-200.12	470	C-200.13	570	C-200.13	670	C-200.13	770	C-200.13	870	C-600.11	970	C-600.11
071	C-200.12	171	C-200.12	271	C-200.12	371	C-200.13	471	C-200.13	571	C-200.13	671	C-200.13	771	C-200.13	871	C-600.11	971	C-600.11
072	C-200.12	172	C-200.12	272	C-200.12	372	C-200.13	472	C-200.13	572	C-200.13	672	C-200.13	772	C-200.13	872	C-600.11	972	C-600.11
073	C-200.12	173	C-200.12	273	C-200.12	373	C-200.13	473	C-200.13	573	C-200.13	673	C-200.13	773	C-200.13	873	C-600.11	973	C-600.11
074		174	C-200.12	274	C-200.12	374	C-200.13	474	C-200.13	574	C-200.13	674	C-200.13	774	C-200.13	874		974	C-600.11
075		175	C-200.12	275	C-200.12	375	C-200.13	475	C-200.13	575	C-200.13	675	C-200.13	775	C-200.13	875		975	C-600.11
076		176	C-200.12	276	C-200.12	376	C-200.13	476	C-200.13	576	C-200.13	676	C-200.13	776	C-600.11	876		976	C-600.11
077		177	C-200.12	277	C-200.12	377	C-200.13	477	C-200.13	577	C-200.13	677	C-200.13	777	C-600.11	877		977	C-600.11
078		178	C-200.12	278	C-200.12	378	C-200.13	478	C-200.13	578	C-200.13	678	C-200.13	778	C-600.11	878		978	C-600.11
079		179	C-200.12	279	C-200.12	379	C-200.13	479		579	C-200.13	679	C-200.13	779	C-600.11	879		979	C-600.11
080		180	C-200.12	280	C-200.12	380	C-200.13	480		580	C-200.13	680	C-200.13	780	C-600.11	880		980	C-600.11
081		181	C-200.12	281	C-200.12	381	C-200.13	481		581	C-200.13	681	C-200.13	781	C-600.11	881		981	C-600.11
082		182	C-200.12	282	C-200.12	382	C-200.13	482		582	C-200.13	682	C-200.13	782	C-600.11	882		982	C-600.11
083		183	C-200.12	283	C-200.12	383	C-200.13	483		583	C-200.13	683	C-200.13	783	C-600.11	883		983	C-600.11
084		184	C-200.12	284	C-200.12	384	C-200.13	484		584	C-200.13	684	C-200.13	784	C-600.11	884		984	C-600.11
085	C-200.12	185	C-200.12	285	C-200.12	385	C-200.13	485		585	C-200.13	685	C-200.13	785	C-600.11	885	C-600.11	985	C-600.11
086	C-200.12	186	C-200.12	286	C-200.12	386	C-200.13	486		586	C-200.13	686	C-200.13	786	C-600.11	886	C-600.11	986	C-600.11
087	C-200.12	187	C-200.12	287	C-200.12	387	C-200.13	487		587	C-200.13	687	C-200.13	787	C-600.11	887	C-600.11	987	C-600.11
088	C-200.12	188	C-200.12	288	C-200.12	388	C-200.13	488		588	C-200.13	688	C-200.13	788	C-600.11	888	C-600.11	988	C-600.11
089	C-200.12	189	C-200.12	289	C-200.12	389	C-200.13	489		589	C-200.13	689	C-200.13	789	C-600.11	889	C-600.11	989	C-600.11
090	C-200.12	190	C-200.12	290	C-200.12	390	C-200.13	490	C-200.13	590	C-200.13	690	C-200.13	790	C-600.11	890	C-600.11	990	C-600.11
091	C-200.12	191	C-200.12	291	C-200.12	391	C-200.13	491	C-200.13	591	C-200.13	691	C-200.13	791	C-600.11	891	C-600.11	991	C-600.11
092	C-200.12	192	C-200.12	292	C-200.12	392	C-200.13	492	C-200.13	592	C-200.13	692	C-200.13	792	C-600.11	892	C-600.11	992	C-600.11
093	C-200.12	193	C-200.12	293	C-200.12	393	C-200.13	493	C-200.13	593	C-200.13	693	C-200.13	793	C-600.11	893	C-600.11	993	C-600.11
094	C-200.12	194	C-200.12	294	C-200.12	394	C-200.13	494	C-200.13	594	C-200.13	694	C-200.13	794	C-600.11	894	C-600.11	994	C-600.11
095	C-200.12	195	C-200.12	295	C-200.12	395	C-200.13	495	C-200.13	595	C-200.13	695	C-200.13	795	C-600.11	895	C-600.11	995	C-600.11
096	C-200.12	196	C-200.12	296	C-200.12	396	C-200.13	496	C-200.13	596	C-200.13	696	C-200.13	796	C-600.11	896		996	C-600.11
097	C-200.12	197	C-200.12	297	C-200.12	397	C-200.13	497	C-200.13	597	C-200.13	697	C-200.13	797	C-600.11	897		997	C-600.11
098	C-200.12	198	C-200.12	298	C-200.12	398	C-200.13	498	C-200.13	598	C-200.13	698	C-200.13	798	C-600.11	898		998	C-600.11
099	C-200.12	199	C-200.12	299	C-200.12	399	C-200.13	499	C-200.13	599	C-200.13	699	C-200.13	799	C-600.11	899		999	C-600.11

FORD MOTOR COMPANY
STANDARD PARTS

INDEX

THE TWO NUMBERS AT THE TOP OF THE NO. COLUMN ARE THE FIRST DIGITS OF THE FIVE DIGIT NUMBER AND FOLLOWING NUMBERS IN THE COLUMN ARE THE LAST THREE DIGITS OF THE FIVE DIGIT NUMBER.

No.	Page	No.	Page	No.	Page	No.	Page	No.	Page	No.	Page	No.	Page	No.	Page	No.	Page	No.	Page
37		37		37		37		37		37		37		37		37		37	
000	C-600.11	100	C-600.11	200	C-600.12	300	C-600.12	400	C-600.12	500	C-600.12	600	C-100.12	700	C-100.12	800	C-100.12	900	C-100.12
001	C-600.11	101	C-600.11	201	C-600.12	301		401	C-600.12	501	C-600.12	601	C-100.12	701	C-100.12	801	C-100.12	901	C-100.12
002	C-600.11	102	C-600.11	202	C-600.12	302		402	C-600.12	502	C-600.12	602	C-100.12	702	C-100.12	802	C-100.12	902	C-100.12
003	C-600.11	103	C-600.11	203	C-600.12	303		403	C-600.12	503	C-600.12	603	C-100.12	703	C-100.12	803	C-100.12	903	C-100.12
004	C-600.11	104	C-600.11	204	C-600.12	304		404	C-600.12	504	C-600.12	604	C-100.12	704	C-100.12	804	C-100.12	904	C-100.12
005	C-600.11	105	C-600.11	205	C-600.12	305		405	C-600.12	505	C-600.12	605	C-100.12	705	C-100.12	805	C-100.12	905	C-100.12
006	C-600.11	106	C-600.11	206	C-600.12	306		406	C-600.12	506	C-600.12	606	C-100.12	706	C-100.12	806	C-100.12	906	C-100.12
007	C-600.11	107	C-600.11	207	C-600.12	307		407	C-600.12	507	C-600.12	607	C-100.12	707	C-100.12	807	C-100.12	907	C-100.12
008	C-600.11	108	C-600.11	208	C-600.12	308		408	C-600.12	508	C-600.12	608	C-100.12	708		808	C-100.12	908	C-100.12
009	C-600.11	109	C-600.11	209	C-600.12	309		409	C-600.12	509	C-600.12	609	C-100.12	709		809	C-100.12	909	C-100.12
010	C-600.11	110	C-600.11	210	C-600.12	310		410	C-600.12	510	C-600.12	610	C-100.12	710		810	C-100.12	910	C-100.12
011	C-600.11	111	C-600.11	211	C-600.12	311		411	C-600.12	511	C-600.12	611	C-100.12	711		811	C-100.12	911	C-100.12
012	C-600.11	112	C-600.11	212	C-600.12	312	C-600.12	412	C-600.12	512	C-600.12	612	C-100.12	712		812	C-100.12	912	C-100.12
013	C-600.11	113	C-600.11	213	C-600.12	313	C-600.12	413	C-600.12	513	C-600.12	613	C-100.12	713		813	C-100.12	913	C-100.12
014	C-600.11	114	C-600.11	214	C-600.12	314	C-600.12	414	C-600.12	514	C-600.12	614	C-100.12	714		814	C-100.12	914	C-100.12
015	C-600.11	115	C-600.11	215	C-600.12	315	C-600.12	415	C-600.12	515	C-600.12	615	C-100.12	715		815	C-100.12	915	C-100.12
016	C-600.11	116	C-600.11	216	C-600.12	316	C-600.12	416	C-600.12	516	C-600.12	616	C-100.12	716		816	C-100.12	916	C-100.12
017	C-600.11	117	C-600.11	217	C-600.12	317	C-600.12	417	C-600.12	517	C-600.12	617	C-100.12	717		817	C-100.12	917	C-100.12
018	C-600.11	118	C-600.11	218	C-600.12	318	C-600.12	418	C-600.12	518	C-600.12	618	C-100.12	718		818	C-100.12	918	C-100.12
019	C-600.11	119	C-600.11	219	C-600.12	319	C-600.12	419	C-600.12	519	C-600.12	619	C-100.12	719	C-100.12	819	C-100.12	919	C-100.12
020	C-600.11	120	C-600.11	220	C-600.12	320	C-600.12	420	C-600.12	520	C-600.12	620	C-100.12	720	C-100.12	820	C-100.12	920	C-100.12
021	C-600.11	121	C-600.11	221	C-600.12	321	C-600.12	421	C-600.12	521	C-600.12	621	C-100.12	721	C-100.12	821	C-100.12	921	C-100.12
022	C-600.11	122	C-600.11	222	C-600.12	322	C-600.12	422	C-600.12	522	C-600.12	622	C-100.12	722	C-100.12	822	C-100.12	922	C-100.12
023	C-600.11	123	C-600.11	223	C-600.12	323	C-600.12	423	C-600.12	523	C-600.12	623	C-100.12	723	C-100.12	823	C-100.12	923	C-100.12
024	C-600.11	124	C-600.11	224	C-600.12	324	C-600.12	424	C-600.12	524	C-600.12	624	C-100.12	724	C-100.12	824	C-100.12	924	C-100.12
025	C-600.11	125	C-600.11	225	C-600.12	325	C-600.12	425	C-600.12	525	C-600.12	625	C-100.12	725	C-100.12	825	C-100.12	925	C-100.12
026	C-600.11	126	C-600.11	226	C-600.12	326	C-600.12	426	C-600.12	526	C-600.12	626	C-100.12	726	C-100.12	826	C-100.12	926	C-100.12
027	C-600.11	127	C-600.11	227	C-600.12	327	C-600.12	427	C-600.12	527	C-600.12	627	C-100.12	727	C-100.12	827	C-100.12	927	C-100.12
028	C-600.11	128	C-600.11	228	C-600.12	328	C-600.12	428	C-600.12	528	C-600.12	628	C-100.12	728	C-100.12	828	C-100.12	928	C-100.12
029	C-600.11	129	C-600.11	229	C-600.12	329	C-600.12	429	C-600.12	529	C-600.12	629	C-100.12	729	C-100.12	829	C-100.12	929	C-100.12
030	C-600.11	130	C-600.11	230	C-600.12	330	C-600.12	430	C-600.12	530	C-600.12	630	C-100.12	730		830	C-100.12	930	C-100.12
031	C-600.11	131	C-600.11	231	C-600.12	331	C-600.12	431	C-600.12	531	C-600.12	631	C-100.12	731		831	C-100.12	931	C-100.12
032	C-600.11	132	C-600.11	232	C-600.12	332	C-600.12	432	C-600.12	532	C-600.12	632	C-100.12	732		832	C-100.12	932	C-100.12
033	C-600.11	133	C-600.11	233	C-600.12	333	C-600.12	433	C-600.12	533	C-600.12	633	C-100.12	733		833	C-100.12	933	C-100.12
034	C-600.11	134	C-600.11	234	C-600.12	334	C-600.12	434	C-600.12	534	C-600.12	634	C-100.12	734		834	C-100.12	934	C-100.12
035	C-600.11	135	C-600.11	235	C-600.12	335	C-600.12	435	C-600.12	535	C-600.12	635	C-100.12	735		835	C-100.12	935	C-100.12
036	C-600.11	136	C-600.11	236	C-600.12	336	C-600.12	436	C-600.12	536	C-600.12	636	C-100.12	736		836	C-100.12	936	C-100.12
037	C-600.11	137	C-600.11	237	C-600.12	337	C-600.12	437	C-600.12	537	C-600.12	637	C-100.12	737		837	C-100.12	937	C-100.12
038	C-600.11	138	C-600.11	238	C-600.12	338	C-600.12	438	C-600.12	538	C-600.12	638	C-100.12	738		838	C-100.12	938	C-100.12
039	C-600.11	139	C-600.11	239	C-600.12	339	C-600.12	439	C-600.12	539	C-600.12	639	C-100.12	739		839	C-100.12	939	
040	C-600.11	140	C-600.11	240	C-600.12	340	C-600.12	440	C-600.12	540	C-600.12	640	C-100.12	740		840	C-100.12	940	
041	C-600.11	141	C-600.11	241	C-600.12	341	C-600.12	441	C-600.12	541	C-600.12	641	C-100.12	741	C-100.12	841	C-100.12	941	
042	C-600.11	142	C-600.11	242	C-600.12	342	C-600.12	442	C-600.12	542	C-600.12	642	C-100.12	742	C-100.12	842	C-100.12	942	
043	C-600.11	143	C-600.11	243	C-600.12	343	C-600.12	443	C-600.12	543	C-600.12	643	C-100.12	743	C-100.12	843	C-100.12	943	
044	C-600.11	144	C-600.11	244	C-600.12	344	C-600.12	444	C-600.12	544	C-600.12	644	C-100.12	744	C-100.12	844	C-100.12	944	
045	C-600.11	145	C-600.11	245	C-600.12	345	C-600.12	445	C-600.12	545	C-600.12	645	C-100.12	745	C-100.12	845	C-100.12	945	
046	C-600.11	146	C-600.11	246	C-600.12	346	C-600.12	446	C-600.12	546	C-600.12	646	C-100.12	746	C-100.12	846	C-100.12	946	
047	C-600.11	147	C-600.11	247	C-600.12	347	C-600.12	447	C-600.12	547	C-600.12	647	C-100.12	747	C-100.12	847	C-100.12	947	
048	C-600.11	148	C-600.11	248	C-600.12	348	C-600.12	448	C-600.12	548	C-600.12	648	C-100.12	748	C-100.12	848	C-100.12	948	
049	C-600.11	149	C-600.11	249	C-600.12	349	C-600.12	449	C-600.12	549	C-600.12	649	C-100.12	749	C-100.12	849	C-100.12	949	
050	C-600.11	150	C-600.11	250	C-600.12	350	C-600.12	450	C-600.12	550	C-600.12	650	C-100.12	750	C-100.12	850	C-100.12	950	
051	C-600.11	151	C-600.11	251	C-600.12	351	C-600.12	451	C-600.12	551	C-600.12	651	C-100.12	751	C-100.12	851	C-100.12	951	
052	C-600.11	152	C-600.11	252	C-600.12	352	C-600.12	452	C-600.12	552	C-600.12	652	C-100.12	752	C-100.12	852	C-100.12	952	
053	C-600.11	153	C-600.11	253	C-600.12	353	C-600.12	453	C-600.12	553	C-600.12	653	C-100.12	753	C-100.12	853	C-100.12	953	
054	C-600.11	154	C-600.11	254	C-600.12	354	C-600.12	454	C-600.12	554	C-600.12	654	C-100.12	754	C-100.12	854	C-100.12	954	
055	C-600.11	155	C-600.11	255	C-600.12	355	C-600.12	455	C-600.12	555	C-600.12	655	C-100.12	755	C-100.12	855	C-100.12	955	
056	C-600.11	156	C-600.11	256	C-600.12	356	C-600.12	456	C-600.12	556	C-600.12	656	C-100.12	756	C-100.12	856	C-100.12	956	
057	C-600.11	157	C-600.11	257	C-600.12	357	C-600.12	457	C-600.12	557	C-600.12	657	C-100.12	757	C-100.12	857	C-100.12	957	
058	C-600.11	158	C-600.11	258	C-600.12	358	C-600.12	458	C-600.12	558	C-600.12	658	C-100.12	758	C-100.12	858	C-100.12	958	
059	C-600.11	159	C-600.11	259	C-600.12	359	C-600.12	459	C-600.12	559	C-600.12	659	C-100.12	759	C-100.12	859	C-100.12	959	
060	C-600.11	160	C-600.11	260	C-600.12	360	C-600.12	460	C-600.12	560	C-600.12	660	C-100.12	760	C-100.12	860	C-100.12	960	
061	C-600.11	161	C-600.11	261	C-600.12	361	C-600.12	461	C-600.12	561	C-600.12	661	C-100.12	761	C-100.12	861	C-100.12	961	
062	C-600.11	162	C-600.11	262	C-600.12	362	C-600.12	462	C-600.12	562	C-600.12	662	C-100.12	762	C-100.12	862	C-100.12	962	
063	C-600.11	163	C-600.11	263	C-600.12	363	C-600.12	463	C-600.12	563	C-600.12	663	C-100.12	763	C-100.12	863	C-100.12	963	
064	C-600.11	164	C-600.11	264	C-600.12	364	C-600.12	464	C-600.12	564	C-600.12	664	C-100.12	764	C-100.12	864	C-100.12	964	
065	C-600.11	165	C-600.11	265	C-600.12	365	C-600.12	465	C-600.12	565	C-600.12	665	C-100.12	765	C-100.12	865	C-100.12	965	
066	C-600.11	166	C-600.11	266	C-600.12	366	C-600.12	466	C-600.12	566	C-600.12	666	C-100.12	766	C-100.12	866	C-100.12	966	
067	C-600.11	167	C-600.11	267	C-600.12	367	C-600.12	467	C-600.12	567	C-600.12	667	C-100.12	767	C-100.12	867	C-100.12	967	
068	C-600.11	168	C-600.11	268	C-600.12	368	C-600.12	468	C-600.12	568	C-600.12	668	C-100.12	768	C-100.12	868	C-100.12	968	
069	C-600.11	169	C-600.11	269	C-600.12	369	C-600.12	469	C-600.12	569	C-600.12	669	C-100.12	769	C-100.12	879	C-100.12	969	
070	C-600.11	170	C-600.11	270	C-600.12	370	C-600.12	470	C-600.12	570	C-600.12	670	C-100.12	770	C-100.12	870	C-100.12	970	
071	C-600.11	171	C-600.11	271	C-600.12	371	C-600.12	471	C-600.12	571	C-600.12	671	C-100.12	771	C-100.12	871	C-100.12	971	
072	C-600.11	172	C-600.11	272	C-600.12	372	C-600.12	472	C-600.12	572	C-600.12	672	C-100.12	772	C-100.12	872	C-100.12	972	
073	C-600.11	173	C-600.11	273	C-600.12	373	C-600.12	473	C-600.12	573	C-600.12	673	C-100.12	773	C-100.12	873	C-100.12	973	
074	C-600.11	174	C-600.11	274	C-600.12	374	C-600.12	474	C-600.12	574	C-600.12	674	C-100.12	774	C-100.12	874	C-100.12	974	
075	C-600.11	175	C-600.11	275	C-600.12	375	C-600.12	475	C-600.12	575	C-600.12	675	C-100.12	775	C-100.12	875	C-100.12	975	
076	C-600.11	176	C-600.11	276	C-600.12	376	C-600.12	476	C-600.12	576	C-600.12	676	C-100.12	776	C-100.12	876	C-100.12	976	
077	C-600.11	177	C-600.11	277	C-600.12	377	C-600.12	477	C-600.12	577	C-600.12	677	C-100.12	777	C-100.12	877	C-100.12	977	
078	C-600.11	178	C-600.11	278	C-600.12	378	C-600.12	478	C-600.12	578	C-600.12	678	C-100.12	778	C-100.12	878	C-100.12	978	
079	C-600.11	179	C-600.11	279		379	C-600.12	479	C-600.12	579	C-600.12	679	C-100.12	779	C-100.12	879	C-100.12	979	
080	C-600.11	180	C-600.11	280		380	C-600.12	480	C-600.12	580	C-600.12	680	C-100.12	780	C-100.12	880	C-100.12	980	
081	C-600.11	181	C-600.11	281		381	C-600.12	481	C-600.12	581	C-600.12	681	C-100.12	781	C-100.12	881	C-100.12	981	
082	C-600.11	182	C-600.11	282		382	C-600.12	482	C-600.12	582	C-600.12	682	C-100.12	782	C-100.12	882	C-100.12	982	
083	C-600.11	183	C-600.11	283		383	C-600.12	483	C-600.12	583	C-600.12	683	C-100.12	783	C-100.12	883	C-100.12	983	
084	C-600.11	184	C-600.11	284		384	C-600.12	484	C-600.12	584	C-600.12	684	C-100.12	784	C-100.12	884	C-100.12	984	
085	C-600.11	185	C-600.11	285		385	C-600.12	485	C-600.12	585	C-600.12	685	C-100.12	785	C-100.12	885	C-100.12	985	
086	C-600.11	186	C-600.11	286		386	C-600.12	486	C-600.12	586	C-600.12	686	C-100.12	786	C-100.12	886	C-100.12	986	
087	C-600.11	187	C-600.11	287		387	C-600.12	487	C-600.12	587	C-600.12	687	C-100.12	787	C-100.12	887	C-100.12	987	
088	C-600.11	188	C-600.11	288		388	C-600.12	488	C-600.12	588	C-600.12	688	C-100.12	788	C-100.12	888	C-100.12	988	
089	C-600.11	189	C-600.11	289		389	C-600.12	489	C-600.12	589	C-600.12	689	C-100.12	789	C-100.12	889	C-100.12	989	
090	C-600.11	190	C-600.11	290	C-600.12	390	C-600.12	490	C-600.12	590	C-600.12	690	C-100.12	790	C-100.12	890	C-100.12	990	
091	C-600.11	191	C-600.11	291	C-600.12	391	C-600.12	491	C-600.12	591	C-600.12	691	C-100.12	791	C-100.12	891	C-100.12	991	
092	C-600.11	192	C-600.11	292	C-600.12	392	C-600.12	492	C-600.12	592	C-600.12	692	C-100.12	792	C-100.12	892	C-100.12	992	
093	C-600.11	193	C 600.12	293	C-600.12	393	C-600.12	493	C-600.12	593	C-600.12	693	C-100.12	793	C-100.12	893	C-100.12	993	
094	C-600.11	194	C-600.12	294	C-600.12	394	C-600.12	494	C-600.12	594	C-600.12	694	C-100.12	794	C-100.12	894	C-100.12	994	C-100.12
095	C-600.11	195	C-600.12	295	C-600.12	395	C-600.12	495	C-600.12	595	C-600.12	695	C-100.12	795	C-100.12	895	C-100.12	995	C-100.12
096	C-600.11	196	C-600.12	296	C-600.12	396	C-600.12	496	C-600.12	596	C-600.12	696	C-100.12	796	C-100.12	896	C-100.12	996	C-100.12
097	C-600.11	197	C-600.12	297	C-600.12	397	C-600.12	497	C-600.12	597	C-600.12	697	C-100.12	797	C-100.12	897	C-100.12	997	C-100.12
098	C-600.11	198	C-600.12	298	C-600.12	398	C-600.12	498	C-600.12	598	C-100.12	698	C-100.12	798	C-100.12	898	C-100.12	998	C-100.12
099	C-600.11	199	C-600.12	299	C-600.12	399	C-600.12	499	C-600.12	599	C-100.12	699	C-100.12	799	C-100.12	899	C-100.12	999	C-100.12

FORD MOTOR COMPANY
STANDARD PARTS

INDEX

THE TWO NUMBERS AT THE TOP OF THE NO. COLUMN ARE THE FIRST DIGITS OF THE FIVE DIGIT NUMBER AND FOLLOWING NUMBERS IN THE COLUMN ARE THE LAST THREE DIGITS OF THE FIVE DIGIT NUMBER.

No.	Page	No.	Page	No.	Page	No.	Page	No.	Page	No.	Page	No.	Page	No.	Page	No.	Page	No.	Page
38		38		38		38		38		38		38		38		38		38	
000	C-100.12	100	C-100.12	200	C-500.02	300	C-500.02	400	C-500.02	500	C-500.02	600	C-500.03	700	C-500.03	800	C-500.03	900	C-500.03
001	C-100.12	101	C-100.12	201	C-500.02	301	C-500.02	401	C-500.02	501	C-500.02	601	C-500.03	701	C-500.03	801	C-500.03	901	C-500.03
002	C-100.12	102	C-100.12	202	C-500.02	302	C-500.02	402	C-500.02	502	C-500.02	602	C-500.03	702	C-500.03	802	C-500.03	902	C-500.03
003	C-100.12	103	C-100.12	203	C-500.02	303	C-500.02	403	C-500.02	503	C-500.02	603	C-500.03	703	C-500.03	803	C-500.03	903	C-500.03
004	C-100.12	104		204	C-500.02	304	C-500.02	404	C-500.02	504	C-500.02	604	C-500.03	704	C-500.03	804	C-500.03	904	C-500.03
005	C-100.12	105		205	C-500.02	305	C-500.02	405	C-500.02	505	C-500.02	605	C-500.03	705	C-500.03	805	C-500.03	905	C-500.03
006	C-100.12	106		206	C-500.02	306	C-500.02	406	C-500.02	506	C-500.02	606	C-500.03	706	C-500.03	806	C-500.03	906	C-500.03
007	C-100.12	107		207	C-500.02	307	C-500.02	407	C-500.02	507	C-500.02	607	C-500.03	707		807	C-500.03	907	C-500.03
008	C-100.12	108		208	C-500.02	308	C-500.02	408	C-500.02	508	C-500.02	608	C-500.03	708		808	C-500.03	908	C-500.03
009	C-100.12	109		209	C-500.02	309	C-500.02	409	C-500.02	509	C-500.02	609	C-500.03	709		809	C-500.03	909	C-500.03
010	C-100.12	110		210	C-500.02	310	C-500.02	410	C-500.02	510	C-500.02	610	C-500.03	710		810	C-500.03	910	C-500.03
011	C-100.12	111		211	C-500.02	311	C-500.02	411	C-500.02	511	C-500.02	611	C-500.03	711		811	C-500.03	911	C-500.03
012	C-100.12	112		212	C-500.02	312	C-500.02	412	C-500.02	512	C-500.02	612	C-500.03	712		812	C-500.03	912	C-500.03
013	C-100.12	113		213	C-500.02	313	C-500.02	413	C-500.02	513	C-500.02	613	C-500.03	713		813	C-500.03	913	C-500.03
014	C-100.12	114		214	C-500.02	314	C-500.02	414	C-500.02	514	C-500.02	614	C-500.03	714		814	C-500.03	914	C-500.03
015	C-100.12	115	C-100.12	215	C-500.02	315	C-500.02	415	C-500.02	515	C-500.02	615	C-500.03	715		815	C-500.03	915	C-500.03
016	C-100.12	116	C-100.12	216	C-500.02	316	C-500.02	416	C-500.02	516	C-500.02	616	C-500.03	716		816	C-500.03	916	C-500.03
017	C-100.12	117	C-100.12	217	C-500.02	317	C-500.02	417	C-500.02	517	C-500.02	617	C-500.03	717		817	C-500.03	917	C-500.03
018	C-100.12	118	C-100.12	218	C-500.02	318	C-500.02	418	C-500.02	518	C-500.02	618	C-500.03	718	C-500.03	818	C-500.03	918	C-500.03
019	C-100.12	119	C-100.12	219	C-500.02	319	C-500.02	419	C-500.02	519	C-500.02	619	C-500.03	719	C-500.03	819	C-500.03	919	C-500.03
020	C-100.12	120	C-100.12	220	C-500.02	320	C-500.02	420	C-500.02	520	C-500.02	620	C-500.03	720	C-500.03	820	C-500.03	920	C-500.03
021	C-100.12	121	C-100.12	221	C-500.02	321	C-500.02	421	C-500.02	521	C-500.02	621	C-500.03	721	C-500.03	821	C-500.03	921	C-500.03
022	C-100.12	122	C-100.12	222	C-500.02	322	C-500.02	422	C-500.02	522	C-500.02	622	C-500.03	722	C-500.03	822	C-500.03	922	C-500.03
023	C-100.12	123	C-100.12	223	C-500.02	323	C-500.02	423	C-500.02	523	C-500.02	623	C-500.03	723	C-500.03	823	C-500.03	923	C-500.03
024	C-100.12	124	C-100.12	224	C-500.02	324	C-500.02	424	C-500.02	524	C-500.02	624	C-500.03	724	C-500.03	824	C-500.03	924	C-500.03
025	C-100.12	125	C-100.12	225	C-500.02	325	C-500.02	425	C-500.02	525	C-500.02	625	C-500.03	725	C-500.03	825	C-500.03	925	C-500.03
026	C-100.12	126		226	C-500.02	326	C-500.02	426	C-500.02	526	C-500.02	626	C-500.03	726	C-500.03	826	C-500.03	926	C-500.03
027	C-100.12	127		227	C-500.02	327	C-500.02	427	C-500.02	527	C-500.02	627	C-500.03	727	C-500.03	827	C-500.03	927	C-500.03
028	C-100.12	128		228	C-500.02	328	C-500.02	428	C-500.02	528	C-500.02	628	C-500.03	728	C-500.03	828	C-500.03	928	C-500.03
029	C-100.12	129		229	C-500.02	329	C-500.02	429	C-500.02	529	C-500.02	629	C-500.03	729	C-500.03	829	C-500.03	929	C-500.03
030	C-100.12	130		230	C-500.02	330	C-500.02	430	C-500.02	530	C-500.02	630	C-500.03	730	C-500.03	830	C-500.03	930	C-500.03
031	C-100.12	131		231	C-500.02	331	C-500.02	431	C-500.02	531	C-500.02	631	C-500.03	731	C-500.03	831	C-500.03	931	C-500.03
032	C-100.12	132		232	C-500.02	332	C-500.02	432	C-500.02	532	C-500.02	632	C-500.03	732	C-500.03	832	C-500.03	932	C-500.03
033	C-100.12	133		233	C-500.02	333	C-500.02	433	C-500.02	533	C-500.02	633	C-500.03	733	C-500.03	833	C-500.03	933	C-500.03
034	C-100.12	134		234	C-500.02	334	C-500.02	434	C-500.02	534	C-500.02	634	C-500.03	734	C-500.03	834	C-500.03	934	C-500.03
035	C-100.12	135		235	C-500.02	335	C-500.02	435	C-500.02	535	C-500.02	635	C-500.03	735	C-500.03	835	C-500.03	935	C-500.03
036	C-100.12	136		236	C-500.02	336	C-500.02	436	C-500.02	536	C-500.02	636	C-500.03	736	C-500.03	836	C-500.03	936	C-500.03
037	C-100.12	137	C-100.12	237	C-500.02	337	C-500.02	437	C-500.02	537	C-500.02	637	C-500.03	737	C-500.03	837	C-500.03	937	C-500.03
038	C-100.12	138	C-100.12	238	C-500.02	338	C-500.02	438	C-500.02	538	C-500.02	638	C-500.03	738	C-500.03	838	C-500.03	938	C-500.03
039	C-100.12	139	C-100.12	239	C-500.02	339	C-500.02	439	C-500.02	539	C-500.02	639	C-500.03	739	C-500.03	839	C-500.03	939	C-500.03
040	C-100.12	140	C-100.12	240	C-500.02	340	C-500.02	440	C-500.02	540	C-500.02	640	C-500.03	740	C-500.03	840	C-500.03	940	C-500.03
041	C-100.12	141	C-100.12	241	C-500.02	341	C-500.02	441	C-500.02	541	C-500.02	641	C-500.03	741	C-500.03	841	C-500.03	941	C-500.03
042	C-100.12	142	C-100.12	242	C-500.02	342	C-500.02	442	C-500.02	542	C-500.02	642	C-500.03	742	C-500.03	842	C-500.03	942	C-500.03
043	C-100.12	143	C-100.12	243	C-500.02	343	C-500.02	443	C-500.02	543	C-500.02	643	C-500.03	743	C-500.03	843	C-500.03	943	C-500.03
044	C-100.12	144	C-100.12	244	C-500.02	344	C-500.02	444	C-500.02	544	C-500.02	644	C-500.03	744	C-500.03	844	C-500.03	944	C-500.03
045	C-100.12	145	C-100.12	245	C-500.02	345	C-500.02	445	C-500.02	545	C-500.02	645	C-500.03	745	C-500.03	845	C-500.03	945	C-500.03
046	C-100.12	146	C-100.12	246	C-500.02	346	C-500.02	446	C-500.02	546	C-500.02	646	C-500.03	746	C-500.03	846	C-500.03	946	C-500.03
047	C-100.12	147	C-100.12	247	C-500.02	347	C-500.02	447	C-500.02	547	C-500.02	647	C-500.03	747	C-500.03	847	C-500.03	947	C-500.03
048	C-100.12	148	C-100.12	248	C-500.02	348	C-500.02	448	C-500.02	548	C-500.02	648	C-500.03	748	C-500.03	848	C-500.03	948	C-500.03
049	C-100.12	149	C-100.12	249	C-500.02	349	C-500.02	449	C-500.02	549	C-500.02	649	C-500.03	749	C-500.03	849	C-500.03	949	C-500.03
050	C-100.12	150	C-100.12	250	C-500.02	350	C-500.02	450	C-500.02	550	C-500.02	650	C-500.03	750	C-500.03	850	C-500.03	950	C-500.03
051	C-100.12	151	C-100.12	251	C-500.02	351	C-500.02	451	C-500.02	551	C-500.02	651	C-500.03	751	C-500.03	851	C-500.03	951	C-500.03
052	C-100.12	152	C-100.12	252	C-500.02	352	C-500.02	452	C-500.02	552	C-500.02	652	C-500.03	752	C-500.03	852	C-500.03	952	C-500.03
053	C-100.12	153	C-100.12	253	C-500.02	353	C-500.02	453	C-500.02	553	C-500.02	653	C-500.03	753	C-500.03	853	C-500.03	953	C-500.03
054	C-100.12	154	C-100.12	254	C-500.02	354	C-500.02	454	C-500.02	554	C-500.02	654	C-500.03	754	C-500.03	854	C-500.03	954	C-500.03
055	C-100.12	155	C-100.12	255	C-500.02	355	C-500.02	455	C-500.02	555	C-500.02	655	C-500.03	755	C-500.03	855	C-500.03	955	C-500.03
056	C-100.12	156	C-100.12	256		356	C-500.02	456	C-500.02	556	C-500.02	656	C-500.03	756	C-500.03	856	C-500.03	956	C-500.03
057	C-100.12	157	C-100.12	257		357	C-500.02	457	C-500.02	557	C-500.02	657	C-500.03	757	C-500.03	857	C-500.03	957	C-500.03
058	C-100.12	158	C-100.12	258		358	C-500.02	458	C-500.02	558	C-500.02	658	C-500.03	758	C-500.03	858	C-500.03	958	C-500.03
059	C-100.12	159	C-100.12	259		359	C-500.02	459	C-500.02	559	C-500.02	659	C-500.03	759	C-500.03	859	C-500.03	959	C-500.03
060	C-100.12	160	C-100.12	260		360	C-500.02	460	C-500.02	560	C-500.02	660	C-500.03	760	C-500.03	860	C-500.03	960	C-500.03
061	C-100.12	161	C-100.12	261		361	C-500.02	461	C-500.02	561	C-500.02	661	C-500.03	761	C-500.03	861	C-500.03	961	C-500.03
062	C-100.12	162	C-100.12	262		362	C-500.02	462	C-500.02	562	C-500.02	662	C-500.03	762	C-500.03	862	C-500.03	962	C-500.03
063	C-100.12	163	C-100.12	263		363	C-500.02	463	C-500.02	563	C-500.02	663	C-500.03	763	C-500.03	863	C-500.03	963	C-500.03
064	C-100.12	164	C-100.12	264		364	C-500.02	464	C-500.02	564	C-500.02	664	C-500.03	764	C-500.03	864	C-500.03	964	C-500.03
065	C-100.12	165	C-100.12	265		365	C-500.02	465	C-500.02	565	C-500.02	665	C-500.03	765	C-500.03	865	C-500.03	965	C-500.03
066	C-100.12	166	C-100.12	266		366	C-500.02	466	C-500.02	566	C-500.02	666	C-500.03	766	C-500.03	866	C-500.03	966	C-500.03
067	C-100.12	167	C-100.12	267	C-500.02	367	C-500.02	467	C-500.02	567	C-500.02	667	C-500.03	767	C-500.03	867	C-500.03	967	C-500.03
068	C-100.12	168	C-100.12	268	C-500.02	368	C-500.02	468	C-500.02	568	C-500.02	668	C-500.03	768	C-500.03	868	C-500.03	968	C-500.03
069	C-100.12	169	C-100.12	269	C-500.02	369	C-500.02	469	C-500.02	569	C-500.02	669	C-500.03	769	C-500.03	879	C-500.03	969	C-500.03
070	C-100.12	170	C-500.02	270	C-500.02	370	C-500.02	470	C-500.02	570	C-500.02	670	C-500.03	770	C-500.03	870	C-500.03	970	C-500.03
071	C-100.12	171	C-500.02	271	C-500.02	371	C-500.02	471	C-500.02	571	C-500.02	671	C-500.03	771	C-500.03	871	C-500.03	971	C-500.03
072	C-100.12	172	C-500.02	272	C-500.02	372	C-500.02	472	C-500.02	572	C-500.02	672	C-500.03	772	C-500.03	872	C-500.03	972	C-500.03
073	C-100.12	173	C-500.02	273	C-500.02	373	C-500.02	473	C-500.02	573	C-500.02	673	C-500.03	773	C-500.03	873	C-500.03	973	C-500.03
074	C-100.12	174	C-500.02	274	C-500.02	374	C-500.02	474	C-500.02	574	C-500.02	674	C-500.03	774	C-500.03	874	C-500.03	974	C-500.03
075	C-100.12	175	C-500.02	275	C-500.02	375	C-500.02	475	C-500.02	575	C-500.03	675	C-500.03	775	C-500.03	875	C-500.03	975	C-500.03
076	C-100.12	176	C-500.02	276	C-500.02	376	C-500.02	476	C-500.02	576	C-500.03	676	C-500.03	776	C-500.03	876	C-500.03	976	C-500.03
077	C-100.12	177	C-500.02	277	C-500.02	377	C-500.02	477	C-500.02	577	C-500.03	677	C-500.03	777	C-500.03	877	C-500.03	977	C-500.03
078	C-100.12	178	C-500.02	278		378	C-500.02	478	C-500.02	578	C-500.03	678	C-500.03	778	C-500.03	878	C-500.03	978	C-500.03
079	C-100.12	179	C-500.02	279		379	C-500.02	479	C-500.02	579	C-500.03	679	C-500.03	779	C-500.03	879	C-500.03	979	C-500.03
080	C-100.12	180	C-500.02	280		380	C-500.02	480	C-500.02	580	C-500.03	680	C-500.03	780	C-500.03	880	C-500.03	980	C-500.03
081	C-100.12	181	C-500.02	281		381	C-500.02	481	C-500.02	581	C-500.03	681	C-500.03	781	C-500.03	881	C-500.03	981	C-500.03
082	C-100.12	182	C-500.02	282		382	C-500.02	482	C-500.02	582	C-500.03	682	C-500.03	782	C-500.03	882	C-500.03	982	C-500.03
083	C-100.12	183	C-500.02	283		383	C-500.02	483	C-500.02	583	C-500.03	683	C-500.03	783	C-500.03	883	C-500.03	983	C-500.03
084	C-100.12	184	C-500.02	284		384	C-500.02	484	C-500.02	584	C-500.03	684	C-500.03	784	C-500.03	884	C-500.03	984	C-500.03
085	C-100.12	185	C-500.02	285		385	C-500.02	485	C-500.02	585	C-500.03	685		785	C-500.03	885	C-500.03	985	C-500.03
086	C-100.12	186	C-500.02	286		386	C-500.02	486	C-500.02	586	C-500.03	686		786	C-500.03	886	C-500.03	986	C-500.03
087	C-100.12	187	C-500.02	287		387	C-500.02	487	C-500.02	587	C-500.03	687		787	C-500.03	887	C-500.03	987	C-500.03
088	C-100.12	188	C-500.02	288		388	C-500.02	488	C-500.02	588	C-500.03	688		788	C-500.03	888	C-500.03	988	C-500.03
089	C-100.12	189	C-500.02	289	C-500.02	389	C-500.02	489	C-500.02	589	C-500.03	689		789	C-500.03	889	C-500.03	989	C-500.03
090	C-100.12	190	C-500.02	290	C-500.02	390	C-500.02	490	C-500.02	590	C-500.03	690		790	C-500.03	890	C-500.03	990	C-500.03
091	C-100.12	191	C-500.02	291	C-500.02	391	C-500.02	491	C-500.02	591	C-500.03	691		791	C-500.03	891	C-500.03	991	C-500.03
092	C-100.12	192	C-500.02	292	C-500.02	392	C-500.02	492	C-500.02	592	C-500.03	692		792	C-500.03	892	C-500.03	992	C-500.03
093	C-100.12	193	C-500.02	293	C-500.02	393	C-500.02	493	C-500.02	593	C-500.03	693		793	C-500.03	893	C-500.03	993	C-500.03
094	C-100.12	194	C-500.02	294	C-500.02	394	C-500.02	494	C-500.02	594	C-500.03	694		794	C-500.03	894	C-500.03	994	C-500.03
095	C-100.12	195	C-500.02	295	C-500.02	395	C-500.02	495	C-500.02	595	C-500.03	695		795	C-500.03	895	C-500.03	995	C-500.03
096	C-100.12	196	C-500.02	296	C-500.02	396	C-500.02	496	C-500.02	596	C-500.03	696	C-500.03	796	C-500.03	896	C-500.03	996	C-500.03
097	C-100.12	197	C-500.02	297	C-500.02	397	C-500.02	497	C-500.02	597	C-500.03	697	C-500.03	797	C-500.03	897	C-500.03	997	C-500.03
098	C-100.12	198	C-500.02	298	C-500.02	398	C-500.02	498	C-500.02	598	C-500.03	698	C-500.03	798	C-500.03	898	C-500.03	998	C-500.03
099	C-100.12	199	C-500.02	299	C-500.02	399	C-500.02	499	C-500.02	599	C-500.03	699	C-500.03	799	C-500.03	899	C-500.03	999	C-500.03

FORD MOTOR COMPANY
STANDARD PARTS

INDEX

THE TWO NUMBERS AT THE TOP OF THE NO. COLUMN ARE THE FIRST DIGITS OF THE FIVE DIGIT NUMBER AND FOLLOWING NUMBERS IN THE COLUMN ARE THE LAST THREE DIGITS OF THE FIVE DIGIT NUMBER.

No.	Page	No.	Page	No.	Page	No.	Page	No.	Page	No.	Page	No.	Page	No.	Page	No.	Page	No.	Page
39		39		39		39		39		39		39		39		39		39	
000	C-500.03	100		200	C-500.12	300	C-500.12	400	C-500.12	500	C-500.13	600	C-500.13	700	C-500.13	800	C-500.13	900	
001	C-500.03	101		201	C-500.12	301	C-500.12	401	C-500.12	501	C-500.13	601	C-500.13	701	C-500.13	801	C-500.13	901	
002	C-500.03	102		202	C-500.12	302	C-500.12	402	C-500.12	502	C-500.13	602	C-500.13	702	C-500.13	802	C-500.13	902	D-132.03
003	C-500.03	103		203	C-500.12	303	C-500.12	403	C-500.12	503	C-500.13	603	C-500.13	703	C-500.13	803	C-500.13	903	D-132.03
004	C-500.12	104		204	C-500.12	304	C-500.12	404	C-500.12	504	C-500.13	604	C-500.13	704	C-500.13	804	C-500.13	904	D-132.03
005	C-500.12	105		205	C-500.12	305	C-500.12	405	C-500.12	505	C-500.13	605	C-500.13	705	C-500.13	805	C-500.13	905	D-132.03
006	C-500.12	106		206	C-500.12	306	C-500.12	406	C-500.12	506	C-500.13	606	C-500.13	706	C-500.13	806	C-500.13	906	D-132.03
007	C-500.12	107		207	C-500.12	307	C-500.12	407	C-500.12	507	C-500.13	607	C-500.13	707	C-500.13	807	C-500.13	907	D-132.03
008	C-500.12	108		208	C-500.12	308	C-500.12	408	C-500.12	508	C-500.13	608	C-500.13	708	C-500.13	808	C-500.13	908	D-132.03
009	C-500.12	109		209	C-500.12	309	C-500.12	409	C-500.12	509	C-500.13	609	C-500.13	709	C-500.13	809	C-500.13	909	D-132.03
010	C-500.12	110		210	C-500.12	310	C-500.12	410	C-500.12	510	C-500.13	610	C-500.13	710	C-500.13	810	C-500.13	910	D-132.03
011	C-500.12	111	C-500.12	211	C-500.12	311	C-500.12	411	C-500.12	511	C-500.13	611	C-500.13	711	C-500.13	811	C-500.13	911	D-132.03
012	C-500.12	112	C-500.12	212	C-500.12	312	C-500.12	412	C-500.12	512	C-500.13	612	C-500.13	712	C-500.13	812	C-500.13	912	D-132.03
013	C-500.12	113	C-500.12	213	C-500.12	313	C-500.12	413	C-500.12	513	C-500.13	613	C-500.13	713	C-500.13	813	C-500.13	913	
014	C-500.12	114	C-500.12	214	C-500.12	314	C-500.12	414	C-500.12	514	C-500.13	614	C-500.13	714	C-500.13	814	C-500.13	914	
015	C-500.12	115	C-500.12	215	C-500.12	315	C-500.12	415	C-500.12	515	C-500.13	615	C-500.13	715	C-500.13	815	C-500.13	915	D-132.03
016	C-500.12	116	C-500.12	216	C-500.12	316	C-500.12	416	C-500.12	516	C-500.13	616	C-500.13	716	C-500.13	816	C-500.13	916	D-132.03
017	C-500.12	117	C-500.12	217	C-500.12	317	C-500.12	417	C-500.12	517	C-500.13	617	C-500.13	717	C-500.13	817	C-500.13	917	D-132.03
018	C-500.12	118	C-500.12	218	C-500.12	318	C-500.12	418	C-500.12	518	C-500.13	618	C-500.13	718	C-500.13	818	C-500.13	918	D-132.03
019		119	C-500.12	219	C-500.12	319	C-500.12	419	C-500.13	519	C-500.13	619	C-500.13	719	C-500.13	819	C-500.13	919	D-132.03
020		120	C-500.12	220	C-500.12	320	C-500.12	420	C-500.13	520	C-500.13	620	C-500.13	720	C-500.13	820	C-500.13	920	D-132.03
021		121	C-500.12	221	C-500.12	321	C-500.12	421	C-500.13	521	C-500.13	621	C-500.13	721	C-500.13	821	C-500.13	921	D-132.03
022		122		222	C-500.12	322	C-500.12	422	C-500.13	522	C-500.13	622	C-500.13	722	C-500.13	822	C-500.13	922	D-132.03
023		123		223	C-500.12	323	C-500.12	423	C-500.13	523	C-500.13	623	C-500.13	723	C-500.13	823	C-500.13	923	D-132.03
024		124		224	C-500.12	324	C-500.12	424	C-500.13	524	C-500.13	624	C-500.13	724	C-500.13	824	C-500.13	924	D-132.03
025		125		225	C-500.12	325	C-500.12	425	C-500.13	525	C-500.13	625	C-500.13	725	C-500.13	825	C-500.13	925	D-132.03
026		126		226	C-500.12	326	C-500.12	426	C-500.13	526	C-500.13	626	C-500.13	726	C-500.13	826	C-500.13	926	
027		127		227	C-500.12	327	C-500.12	427	C-500.13	527	C-500.13	627	C-500.13	727	C-500.13	827	C-500.13	927	
028		128		228	C-500.12	328	C-500.12	428	C-500.13	528	C-500.13	628	C-500.13	728	C-500.13	828	C-500.13	928	D-132.03
029	C-500.12	129		229	C-500.12	329	C-500.12	429	C-500.13	529		629	C-500.13	729	C-500.13	829	C-500.13	929	D-132.03
030	C-500.12	130		230	C-500.12	330	C-500.12	430	C-500.13	530		630	C-500.13	730	C-500.13	830	C-500.13	930	D-132.03
031	C-500.12	131		231	C-500.12	331	C-500.12	431	C-500.13	531		631	C-500.13	731	C-500.13	831	C-500.13	931	D-132.03
032	C-500.12	132		232	C-500.12	332	C-500.12	432	C-500.13	532		632	C-500.13	732	C-500.13	832	C-500.13	932	D-132.03
033	C-500.12	133	C-500.12	233	C-500.12	333	C-500.12	433	C-500.13	533		633	C-500.13	733	C-500.13	833	C-500.13	933	D-132.03
034	C-500.12	134	C-500.12	234	C-500.12	334	C-500.12	434	C-500.13	534		634	C-500.13	734	C-500.13	834	C-500.13	934	D-132.03
035	C-500.12	135	C-500.12	235	C-500.12	335	C-500.12	435	C-500.13	535		635	C-500.13	735	C-500.13	835	C-500.13	935	D-132.03
036	C-500.12	136	C-500.12	236	C-500.12	336	C-500.12	436	C-500.13	536		636	C-500.13	736	C-500.13	836	C-500.13	936	D-132.03
037	C-500.12	137	C-500.12	237	C-500.12	337	C-500.12	437	C-500.13	537		637	C-500.13	737	C-500.13	837	C-500.13	937	D-132.03
038	C-500.12	138	C-500.12	238	C-500.12	338	C-500.12	438	C-500.13	538		638	C-500.13	738	C-500.13	838	C-500.13	938	D-132.03
039	C-500.12	139	C-500.12	239	C-500.12	339	C-500.12	439	C-500.13	539		639	C-500.13	739	C-500.13	839	C-500.13	939	
040	C-500.12	140	C-500.12	240	C-500.12	340	C-500.12	440	C-500.13	540	C-500.13	640	C-500.13	740	C-500.13	840	C-500.13	940	
041	C-500.12	141	C-500.12	241	C-500.12	341	C-500.12	441	C-500.13	541	C-500.13	641	C-500.13	741	C-500.13	841	C-500.13	941	D-132.03
042	C-500.12	142	C-500.12	242	C-500.12	342	C-500.12	442	C-500.13	542	C-500.13	642	C-500.13	742	C-500.13	842	C-500.13	942	D-132.03
043	C-500.12	143	C-500.12	243	C-500.12	343	C-500.12	443	C-500.13	543	C-500.13	643	C-500.13	743	C-500.13	843	C-500.13	943	D-132.03
044	C-500.12	144	C-500.12	244	C-500.12	344	C-500.12	444	C-500.13	544	C-500.13	644	C-500.13	744	C-500.13	844	C-500.13	944	D-132.03
045	C-500.12	145	C-500.12	245	C-500.12	345	C-500.12	445	C-500.13	545	C-500.13	645	C-500.13	745	C-500.13	845	C-500.13	945	D-132.03
046	C-500.12	146	C-500.12	246	C-500.12	346	C-500.12	446	C-500.13	546	C-500.13	646	C-500.13	746	C-500.13	846	C-500.13	946	D-132.03
047	C-500.12	147	C-500.12	247	C-500.12	347	C-500.12	447	C-500.13	547	C-500.13	647	C-500.13	747	C-500.13	847	C-500.13	947	D-132.03
048	C-500.12	148	C-500.12	248	C-500.12	348	C-500.12	448	C-500.13	548	C-500.13	648	C-500.13	748	C-500.13	848		948	D-132.03
049	C-500.12	149	C-500.13	249	C-500.12	349	C-500.12	449	C-500.13	549	C-500.13	649	C-500.13	749	C-500.13	849		949	D-132.03
050	C-500.12	150	C-500.12	250	C-500.12	350	C-500.12	450	C-500.13	550	C-500.13	650	C-500.13	750	C-500.13	850	D-132.03	950	D-132.03
051	C-500.12	151	C-500.12	251	C-500.12	351	C-500.12	451	C-500.13	551		651	C-500.13	751	C-500.13	851	D-132.03	951	D-132.03
052	C-500.12	152	C-500.12	252	C-500.12	352	C-500.12	452	C-500.13	552		652	C-500.13	752	C-500.13	852	D-132.03	952	
053	C-500.12	153	C-500.12	253	C-500.12	353	C-500.12	453	C-500.13	553		653	C-500.13	753	C-500.13	853	D-132.03	953	
054	C-500.12	154	C-500.12	254	C-500.12	354	C-500.12	454	C-500.13	554		654	C-500.13	754	C-500.13	854		954	D-132.03
055	C-500.12	155	C-500.12	255	C-500.12	355	C-500.12	455	C-500.13	555		655	C-500.13	755	C-500.13	855		955	D-132.03
056	C-500.12	156	C-500.12	256	C-500.12	356	C-500.12	456	C-500.13	556		656	C-500.13	756	C-500.13	856		956	D-132.03
057	C-500.12	157	C-500.12	257	C-500.12	357	C-500.12	457	C-500.13	557		657	C-500.13	757	C-500.13	857		957	D-132.03
058	C-500.12	158	C-500.12	258	C-500.12	358	C-500.12	458	C-500.13	558		658	C-500.13	758	C-500.13	858		958	D-132.03
059	C-500.12	159	C-500.12	259	C-500.12	359	C-500.12	459	C-500.13	559		659	C-500.13	759	C-500.13	859		959	D-132.03
060	C-500.12	160	C-500.12	260	C-500.12	360	C-500.12	460	C-500.13	560		660	C-500.13	760	C-500.13	860		960	D-132.03
061	C-500.12	161	C-500.12	261	C-500.12	361	C-500.12	461	C-500.13	561		661	C-500.13	761	C-500.13	861		961	D-132.03
062	C-500.12	162	C-500.12	262	C-500.12	362	C-500.12	462	C-500.13	562	C-500.13	662	C-500.13	762	C-500.13	862		962	D-132.03
063	C-500.12	163	C-500.12	263	C-500.12	363	C-500.12	463	C-500.13	563	C-500.13	663	C-500.13	763	C-500.13	863	D-132.03	963	D-132.03
064	C-500.12	164	C-500.12	264	C-500.12	364	C-500.12	464	C-500.13	564	C-500.13	664	C-500.13	764	C-500.13	864	D-132.03	964	D-132.03
065	C-500.12	165	C-500.12	265	C-500.12	365	C-500.12	465	C-500.13	565	C-500.13	665	C-500.13	765	C-500.13	865	D-132.03	965	
066	C-500.12	166	C-500.12	266	C-500.12	366	C-500.12	466	C-500.13	566	C-500.13	666	C-500.13	766	C-500.13	866	D-132.03	966	
067	C-500.12	167	C-500.12	267	C-500.12	367	C-500.12	467	C-500.13	567	C-500.13	667	C-500.13	767	C-500.13	867	D-132.03	967	D-132.03
068	C-500.12	168	C-500.12	268	C-500.12	368	C-500.12	468	C-500.13	568	C-500.13	668	C-500.13	768	C-500.13	868	D-132.03	968	D-132.03
069	C-500.12	169	C-500.12	269	C-500.12	369	C-500.12	469	C-500.13	569	C-500.13	669	C-500.13	769	C-500.13	879	D-132.03	969	D-132.03
070	C-500.12	170	C-500.12	270	C-500.12	370	C-500.12	470	C-500.13	570	C-500.13	670	C-500.13	770	C-500.13	870	D-132.03	970	D-132.03
071	C-500.12	171	C-500.12	271	C-500.12	371	C-500.12	471	C-500.13	571	C-500.13	671	C-500.13	771	C-500.13	871	D-132.03	971	D-132.03
072	C-500.12	172	C-500.12	272	C-500.12	372	C-500.12	472	C-500.13	572	C-500.13	672	C-500.13	772	C-500.13	872		972	D-132.03
073	C-500.12	173	C-500.12	273	C-500.12	373	C-500.12	473	C-500.13	573	C-500.13	673	C-500.13	773	C-500.13	873		973	D-132.03
074	C-500.12	174	C-500.12	274	C-500.12	374	C-500.12	474	C-500.13	574	C-500.13	674	C-500.13	774	C-500.13	874		974	D-132.03
075	C-500.12	175	C-500.12	275	C-500.12	375	C-500.12	475	C-500.13	575	C-500.13	675	C-500.13	775	C-500.13	875		975	D-132.03
076	C-500.12	176	C-500.12	276	C-500.12	376	C-500.12	476	C-500.13	576	C-500.13	676	C-500.13	776	C-500.13	876	D-132.03	976	D-132.03
077	C-500.12	177	C-500.12	277	C-500.12	377	C-500.12	477	C-500.13	577	C-500.13	677	C-500.13	777	C-500.13	877	D-132.03	977	D-132.03
078	C-500.12	178	C-500.12	278	C-500.12	378	C-500.12	478	C-500.13	578	C-500.13	678	C-500.13	778	C-500.13	878	D-132.03	978	
079	C-500.12	179	C-500.12	279	C-500.12	379	C-500.12	479	C-500.13	579	C-500.13	679	C-500.13	779	C-500.13	879	D-132.03	979	
080	C-500.12	180	C-500.12	280	C-500.12	380	C-500.12	480	C-500.13	580	C-500.13	680	C-500.13	780	C-500.13	880	D-132.03	980	D-131.03
081	C-500.12	181	C-500.12	281	C-500.12	381	C-500.12	481	C-500.13	581	C-500.13	681	C-500.13	781	C-500.13	881	D-132.03	981	D-131.03
082	C-500.12	182	C-500.12	282	C-500.12	382	C-500.12	482	C-500.13	582	C-500.13	682	C-500.13	782	C-500.13	882	D-132.03	982	D-131.03
083	C-500.12	183	C-500.12	283	C-500.12	383	C-500.12	483	C-500.13	583	C-500.13	683	C-500.13	783	C-500.13	883	D-132.03	983	D-131.03
084	C-500.12	184	C-500.12	284	C-500.12	384	C-500.12	484	C-500.13	584	C-500.13	684	C-500.13	784	C-500.13	884	D-132.03	984	
085	C-500.12	185	C-500.12	285	C-500.12	385	C-500.12	485	C-500.13	585	C-500.13	685	C-500.13	785	C-500.13	885	D-132.03	985	
086	C-500.12	186	C-500.12	286	C-500.12	386	C-500.12	486	C-500.13	586	C-500.13	686	C-500.13	786	C-500.13	886	D-132.03	986	
087	C-500.12	187	C-500.12	287	C-500.12	387	C-500.12	487	C-500.13	587	C-500.13	687	C-500.13	787	C-500.13	887		987	
088	C-500.12	188	C-500.12	288	C-500.12	388	C-500.12	488	C-500.13	588	C-500.13	688	C-500.13	788	C-500.13	888		988	
089	C-500.12	189	C-500.12	289	C-500.12	389	C-500.12	489	C-500.13	589	C-500.13	689	C-500.13	789	C-500.13	889	D-132.03	989	
090	C-500.12	190	C-500.12	290	C-500.12	390	C-500.12	490	C-500.13	590	C-500.13	690	C-500.13	790	C-500.13	890	D-132.03	990	
091	C-500.12	191	C-500.12	291	C-500.12	391	C-500.12	491	C-500.13	591	C-500.13	691	C-500.13	791	C-500.13	891	D-132.03	991	
092	C-500.12	192	C-500.12	292	C-500.12	392	C-500.12	492	C-500.13	592	C-500.13	692	C-500.13	792	C-500.13	892	D-132.03	992	
093	C-500.12	193	C-500.12	293	C-500.12	393	C-500.12	493	C-500.13	593	C-500.13	693	C-500.13	793	C-500.13	893	D-132.03	993	D-131.03
094	C-500.12	194	C-500.12	294	C-500.12	394	C-500.12	494	C-500.13	594	C-500.13	694	C-500.13	794	C-500.13	894	D-132.03	994	D-131.03
095	C-500.12	195	C-500.12	295	C-500.12	395	C-500.12	495	C-500.13	595	C-500.13	695	C-500.13	795	C-500.13	895	D-132.03	995	D-131.03
096	C-500.12	196	C-500.12	296	C-500.12	396	C-500.12	496	C-500.13	596	C-500.13	696	C-500.13	796	C-500.13	896	D-132.03	996	D-131.03
097	C-500.12	197	C-500.12	297	C-500.12	397	C-500.12	497	C-500.13	597	C-500.13	697	C-500.13	797	C-500.13	897	D-132.03	997	D-131.03
098	C-500.12	198	C-500.12	298	C-500.12	398	C-500.12	498	C-500.13	598	C-500.13	698	C-500.13	798	C-500.13	898	D-132.03	998	D-131.03
099	C-500.12	199	C-500.12	299	C-500.12	399	C-500.12	499	C-500.13	599	C-500.13	699	C-500.13	799	C-500.13	899	D-132.03	999	D-131.03

FORD MOTOR COMPANY
STANDARD PARTS

INDEX

THE TWO NUMBERS AT THE TOP OF THE NO. COLUMN ARE THE FIRST DIGITS OF THE FIVE DIGIT NUMBER AND FOLLOWING NUMBERS IN THE COLUMN ARE THE LAST THREE DIGITS OF THE FIVE DIGIT NUMBER.

No.	Page	No.	Page	No.	Page	No.	Page	No.	Page	No.	Page	No.	Page	No.	Page	No.	Page	No.	Page
40		40		40		40		40		40		40		40		40		40	
000	D-131.03	100	D-131.03	200		300	D-111.03	400	D-141.03	500	D-151.03	600	D-151.03	700	D-161.03	800	D-121.03	900	
001	D-131.03	101	D-131.03	201	D-130.03	301	D-111.03	401	D-141.03	501	D-151.03	601	D-151.03	701	D-161.03	801	D-121.03	901	
002		102	D-131.03	202	D-130.03	302	D-111.03	402	D-141.03	502	D-151.03	602		702	D-161.03	802	D-121.03	902	
003		103	D-131.03	203	D-130.03	303		403	D-141.03	503	D-151.03	603		703	D-161.03	803	D-121.03	903	D-132.04
004		104	D-131.03	204	D-130.03	304		404	D-141.03	504		604	D-151.03	704	D-161.03	804	D-121.03	904	D-132.04
005		105	D-131.03	205	D-130.03	305	D-111.03	405	D-141.03	505		605	D-151.03	705	D-161.03	805	D-121.03	905	D-132.04
006	D-131.03	106	D-131.03	206	D-130.03	306	D-111.03	406	D-141.03	506		606	D-151.03	706		806	D-121.03	906	D-132.04
007	D-131.03	107	D-131.03	207	D-130.03	307	D-111.03	407		507		607	D-151.03	707		807	D-121.03	907	D-132.04
008	D-131.03	108		208	D-130.03	308	D-111.03	408		508		608	D-151.03	708	D-161.03	808	D-121.03	908	
009	D-131.03	109		209	D-130.03	309	D-111.03	409	D-141.03	509		609	D-151.03	709	D-161.03	809	D-121.03	909	D-132.04
010	D-131.03	110	D-130.03	210	D-130.03	310	D-111.03	410	D-141.03	510		610	D-151.03	710	D-161.03	810		910	D-132.04
011	D-131.03	111	D-130.03	211	D-130.03	311	D-111.03	411	D-141.03	511		611	D-151.03	711	D-161.03	811		911	D-132.04
012	D-131.03	112	D-130.03	212		312	D-111.03	412	D-141.03	512		612	D-151.03	712	D-161.03	812	D-121.03	912	
013	D-131.03	113	D-130.03	213		313	D-111.03	413	D-141.03	513	D-151.03	613	D-151.03	713	D-161.03	813	D-121.03	913	
014	D-131.03	114		214	D-130.03	314	D-111.03	414	D-141.03	514	D-151.03	614	D-151.03	714	D-161.03	814	D-121.03	914	D-132.04
015	D-131.03	115		215	D-130.03	315	D-111.03	415	D-141.03	515	D-151.03	615		715	D-161.03	815	D-121.03	915	
016	D-131.03	116		216	D-130.03	316		416	D-141.03	516	D-151.03	616		716	D-161.03	816	D-121.03	916	D-132.04
017		117		217	D-130.03	317		417	D-141.03	517	D-151.03	617	D-151.03	717	D-161.03	817	D-121.03	917	D-132.04
018		118		218	D-130.03	318	D-111.03	418	D-141.03	518	D-151.03	618	D-151.03	718	D-161.03	818	D-121.03	918	D-132.04
019	D-131.03	119		219	D-130.03	319	D-111.03	419	D-141.03	519	D-151.03	619	D-151.03	719		819	D-121.03	919	D-132.04
020	D-131.03	120		220	D-130.03	320	D-111.03	420		520	D-151.03	620	D-151.03	720		820	D-121.03	920	D-132.04
021	D-131.03	121		221	D-130.03	321	D-111.03	421		521	D-151.03	621	D-151.03	721	D-161.03	821	D-121.03	921	
022	D-131.03	122		222	D-130.03	322	D-111.03	422	D-141.03	522		622	D-151.03	722	D-161.03	822	D-121.03	922	D-132.04
023	D-131.03	123	D-130.03	223	D-130.03	323	D-111.03	423	D-141.03	523		623	D-151.03	723	D-161.03	823		923	D-132.04
024	D-131.03	124	D-130.03	224	D-130.03	324	D-111.03	424	D-141.03	524		624	D-151.03	724	D-161.03	824		924	D-132.04
025	D-131.03	125	D-130.03	225		325	D-111.03	425	D-141.03	525		625	D-151.03	725	D-161.03	825	D-121.03	925	
026	D-131.03	126	D-130.03	226		326	D-111.03	426	D-141.03	526	D-151.03	626	D-151.03	726	D-161.03	826	D-121.03	926	D-132.04
027	D-131.03	127	D-130.03	227	D-130.03	327	D-111.03	427	D-141.03	527	D-151.03	627	D-151.03	727	D-161.03	827	D-121.03	927	D-132.04
028	D-131.03	128	D-130.03	228	D-130.03	328	D-111.03	428	D-141.03	528	D-151.03	628		728	D-161.03	828	D-121.03	928	D-132.04
029	D-131.03	129	D-130.03	229	D-130.03	329		429	D-141.03	529	D-151.03	629		729	D-161.03	829	D-121.03	929	D-132.04
030		130	D-130.03	230	D-130.03	330		430	D-141.03	530	D-151.03	630	D-161.03	730	D-161.03	830	D-121.03	930	D-132.04
031		131	D-130.03	231	D-130.03	331	D-111.03	431	D-141.03	531	D-151.03	631	D-161.03	731	D-161.03	831	D-121.03	931	D-132.04
032	D-131.03	132		232	D-130.03	332	D-111.03	432	D-141.03	532	D-151.03	632	D-161.03	732		832	D-121.03	932	D-132.04
033	D-131.03	133		233	D-130.03	333	D-111.03	433		533	D-151.03	633	D-161.03	733		833	D-121.03	933	D-132.04
034	D-131.03	134		234	D-130.03	334	D-111.03	434		534	D-151.03	634		734	D-161.03	834	D-121.03	934	
035	D-131.03	135		235	D-130.03	335	D-111.03	435	D-141.03	535	D-151.03	635		735	D-161.03	835	D-121.03	935	D-132.04
036	D-131.03	136	D-130.03	236	D-130.03	336	D-111.03	436	D-141.03	536	D-151.03	636		736	D-161.03	836		936	D-132.04
037	D-131.03	137	D-130.03	237	D-130.03	337	D-111.03	437	D-141.03	537		637		737	D-161.03	837		937	D-132.04
038	D-131.03	138	D-130.03	238		338	D-111.03	438	D-141.03	538		638		738	D-161.03	838	D-121.03	938	
039	D-131.03	139	D-130.03	239		339	D-111.03	439	D-141.03	539	D-151.03	639		739	D-161.03	839	D-121.03	939	D-132.04
040	D-131.03	140	D-130.03	240	D-111.03	340	D-111.03	440	D-141.03	540	D-151.03	640		740	D-161.03	840	D-121.03	940	D-132.04
041	D-131.03	141	D-130.03	241	D-111.03	341	D-111.03	441	D-141.03	541	D-151.03	641		741	D-161.03	841	D-121.03	941	D-132.04
042	D-131.03	142	D-130.03	242	D-111.03	342		442	D-141.03	542	D-151.03	642		742	D-161.03	842	D-121.03	942	D-132.04
043		143	D-130.03	243	D-111.03	343		443	D-141.03	543	D-151.03	643	D-161.03	743	D-161.03	843	D-121.03	943	D-132.04
044		144	D-130.03	244		344	D-111.03	444	D-141.03	544	D-151.03	644	D-161.03	744	D-161.03	844	D-121.03	944	D-132.04
045	D-131.03	145	D-130.03	245		345	D-111.03	445	D-141.03	545	D-151.03	645	D-161.03	745		845	D-121.03	945	D-132.04
046	D-131.03	146	D-130.03	246		346	D-111.03	446		546	D-151.03	646	D-161.03	746		846	D-121.02	946	D-132.04
047	D-131.03	147		247		347	D-111.03	447		547	D-151.03	647	D-161.03	747	D-161.03	847	D-121.03	947	
048	D-131.03	148		248		348	D-111.03	448	D-141.03	548	D-151.03	648	D-161.03	748	D-161.03	848	D-121.03	948	D-132.04
049	D-131.03	149	D-130.03	249		349	D-111.03	449	D-141.03	549	D-151.03	649	D-161.03	749	D-161.03	849		949	D-132.04
050	D-131.03	150	D-130.03	250		350	D-111.03	450	D-141.03	550		650	D-161.03	750	D-161.03	850		950	D-132.04
051	D-131.03	151	D-130.03	251		351	D-111.03	451	D-141.03	551		651	D-161.03	751	D-161.03	851	D-121.03	951	
052	D-131.03	152	D-130.03	252		352	D-111.03	452	D-141.03	552	D-151.03	652		752	D-161.03	852	D-121.03	952	D-132.04
053	D-131.03	153	D-130.03	253	D-111.03	353	D-111.03	453	D-141.03	553	D-151.03	653		753	D-161.03	853	D-121.03	953	D-132.04
054	D-131.03	154	D-130.03	254	D-111.03	354	D-111.03	454	D-141.03	554	D-151.03	654		754	D-161.03	854	D-121.03	954	D-132.04
055	D-131.03	155	D-130.03	255	D-111.03	355		455	D-141.03	555	D-151.03	655		755	D-161.03	855	D-121.03	955	D-132.04
056		156	D-130.03	256	D-111.03	356		456	D-141.03	556	D-141.03	656	D-161.03	756	D-161.03	856	D-121.03	956	D-132.04
057		157	D-130.03	257	D-111.03	357	D-111.03	457	D-141.03	557	D-151.03	657	D-161.03	757	D-161.03	857	D-121.03	957	D-132.04
058	D-131.03	158	D-130.03	258	D-111.03	358	D-111.03	458	D-141.03	558	D-151.03	658	D-161.03	758		858	D-121.03	958	D-132.04
059	D-131.03	159	D-130.03	259	D-111.03	359	D-111.03	459		559	D-151.03	659	D-161.03	759		859	D-121.03	959	D-132.04
060	D-131.03	160		260	D-111.03	360	D-111.03	460		560	D-151.03	660	D-161.03	760	D-121.03	860	D-121.03	960	
061	D-131.03	161		261	D-111.03	361	D-111.03	461	D-141.03	561	D-151.03	661	D-161.03	761	D-121.03	861	D-121.03	961	D-132.04
062	D-131.03	162	D-130.03	262		362	D-111.03	462	D-141.03	562	D-151.03	662	D-161.03	762		862		962	D-132.04
063	D-131.03	163	D-130.03	263		363	D-111.03	463	D-141.03	563		663	D-161.03	763		863		963	D-132.04
064	D-131.03	164	D-130.03	264		364	D-111.03	464	D-141.03	564		664	D-161.03	764		864	D-121.03	964	
065	D-131.03	165	D-130.03	265		365	D-111.03	465	D-141.03	565	D-151.03	665	D-161.03	765		865	D-121.03	965	D-132.04
066	D-131.03	166	D-130.03	266	D-111.03	366	D-111.03	466	D-141.03	566	D-151.03	666	D-161.03	766		866	D-121.03	966	D-132.04
067	D-131.03	167	D-130.03	267	D-111.03	367	D-111.03	467	D-141.03	567	D-151.03	667		767		867	D-121.03	967	D-132.04
068	D-131.03	168	D-130.03	268	D-111.03	368		468	D-141.03	568	D-151.03	668		768		868	D-121.03	968	D-132.04
069		169	D-130.03	269	D-111.03	369		469	D-141.03	569	D-151.03	669	D-161.03	769		869	D-121.03	969	D-132.04
070		170	D-130.03	270	D-111.03	370	D-141.03	470	D-141.03	570	D-151.03	670	D-161.03	770		870	D-121.03	970	D-132.04
071	D-131.03	171	D-130.03	271	D-111.03	371	D-141.03	471	D-141.03	571	D-151.03	671	D-161.03	771		871	D-121.03	971	D-132.04
072	D-131.03	172	D-130.03	272	D-111.03	372		472		572	D-151.03	672	D-161.03	772		872	D-121.03	972	D-132.04
073	D-131.03	173		273	D-111.03	373		473		573	D-151.03	673	D-161.03	773	D-121.03	873	D-121.03	973	
074	D-131.03	174		274	D-111.03	374		474	D-141.03	574	D-151.03	674	D-161.03	774	D-121.03	874	D-121.03	974	D-132.04
075	D-131.03	175	D-130.03	275	D-111.03	375		475	D-141.03	575	D-151.03	675	D-161.03	775	D-121.03	875		975	D-132.04
076	D-131.03	176	D-130.03	276	D-111.03	376		476	D-141.03	576		676	D-151.03	776	D-121.03	876		976	D-132.04
077	D-131.03	177	D-130.03	277		377		477	D-141.03	577		677	D-161.03	777	D-121.03	877	D-121.03	977	
078	D-131.03	178	D-130.03	278		378		478	D-141.03	578	D-151.03	678	D-161.03	778	D-121.03	878	D-121.03	978	D-132.04
079	D-131.03	179	D-130.03	279	D-111.03	379		479	D-141.03	579	D-151.03	679	D-161.03	779	D-121.03	879	D-121.03	979	D-132.04
080	D-131.03	180	D-130.03	280	D-111.03	380		480	D-141.03	580	D-151.03	680		780		880	D-121.03	980	D-132.04
081	D-131.03	181	D-130.03	281	D-111.03	381		481	D-141.03	581	D-151.03	681		781		881	D-121.03	981	D-132.04
082		182	D-130.03	282	D-111.03	382		482	D-141.03	582	D-151.03	682	D-161.03	782		882	D-121.03	982	D-132.04
083		183	D-130.03	283	D-111.03	383	D-141.03	483	D-141.03	583	D-151.03	683	D-161.03	783		883	D-121.03	983	D-132.04
084	D-131.03	184	D-130.03	284	D-111.03	384	D-141.03	484	D-141.03	584	D-151.03	684	D-161.03	784		884	D-121.03	984	D-132.04
085	D-131.03	185	D-130.03	285	D-111.03	385	D-141.03	485		585	D-151.03	685	D-161.03	785		885	D-121.03	985	D-132.04
086	D-131.03	186		286	D-111.03	386	D-141.03	486		586	D-151.03	686	D-161.03	786	D-121.03	886	D-121.03	986	
087	D-131.03	187		287	D-111.03	387	D-141.03	487	D-141.03	587	D-151.03	687	D-161.03	787	D-121.03	887	D-121.03	987	D-132.04
088	D-131.03	188	D-130.03	288	D-111.03	388	D-141.03	488	D-141.03	588	D-151.03	688	D-161.03	788	D-121.03	888		988	D-132.04
089	D-131.03	189	D-130.03	289	D-111.03	389	D-141.03	489	D-141.03	589		689	D-161.03	789	D-121.03	889		989	D-132.04
090	D-131.03	190	D-130.03	290		390		490	D-141.03	590		690	D-161.03	790	D-121.03	890	D-132.04	990	
091	D-131.03	191	D-130.03	291		391		491	D-141.03	591	D-151.03	691	D-161.03	791	D-121.03	891	D-132.04	991	D-132.04
092	D-131.03	192	D-130.03	292	D-111.03	392		492	D-141.03	592	D-151.03	692	D-161.03	792	D-121.03	892	D-132.04	992	D-132.04
093	D-131.03	193	D-130.03	293	D-111.03	393		493	D-141.03	593	D-151.03	693		793	D-121.03	893	D-132.04	993	D-132.04
094	D-131.03	194	D-130.03	294	D-111.03	394		494	D-141.03	594	D-151.03	694		794	D-121.03	894		994	D-132.04
095		195	D-130.03	295	D-111.03	395		495	D-141.03	595	D-151.03	695	D-161.03	795	D-121.03	895		995	D-132.04
096		196	D-130.03	296	D-111.03	396	D-141.03	496	D-141.03	596	D-151.03	696	D-161.03	796	D-121.02	896		996	D-132.04
097	D-131.03	197	D-130.03	297	D-111.03	397	D-141.03	497	D-141.03	597	D-151.03	697	D-161.03	797		897		997	D-132.04
098	D-131.03	198	D-130.03	298	D-111.03	398	D-141.03	498		598	D-151.03	698	D-161.03	798		898		998	D-132.04
099	D-131.03	199		299	D-111.03	399	D-141.03	499		599	D-151.03	699	D-161.03	799	D-121.03	899		999	

FORD MOTOR COMPANY
STANDARD PARTS

INDEX

THE TWO NUMBERS AT THE TOP OF THE NO. COLUMN ARE THE FIRST DIGITS OF THE FIVE DIGIT NUMBER AND FOLLOWING NUMBERS IN THE COLUMN ARE THE LAST THREE DIGITS OF THE FIVE DIGIT NUMBER.

No.	Page	No.	Page	No.	Page	No.	Page	No.	Page	No.	Page	No.	Page	No.	Page	No.	Page	No.	Page
41		41		41		41		41		41		41		41		41		41	
000	D-132.04	100	D-131.04	200		300	D-111.04	400	D-111.04	500		600	D-151.04	700	D-161.04	800	D-121.04	900	D-121.04
001	D-132.04	101	D-131.04	201		301	D-111.04	401	D-111.04	501	D-141.04	601	D-151.04	701	D-161.04	801	D-121.04	901	D-121.04
002	D-132.04	102	D-131.04	202	D-130.04	302		402	D-111.04	502	D-141.04	602	D-151.04	702	D-161.04	802		902	
003		103	D-131.04	203	D-130.04	303		403	D-111.04	503	D-141.04	603		703	D-161.04	803		903	
004	D-132.04	104	D-131.04	204	D-130.04	304		404	D-111.04	504	D-141.04	604		704	D-161.04	804		904	D-121.04
005	D-132.04	105	D-131.04	205	D-130.04	305		405	D-111.04	505	D-141.04	605	D-151.04	705	D-161.04	805		905	D-121.04
006	D-132.04	106	D-131.04	206	D-130.04	306	D-111.04	406	D-111.04	506	D-141.04	606	D-151.04	706	D-161.04	806		906	D-121.04
007	D-132.04	107	D-131.04	207	D 130.04	307	D-111.04	407	D-111.04	507	D-141.04	607	D-151.04	707		807		907	D-121.04
008	D-132.04	108	D-131.04	208	D-130.04	308	D-111.04	408		508	D-141.04	608	D-151.04	708		808		908	D-121.04
009	D-132.04	109		209	D-130.04	309	D-111.04	409		509	D-141.04	609	D-151.04	709	D-161.04	809		909	D-121.04
010	D-132.04	110		210	D-130.04	310	D-111.04	410	D-141.04	510	D 141.04	610	D-151.04	710	D-161.04	810		910	D-121.04
011	D-132.04	111	D-131.04	211	D-130.04	311	D-111.04	411	D-141.04	511	D-141.04	611	D-151.04	711	D-161.04	811		911	D-121.04
012		112	D-131.04	212	D-130.04	312	D-111.04	412		512		612	D-151.04	712	D-161.04	812		912	D-121.04
013	D-132.04	113	D 131.04	213		313	D-111.04	413		513		613	D-151.04	713	D-161.04	813	D-121.04	913	D-121.04
014	D-132.04	114	D-131.04	214		314	D-111.04	414		514	D-141.04	614	D-151.04	714	D-161.04	814	D 121.04	914	D-121.04
015	D-132.04	115	D-131.04	215	D-130.04	315	D-111.04	415		515	D-141.04	615	D-151.04	715	D-161.04	815	D-121.04	915	
016		116	D-131.04	216	D-130.04	316	D-111.04	416		516	D 141.04	616		716	D-161.04	816	D-121.04	916	
017	D-132.04	117	D-131.04	217	D 130.04	317		417		517	D-141.04	617		717	D-161.04	817	D-121.04	917	D-121.04
018	D-132.04	118	D-131.04	218	D-130.04	318		418		518	D-141.04	618	D-151.04	718	D-161.04	818	D-121.04	918	D-121.04
019	D-132.04	119	D-131.04	219	D-130.04	319	D-111.04	419		519	D-141.04	619	D-151.04	719	D-161.04	819	D-121.04	919	D-121.04
020	D-131.04	120	D-131.04	220	D-130.04	320	D-111.04	420		520	D-141.04	620	D-151.04	720		820		920	D-121.04
021	D-131.04	121	D-131.04	221	D-130.04	321	D-111.04	421		521	D-141.04	621	D-151.04	721		821		921	D-121.04
022	D-131.04	122		222	D-130.04	322	D-111.04	422		522	D-141.04	622	D-151.04	722	D-161.04	822		922	D-121.04
023	D-131.04	123		223	D-130.04	323	D-111.04	423	D-141.04	523	D-141.04	623	D-151.04	723	D-161.04	823		923	D-121.04
024		124	D-131.04	224	D-130.04	324	D-111.04	424	D-141.04	524	D-141.04	624	D-151.04	724	D-161.04	824		924	D-121.04
025		125	D-131.04	225	D-130.04	325	D-111.04	425	D-141.04	525		625	D-151.04	725	D-161.04	825		925	D-121.04
026		126	D-131.04	226		326	D-111.04	426	D-141.04	526		626	D-151.04	726	D-161.04	826	D-121.04	926	D-121.04
027		127	D-131.04	227		327	D-111.04	427	D-141.04	527	D-141.04	627	D-151.04	727	D-161.04	827	D-121.04	927	D-121.04
028		128	D-131.04	228	D-130.04	328	D-111.04	428	D-141.04	528	D-141.04	628	D-151.04	728	D-161.04	828	D-121.04	928	D-111.01
029		129	D-131.04	229	D-130.04	329	D-111.04	429	D-141.04	529	D-141.04	629		729	D-161.04	829	D-121.04	929	D-111.01
030		130	D-131.04	230	D-130.04	330		430		530	D-141.04	630		730	D-161.04	830	D-121.04	930	D-111.01
031		131	D-131.04	231	D-130.04	331		431		531	D-141.04	631	D-151.04	731	D-161.04	831	D-121.04	931	D-111.01
032		132	D-131.04	232	D-130.04	332	D-111.04	432		532	D-141.04	632	D-151.04	732	D-161.04	832	D-121.04	932	D-111.01
033	D-131.04	133	D-131.04	233	D-130.04	333	D-111.04	433		533	D-141.04	633	D-151.04	733		833	D-121.04	933	
034	D-131.04	134	D-131.04	234	D-130.04	334	D-111.04	434		534	D-141.04	634	D-151.04	734		834	D-121.04	934	
035	D-131.04	135		235	D-130.04	335	D-111.04	435		535	D-141.04	635	D-151.04	735	D-161.04	835	D-121.04	935	D-111.01
036	D-131.04	136		236	D-130.04	336	D-111.04	436	D-141.04	536	D-141.04	636	D-151.04	736	D 161.04	836	D-121.04	936	D-111.01
037	D-131.04	137	D-131.04	237	D-130.04	337	D-111.04	437	D-141.04	537	D-141.04	637	D-151.04	737	D-161.04	837		937	D-111.01
038	D-131.04	138	D-131.04	238	D-130.04	338	D-111.04	438	D-141.04	538		638	D-151.04	738	D 161.04	838		938	D-111.01
039	D-131.04	139	D-131.04	239		339	D-111.04	439	D-141.04	539		639	D-151.04	739	D-161.04	839	D-121.04	939	D-111.01
040	D-131.04	140	D-131.04	240		340	D-111.04	440	D-141.04	540	D-151.04	640	D-151.04	740	D-161.04	840	D-121.04	940	D 111.01
041	D-131.04	141	D-131.04	241	D-130.04	341	D-111.04	441	D-141.04	541	D-151.04	641	D-151.04	741	D-161.04	841	D-121.04	941	D-111.01
042		142	D-131.04	242	D-130.04	342	D-111.04	442	D-141.04	542	D-151.04	642		742	D-161.04	842	D-121.04	942	D-111.01
043		143	D-131.04	243	D-130.04	343		443	D-141.04	543	D-151.04	643		743	D-161.04	843	D-121.04	943	D-111.01
044		144	D-131.04	244	D-130.04	344		444	D-141.04	544		644	D-151.04	744	D-161.04	844	D-121.04	944	D-111.01
045		145	D-131.04	245	D-130.04	345	D-111.04	445	D-141.04	545		645	D-151.04	745	D-161.04	845	D-121.04	945	D-111.01
046	D-131.04	146	D-131.04	246	D-130.04	346	D-111.04	446	D-141.04	546		646	D-151.04	746		846	D-121.04	946	D-111.01
047	D-131.04	147	D-131.04	247	D-130.04	347	D-111.04	447		547		647	D-151.04	747		847	D-121.04	947	D-111.01
048	D-131.04	148		248	D-130.04	348	D-111.04	448		548		648	D-151.04	748	D-161.04	848	D-121.04	948	D-111.01
049	D-131.04	149		249	D-130.04	349	D-111.04	449	D-141.04	549		649	D-151.04	749	D-161.04	849	D-121.04	949	D-111.01
050	D-131.04	150	D-130.04	250	D-130.04	350	D-111.04	450	D-141.04	550		650	D-151.04	750	D-161.04	850		950	D-111.01
051	D-131.04	151	D-130.04	251	D-130.04	351	D-111.04	451	D-141.04	551		651	D-151.04	751	D-161.04	851		951	D-111.01
052	D-131.04	152	D-130.04	252		352	D-111.04	452	D-141.04	552		652	D-151.04	752	D-161.04	852	D-121.04	952	D-111.01
053	D-131.04	153	D-130.04	253		353	D-111.04	453	D-141.04	553	D-151.04	653	D-151.04	753	D-161.04	853	D-121.04	953	D-111.01
054	D-131.04	154		254	D-130.04	354	D-111.04	454	D-141.04	554	D-151.04	654	D-151.04	754	D-161.04	854	D-121.04	954	D-111.01
055	D-131.04	155		255	D-130.04	355	D-111.04	455	D-141.04	555	D-151.04	655		755	D-161.04	855	D-121.04	955	D-111.01
056	D-131.04	156		256	D-130.04	356		456	D-141.04	556	D-151.04	656		756	D-161.04	856	D-121.04	956	D-111.01
057		157		257	D-130.04	357		457	D-141.04	557	D-151.04	657	D-151.04	757	D-161.04	857	D-121.04	957	D-111.01
058		158		258	D-130.04	358	D-111.04	458	D-141.04	558	D-151.04	658	D-151.04	758	D-161.04	858	D-121.04	958	D-111.01
059	D-131.04	159		259	D-130.04	359	D-111.04	459	D-141.04	559	D-151.04	659	D-151.04	759		859	D-121.04	959	D-111.01
060	D-131.04	160		260	D-130.04	360	D-111.04	460		560	D-151.04	660	D-151.04	760		860	D-121.04	960	D-111.01
061	D-131.04	161		261	D-131.04	361	D-111.04	461		561	D 151.04	661	D-151.04	761	D-161.04	861	D-121.04	961	D-111.01
062	D-131.04	162		262	D-130.04	362	D-111.04	462	D-141.04	562		662	D-151.04	762	D-161.04	862	D-121.04	962	D-111.01
063	D-131.04	163	D-130.04	263	D-130.04	363	D-111.04	463	D-141.04	563		663	D-151.04	763	D-161.04	863		963	D-111.01
064	D-131.04	164	D-130.04	264	D-130.04	364	D-111.04	464	D-141.04	564		664	D-151.04	764	D-161.04	864		964	D-111.01
065	D-131.04	165	D-130.04	265		365	D-111.04	465	D-141.04	565		665	D-151.04	765	D-161.04	865	D-121.04	965	D-111.01
066	D-131.04	166	D-130.04	266		366	D-111.04	466	D-141.04	566	D-151.04	666	D-151.04	766	D-161.04	866	D-121.04	966	D-111.01
067	D-131.04	167	D-130.04	267	D-130.04	367	D-111.04	467	D-141.04	567	D-151.04	667	D-151.04	767	D-161.04	867	D-121.04	967	D-111.01
068	D-131.04	168	D-130.04	268	D-130.04	368	D-111.04	468	D-141.04	568	D-151.04	668		768	D-161.04	868	D-121.04	968	D-111.01
069	D-131.04	169	D-130.04	269	D-130.04	369		469	D-141.04	569	D-151.04	669		769	D-161.04	869	D-121.04	969	D-111.01
070		170	D-130.04	270	D-130.04	370		470	D-141.04	570	D-151.04	670	D-161.04	770	D-161.04	870	D-121.04	970	D-111.01
071		171	D-130.04	271	D-130.04	371	D-111.04	471	D-141.04	571	D-111.04	671	D-161.04	771	D-161.04	871	D-121.04	971	D-111.01
072	D-131.04	172		272	D-130.04	372	D-111.04	472	D-141.04	572	D-151.04	672	D-161.04	772		872	D-121.04	972	D-111.01
073	D-131.04	173		273	D-130.04	373	D-111.04	473		573	D-151.04	673	D-161.04	773		873	D-121.04	973	D-111.01
074	D-131.04	174		274	D-130.04	374	D-111.04	474		574	D-151.04	674		774	D-161.04	874	D-121.04	974	D-111.01
075	D-131.04	175		275	D-130.04	375	D 111.04	475	D-141.04	575	D-151.04	675		775	D-161.04	875	D-121.04	975	D-111.01
076	D-131.04	176	D-130.04	276	D-130.04	376	D-111.04	476	D-141.04	576	D-151.04	676		776	D-161.04	876		976	D-111.01
077	D-131.04	177	D-130.04	277	D-130.04	377	D-111.04	477	D-141.04	577		677		777	D-161.04	877		977	D-111.01
078	D-131.04	178	D-130.04	278		378	D-111.04	478	D-141.04	578		678		778	D-161.04	878	D-121.04	978	D-111.01
079	D-131.04	179	D-130.04	279		379	D-111.04	479	D-141.04	579	D-151.04	679		779	D-161.04	879	D 121.04	979	D-111.01
080	D-131.04	180	D-130.04	280	D-111.04	380	D-111.04	480	D-141.04	580	D-151.04	680		780	D-161.04	880	D-121.04	980	D-111.01
081	D-131.04	181	D-130.04	281	D-111.04	381	D-111.04	481	D-141.04	581	D-151.04	681		781	D-161.04	881	D-121.04	981	D-111.01
082	D-131.04	182	D-130.04	282	D-111.04	382		482	D-141.04	582	D-151.04	682		782	D-161.04	882	D-121.04	982	D-111.01
083		183	D-130.04	283	D-111.04	383		483	D-141.04	583	D-151.04	683	D-161.04	783	D-161.04	883	D-121.04	983	D-111.01
084		184	D-130.04	284		384	D-111.04	484	D-141.04	584	D-151.04	684	D-161.04	784	D-161.04	884	D-121.04	984	D-111.01
085	D-131.04	185	D-130.04	285		385	D-111.04	485	D-141.04	585	D-151.04	685	D-161.04	785		885	D-121.04	985	D-111.01
086	D-131.04	186	D-130.04	286		386	D-111.04	486		586	D-151.04	686	D-161.04	786		886	D-121.04	986	D-111.01
087	D-131.04	187		287		387	D-111.04	487		587	D-151.04	687	D-161.04	787	D-161.04	887	D-121.04	987	D-111.01
088	D-131.04	188		288		388	D-111.04	488	D-141.04	588	D-151.04	688	D-161.04	788	D-161.04	888	D-121.04	988	D-130.01
089	D-131.04	189	D-130.04	289		389	D-111.04	489	D-141.04	589	D-151.04	689	D-161.04	789	D-161.04	889		989	D-130.01
090	D-131.04	190	D-130.04	290		390	D-111.04	490	D-141.04	590		690	D-161.04	790	D-161.04	890		990	D-130.01
091	D-131.04	191	D-130.04	291		391	D-111.04	491	D-141.04	591		691	D-161.04	791	D-161.04	891	D-121.04	991	D-130.01
092	D-131.04	192	D-130.04	292		392	D-111.04	492	D-141.04	592	D-151.04	692		792	D-161.04	892	D-121.04	992	D-130.01
093	D-131.04	193	D-130.04	293	D-111.04	393	D-111.04	493	D-141.04	593	D-151.04	693		793	D-161.04	893	D-121.04	993	
094	D-131.04	194	D-130.04	294	D-111.04	394	D-111.04	494	D-141.04	594	D-151.04	694		794	D-161.04	894	D-121.04	994	
095	D-131.04	195	D-130.04	295	D-111.04	395		495	D-141.04	595	D-151.04	695		795	D-161.04	895	D-121.04	995	D-130.01
096		196	D-130.04	296	D-111.04	396		496	D-141.04	596	D-151.04	696	D-161.04	796	D-161.04	896	D-121.04	996	D-130.01
097		197	D-130.04	297	D-111.04	397	D-111.04	497	D-141.04	597	D-151.04	697	D-161.04	797	D-161.04	897	D-121.04	997	D-130.01
098	D-131.04	198	D-130.04	298	D-111.04	398	D-111.04	498	D-141.04	598	D-151.04	698	D-161.04	798		898	D-121.04	998	D-130.01
099	D-131.04	199	D-130.04	299	D-111.04	399	D-111.04	499		599	D-151.04	699	D-161.04	799		899	D-121.04	999	D-130.01

FORD MOTOR COMPANY
STANDARD PARTS

INDEX

THE TWO NUMBERS AT THE TOP OF THE NO. COLUMN ARE THE FIRST DIGITS OF THE FIVE DIGIT NUMBER AND FOLLOWING NUMBERS IN THE COLUMN ARE THE LAST THREE DIGITS OF THE FIVE DIGIT NUMBER.

No.	Page	No.	Page	No.	Page	No.	Page	No.	Page	No.	Page	No.	Page	No.	Page	No.	Page	No.	Page
42		42		42		42		42		42		42		42		42		42	
000	D-130.01	100	D-131.01	200	D-111.02	300	D-131.02	400	D-132.02	500	D-130.02	600	D-132.02	700	C-103.12	800	C-502.15	900	C-602.14
001	D-130.01	101	D-131.01	201	D-111.02	301	D-131.02	401	D-132.02	501	D-130.02	601	D-132.02	701	C-103.12	801	C-502.15	901	C-602.14
002	D-130.01	102	D-131.01	202	D-111.02	302	D-131.02	402	D-132.02	502	D-130.02	602	D-132.02	702	C-103.12	802	C-502.15	902	C-602.14
003	D-130.01	103	D-131.01	203	D-111.02	303	D-131.02	403	D-132.02	503	D-130.02	603	D-132.02	703	C-103.12	803	C-502.15	903	C-501.14
004	D-130.01	104	D-131.01	204	D-111.02	304	D-131.02	404	D-132.02	504	D-130.02	604	D-132.02	704	C-103.12	804	C-502.15	904	C-311.13
005	D-130.01	105	D-131.01	205	D-111.02	305	D-131.02	405	D-132.02	505	D-130.02	605	D-132.02	705	C-103.12	805	C-502.15	905	C-311.13
006	D-130.01	106	D-131.01	206	D-111.02	306	D-131.02	406	D-132.02	506	D-130.02	606	D-132.02	706	C-103.12	806	C-502.15	906	C-311.13
007	D-130.01	107	D-131.01	207	D-111.02	307	D-131.02	407	D-132.02	507	D-130.02	607	D-132.02	707	C-103.12	807	C-502.15	907	C-311.13
008	D-130.01	108	D-132.01	208	D-111.02	308	D-131.02	408	D-111.02	508	D-130.02	608	D-132.02	708	C-103.12	808	C-502.15	908	C-311.13
009	D-130.01	109	D-132.01	209	D-111.02	309	D-131.02	409	D-111.02	509	D-130.02	609	D-132.02	709	C-103.12	809	C-502.15	909	C-602.14
010	D-130.01	110	D-132.01	210	D-111.02	310	D-131.02	410	D-111.02	510	D-130.02	610	D-132.02	710	C-103.12	810	C-502.15	910	B-251.01
011	D-130.01	111	D-132.01	211	D-111.02	311	D-131.02	411	D-111.02	511	D-130.02	611	D-132.02	711	C-103.12	811	C-502.15	911	B-251.01
012	D-130.01	112	D-132.01	212	D-111.02	312	D-131.02	412	D-111.02	512	D-130.02	612	D-132.02	712	C-103.12	812	C-502.15	912	B-251.01
013	D-130.01	113		213	D-111.02	313	D-131.02	413		513	D-130.02	613	D-132.02	713	C-103.12	813	C-502.15	913	B-251.01
014	D-130.01	114		214	D-111.02	314	D-131.02	414		514	D-130.02	614	D-132.02	714	C-103.12	814	C-502.15	914	B-251.01
015	D-130.01	115	D-132.01	215	D-111.02	315	D-131.02	415	D-111.02	515	D-130.02	615	D-132.02	715	C-103.12	815	C-502.15	915	B-251.01
016	D-130.01	116	D-132.01	216	D-111.02	316	D-131.02	416	D-111.02	516	D-130.02	616	D-132.02	716	C-103.12	816	C-502.15	916	B-251.01
017	D-130.01	117	D-132.01	217	D-111.02	317	D-131.02	417	D-111.02	517	D-130.02	617	D-132.02	717	C-311.13	817	C-502.15	917	B-251.01
018	D-130.01	118	D-132.01	218	D-111.02	318	D-131.02	418	D-111.02	518	D-130.02	618	D-132.02	718	C-311.13	818	C-502.15	918	B-251.01
019	D-130.01	119	D-132.01	219	D-111.02	319	D-131.02	419	D-111.02	519	D-120.02	619	D-132.02	719	C-311.13	819	C-502.15	919	B-251.01
020	D-130.01	120	D-132.01	220	D-111.02	320	D-131.02	420	D-111.02	520	D-130.02	620	D-132.02	720	C-312.14	820	C-502.15	920	B-251.01
021	D-130.01	121	D-132.01	221	D-111.02	321	D-131.02	421	D-111.02	521	D-130.02	621	D-132.02	721	C-312.14	821	C-502.15	921	B-251.01
022	D-130.01	122	D-132.01	222	D-111.02	322	D-131.02	422	D-111.02	522	D-130.02	622	D-132.02	722	C-312.14	822	C-502.15	922	B-251.01
023	D-130.01	123	D-132.01	223	D-111.02	323	D-131.02	423	D-111.02	523	D-130.02	623	D-132.02	723	C-312.14	823	C-502.15	923	B-251.01
024	D-130.01	124	D-132.01	224	D-111.02	324	D-131.02	424	D-111.02	524	D-130.02	624	D-132.02	724	C-312.14	824	C-502.15	924	B-251.01
025	D-130.01	125	D-132.01	225	D-111.02	325	D-131.02	425	D-111.02	525	D-130.02	625	D-132.02	725	C-312.14	825	C-502.15	925	B-251.01
026	D-130.01	126	D-132.01	226	D-111.02	326	D-131.02	426	D-111.02	526	D-130.02	626	D-132.02	726	C-312.14	826	C-502.15	926	B-251.01
027	D-130.01	127	D-132.01	227	D-111.02	327	D-131.02	427	D-111.02	527	D-130.02	627	D-132.02	727	C-312.14	827	C-502.15	927	B-251.01
028	D-130.01	128	D-132.01	228	D-130.02	328	D-131.02	428	D-111.02	528	D-131.02	628	D-132.02	728	C-312.14	828	C-502.15	928	B-251.01
029	D-130.01	129	D-132.01	229	D-130.02	329	D-131.02	429	D-111.02	529	D-131.02	629	D-132.02	729	C-312.14	829	C-502.15	929	B-251.01
030	D-130.01	130	D-132.01	230	D-130.02	330	D-131.02	430	D-111.02	530	D-131.02	630	D-132.02	730	C-312.14	830	C-502.15	930	B-251.01
031	D-130.01	131	D-132.01	231	D-130.02	331	D-131.02	431	D-111.02	531	D-131.02	631	D-132.02	731	C-312.14	831	C-502.15	931	B-251.01
032	D-130.01	132	D-132.01	232	D-130.02	332	D-131.02	432	D-111.02	532	D-131.02	632	D-132.02	732	C-312.14	832	C-502.15	932	B-251.01
033	D-130.01	133	D-132.01	233	D-130.02	333	D-131.02	433	D-111.02	533		633	D-132.02	733	C-312.14	833	C-502.15	933	B-251.01
034	D-130.01	134	D-132.01	234	D-130.02	334	D-131.02	434	D-111.02	534		634	D-132.02	734	C-312.14	834	C-502.15	934	B-251.01
035	D-130.01	135	D-132.01	235	D-130.02	335	D-131.02	435	D-111.02	535	D-131.02	635	D-132.02	735	C-312.14	835	C-502.15	935	B-251.01
036	D-130.01	136	D-132.01	236	D-130.02	336	D-131.02	436	D-111.02	536	D-131.02	636	D-132.02	736	C-312.14	836	C-502.15	936	B-251.01
037	D-130.01	137	D-132.01	237	D-130.02	337	D-131.02	437	D-111.02	537	D-131.02	637	D-132.02	737	C-312.14	837	C-502.15	937	B-251.01
038	D-130.01	138	D-132.01	238	D-130.02	338	D-131.02	438	D-111.02	538	D-131.02	638	D-132.02	738	C-312.14	838	C-502.15	938	B-251.01
039	D-130.01	139	D-132.01	239	D-130.02	339	D-131.02	439	D-111.02	539	D-131.02	639	D-132.02	739	C-312.14	839	C-502.15	939	B-251.01
040	D-130.01	140	D-132.01	240	D-130.02	340	D-131.02	440	D-111.02	540	D-131.02	640	D-132.02	740	C-312.14	840	C-502.15	940	B-251.01
041	D-130.01	141	D-132.01	241	D-130.02	341	D-131.02	441	D-111.02	541	D-131.02	641	D-132.02	741	C-312.14	841	C-502.15	941	B-251.01
042	D-130.01	142	D-132.01	242	D-130.02	342	D-131.02	442	D-111.02	542	D-131.02	642	D-132.02	742	C-312.14	842	C-502.15	942	B-251.01
043	D-130.01	143	D-132.01	243	D-130.02	343	D-131.02	443	D-111.02	543	D-131.02	643	D-132.02	743	C-312.14	843	C-502.15	943	B-251.01
044	D-130.01	144	D-132.01	244	D-130.02	344	D-131.02	444	D-111.02	544	D-131.02	644	D-132.02	744	C-312.14	844	C-502.15	944	B-251.01
045	D-130.01	145	D-132.01	245	D-130.02	345	D-131.02	445	D-111.02	545	D-131.02	645	D-132.02	745	C-312.14	845	C-502.15	945	B-251.01
046	D-130.01	146	D-132.01	246	D-130.02	346	D-131.02	446	D-111.02	546	D-131.02	646	D-132.02	746	C-312.14	846	C-311.13	946	B-251.01
047	D-130.01	147	D-132.01	247	D-130.02	347	D-131.02	447	D-111.02	547	D-131.02	647	D-132.02	747	C-312.14	847	C-311.13	947	B-251.01
048	D-131.01	148	D-132.01	248	D-130.02	348	D-132.02	448	D-111.02	548	D-131.02	648	C-602.14	748	C-312.14	848	C-311.13	948	B-251.01
049	D-131.01	149	D-132.01	249	D-130.02	349	D-132.02	449	D-111.02	549	D-131.02	649	C-602.14	749	C-312.14	849	C-312.14	949	B-251.01
050	D-131.01	150	D-132.01	250	D-130.02	350	D-132.02	450	D-111.02	550	D-131.02	650	C-602.14	750	C-312.14	850	C-402.13	950	B-251.01
051	D-131.01	151	D-132.01	251	D-130.02	351	D-132.02	451	D-111.02	551	D-131.02	651	C-602.14	751	C-312.14	851	C-402.13	951	B-251.01
052	D-131.01	152	D 132.01	252	D-130.02	352	D-132.02	452	D-111.02	552	D-131.02	652	C-602.14	752	C-312.14	852	C-402.13	952	B-251.01
053		153	D-132.01	253	D-130.02	353	D-132.02	453	D-111.02	553	D-131.02	653	C-602.14	753	C-312.14	853	C-402.13	953	B-251.01
054		154	D-132.01	254	D-130.02	354	D-132.02	454	D-111.02	554	D-131.02	654	C-602.14	754	C-312.14	854	C-402.13	954	B-251.01
055	D-131.01	155	D-132.01	255	D-130.02	355	D-132.02	455	D-111.02	555	D-131.02	655	C-602.14	755	C-312.14	855	C-402.13	955	B-251.01
056	D-131.01	156	D-132.01	256	D-130.02	356	D-132.02	456	D-111.02	556	D-131.02	656	C-602.14	756	C-312.14	856	C-402.13	956	B-251.01
057	D-131.01	157	D-132.01	257	D-130.02	357	D-132.02	457	D-111.02	557	D-131.02	657	C-602.14	757	C-312.14	857	C-402.13	957	B-251.01
058	D-131.01	158	D-132.01	258	D-130.02	358	D-132.02	458	D-111.02	558	D-131.02	658	C-602.14	758	C-312.14	858	C-402.13	958	B-251.01
059	D-131.01	159	D-132.01	259	D-130.02	359	D-132.02	459	D-111.02	559	D-131.02	659	C-602.14	759	C-312.14	859	C-402.13	959	B-251.01
060	D-131.01	160	D-132.01	260	D-130.02	360	D-132.02	460	D-111.02	560	D-131.02	660	C-103.12	760	C-312.14	860	C-402.13	960	B-251.01
061	D-131.01	161	D-132.01	261	D-130.02	361	D-132.02	461	D-111.02	561	D-131.02	661	C-103.12	761	C-312.14	861	C-402.13	961	B-251.01
062	D-131.01	162	D-132.01	262	D-130.02	362	D-132.02	462	D-111.02	562	D-131.02	662	C-103.12	762	C-312.14	862	C-402.13	962	B-251.01
063	D-131.01	163	D-132.01	263	D-130.02	363	D-132.02	463	D-111.02	563	D-131.02	663	C-103.12	763	C-312.14	863	C-402.13	963	B-251.01
064	D-131.01	164	D-132.01	264	D-130.02	364	D-132.02	464	D-111.02	564	D-131.02	664	C-103.12	764	C-312.14	864	C-402.13	964	B-251.01
065	D-131.01	165	D-132.01	265	D-130.02	365	D-132.02	465	D-111.02	565	D-131.02	665	C-103.12	765	C-312.14	865	C-402.13	965	B-251.01
066	D-131.01	166	D-132.01	266	D-130.02	366	D-132.02	466	D-111.02	566	D-131.02	666	C-103.12	766	C-312.14	866	C-402.13	966	B-251.01
067	D-131.01	167	D-132.01	267	D-130.02	367	D-132.02	467	D-111.02	567	D-131.02	667	C-103.12	767	C-312.14	867	C-402.13	967	B-251.01
068	D-131.01	168	D-111.02	268	D-130.02	368	D-132.02	468	D-130.02	568	D-131.02	668	C-103.12	768	C-312.14	868	C-402.13	968	B-251.01
069	D-131.01	169	D-111.02	269	D-130.02	369	D-132.02	469	D-130.02	569	D-131.02	669	C-103.12	769	C-312.14	879	C-402.13	969	B-251.01
070	D-131.01	170	D-111.02	270	D-130.02	370	D-132.02	470	D-130.02	570	D-131.02	670	C-103.12	770	C-312.14	870	C-402.13	970	B-251.01
071	D-131.01	171	D-111.02	271	D-130.02	371	D-132.02	471	D-130.02	571	D-131.02	671	C-103.12	771	C-312.14	871	C-402.13	971	B-251.01
072	D-131.01	172	D-111.02	272	D-130.02	372	D-132.02	472	D-130.02	572	D-131.02	672	C-103.12	772	C-312.14	872	C-402.13	972	B-251.01
073	D-131.01	173	D-111.02	273	D-130.02	373	D-132.02	473		573	D-131.02	673	C-103.12	773	C-312.14	873	C-402.13	973	B-251.01
074	D-131.01	174	D-111.02	274	D-130.02	374	D-132.02	474		574	D-131.02	674	C-103.12	774	C-312.14	874	C-402.13	974	B-251.01
075	D-131.01	175	D-111.02	275	D-130.02	375	D-132.02	475	D-130.02	575	D-131.02	675	C-103.12	775	C-312.14	875	C-402.13	975	B-251.01
076	D-131.01	176	D-111.02	276	D-130.02	376	D-132.02	476	D-130.02	576	D-131.02	676	C-103.12	776	C-312.14	876	C-402.13	976	B-251.01
077	D-131.01	177	D-111.02	277	D-130.02	377	D-132.02	477	D-130.02	577	D-131.02	677	C-103.12	777	C-312.14	877	C-402.13	977	B-251.01
078	D-131.01	178	D-111.02	278	D-130.02	378	D-132.02	478	D-130.02	578	D-131.02	678	C-103.12	778	C-312.14	878	C-402.13	978	B-251.01
079	D-131.01	179	D-111.02	279	D-130.02	379	D-132.02	479	D-130.02	579	D-131.02	679	C-103.12	779	C-312.14	879	C-402.13	979	B-251.01
080	D-131.01	180	D 111.02	280	D-130.02	380	D-132.02	480	D-130.02	580	D-131.02	680	C-103.12	780	C-312.14	880	C-402.13	980	B-251.01
081	D-131.01	181	D-111.02	281	D-130.02	381	D-132.02	481	D-130.02	581	D-131.02	681	C-103.12	781	C-312.14	881	C-402.13	981	B-251.01
082	D-131.01	182	D-111.02	282	D-130.02	382	D-132.02	482	D-130.02	582	D-131.02	682	C-103.12	782	C-312.14	882	C-402.13	982	B-251.01
083	D-131.01	183	D-111.02	283	D-130.02	383	D-132.02	483	D-130.02	583	D-131.02	683	C-103.12	783	C-312.14	883	C-402.13	983	B-251.01
084	D-131.01	184	D-111.02	284	D-130.02	384	D-132.02	484	D-130.02	584	D-131.02	684	C-103.12	784	C-312.14	884	C-402.13	984	B-251.01
085	D-131.01	185	D-111.02	285	D-130.02	385	D-132.02	485	D-130.02	585	D-131.02	685	C-103.12	785	C-312.14	885	C-402.13	985	B-251.01
086	D-131.01	186	D-111.02	286	D-130.02	386	D-132.02	486	D-130.02	586	D-131.02	686	C-103.12	786	C-312.14	886	C-402.13	986	B-251.D1
087	D-131.01	187	D-111.02	287	D-130.02	387	D-132.02	487	D-130.02	587	D-131.02	687	C-103.12	787	C-312.14	887	C-402.13	987	B-251.01
088	D-131.01	188	D-111.02	288	D-131.02	388	D-132.02	488	D-130.02	588	D-132.02	688	C-103.12	788	C-312.14	888	C-402.13	988	B-251.01
089	D-131.01	189	D-111.02	289	D-131.02	389	D-132.02	489	D-130.02	589	D-132.02	689	C-103.12	789	C-311.13	889	C-402.13	989	B-251.01
090	D-131.01	190	D-111.02	290	D-131.02	390	D-132.02	490	D-130.02	590	D-132.02	690	C-103.12	790	C-502.15	890	C-402.13	990	B-251.01
091	D-131.01	191	D-111.02	291	D-131.02	391	D-132.02	491	D-130.02	591	D-132.02	691	C-103.12	791	C-502.15	891	C-402.13	991	B-251.01
092	D-131.01	192	D-111.02	292	D-131.02	392	D-132.02	492	D-130.02	592	D-132.02	692	C-103.12	792	C-502.15	892	C-402.13	992	B-251.01
093	D-131.01	193	D-111.02	293	D-131.02	393	D-132.02	493	D-130.02	593		693	C-103.12	793	C-502.15	893	C-402.13	993	B-251.01
094	D-131.01	194	D-111.02	294	D-131.02	394	D-132.02	494	D-130.02	594		694	C-103.12	794	C-502.15	894	C-402.13	994	B-251.01
095	D-131.01	195	D-111.02	295	D-131.02	395	D-132.02	495	D-130.02	595	D-132.02	695	C-103.12	795	C-502.15	895	C-402.13	995	B-251.01
096	D-131.01	196	D 111.02	296	D-131.02	396	D-132.02	496	D-130.02	596	D-132.02	696	C-103.12	796	C-502.15	896	C-402.13	996	B-251.01
097	D-131.01	197	D-111.02	297	D-131.02	397	D-132.02	497	D-130.02	597	D-132.02	697	C-103.12	797	C-502.15	897	C-402.13	997	B-251.01
098	D-131.01	198	D-111.02	298	D-131.02	398	D-132.02	498	D-130.02	598	D-132.02	698	C-103.12	798	C-502.15	898	C-402.13	998	B-251.01
099	D-131.01	199	D-111.02	299	D-131.02	399	D-132.02	499	D-130.02	599	D-132.02	699	C-103.12	799	C-502.15	899	C-402.13	999	B-251.01

FORD MOTOR COMPANY
STANDARD PARTS

INDEX

THE TWO NUMBERS AT THE TOP OF THE NO. COLUMN ARE THE FIRST DIGITS OF THE FIVE DIGIT NUMBER AND FOLLOWING NUMBERS IN THE COLUMN ARE THE LAST THREE DIGITS OF THE FIVE DIGIT NUMBER.

No.	Page	No.	Page	No.	Page	No.	Page	No.	Page	No.	Page	No.	Page	No.	Page	No.	Page	No.	Page
43		43		43		43		43		43		43		43		43		43	
000	B-251.01	100	B-251.01	200	B-251.01	300	C-602.14	400	C-101.11	500	C-311.13	600		700		800		900	
001	B-251.01	101	B-251.01	201	B-251.01	301	C-602.14	401	C-101.11	501	C-311.13	601		701		801		901	
002	B-251.01	102	B-251.01	202	B-251.01	302	C-602.14	402	C-101.11	502	C-311.13	602		702		802		902	
003	B-251.01	103	B-251.01	203	B-251.01	303	C-602.14	403	C-101.11	503	C-311.13	603		703		803		903	
004	B-251.01	104	B-251.01	204	B-251.01	304	C-602.14	404	C-101.11	504	C-311.13	604		704		804		904	
005	B-251.01	105	B-251.01	205	B-251.01	305	C-602.14	405	C-101.11	505	C-311.13	605		705		805		905	
006	B-251.01	106	B-251.01	206	B-251.01	306	C-602.14	406	C-101.11	506	C-311.13	606		706		806		906	
007	B-251.01	107	B-251.01	207	B-251.01	307	C-602.14	407	C-101.11	507	C-311.13	607		707		807		907	
008	B-251.01	108	B-251.01	208	B-251.01	308	C-602.14	408	C-101.11	508	C-311.13	608		708		808		908	
009	B-251.01	109	B-251.01	209	B-251.01	309	C-602.14	409	C-101.11	509	C-311.13	609		709		809		909	
010	B-251.01	110	B-251.01	210	B-251.01	310	C-602.14	410	C-101.11	510	C-311.13	610		710		810		910	
011	B-251.01	111	B-251.01	211	B-251.01	311	C-602.14	411	C-101.11	511	C-311.13	611		711		811		911	
012	B-251.01	112	B-251.01	212	B-251.01	312	C-602.14	412	C-101.11	512	C-311.13	612		712		812		912	
013	B-251.01	113	B-251.01	213	B-251.01	313	C-602.14	413	C-101.11	513	C-311.13	613		713		813		913	
014	B-251.01	114	B-251.01	214	B-251.01	314	C-602.14	414	C-101.11	514	C-311.13	614		714		814		914	
015	B-251.01	115	B-251.01	215	B-251.01	315	C-502.15	415	C-101.11	515	C-311.13	615		715		815		915	
016	B-251.01	116	B-251.01	216	B-251.01	316	C-312.14	416	C-101.11	516	C-311.13	616		716		816		916	
017	B-251.01	117	B-251.01	217	B-251.01	317		417	C-101.11	517	C-311.13	617		717		817		917	
018	B-251.01	118	B-251.01	218	B-251.01	318		418	C-101.11	518	C-311.13	618		718		818		918	
019	B-251.01	119	B-251.01	219	B-251.01	319		419	C-101.11	519	C-311.13	619		719		819		919	
020	B-251.01	120	B-251.01	220	B-251.01	320		420	C-101.11	520	C-311.13	620		720		820		920	
021	B-251.01	121	B-251.01	221	B-251.01	321	C-601.13	421	C-101.11	521	C-311.13	621		721		821		921	
022	B-251.01	122	B-251.01	222	B-251.01	322	C-601.13	422	C-101.11	522	C-311.13	622		722		822		922	
023	B-251.01	123	B-251.01	223	B-251.01	323	C-601.13	423	C-101.11	523	C-311.13	623		723		823		923	
024	B-251.01	124	B-251.01	224	B-251.01	324	C-601.13	424	C-101.11	524	C-311.13	624		724		824		924	
025	B-251.01	125	B-251.01	225	B-251.01	325	C-601.13	425	C-101.11	525	C-311.13	625		725		825		925	
026	B-251.01	126	B-251.01	226	C-601.13	326	C-601.13	426		526	C-311.13	626		726		826		926	
027	B-251.01	127	B-251.01	227	C-601.13	327	C-601.13	427		527	C-311.13	627		727		827		927	
028	B-251.01	128	B-251.01	228	C-601.13	328	C-601.13	428	C-501.14	528	C-311.13	628		728		828		928	
029	B-251.01	129	B-251.01	229	C-601.13	329	C-601.13	429	C-501.14	529	C-311.13	629		729		829		929	
030	B-251.01	130	B-251.01	230	C-601.13	330	C-601.13	430	C-501.14	530	C-311.13	630		730		830		930	
031	B-251.01	131	B-251.01	231	C-601.13	331	C-601.13	431	C-501.14	531	C-311.13	631		731		831		931	
032	B-251.01	132	B-251.01	232	C-601.13	332	C-601.13	432	C-501.14	532		632		732		832		932	
033	B-251.01	133	B-251.01	233	C-601.13	333	C-601.13	433	C-501.14	533		633		733		833		933	
034	B-251.01	134	B-251.01	234	C-601.13	334	C-601.13	434	C-501.14	534		634		734		834		934	
035	B-251.01	135	B-251.01	235	C-601.13	335	C-601.13	435	C-501.14	535		635		735		835		935	
036	B-251.01	136	B-251.01	236	C-601.13	336	C-601.13	436	C-501.14	536		636		736		836		936	
037	B-251.01	137	B-251.01	237	C-601.13	337	C-601.13	437	C-501.14	537		637		737		837		937	
038	B-251.01	138	B-251.01	238	C-501.14	338	C-601.13	438	C-501.14	538		638		738		838		938	
039	B-251.01	139	B-251.01	239	C-501.14	339	C-601.13	439	C-501.14	539		639		739		839		939	
040	B-251.01	140	B-251.01	240	C-501.14	340	C-601.13	440	C-501.14	540		640		740		840		940	
041	B-251.01	141	B-251.01	241	C-501.14	341	C-601.13	441	C-501.14	541		641		741		841		941	
042	B-251.01	142	B-251.01	242	C-501.14	342	C-601.13	442	C-501.14	542		642		742		842		942	
043	B-251.01	143	B-251.01	243	C-501.14	343	C-601.13	443	C-501.14	543		643		743		843		943	
044	B-251.01	144	B-251.01	244	C-101.11	344	C-601.13	444	C-501.14	544		644		744		844		944	
045	B-251.01	145	B-251.01	245	C-101.11	345	C-601.13	445	C-501.14	545		645		745		845		945	
046	B-251.01	146	B-251.01	246	C-101.11	346	C-601.13	446	C-501.14	546		646		746		846		946	
047	B-251.01	147	B-251.01	247	C-101.11	347	C-601.13	447	C-501.14	547		647		747		847		947	
048	B-251.01	148	B-251.01	248	C-101.11	348	C-601.13	448	C-501.14	548		648		748		848		948	
049	B-251.01	149	B-251.01	249	C-101.11	349	C-601.13	449	C-501.14	549		649		749		849		949	
050	B-251.01	150	B-251.01	250	C-101.11	350	C-601.13	450	C-501.14	550		650		750		850		950	
051	B-251.01	151	B-251.01	251	C-101.11	351	C-601.13	451	C-501.14	551		651		751		851		951	
052	B-251.01	152	B-251.01	252	C-101.11	352	C-601.13	452	C-501.14	552		652		752		852		952	
053	B-251.01	153	B-251.01	253	C-101.11	353	C-601.13	453	C-501.14	553		653		753		853		953	
054	B-251.01	154	B-251.01	254	C-101.11	354	C-601.13	454	C-501.14	554		654		754		854		954	
055	B-251.01	155	B-251.01	255	C-101.11	355	C-601.13	455	C-501.14	555		655		755		855		955	
056	B-251.01	156	B-251.01	256	C-101.11	356	C-601.13	456	C-501.14	556		656		756		856		956	
057	B-251.01	157	B-251.01	257	C-101.11	357	C-601.13	457	C-501.14	557		657		757		857		957	
058	B-251.01	158	B-251.01	258	C-103.12	358	C-601.13	458	C-501.14	558		658		758		858		958	
059	B-251.01	159	B-251.01	259	C 601.13	359	C-601.13	459	C-501.14	559		659		759		859		959	
060	B-251.01	160	B-251.01	260	C-311.13	360	C-601.13	460	C-501.14	560		660		760		860		960	
061	B-251.01	161	B-251.01	261	C-311.13	361		461	C-501.14	561		661		761		861		961	
062	B-251.01	162	B-251.01	262	C-101.11	362		462	C-501.14	562		662		762		862		962	
063	B-251.01	163	B-251.01	263	C-311.13	363		463	C-501.14	563		663		763		863		963	
064	B-251.01	164	B-251.01	264	C-311.13	364	C-101.11	464	C-501.14	564		664		764		864		964	
065	B-251.01	165	B-251.01	265	C-311.13	365	C-101.11	465	C-501.14	565		665		765		865		965	
066	B-251.01	166	B-251.01	266	C-601.13	366	C-101.11	466	C-501.14	566		666		766		866		966	
067	B-251.01	167	B-251.01	267		367	C-103.12	467	C-501.14	567		667		767		867		967	
068	B-251.01	168	B-251.01	268		368	C-101.11	468	C-501.14	568		668		768		868		968	
069	B-251.01	169	B-251.01	269		369	C-501.14	469	C-501.14	569		669		769		879		969	
070	B-251.01	170	B-251.01	270	C-602.14	370	C-501.14	470	C-501.14	570		670		770		870		970	
071	B-251.01	171	B-251.01	271	C-602.14	371	C-501.14	471	C-501.14	571		671		771		871		971	
072	B-251.01	172	B-251.01	272	C-602.14	372	C-311.13	472	C-501.14	572		672		772		872		972	
073	B-251.01	173	B-251.01	273	C-602.14	373	C-501.14	473	C-501.14	573		673		773		873		973	
074	B-251.01	174	B-251.01	274	C-602.14	374	C-311.13	474	C-501.14	574		674		774		874		974	
075	B-251.01	175	B-251.01	275	C-602.14	375	C-311.13	475	C-501.14	575		675		775		875		975	
076	B-251.01	176	B-251.01	276	C-602.14	376	C-501.14	476	C-501.14	576		676		776		876		976	
077	B-251.01	177	B-251.01	277	C-602.14	377	C-501.14	477	C-501.14	577		677		777		877		977	
078	B-251.01	178	B-251.01	278	C-602.14	378	C-501.14	478	C-501.14	578		678		778		878		978	
079	B-251.01	179	B-251.01	279	C-602.14	379	C-602.14	479	C-501.14	579		679		779		879		979	
080	B-251.01	180	B-251.01	280	C-602.14	380	C-601.13	480		580		680		780		880		980	
081	B-251.01	181	B-251.01	281	C-602.14	381		481	C-311.13	581		681		781		881		981	
082	B-251.01	182	B-251.01	282	C-602.14	382		482	C-311.13	582		682		782		882		982	
083	B-251.01	183	B-251.01	283	C-602.14	383	C-101.11	483	C-311.13	583		683		783		883		983	
084	B-251.01	184	B-251.01	284	C-602.14	384	C-101.11	484	C-311.13	584		684		784		884		984	
085	B-251.01	185	B-251.01	285	C-602.14	385	C-101.11	485	C-311.13	585		685		785		885		985	
086	B-251.01	186	B-251.01	286	C-602.14	386	C-101.11	486	C-311.13	586		686		786		886		986	
087	B-251.01	187	B-251.01	287	C-602.14	387	C-101.11	487	C-311.13	587		687		787		887		987	
088	B-251.01	188	B-251.01	288	C-602.14	388	C-101.11	488	C-311.13	588		688		788		888		988	
089	B-251.01	189	B-251.01	289	C-602.14	389	C-101.11	489	C-311.13	589		689		789		889		989	
090	B-251.01	190	B-251.01	290	C-602.14	390	C-101.11	490	C-311.13	590		690		790		890		990	
091	B-251.01	191	B-251.01	291	C-602.14	391	C-101.11	491	C-311.13	591		691		791		891		991	
092	B-251.01	192	B-251.01	292	C-602.14	392	C-101.11	492	C-311.13	592		692		792		892		992	
093	B-251.01	193	B-251.01	293	C-602.14	393	C-101.11	493	C-311.13	593		693		793		893		993	
094	B-251.01	194	B-251.01	294	C-602.14	394	C-101.11	494	C-311.13	594		694		794		894		994	
095	B-251.01	195	B-251.01	295	C-602.14	395	C-101.11	495	C-311.13	595		695		795		895		995	
096	B-251.01	196	B-251.01	296	C-602.14	396	C-101.11	496	C-311.13	596		696		796		896		996	
097	B-251.01	197	B-251.01	297	C-602.14	397	C-101.11	497	C-311.13	597		697		797		897		997	
098	B-251.01	198	B-251.01	298	C-602.14	398	C-101.11	498	C-311.13	598		698		798		898		998	
099	B-251.01	199	B-251.01	299	C-602.14	399	C-101.11	499	C-311.13	599		699		799		899		999	

FORD MOTOR COMPANY
STANDARD PARTS

INDEX

THE TWO NUMBERS AT THE TOP OF THE NO. COLUMN ARE THE FIRST DIGITS OF THE FIVE DIGIT NUMBER AND FOLLOWING NUMBERS IN THE COLUMN ARE THE LAST THREE DIGITS OF THE FIVE DIGIT NUMBER.

No.	Page	No.	Page	No.	Page	No.	Page	No.	Page	No.	Page	No.	Page	No.	Page	No.	Page	No.	Page
44		44		44		44		44		44		44		44		44		44	
000		100		200		300		400		500		600		700		800		900	
001		101		201		301		401		501		601		701	F-100.01	801	F-100.01	901	
002		102		202		302		402		502		602		702	F-100.01	802	F-100.01	902	
003		103		203		303		403		503		603		703	F-100.01	803	F-100.01	903	
004		104		204		304		404		504		604		704	F-100.01	804	F-100.01	904	
005		105		205		305		405		505		605		705	F-100.01	805	F-100.01	905	
006		106		206		306		406		506		606		706	F-100.01	806	F-100.01	906	
007		107		207		307		407		507		607		707	F-100.01	807	F-100.01	907	
008		108		208		308		408		508		608		708	F-100.01	808	F-100.01	908	
009		109		209		309		409		509		609		709	F-100.01	809	F-100.01	909	
010		110		210		310		410		510		610		710	F-100.01	810	F-100.01	910	
011		111		211		311		411		511		611		711	F-100.01	811	F-100.01	911	
012		112		212		312		412		512		612		712	F-100.01	812	F-100.01	912	
013		113		213		313		413		513		613		713	F-100.01	813	F-100.01	913	
014		114		214		314		414		514		614		714	F-100.01	814	F-100.01	914	
015		115		215		315		415		515		615		715	F-100.01	815	F-100.01	915	
016		116		216		316		416		516		616		716	F-100.01	816	F-100.01	916	
017		117		217		317		417		517		617		717	F-100.01	817	F-100.01	917	
018		118		218		318		418		518		618		718	F-100.01	818	F-100.01	918	
019		119		219		319		419		519		619		719	F-100.01	819	F-100.01	919	
020		120		220		320		420		520		620		720	F-100.01	820	F-100.01	920	
021		121		221		321		421		521		621		721	F-100.01	821	F-100.01	921	
022		122		222		322		422		522		622		722	F-100.01	822	F-100.01	922	
023		123		223		323		423		523		623		723	F-100.01	823	F-100.01	923	
024		124		224		324		424		524		624		724	F-100.01	824	F-100.01	924	
025		125		225		325		425		525		625		725	F-100.01	825	F-100.01	925	
026		126		226		326		426		526		626		726	F-100.01	826	F-100.01	926	
027		127		227		327		427		527		627		727	F-100.01	827	F-100.01	927	
028		128		228		328		428		528		628		728	F-100.01	828	F-100.01	928	
029		129		229		329		429		529		629		729	F-100.01	829	F-100.01	929	
030		130		230		330		430		530		630		730	F-100.01	830	F-100.01	930	
031		131		231		331		431		531		631		731	F-100.01	831	F-100.01	931	
032		132		232		332		432		532		632		732	F-100.01	832	F-100.01	932	
033		133		233		333		433		533		633		733	F-100.01	833	F-100.01	933	
034		134		234		334		434		534		634		734	F-100.01	834	F-100.01	934	
035		135		235		335		435		535		635		735	F-100.01	835	F-100.01	935	
036		136		236		336		436		536		636		736	F-100.01	836	F-100.01	936	
037		137		237		337		437		537		637		737	F-100.01	837	F-100.01	937	
038		138		238		338		438		538		638		738	F-100.01	838	F-100.01	938	
039		139		239		339		439		539		639		739	F-100.01	839	F-100.01	939	
040		140		240		340		440		540		640		740	F-100.01	840	F-100.01	940	
041		141		241		341		441		541		641		741	F-100.01	841	F-100.01	941	
042		142		242		342		442		542		642		742	F-100.01	842	F-100.01	942	
043		143		243		343		443		543		643		743	F-100.01	843	F-100.01	943	
044		144		244		344		444		544		644		744	F-100.01	844	F-100.01	944	
045		145		245		345		445		545		645		745	F-100.01	845	F-100.01	945	
046		146		246		346		446		546		646		746	F-100.01	846	F-100.01	946	
047		147		247		347		447		547		647		747	F-100.01	847	F-100.01	947	
048		148		248		348		448		548		648		748	F-100.01	848	F-100.01	948	
049		149		249		349		449		549		649		749	F-100.01	849	F-100.01	949	
050		150		250		350		450		550		650		750	F-100.01	850	F-100.01	950	
051		151		251		351		451		551		651		751	F-100.01	851	F-100.01	951	
052		152		252		352		452		552		652		752	F-100.01	852	F-100.01	952	
053		153		253		353		453		553		653		753	F-100.01	853	F-100.01	953	
054		154		254		354		454		554		654		754	F-100.01	854	F-100.01	954	
055		155		255		355		455		555		655		755	F-100.01	855	F-100.01	955	
056		156		256		356		456		556		656		756	F-100.01	856	F-100.01	956	
057		157		257		357		457		557		657		757	F-100.01	857	F-100.01	957	
058		158		258		358		458		558		658		758	F-100.01	858	F-100.01	958	
059		159		259		359		459		559		659		759	F-100.01	859	F-100.01	959	
060		160		260		360		460		560		660		760	F-100.01	860	F-100.01	960	
061		161		261		361		461		561		661		761	F-100.01	861	F-100.01	961	
062		162		262		362		462		562		662		762	F-100.01	862	F-100.01	962	
063		163		263		363		463		563		663		763	F-100.01	863	F-100.01	963	
064		164		264		364		464		564		664		764	F-100.01	864	F-100.01	964	
065		165		265		365		465		565		665		765	F-100.01	865	F-100.01	965	
066		166		266		366		466		566		666		766	F-100.01	866	F-100.01	966	
067		167		267		367		467		567		667		767	F-100.01	867	F-100.01	967	
068		168		268		368		468		568		668		768	F-100.01	868	F-100.01	968	
069		169		269		369		469		569		669		769	F-100.01	869	F-100.01	969	
070		170		270		370		470		570		670		770	F-100.01	870	F-100.01	970	
071		171		271		371		471		571		671		771	F-100.01	871	F-100.01	971	
072		172		272		372		472		572		672		772	F-100.01	872	F-100.01	972	
073		173		273		373		473		573		673		773	F-100.01	873	F-100.01	973	
074		174		274		374		474		574		674		774	F-100.01	874	F-100.01	974	
075		175		275		375		475		575		675		775	F-100.01	875	F-100.01	975	
076		176		276		376		476		576		676		776	F-100.01	876	F-100.01	976	
077		177		277		377		477		577		677		777		877		977	
078		178		278		378		478		578		678		778		878		978	
079		179		279		379		479		579		679		779		879		979	
080		180		280		380		480		580		680		780		880		980	
081		181		281		381		481		581		681		781		881		981	
082		182		282		382		482		582		682		782		882		982	
083		183		283		383		483		583		683		783		883		983	
084		184		284		384		484		584		684		784		884		984	
085		185		285		385		485		585		685		785		885		985	
086		186		286		386		486		586		686		786		886		986	
087		187		287		387		487		587		687		787		887		987	
088		188		288		388		488		588		688		788		888		988	
089		189		289		389		489		589		689		789		889		989	
090		190		290		390		490		590		690		790		890		990	
091		191		291		391		491		591		691		791		891		991	
092		192		292		392		492		592		692		792		892		992	
093		193		293		393		493		593		693		793		893		993	
094		194		294		394		494		594		694		794		894		994	
095		195		295		395		495		595		695		795		895		995	
096		196		296		396		496		596		696		796		896		996	
097		197		297		397		497		597		697		797		897		997	
098		198		298		398		498		598		698		798		898		998	
099		199		299		399		499		599		699		799		899		999	

FORD MOTOR COMPANY
STANDARD PARTS

INDEX

THE TWO NUMBERS AT THE TOP OF THE NO. COLUMN ARE THE FIRST DIGITS OF THE FIVE DIGIT NUMBER AND FOLLOWING NUMBERS IN THE COLUMN ARE THE LAST THREE DIGITS OF THE FIVE DIGIT NUMBER.

No.	Page	No.	Page	No.	Page	No.	Page	No.	Page	No.	Page	No.	Page	No.	Page	No.	Page	No.	Page
45		45		45		45		45		45		45		45		45		45	
000	E-510.01	100	E-510.04	200	E-610.01	300	E-130.01	400		500	B-201.01	600	B-201.02	700	B-201.03	800	B-201.03	900	B-201.04
001	E-510.01	101	E-510.04	201	E-610.01	301	E-130.02	401		501	B-201.01	601	B-201.02	701	B-201.03	801	B-201.03	901	B-201.04
002	E-510.01	102	E-510.04	202	E-610.01	302	E-130.02	402		502	B-201.01	602	B-201.02	702	B-201.03	802	B-201.03	902	B-201.04
003	E-510.01	103	E-510.04	203	E-610.01	303	E-130.02	403		503	B-201.01	603	B-201.02	703	B-201.03	803	B-201.03	903	B-201.04
004	E-510.01	104	E-510.04	204	E-610.01	304	E-130.02	404		504	B-201.01	604	B-201.02	704	B-201.03	804	B-201.03	904	B-201.04
005	E-510.01	105	E-510.04	205	E-610.01	305	E-130.02	405		505	B-201.01	605	B-201.02	705	B-201.03	805	B-201.03	905	B-201.04
006	E-510.01	106	E-510.04	206	E-610.01	306	E-130.02	406		506	B-201.01	606	B-201.02	706	B-201.03	806	B-201.03	906	B-201.04
007	E-510.01	107	E-510.04	207	E-610.01	307	E-130.02	407		507	B-201.01	607	B-201.02	707	B-201.03	807	B-201.03	907	B-201.04
008	E-510.01	108	E-510.04	208	E-610.01	308	E-130.02	408		508	B-201.01	608	B-201.02	708	B-201.03	808	B-201.03	908	B-201.04
009	E-510.01	109	E-510.04	209	E-610.01	309	E-130.02	409		509	B-201.01	609	B-201.02	709	B-201.03	809	B-201.03	909	B-201.04
010	E-510.01	110	E-510.04	210	E-610.01	310	E-130.02	410		510	B-201.01	610	B-201.02	710	B-201.03	810	B-201.03	910	B-201.04
011	E-510.01	111	E-510.04	211	E-610.01	311	E-130.02	411		511	B-201.01	611	B-201.02	711	B-201.03	811	B-201.03	911	B-201.04
012	E-510.01	112	E-510.05	212	E-610.01	312	E-130.02	412		512	B-201.01	612	B-201.02	712	B-201.03	812	B-201.03	912	B-201.04
013	E-510.01	113	E-510.05	213	E-610.01	313	E-130.05	413		513	B-201.01	613	B-201.02	713	B-201.03	813	B-201.03	913	B-201.04
014	E-510.01	114	E-510.05	214	E-610.01	314	E-130.05	414		514	B-201.01	614	B-201.02	714	B-201.03	814	B-201.03	914	B-201.04
015	E-510.01	115	E-510.05	215	E-610.01	315	E-130.05	415		515	B-201.01	615	B-201.02	715	B-201.03	815	B-201.03	915	B-201.04
016	E-510.01	116	E-510.05	216	E-610.01	316	E-130.05	416		516	B-201.01	616	B-201.02	716	B-201.03	816	B-201.03	916	B-201.04
017	E-510.01	117	E-510.05	217	E-610.01	317	E-130.05	417		517	B-201.01	617	B-201.02	717	B-201.03	817	B-201.03	917	B-201.04
018	E-510.01	118	E-510.05	218	E-610.01	318	E-130.05	418		518	B-201.01	618	B-201.02	718	B-201.03	818	B-201.03	918	B-201.04
019	E-510.01	119	E-510.05	219	E-610.01	319	E-130.05	419		519	B-201.01	619	B-201.02	719	B-201.03	819	B-201.03	919	
020	E-510.01	120	E-510.05	220	E-610.01	320		420		520	B-201.01	620	B-201.02	720	B-201.03	820	B-201.03	920	B-251.02
021	E-510.01	121	E-510.05	221	E-610.01	321		421		521	B-201.01	621	B-201.02	721	B-201.03	821	B-201.03	921	B-251.02
022	E-510.01	122	E-510.05	222	E-610.01	322		422		522	B-201.01	622	B-201.02	722	B-201.03	822	B-201.03	922	B-251.02
023	E-510.01	123	E-510.05	223	E-610.01	323		423		523	B-201.01	623	B-201.02	723	B-201.03	823	B-201.03	923	B-251.02
024	E-510.02	124	E-510.05	224	E-610.01	324		424		524	B-201.01	624	B-201.02	724	B-201.03	824	B-201.03	924	B-251.02
025	E-510.02	125	E-510.05	225	E-610.01	325		425		525	B-201.01	625	B-201.02	725	B-201.03	825	B-201.03	925	B-251.02
026	E-510.02	126	E-510.05	226	E-610.02	326		426		526	B-201.01	626	B-201.02	726	B-201.03	826	B-201.03	926	B-251.02
027	E-510.02	127	E-510.05	227	E-610.02	327		427		527	B-201.01	627	B-201.02	727	B-201.03	827	B-201.03	927	B-251.02
028	E-510.02	128	E-510.05	228	E-610.02	328		428		528	B-201.01	628	B-201.02	728	B-201.03	828	B-201.03	928	B-251.02
029	E-510.02	129	E-510.05	229	E-610.02	329		429		529	B-201.01	629	B-201.02	729	B-201.03	829	B-201.03	929	B-251.02
030	E-510.02	130	E-510.05	230	E-610.02	330		430		530	B-201.01	630	B-201.02	730	B-201.03	830	B-201.03	930	B-251.02
031	E-510.02	131	E-510.05	231	E-610.02	331		431		531	B-201.01	631	B-201.02	731	B-201.03	831	B-201.03	931	B-251.02
032	E-510.02	132	E-510.05	232	E-610.02	332		432		532	B-201.01	632	B-201.02	732	B-201.03	832	B-201.03	932	B-251.02
033	E-510.02	133	E-510.05	233	E-610.02	333		433		533	B-201.01	633	B-201.02	733	B-201.03	833	B-201.03	933	B-251.02
034	E-510.02	134	E-510.05	234	E-610.02	334		434		534	B-201.01	634	B-201.02	734	B-201.03	834	B-201.03	934	B-251.02
035	E-510.02	135	E-510.05	235	E-610.02	335		435		535	B-201.01	635	B-201.02	735	B-201.03	835	B-201.03	935	B-251.02
036	E-510.02	136	E-510.05	236	E-610.02	336		436		536	B-201.01	636	B-201.02	736	B-201.03	836	B-201.03	936	B-251.02
037	E-510.02	137	E-510.05	237	E-610.02	337		437		537	B-201.01	637	B-201.02	737	B-201.03	837	B-201.03	937	B-251.02
038	E-510.02	138	E-510.05	238	E-610.02	338		438		538	B-201.01	638	B-201.02	738	B-201.03	838	B-201.03	938	B-251.02
039	E-510.02	139	E-510.05	239	E-610.02	339		439		539	B-201.01	639	B-201.02	739	B-201.03	839	B-201.03	939	B-251.02
040	E-510.02	140	E-510.05	240	E-610.02	340		440		540	B-201.01	640	B-201.02	740	B-201.03	840	B-201.03	940	B-251.02
041	E-510.02	141	E-510.05	241	E-610.02	341		441		541	B-201.01	641	B-201.02	741	B-201.03	841	B-201.03	941	B-251.02
042	E-510.02	142	E-510.05	242	E-610.02	342		442		542	B-201.01	642	B-201.02	742	B-201.03	842	B-201.03	942	B-251.02
043	E-510.02	143	E-510.05	243	E-610.02	343		443		543	B-201.01	643	B-201.02	743	B-201.03	843	B-201.03	943	B-251.02
044	E-510.02	144	E-510.05	244	E-610.02	344		444		544	B-201.01	644	B-201.02	744	B-201.03	844	B-201.03	944	B-251.02
045	E-510.02	145	E-510.05	245	E-610.02	345		445		545	B-201.01	645	B-201.02	745	B-201.03	845	B-201.03	945	B-251.02
046	E-510.02	146	E-510.05	246	E-610.02	346		446		546	B-201.01	646	B-201.02	746	B-201.03	846	B-201.03	946	B-251.02
047	E-510.02	147	E-510.05	247	E-610.02	347		447		547	B-201.01	647	B-201.02	747	B-201.03	847	B-201.04	947	B-251.02
048	E-510.02	148	E-510.05	248	E-610.01	348		448		548	B-201.01	648	B-201.02	748	B-201.03	848	B-201.04	948	B-251.02
049	E-510.02	149	E-510.05	249	E-610.02	349		449		549	B-201.01	649	B-201.02	749	B-201.03	849	B-201.04	949	B-251.02
050	E-510.02	150	E-510.05	250	E-610.02	350		450		550	B-201.01	650		750	B-201.03	850	B-201.04	950	B-251.02
051	E-510.02	151	E-510.05	251	E-610.02	351		451		551	B-201.01	651		751	B-201.03	851	B-201.04	951	B-251.02
052	E-510.02	152	E-510.05	252	E-610.02	352		452		552	B-201.01	652		752	B-201.03	852	B-201.04	952	B-251.02
053	E-510.02	153	E-510.05	253	E-610.02	353		453		553	B-201.01	653		753	B-201.03	853	B-201.04	953	B-251.02
054	E-510.02	154	E-510.05	254	E-610.02	354		454		554	B-201.01	654		754	B-201.03	854	B-201.04	954	B-251.02
055	E-510.02	155	E-510.05	255	E-610.02	355		455		555	B-201.01	655		755	B-201.03	855	B-201.04	955	B-251.02
056	E-510.02	156	E-510.06	256		356		456		556	B-201.01	656		756	B-201.03	856	B-201.04	956	B-251.02
057	E-510.02	157	E-510.06	257		357		457		557	B-201.01	657		757	B-201.03	857	B-201.04	957	B-251.02
058	E-510.02	158	E-510.06	258		358		458		558	B-201.01	658		758	B-201.03	858	B-201.04	958	B-251.02
059	E-510.02	159	E-510.06	259		359		459		559	B-201.01	659		759	B-201.03	859	B-201.04	959	B-251.02
060	E-510.03	160	E-510.06	260		360		460		560	B-201.01	660		760	B-201.03	860	B-201.04	960	B-251.02
061	E-510.03	161	E-510.06	261		361		461		561	B-201.01	661		761	B-201.03	861	B-201.04	961	B-251.02
062	E-510.03	162	E-510.06	262		362		462		562	B-201.01	662		762	B-201.03	862	B-201.04	962	B-251.02
063	E-510.03	163	E-510.06	263		363		463		563	B-201.01	663		763	B-201.03	863	B-201.04	963	B-251.02
064	E-510.03	164	E-510.06	264		364		464		564	B-201.01	664		764	B-201.03	864	B-201.04	964	B-251.02
065	E-510.03	165	E-510.06	265		365		465		565	B-201.01	665		765	B-201.03	865	B-201.04	965	B-251.02
066	E-510.03	166	E-510.06	266		366		466		566	B-201.01	666		766	B-201.03	866	B-201.04	966	B-251.02
067	E-510.03	167	E-510.06	267		367		467		567	B-201.01	667		767	B-201.03	867	B-201.04	967	B-251.02
068	E-510.03	168	E-510.06	268		368		468		568	B-201.01	668		768	B-201.03	868	B-201.04	968	B-251.02
069	E-510.03	169	E-510.06	269		369		469		569	B-201.01	669		769	B-201.03	869	B-201.04	969	B-251.02
070	E-510.03	170	E-510.06	270		370		470		570	B-201.02	670		770	B-201.03	870	B-201.04	970	B-251.02
071	E-510.03	171	E-510.06	271		371		471		571	B-201.02	671		771	B-201.03	871	B-201.04	971	B-251.02
072	E-510.03	172	E-510.06	272		372		472		572	B-201.02	672		772	B-201.03	872	B-201.04	972	B-251.02
073	E-510.03	173	E-510.06	273		373		473		573	B-201.02	673		773	B-201.03	873	B-201.04	973	B-251.02
074	E-510.03	174	E-510.06	274		374		474		574	B-201.02	674		774	B-201.03	874	B-201.04	974	B-251.02
075	E-510.03	175	E-510.06	275		375		475		575	B-201.02	675		775	B-201.03	875	B-201.04	975	B-251.02
076	E-510.03	176	E-510.06	276		376		476		576	B-201.02	676		776	B-201.03	876	B-201.04	976	B-251.02
077	E-510.03	177	E-510.06	277		377		477		577	B-201.02	677		777	B-201.03	877	B-201.04	977	B-251.02
078	E-510.03	178	E-510.06	278		378		478		578	B-201.02	678		778	B-201.03	878	B-201.04	978	B-251.02
079	E-510.03	179	E-510.06	279		379		479		579	B-201.02	679		779	B-201.03	879	B-201.04	979	B-251.02
080	E-510.03	180	E-510.06	280		380		480		580	B-201.02	680		780	B-201.03	880	B-201.04	980	B-251.02
081	E-510.03	181	E-510.06	281		381		481		581	B-201.02	681		781	B-201.03	881	B-201.04	981	B-251.02
082	E-510.03	182	E-510.06	282		382		482		582	B-201.02	682		782	B-201.03	882	B-201.04	982	B-251.02
083	E-510.03	183	E-510.06	283		383		483		583	B-201.02	683		783	B-201.03	883	B-201.04	983	B-251.02
084	E-510.03	184	E-510.06	284		384		484		584	B-201.02	684		784	B-201.03	884	B-201.04	984	B-251.02
085	E-510.03	185	E-510.06	285		385		485		585	B-201.02	685		785	B-201.03	885	B-201.04	985	B-251.02
086	E-510.03	186	E-510.06	286		386		486		586	B-201.02	686		786	B-201.03	886	B-201.04	986	B-251.02
087	E-510.03	187	E-510.06	287		387		487		587	B-201.02	687		787	B-201.03	887	B-201.04	987	B-251.02
088	E-510.03	188	E-510.06	288		388		488		588	B-201.02	688		788	B-201.03	888	B-201.04	988	B-251.02
089	E-510.03	189	E-510.06	289		389		489		589	B-201.02	689		789	B-201.03	889	B-201.04	989	B-251.02
090	E-510.03	190	E-510.06	290		390		490		590	B-201.02	690		790	B-201.03	890	B-201.04	990	B-251.02
091	E-510.03	191	E-510.06	291		391		491		591	B-201.02	691		791	B-201.03	891	B-201.04	991	B-251.02
092	E-510.03	192	E-510.06	292		392		492		592	B-201.02	692		792	B-201.03	892	B-201.04	992	B-251.02
093	E-510.03	193	E-510.06	293		393		493		593	B-201.02	693		793	B-201.03	893	B-201.04	993	B-251.02
094	E-510.03	194	E-510.06	294		394		494		594	B-201.02	694		794	B-201.03	894	B-201.04	994	B-251.02
095	E-510.03	195	E-510.06	295		395		495		595	B-201.02	695		795	B-201.03	895	B-201.04	995	B-251.02
096	E-510.04	196	E-510.06	296		396		496		596	B-201.02	696		796	B-201.03	896	B-201.04	996	B-251.02
097	E-510.04	197	E-510.06	297		397		497		597	B-201.02	697		797	B-201.03	897	B-201.04	997	B-251.02
098	E-510.04	198	E-510.06	298		398		498		598	B-201.02	698		798	B-201.03	898	B-201.04	998	B-251.02
099	E-510.04	199	E-510.06	299		399		499		599	B-201.02	699		799	B-201.03	899	B-201.04	999	B-251.02

FORD MOTOR COMPANY
STANDARD PARTS

INDEX

THE TWO NUMBERS AT THE TOP OF THE NO. COLUMN ARE THE FIRST DIGITS OF THE FIVE DIGIT NUMBER AND FOLLOWING NUMBERS IN THE COLUMN ARE THE LAST THREE DIGITS OF THE FIVE DIGIT NUMBER.

No.	Page	No.	Page	No.	Page	No.	Page	No.	Page	No.	Page	No.	Page	No.	Page	No.	Page	No.	Page
46		46		46		46		46		46		46		46		46		46	
000	B-251.02	100	B-251.02	200	B-251.02	300		400		500		600		700		800		900	
001	B-251.02	101	B-251.02	201	B-251.02	301		401		501		601		701		801		901	
002	B-251.02	102	B-251.02	202	B-251.02	302		402		502		602		702		802		902	
003	B-251.02	103	B-251.02	203	B-251.02	303		403		503		603		703		803		903	
004	B-251.02	104	B-251.02	204	B-251.02	304		404		504		604		704		804		904	
005	B-251.02	105	B-251.02	205	B-251.02	305		405		505		605		705		805		905	
006	B-251.02	106	B-251.02	206	B-251.02	306		406		506		606		706		806		906	
007	B-251.02	107	B-251.02	207	B-251.02	307		407		507		607		707		807		907	
008	B-251.02	108	B-251.02	208	B-251.02	308		408		508		608		708		808		908	
009	B-251.02	109	B-251.02	209	B-251.02	309		409		509		609		709		809		909	
010	B-251.02	110	B-251.02	210	B-251.02	310		410		510		610		710		810		910	
011	B-251.02	111	B-251.02	211	B-251.02	311		411		511		611		711		811		911	
012	B-251.02	112	B-251.02	212	B-251.02	312		412		512		612		712		812		912	
013	B-251.02	113	B-251.02	213	B-251.02	313		413		513		613		713		813		913	
014	B-251.02	114	B-251.02	214	B-251.02	314		414		514		614		714		814		914	
015	B-251.02	115	B-251.02	215	B-251.02	315		415		515		615		715		815		915	
016	B-251.02	116	B-251.02	216	B-251.02	316		416		516		616		716		816		916	
017	B-251.02	117	B-251.02	217	B-251.02	317		417		517		617		717		817		917	
018	B-251.02	118	B-251.02	218	B-251.02	318		418		518		618		718		818		918	
019	B-251.02	119	B-251.02	219	B-251.02	319		419		519		619		719		819		919	
020	B-251.02	120	B-251.02	220	B-251.02	320		420		520		620		720		820		920	
021	B-251.02	121	B-251.02	221	B-251.02	321		421		521		621		721		821		921	
022	B-251.02	122	B-251.02	222	B-251.02	322		422		522		622		722		822		922	
023	B-251.02	123	B-251.02	223	B-251.02	323		423		523		623		723		823		923	
024	B-251.02	124	B-251.02	224	B-251.02	324		424		524		624		724		824		924	
025	B-251.02	125	B-251.02	225	B-251.02	325		425		525		625		725		825		925	
026	B-251.02	126	B-251.02	226	B-251.02	326		426		526		626		726		826		926	
027	B-251.02	127	B-251.02	227	B-251.02	327		427		527		627		727		827		927	
028	B-251.02	128	B-251.02	228	B-251.02	328		428		528		628		728		828		928	
029	B-251.02	129	B-251.02	229	B-251.02	329		429		529		629		729		829		929	
030	B-251.02	130	B-251.02	230	B-251.02	330		430		530		630		730		830		930	
031	B-251.02	131	B-251.02	231	B-251.02	331		431		531		631		731		831		931	
032	B-251.02	132	B-251.02	232	B-251.02	332		432		532		632		732		832		932	
033	B-251.02	133	B-251.02	233	B-251.02	333		433		533		633		733		833		933	
034	B-251.02	134	B-251.02	234	B-251.02	334		434		534		634		734		834		934	
035	B-251.02	135	B-251.02	235	B-251.02	335		435		535		635		735		835		935	
036	B-251.02	136	B-251.02	236		336		436		536		636		736		836		936	
037	B-251.02	137	B-251.02	237		337		437		537		637		737		837		937	
038	B-251.02	138	B-251.02	238		338		438		538		638		738		838		938	
039	B-251.02	139	B-251.02	239		339		439		539		639		739		839		939	
040	B-251.02	140	B-251.02	240		340		440		540		640		740		840		940	
041	B-251.02	141	B-251.02	241		341		441		541		641		741		841		941	
042	B-251.02	142	B-251.02	242		342		442		542		642		742		842		942	
043	B-251.02	143	B-251.02	243		343		443		543		643		743		843		943	
044	B-251.02	144	B-251.02	244		344		444		544		644		744		844		944	
045	B-251.02	145	B-251.02	245		345		445		545		645		745		845		945	
046	B-251.02	146	B-251.02	246		346		446		546		646		746		846		946	
047	B-251.02	147	B-251.02	247		347		447		547		647		747		847		947	
048	B-251.02	148	B-251.02	248		348		448		548		648		748		848		948	
049	B-251.02	149	B-251.02	249		349		449		549		649		749		849		949	
050	B-251.02	150	B-251.02	250		350		450		550		650		750		850		950	
051	B-251.02	151	B-251.02	251		351		451		551		651		751		851		951	
052	B-251.02	152	B-251.02	252		352		452		552		652		752		852		952	
053	B-251.02	153	B-251.02	253		353		453		553		653		753		853		953	
054	B-251.02	154	B-251.02	254		354		454		554		654		754		854		954	
055	B-251.02	155	B-251.02	255		355		455		555		655		755		855		955	
056	B-251.02	156	B-251.02	256		356		456		556		656		756		856		956	
057	B-251.02	157	B-251.02	257		357		457		557		657		757		857		957	
058	B-251.02	158	B-251.02	258		358		458		558		658		758		858		958	
059	B-251.02	159	B-251.02	259		359		459		559		659		759		859		959	
060	B-251.02	160	B-251.02	260		360		460		560		660		760		860		960	
061	B-251.02	161	B-251.02	261		361		461		561		661		761		861		961	
062	B-251.02	162	B-251.02	262		362		462		562		662		762		862		962	
063	B-251.02	163	B-251.02	263		363		463		563		663		763		863		963	
064	B-251.02	164	B-251.02	264		364		464		564		664		764		864		964	
065	B-251.02	165	B-251.02	265		365		465		565		665		765		865		965	
066	B-251.02	166	B-251.02	266		366		466		566		666		766		866		966	
067	B-251.02	167	B-251.02	267		367		467		567		667		767		867		967	
068	B-251.02	168	B-251.02	268		368		468		568		668		768		868		968	
069	B-251.02	169	B-251.02	269		369		469		569		669		769		869		969	
070	B-251.02	170	B-251.02	270		370		470		570		670		770		870		970	
071	B-251.02	171	B-251.02	271		371		471		571		671		771		871		971	
072	B-251.02	172	B-251.02	272		372		472		572		672		772		872		972	
073	B-251.02	173	B-251.02	273		373		473		573		673		773		873		973	
074	B-251.02	174	B-251.02	274		374		474		574		674		774		874		974	
075	B-251.02	175	B-251.02	275		375		475		575		675		775		875		975	
076	B-251.02	176	B-251.02	276		376		476		576		676		776		876		976	
077	B-251.02	177	B-251.02	277		377		477		577		677		777		877		977	
078	B-251.02	178	B-251.02	278		378		478		578		678		778		878		978	
079	B-251.02	179	B-251.02	279		379		479		579		679		779		879		979	
080	B-251.02	180	B-251.02	280		380		480		580		680		780		880		980	
081	B-251.02	181	B-251.02	281		381		481		581		681		781		881		981	
082	B-251.02	182	B-251.02	282		382		482		582		682		782		882		982	
083	B-251.02	183	B-251.02	283		383		483		583		683		783		883		983	
084	B-251.02	184	B-251.02	284		384		484		584		684		784		884		984	
085	B-251.02	185	B-251.02	285		385		485		585		685		785		885		985	
086	B-251.02	186	B-251.02	286		386		486		586		686		786		886		986	
087	B-251.02	187	B-251.02	287		387		487		587		687		787		887		987	
088	B-251.02	188	B-251.02	288		388		488		588		688		788		888		988	
089	B-251.02	189	B-251.02	289		389		489		589		689		789		889		989	
090	B-251.02	190	B-251.02	290		390		490		590		690		790		890		990	
091	B-251.02	191	B-251.02	291		391		491		591		691		791		891		991	
092	B-251.02	192	B-251.02	292		392		492		592		692		792		892		992	
093	B-251.02	193	B-251.02	293		393		493		593		693		793		893		993	
094	B-251.02	194	B-251.02	294		394		494		594		694		794		894		994	
095	B-251.02	195	B-251.02	295		395		495		595		695		795		895		995	
096	B-251.02	196	B-251.02	296		396		496		596		696		796		896		996	
097	B-251.02	197	B-251.02	297		397		497		597		697		797		897		997	
098	B-251.02	198	B-251.02	298		398		498		598		698		798		898		998	
099	B-251.02	199	B-251.02	299		399		499		599		699		799		899		999	

FORD MOTOR COMPANY
STANDARD PARTS

INDEX

THE TWO NUMBERS AT THE TOP OF THE NO. COLUMN ARE THE FIRST DIGITS OF THE FIVE DIGIT NUMBER AND FOLLOWING NUMBERS IN THE COLUMN ARE THE LAST THREE DIGITS OF THE FIVE DIGIT NUMBER.

No.	Page	No.	Page	No.	Page	No.	Page	No.	Page	No.	Page	No.	Page	No.	Page	No.	Page	No.	Page
50		50		50		50		50		50		50		50		50		50	
000	C-250.14	100	C-250.14	200	C-150.11	300	C-650.15	400	C-450.14	500	C-550.16	600	C-550.16	700	C-452.15	800	C-552.18	900	C-651.16
001	C-250.14	101	C-250.14	201	C-150.11	301	C-650.15	401	C-450.14	501	C-550.16	601	C-550.16	701	C-452.15	801	C-552.18	901	C-651.16
002	C-250.14	102	C-250.14	202	C-150.11	302	C-650.15	402	C-450.14	502	C-550.16	602	C-550.16	702	C-452.15	802	C-552.18	902	C-651.16
003	C-250.14	103	C-250.14	203	C-150.11	303	C-650.15	403	C-450.14	503	C-550.16	603	C-550.16	703	C-452.15	803	C-552.18	903	C-651.16
004	C-250.14	104	C-250.14	204	C-150.11	304	C-650.15	404	C-450.14	504	C-550.16	604	C-550.16	704	C-452.15	804	C-552.18	904	C-651.16
005	C-250.14	105	C-250.14	205	C-150.11	305	C-650.15	405	C-450.14	505	C-550.16	605	C-550.16	705	C-452.15	805	C-552.18	905	C-651.16
006	C-250.14	106	C-250.14	206	C-150.11	306	C-650.15	406	C-450.14	506	C-550.16	606	C-550.16	706	C-452.15	806	C-552.18	906	C-651.16
007	C-250.14	107	C-250.14	207	C-150.11	307	C-650.15	407	C-450.14	507	C-550.16	607	C-550.16	707	C-452.15	807	C-552.18	907	C-651.16
008	C-250.14	108	C-250.14	208	C-150.11	308	C-650.15	408	C-450.14	508	C-550.16	608	C-550.16	708	C-452.15	808	C-552.18	908	C-651.16
009	C-250.14	109	C-250.14	209	C-150.11	309	C-650.15	409	C-450.14	509	C-550.16	609	C-550.16	709	C-452.15	809	C-552.18	909	C-651.16
010	C-250.14	110	C-250.14	210	C-150.11	310	C-650.15	410	C-450.14	510	C-550.16	610	C-550.16	710	C-452.15	810	C-552.18	910	C-651.16
011	C-250.14	111	C-250.14	211	C-150.11	311	C-650.15	411	C-450.14	511	C-550.16	611	C-550.16	711	C-452.15	811	C-552.18	911	C-651.16
012	C-250.14	112	C-250.14	212	C-150.11	312	C-650.15	412	C-450.14	512	C-550.16	612	C-550.16	712	C-452.15	812	C-552.18	912	C-651.16
013	C-250.14	113	C-250.14	213	C-150.11	313	C-650.15	413	C-450.14	513	C-550.16	613	C-550.16	713	C-452.15	813	C-552.18	913	C-651.16
014	C-250.14	114	C-250.14	214	C-150.11	314	C-650.15	414	C-450.14	514	C-550.16	614	C-550.16	714	C-452.15	814	C-552.18	914	C-651.16
015	C-250.14	115	C-250.14	215	C-150.11	315	C-650.15	415	C-450.14	515	C-550.16	615	C-550.16	715	C-452.15	815	C-552.18	915	C-651.16
016	C-250.14	116	C-250.14	216	C-150.11	316	C-650.15	416	C-450.14	516	C-550.16	616	C-550.16	716	C-452.15	816	C-552.18	916	
017	C-250.14	117	C-250.14	217	C-150.11	317	C-650.15	417	C-450.14	517	C-550.16	617	C-550.16	717	C-452.15	817	C-552.18	917	
018	C-250.14	118	C-250.14	218	C-150.11	318	C-650.15	418	C-450.14	518	C-550.16	618	C-550.16	718	C-452.15	818	C-552.18	918	
019	C-250.14	119	C-250.14	219	C-150.11	319	C-650.15	419	C-450.14	519	C-550.16	619	C-550.16	719	C-452.15	819	C-552.18	919	
020	C-250.14	120	C-250.14	220	C-150.11	320	C-650.15	420	C-450.14	520	C-550.16	620	C-550.16	720	C-452.15	820	C-552.18	920	C-151.12
021	C-250.14	121	C-250.14	221	C-150.11	321	C-650.15	421	C-450.14	521	C-550.16	621		721	C-452.15	821	C-552.18	921	C-151.12
022	C-250.14	122	C-250.14	222	C-150.11	322	C-650.15	422	C-450.14	522	C-550.16	622		722	C-452.15	822	C-552.18	922	C-151.12
023	C-250.14	123	C-250.14	223	C-150.11	323	C-650.15	423	C-450.14	523	C-550.16	623		723	C-452.15	823	C-552.18	923	C-151.12
024	C-250.14	124	C-250.14	224	C-150.11	324	C-650.15	424	C-450.14	524	C-550.16	624		724	C-452.15	824	C-552.18	924	C-151.12
025	C-250.14	125		225	C-150.11	325	C-650.15	425	C-450.14	525	C-550.16	625	C-652.17	725	C-452.15	825	C-552.18	925	C-151.12
026	C-250.14	126		226	C-150.11	326	C-650.15	426	C-450.14	526	C-550.16	626	C-652.17	726	C-452.15	826	C-552.18	926	C-151.12
027	C-250.14	127		227	C-150.11	327	C-650.15	427	C-450.14	527	C-550.16	627	C-652.17	727	C-452.15	827	C-552.18	927	C-151.12
028	C-250.14	128		228	C-150.11	328	C-650.15	428	C-450.14	528	C-550.16	628	C-652.17	728	C-452.15	828	C-552.18	928	C-151.12
029	C-250.14	129		229	C-150.11	329	C-650.15	429	C-450.14	529	C-550.16	629	C-652.17	729	C-452.15	829	C-552.18	929	C-151.12
030	C-250.14	130	C-150.11	230	C-150.11	330	C-650.15	430	C-450.14	530	C-550.16	630	C-652.17	730	C-452.15	830	C-552.18	930	C-151.12
031	C-250.14	131	C-150.11	231	C-150.11	331	C-650.15	431	C-450.14	531	C-550.16	631	C-652.17	731	C-452.15	831	C-552.18	931	C-151.12
032	C-250.14	132	C-150.11	232	C-150.11	332	C-650.15	432	C-450.14	532	C-550.16	632	C-652.17	732	C-452.15	832	C-552.18	932	C-151.12
033	C-250.14	133	C-150.11	233	C-150.11	333	C-650.15	433	C-450.14	533	C-550.16	633	C-652.17	733	C-452.15	833	C-552.18	933	C-151.12
034	C-250.14	134	C-150.11	234	C-150.11	334	C-650.15	434	C-450.14	534	C-550.16	634	C-652.17	734	C-452.15	834	C-552.18	934	C-151.12
035	C-250.14	135	C-150.11	235	C-150.11	335	C-650.15	435	C-450.14	535	C-550.16	635	C-652.17	735	C-452.15	835	C-552.18	935	C-151.12
036	C-250.14	136	C-150.11	236	C-150.11	336	C-650.15	436	C-450.14	536	C-550.16	636	C-652.17	736	C-452.15	836	C-552.18	936	C-151.12
037	C-250.14	137	C-150.11	237	C-150.11	337	C-650.15	437	C-450.14	537	C-550.16	637	C-652.17	737	C-452.15	837	C-552.18	937	C-151.12
038	C-250.14	138	C-150.11	238	C-150.11	338	C-650.15	438	C-450.14	538	C-550.16	638	C-652.17	738	C-452.15	838	C-552.18	938	C-151.12
039	C-250.14	139	C-150.11	239	C-150.11	339	C-650.15	439	C-450.14	539	C-550.16	639	C-652.17	739	C-452.15	839	C-552.18	939	C-151.12
040	C-250.14	140	C-150.11	240	C-150.11	340	C-650.15	440	C-450.14	540	C-550.16	640	C-652.17	740	C-452.15	840	C-552.18	940	C-151.12
041	C-250.14	141	C-150.11	241	C-150.11	341	C-650.15	441	C-450.14	541	C-550.16	641	C-652.17	741	C-153.13	841	C-552.18	941	C-151.12
042	C-250.14	142	C-150.11	242	C-150.11	342	C-650.15	442	C-450.14	542	C-550.16	642	C-652.17	742	C-153.13	842	C-552.18	942	C-151.12
043	C-250.14	143	C-150.11	243	C-150.11	343	C-650.15	443	C-450.14	543	C-550.16	643	C-652.17	743	C-153.13	843	C-552.18	943	C-151.12
044	C-250.14	144	C-150.11	244	C-150.11	344	C-650.15	444	C-450.14	544	C-550.16	644	C-652.17	744	C-153.13	844	C-552.18	944	C-151.12
045	C-250.14	145	C-150.11	245	C-150.11	345	C-650.15	445	C-450.14	545	C-550.16	645	C-652.17	745	C-153.13	845	C-552.18	945	C-151.12
046	C-250.14	146	C-150.11	246		346	C-650.15	446	C-450.14	546	C-550.16	646	C-652.17	746	C-153.13	846	C-552.18	946	C-151.12
047	C-250.14	147	C-150.11	247		347	C-650.15	447	C-450.14	547	C-550.16	647	C-652.17	747	C-153.13	847	C-552.18	947	C-151.12
048	C-250.14	148	C-150.11	248		348	C-650.15	448	C-450.14	548	C-550.16	648	C-652.17	748	C-153.13	848	C-552.18	948	C-151.12
049	C-250.14	149	C-150.11	249		349	C-650.15	449	C-450.14	549	C-550.16	649	C-652.17	749	C-153.13	849	C-552.18	949	C-151.12
050	C-250.14	150	C-150.11	250	C-650.15	350	C-650.15	450	C-450.14	550	C-550.16	650	C-652.17	750	C-153.13	850	C-552.18	950	C-151.12
051	C-250.14	151	C-150.11	251	C-650.15	351	C-650.15	451	C-450.14	551	C-550.16	651	C-652.17	751	C-153.13	851	C-552.18	951	C-151.12
052	C-250.14	152	C-150.11	252	C-650.15	352	C-650.15	452	C-450.14	552	C-550.16	652	C-652.17	752	C-153.13	852	C-552.18	952	C-151.12
053	C-250.14	153	C-150.11	253	C-650.15	353	C-650.15	453	C-450.14	553	C-550.16	653	C-652.17	753	C-153.13	853	C-552.18	953	C-151.12
054	C-250.14	154	C-150.11	254	C-650.15	354	C-650.15	454	C-450.14	554	C-550.16	654	C-652.17	754	C-153.13	854	C-552.18	954	C-151.12
055	C-250.14	155	C-150.11	255	C-650.15	355	C-650.15	455	C-450.14	555	C-550.16	655	C-652.17	755	C-153.13	855	C-552.18	955	C-151.12
056	C-250.14	156	C-150.11	256	C-650.15	356	C-650.15	456	C-450.14	556	C-550.16	656	C-652.17	756	C-153.13	856	C-552.18	956	C-151.12
057	C-250.14	157	C-150.11	257	C-650.15	357	C-650.15	457	C-450.14	557	C-550.16	657	C-652.17	757	C-153.13	857	C-552.18	957	C-151.12
058	C-250.14	158	C-150.11	258	C-650.15	358	C-650.15	458	C-450.14	558	C-550.16	658	C-652.17	758	C-153.13	858	C-552.18	958	C-151.12
059	C-250.14	159	C-150.11	259	C-650.15	359	C-650.15	459	C-450.14	559	C-550.16	659	C-652.17	759	C-153.13	859		959	C-151.12
060	C-250.14	160	C-150.11	260	C-650.15	360	C-650.15	460	C-450.14	560	C-550.16	660	C-652.17	760	C-153.13	860	C-651.16	960	C-151.12
061	C-250.14	161	C-150.11	261	C-650.15	361	C-650.15	461	C-450.14	561	C-550.16	661	C-652.17	761	C-153.13	861	C-651.16	961	C-151.12
062	C-250.14	162	C-150.11	262	C-650.15	362	C-650.15	462	C-450.14	562	C-550.16	662	C-652.17	762	C-153.13	862	C-651.16	962	C-151.12
063	C-250.14	163	C-150.11	263	C-650.15	363	C-650.15	463	C-450.14	563	C-550.16	663	C-652.17	763	C-153.13	863	C-651.16	963	C-151.12
064	C-250.14	164	C-150.11	264	C-650.15	364	C-650.15	464	C-450.14	564	C-550.16	664	C-652.17	764	C-153.13	864	C-651.16	964	C-151.12
065	C-250.14	165	C-150.11	265	C-650.15	365	C-650.15	465	C-450.14	565	C-550.16	665	C-652.17	765	C-153.13	865	C-651.16	965	C-151.12
066	C-250.14	166	C-150.11	266	C-650.15	366	C-650.15	466	C-450.14	566	C-550.16	666	C-652.17	766	C-153.13	866	C-651.16	966	C-151.12
067	C-250.14	167	C-150.11	267	C-650.15	367	C-650.15	467	C-450.14	567	C-550.16	667	C-652.17	767	C-153.13	867	C-651.16	967	C-151.12
068	C-250.14	168	C-150.11	268	C-650.15	368	C-650.15	468	C-450.14	568	C-550.16	668	C-652.17	768	C-153.13	868	C-651.16	968	C-151.12
069	C-250.14	169	C-150.11	269	C-650.15	369	C-650.15	469	C-450.14	569	C-550.16	669	C-652.17	769	C-153.13	879	C-651.16	969	C-151.12
070	C-250.14	170	C-150.11	270	C-650.15	370	C-650.15	470	C-450.14	570	C-550.16	670	C-652.17	770	C-153.13	870	C-651.16	970	C-151.12
071	C-250.14	171	C-150.11	271	C-650.15	371	C-650.15	471	C-450.14	571	C-550.16	671	C-652.17	771	C-153.13	871	C-651.16	971	C-151.12
072	C-250.14	172	C-150.11	272	C-650.15	372	C-650.15	472	C-450.14	572	C-550.16	672	C-652.17	772	C-153.13	872	C-651.16	972	C-151.12
073	C-250.14	173	C-150.11	273	C-650.15	373	C-650.15	473	C-450.14	573	C-550.16	673	C-652.17	773	C-153.13	873	C-651.16	973	C-151.12
074	C-250.14	174	C-150.11	274	C-650.15	374	C-650.15	474	C-450.14	574	C-550.16	674	C-652.17	774	C-153.13	874	C-651.16	974	C-151.12
075	C-250.14	175	C-150.11	275	C-650.15	375	C-650.15	475	C-450.14	575	C-550.16	675	C-652.17	775	C-153.13	875	C-651.16	975	C-151.12
076	C-250.14	176	C-150.11	276	C-650.15	376		476	C-450.14	576	C-550.16	676	C-652.17	776	C-153.13	876	C-651.16	976	
077	C-250.14	177	C-150.11	277	C-650.15	377		477	C-450.14	577	C-550.16	677	C-652.17	777	C-153.13	877	C-651.16	977	
078	C-250.14	178	C-150.11	278	C-650.15	378		478	C-450.14	578	C-550.16	678	C-652.17	778	C-153.13	878	C-651.16	978	
079	C-250.14	179	C-150.11	279	C-650.15	379		479	C-450.14	579	C-550.16	679	C-652.17	779	C-153.13	879	C-651.16	979	
080	C-250.14	180	C-150.11	280	C-650.15	380	C-450.14	480	C-450.14	580	C-550.16	680	C-652.17	780	C-153.13	880	C-651.16	980	C-551.17
081	C-250.14	181	C-150.11	281	C-650.15	381	C-450.14	481	C-450.14	581	C-550.16	681	C-652.17	781	C-153.13	881	C-651.16	981	C-551.17
082	C-250.14	182	C-150.11	282	C-650.15	382	C-450.14	482	C-450.14	582	C-550.16	682	C-652.17	782	C-153.13	882	C-651.16	982	C-551.17
083	C-250.14	183	C-150.11	283	C-650.15	383	C-450.14	483	C-450.14	583	C-550.16	683	C-652.17	783	C-153.13	883	C-651.16	983	C-551.17
084	C-250.14	184	C-150.11	284	C-650.15	384	C-450.14	484	C-450.14	584	C-550.16	684	C-652.17	784	C-153.13	884	C-651.16	984	C-551.17
085	C-250.14	185	C-150.11	285	C-650.15	385	C-450.14	485	C-450.14	585	C-550.16	685	C-652.17	785	C-153.13	885	C-651.16	985	C-551.17
086	C-250.14	186	C-150.11	286	C-650.15	386	C-450.14	486	C-450.14	586	C-550.16	686	C-652.17	786	C-153.13	886	C-651.16	986	C-551.17
087	C-250.14	187	C-150.11	287	C-650.15	387	C-450.14	487	C-450.14	587	C-550.16	687	C-652.17	787	C-153.13	887	C-651.16	987	C-551.17
088	C-250.14	188	C-150.11	288	C-650.15	388	C-450.14	488	C-450.14	588	C-550.16	688	C-652.17	788	C-153.13	888	C-651.16	988	C-551.17
089	C-250.14	189	C-150.11	289	C-650.15	389	C-450.14	489	C-450.14	589	C-550.16	689	C-652.17	789	C-153.13	889	C-651.16	989	C-551.17
090	C-250.14	190	C-150.11	290	C-650.15	390	C-450.14	490	C-450.14	590	C-550.16	690		790	C-153.13	890	C-651.16	990	C-551.17
091	C-250.14	191	C-150.11	291	C-650.15	391	C-450.14	491	C-450.14	591	C-550.16	691	C-452.15	791	C-153.13	891	C-651.16	991	C-551.17
092	C-250.14	192	C-150.11	292	C-650.15	392	C-450.14	492	C-450.14	592	C-550.16	692	C-452.15	792	C-153.13	892	C-651.16	992	C-551.17
093	C-250.14	193	C-150.11	293	C-650.15	393	C-450.14	493	C-450.14	593	C-550.16	693	C-452.15	793	C-153.13	893	C-651.16	993	C-551.17
094	C-250.14	194	C-150.11	294	C-650.15	394	C-450.14	494	C-450.14	594	C-550.16	694	C-452.15	794	C-153.13	894	C-651.16	994	C-551.17
095	C-250.14	195	C-150.11	295	C-650.15	395	C-450.14	495	C-450.14	595	C-550.16	695	C-452.15	795	C-153.13	895	C-651.16	995	C-551.17
096	C-250.14	196	C-150.11	296	C-650.15	396	C-450.14	496	C-450.14	596	C-550.16	696	C-452.15	796		896	C-651.16	996	C-551.17
097	C-250.14	197	C-150.11	297	C-650.15	397	C-450.14	497	C-450.14	597	C-550.16	697	C-452.15	797		897	C-651.16	997	C-551.17
098	C-250.14	198	C-150.11	298	C-650.15	398	C-450.14	498		598	C-550.16	698	C-452.15	798		898	C-651.16	998	C-551.17
099	C-250.14	199	C-150.11	299	C-650.15	399	C-450.14	499		599	C-550.16	699	C-452.15	799		899	C-651.16	999	C-551.17

FORD MOTOR COMPANY
STANDARD PARTS

INDEX

THE TWO NUMBERS AT THE TOP OF THE NO. COLUMN ARE THE FIRST DIGITS OF THE FIVE DIGIT NUMBER AND FOLLOWING NUMBERS IN THE COLUMN ARE THE LAST THREE DIGITS OF THE FIVE DIGIT NUMBER.

No.	Page	No.	Page	No.	Page	No.	Page	No.	Page	No.	Page	No.	Page	No.	Page	No.	Page	No.	Page
51		51		51		51		51		51		51		51		51		51	
000	C-551.17	100	D-123.04	200	D-123.03	300	D-163.04	400	D-143.04	500	D-143.03	600	D-113.04	700	D-113.03	800	D-153.04	900	D-153.03
001	C-551.17	101	D-123.04	201	D-123.03	301	D-163.04	401	D-163.03	501	D-143.03	601	D-113.04	701	D-113.03	801	D-153.04	901	D-153.03
002	C-551.17	102	D 123.04	202	D-123.03	302	D-163.04	402	D-163.03	502	D-143.03	602	D-113.04	702	D-113.03	802	D-153.04	902	D-153.03
003	C-551.17	103	D-123.04	203	D-123.03	303	D-163.04	403	D-163.03	503	D-143.03	603	D-113.04	703	D-113.03	803	D-153.04	903	D-153.03
004	C-551.17	104	D-123.04	204	D-123.03	304	D-163.04	404	D-163.03	504	D-143.03	604	D-113.04	704	D-113.03	804	D-153.04	904	D-153.03
005	C-551.17	105	D-123.04	205	D-123.03	305	D 163.04	405	D 163.03	505	D-143.03	605	D-113.04	705	D-113.03	805	D-153.04	905	D-153.03
006	C-551.17	106	D 123.04	206	D-123.03	306	D 163.04	406	D-163.03	506	D-143.03	606	D-113.04	706	D-113.03	806	D-153.04	906	D-153.03
007	C-551.17	107	D-123.04	207	D-123.03	307	D-163.04	407	D-163.03	507	D-143.03	607	D-113.04	707	D-113.03	807	D-153.04	907	D-153.03
008	C-551.17	108	D-123.04	208	D-123.03	308	D-163.04	408	D-163.03	508	D-143.03	608	D-113.04	708	D-113.03	808	D-153.04	908	D-153.03
009	C-551.17	109	D-123.04	209	D-123.03	309	D-163.04	409	D-163.03	509	D-143.03	609	D-113.04	709	D-113.03	809	D-153.04	909	D-153.03
010	C-551.17	110	D-123.03	210	D-123.03	310	D-163.04	410	D-163.03	510	D-143.03	610	D-113.04	710	D-113.03	810	D-153.04	910	D-153.03
011	C-551.17	111	D-123.04	211	D-123.03	311	D-163.04	411	D-143.04	511	D-143.03	611	D-113.04	711	D-113.03	811	D-153.04	911	D-153.03
012	C-551.17	112	D-123.04	212	D-123.03	312	D-163.04	412	D-163.03	512	D-143.03	612	D-113.04	712	D-113.03	812	D-153.04	912	D-153.03
013	C-551.17	113	D-123.04	213	D-123.03	313	D-163.04	413	D-163.03	513	D-143.03	613	D-113.04	713	D-113.03	813	D-153.04	913	D-153.03
014	C-551.17	114	D-123.04	214	D-123.03	314	D-163.04	414	D-163.03	514	D-143.03	614	D-113.04	714	D-113.03	814	D-153.04	914	D-153.03
015	C-551.17	115	D-123.04	215	D-123.03	315	D-153.04	415	D-163.03	515	D-143.03	615	D-113.04	715	D-113.03	815	D-153.04	915	D-153.03
016	C-551.17	116	D-123.04	216	D-123.03	316	D-163.04	416	D-163.03	516	D-143.03	616	D-113.04	716	D-113.03	816	D-153.04	916	D-153.03
017	C-551.17	117	D-123.04	217	D-123.03	317	D-163.04	417	D-163.03	517	D-143.03	617	D-113.04	717	D-113.03	817	D-153.04	917	D-153.03
018	C-551.17	118	D-123.04	218	D-123.03	318	D-163.04	418	D-163.03	518	D-143.03	618	D-113.04	718	D-113.03	818	D-153.04	918	D-153.03
019	C-551.17	119	D-123.04	219	D-123.03	319	D-163.04	419	D-163.03	519	D-143.03	619	D-113.04	719	D-113.03	819	D-153.04	919	D-153.03
020	C-551.17	120	D-123.04	220	D-123.03	320	D-163.04	420	D-163.03	520	D-143.03	620	D-113.04	720	D-113.03	820	D-153.04	920	D-153.03
021	C-551.17	121	D-123.04	221	D-123.03	321	D-163.04	421	D-163.03	521	D-143.03	621	D-113.04	721	D-113.03	821	D-153.04	921	D-153.03
022	C-551.17	122	D-123.04	222	D-123.03	322	D-163.04	422	D-143.04	522	D-143.03	622	D-113.04	722	D-113.03	822	D-153.04	922	D-153.03
023	C-551.17	123	D-123.04	223	D-123.03	323	D-163.04	423	D-163.03	523	D-143.03	623	D-113.04	723	D-113.03	823	D-153.04	923	D-153.03
024	C-551.17	124	D-123.04	224	D-123.03	324	D-163.04	424	D-163.03	524	D-143.03	624	D-113.04	724	D-113.03	824	D-153.04	924	D-153.03
025	C-551.17	125	D-123.04	225	D-123.03	325	D-163.04	425	D-163.03	525	D-143.03	625	D-113.04	725	D-113.03	825	D-153.04	925	D-153.03
026	C-551.17	126	D-123.04	226	D-123.03	326	D-163.04	426	D-163.03	526	D-143.03	626	D-113.04	726	D-113.03	826	D-153.04	926	D-153.03
027	C-551.17	127	D-123.04	227	D-123.03	327	D-163.04	427	D-163.03	527	D-143.03	627	D-113.04	727	D-113.03	827	D-153.04	927	D-153.03
028	C-551.17	128	D-123.04	228	D-123.03	328	D-163.04	428	D-163.03	528	D-143.03	628	D-113.04	728	D-113.03	828	D-153.04	928	D-153.03
029	C-551.17	129	D-123.04	229	D-123.03	329	D-163.04	429	D-163.03	529	D-143.03	629	D-113.04	729	D-113.03	829	D-153.04	929	D-153.03
030	C-551.17	130	D-123.04	230	D-123.03	330	D-163.04	430	D-163.03	530	D-143.03	630	D-113.04	730	D-113.03	830	D-153.04	930	D-153.03
031	C-551.17	131	D-123.04	231	D-123.03	331	D-163.04	431	D-163.03	531	D-143.03	631	D-113.04	731	D-113.03	831	D-153.04	931	D-153.03
032	C-551.17	132	D-123.04	232	D-123.03	332	D 163.04	432	D-163.03	532	D-143.03	632	D-113.04	732	D-113.03	832	D-153.04	932	D-153.03
033	C-551.17	133	D-123.04	233	D-123.03	333	D-163.04	433	D-163.03	533	D-143.03	633	D-113.04	733	D-113.03	833	D-153.04	933	D-153.03
034	C-551.17	134	D-123.04	234	D-123.03	334	D-163.04	434	D-163.03	534	D-143.03	634	D-113.04	734	D-113.03	834	D-153.04	934	D-153.03
035	C-551.17	135	D-123.04	235	D-123.03	335	D-163.04	435	D-163.03	535	D-143.03	635	D-113.04	735	D-113.03	835	D-153.04	935	D-153.03
036	C-551.17	136	D-123.04	236		336	D-163.04	436	D-163.03	536	D-143.03	636	D-113.04	736	D-113.03	836	D-153.04	936	D-153.03
037	C-551.17	137	D-123.04	237		337	D-163.04	437	D-163.03	537	D-143.03	637	D-113.04	737	D-113.03	837	D-153.04	937	D-153.03
038		138	D-123.04	238		338	D-163.04	438	D-163.03	538	D-143.03	638	D-113.04	738	D-113.03	838	D-153.04	938	D-153.03
039		139	D-123.04	239		339	D-163.04	439	D-163.03	539	D-143.03	639	D-113.04	739	D-113.03	839	D-153.04	939	D-153.03
040		140	D 123.04	240	D-163.04	340	D 163.03	440	D-163.03	540	D-143.03	640	D-113.04	740	D-113.03	840	D-153.04	940	D-153.03
041		141	D-123.04	241	D-163.04	341	D-163.03	441	D-163.03	541	D-143.03	641	D-113.04	741	D-113.03	841	D-153.04	941	D 153.03
042		142		242	D-163.04	342	D-163.03	442	D-163.03	542	D-143.03	642	D-113.04	742	D-113.03	842	D-153.04	942	D-153.03
043		143		243	D-163.04	343	D-163.03	443		543	D-143.03	643	D-113.04	743	D-113.03	843	D-153.04	943	D-153.03
044		144		244	D-163.04	344	D-163.03	444		544	D-143.03	644	D-113.04	744	D-113.03	844	D-153.04	944	D-153.03
045		145	D-123.03	245	D-163.04	345	D-163.03	445	D-143.03	545	D-143.03	645	D-113.04	745	D-113.03	845	D-153.04	945	D-153.03
046		146	D-123.03	246	D-163.04	346	D-163.03	446	D-143.03	546		646	D-113.04	746	D-113.03	846	D-153.04	946	D-153.03
047		147	D-123.03	247	D-163.04	347	D-163.03	447		547		647	D-113.04	747	D-113.03	847	D-153.04	947	D-153.03
048		148	D-123.03	248	D-163.04	348	D-163.03	448		548		648	D-113.04	748	D-113.03	848	D-153.04	948	D-153.03
049		149	D-123.03	249	D-163.04	349	D-163.03	449		549		649	D-113.04	749	D-113.03	849	D-153.04	949	D-153.03
050	D-123.04	150	D-123.03	250	D-163.04	350	D-163.03	450	D-143.03	550	D-113.04	650	D-113.03	750	D-153.04	850	D-153.03	950	
051	D-123.04	151	D-123.03	251	D-163.04	351	D-163.03	451	D-143.03	551	D-113.04	651	D-113.03	751	D-153.04	851	D-153.03	951	
052	D-123.04	152	D-123.03	252	D-163.04	352	D-163.03	452	D-143.03	552	D-113.04	652	D-113.03	752	D-153.04	852	D-153.03	952	
053	D-123.04	153	D-123.03	253	D-163.04	353	D-163.03	453	D-143.03	553	D-113.04	653	D-113.03	753	D-153.04	853	D-153.03	953	
054	D-123.04	154	D-123.03	254	D-163.04	354	D-163.03	454	D-143.03	554	D-113.04	654	D-113.03	754	D-153.04	854	D-153.03	954	
055	D-123.04	155	D-123.03	255	D-163.04	355	D-163.03	455	D-143.03	555	D-113.04	655	D-113.03	755	D-153.04	855	D-153.03	955	
056	D-123.04	156	D-123.03	256	D-163.04	356	D-163.03	456	D-143.03	556	D-113.04	656	D-113.03	756	D-153.04	856	D-153.03	956	
057	D-123.04	157	D-123.03	257	D-163.04	357	D-163.03	457		557	D-113.04	657	D-113.03	757	D-153.04	857	D-153.03	957	
058	D-123.04	158	D-123.03	258	D-163.04	358	D-163.03	458		558	D-113.04	658	D-113.03	758	D-153.04	858	D-153.03	958	
059	D-123.04	159	D-123.03	259	D-163.04	359	D-163.03	459	D-143.03	559	D-113.04	659	D-113.03	759	D-153.04	859	D-153.03	959	
060	D-123.04	160	D-123.03	260	D-163.04	360	D-163.03	460	D-143.03	560	D-113.04	660	D-113.03	760	D-153.04	860	D-153.03	960	
061	D-123.04	161	D 123.03	261	D-163.04	361	D-163.03	461	D-143.03	561	D-113.04	661	D-113.03	761	D-153.04	861	D-153.03	961	
062	D-123.04	162	D-123.03	262	D-163.04	362	D-163.03	462	D-143.03	562	D-113.04	662	D-113.03	762	D-153.04	862	D-153.03	962	
063	D-123.04	163	D-123.03	263	D-163.04	363	D-163.03	463	D-143.03	563	D-113.04	663	D-113.03	763	D-153.04	863	D-153.03	963	
064	D-123.04	164	D-123.03	264	D-163.04	364	D-163.03	464	D-143.03	564	D-113.04	664	D-113.03	764	D 153.04	864	D-153.03	964	
065	D-123.04	165	D-123.03	265	D-163.04	365	D-163.03	465	D 143.03	565	D-113.04	665	D-113.03	765	D-153.04	865	D-153.03	965	
066	D 123.04	166	D-123.03	266	D-163.04	366	D 163.03	466	D-143.03	566	D-113.04	666	D-113.03	766	D-153.04	866	D-153.03	966	
067	D-123.04	167	D-123.03	267	D-163.04	367	D-163.03	467	D-143.03	567	D-113.04	667	D-113.03	767	D-153.04	867	D-153.03	967	
068	D-123.04	168	D-123.03	268	D-163.04	368	D-163.03	468	D-143.03	568	D-113.04	668	D-113.03	768	D-153.04	868	D-153.03	968	
069	D-123.04	169	D-123.03	269	D-163.04	369	D-163.03	469	D-143.03	569	D-113.04	669	D-113.03	769	D-153.04	869	D-153.03	969	
070	D-123.04	170	D-123.03	270	D-163.04	370	D-163.03	470	D-143.03	570	D-113.04	670	D-113.03	770	D-153.04	870	D-153.03	970	
071	D-123.04	171	D-123.03	271	D-163.04	371	D-163.03	471	D-143.03	571	D-113.04	671	D-113.03	771	D-153.04	871	D-153.03	971	
072	D-123.04	172	D-123.03	272	D-163.04	372	D-163.03	472	D 143.03	572	D-113.04	672	D-113.03	772	D-153.04	872	D-153.03	972	
073	D-123.04	173	D-123.03	273	D-163.04	373	D-163.03	473	D-143.03	573	D-113.04	673	D-113.03	773	D-153.04	873	D-153.03	973	
074	D-123.04	174	D-123.03	274	D-163.04	374	D-163.03	474	D-143.03	574	D-113.04	674	D-113.03	774	D-153.04	874	D-153.03	974	
075	D-123.04	175	D-123.03	275	D-163.04	375	D-163.03	475	D-143.03	575	D-113.04	675	D-113.03	775	D-153.04	875	D-153.03	975	
076	D-123.04	176	D-123.03	276	D-163.04	376	D-163.03	476	D-143.03	576	D-113.04	676	D-113.03	776	D-153.04	876	D-153.03	976	
077	D-123.04	177	D-123.03	277	D-163.04	377	D-163.03	477	D-143.03	577	D-113.04	677	D-113.03	777	D-153.04	877	D-153.03	977	
078	D-123.04	178	D-123.03	278	D-163.04	378	D-163.03	478	D-143.03	578	D-113.04	678	D-113.03	778	D-153.04	878	D-153.03	978	
079	D-123.04	179	D-123.03	279	D-163.04	379	D-163.03	479	D-143.03	579	D-113.04	679	D-113.03	779	D-153.04	879	D-153.03	979	
080	D-123.04	180	D-123.03	280	D-163.04	380	D-163.03	480	D-143.03	580	D-113.04	680	D-113.03	780	D-153.04	880	D-153.03	980	
081	D-123.04	181	D-123.03	281	D-163.04	381	D-163.03	481	D-143.03	581	D-113.04	681	D-113.03	781	D-153.04	881	D-153.03	981	
082	D-123.04	182	D-123.03	282	D-163.04	382	D-163.03	482	D-143.03	582	D-113.04	682	D-113.03	782	D-153.04	882	D-153.03	982	
083	D-123.04	183	D-123.03	283	D-163.04	383	D-163.03	483	D-143.03	583	D-113.04	683	D-113.03	783	D-153.04	883	D-153.03	983	
084	D-123.04	184	D-123.03	284	D-163.04	384	D-163.03	484	D-143.03	584	D-113.04	684	D-113.03	784	D-153.04	884	D-153.03	984	
085	D-123.04	185	D-123.03	285	D-163.04	385	D-163.03	485	D-143.03	585	D-113.04	685	D-113.03	785	D-153.04	885	D-153.03	985	
086	D-123.04	186	D-123.03	286	D-163.04	386	D-163.03	486	D-143.03	586	D-113.04	686	D-113.03	786	D-153.04	886	D-153.03	986	
087	D-123.04	187	D-123.03	287	D-163.04	387	D-163.03	487	D-143.03	587	D-113.04	687	D-113.03	787	D-153.04	887	D-153.03	987	
088	D-123.04	188	D-123.03	288	D-163.04	388	D-163.03	488	D-143.03	588	D-113.04	688	D-113.03	788	D-153.04	888	D-153.03	988	
089	D-123.04	189	D-123.03	289	D-163.04	389	D-163.03	489	D-143.03	589	D-113.04	689	D-113.03	789	D-153.04	889	D-153.03	989	
090	D-123.04	190	D-123.03	290	D-163.04	390	D-163.03	490	D-143.03	590	D-113.04	690	D-113.03	790	D-153.04	890	D-153.03	990	
091	D-123.04	191	D-123.03	291	D-163.04	391	D-163.03	491	D-143.03	591	D-113.04	691	D-113.03	791	D-153.04	891	D-153.03	991	
092	D-123.04	192	D-123.03	292	D-163.04	392	D-163.03	492	D-143.03	592	D-113.04	692	D-113.03	792	D-153.04	892	D-153.03	992	
093	D-123.04	193	D 123.03	293	D-163.04	393	D-163.03	493	D-143.03	593	D-113.04	693	D-113.03	793	D-153.04	893	D-153.03	993	
094	D-123.04	194	D-123.03	294	D-163.04	394	D-163.03	494	D-143.03	594	D-113.04	694	D-113.03	794	D-153.04	894	D-153.03	994	
095	D-123.04	195	D-123.03	295	D-163.04	395	D-163.03	495	D-143.03	595	D-113.04	695	D-113.03	795	D-153.04	895	D-153.03	995	
096	D-123.04	196	D-123.03	296	D-163.04	396	D-163.03	496	D-143.03	596	D-113.04	696	D-113.03	796	D-153.04	896	D-153.03	996	
097	D-123.04	197	D-123.03	297	D-163.04	397	D-163.03	497	D-143.03	597	D-113.04	697	D-113.03	797	D-153.04	897	D-153.03	997	
098	D-123.04	198	D-123.03	298	D-163.04	398	D-163.03	498	D-143.03	598	D-113.04	698	D-113.03	798	D-153.04	898	D-153.03	998	
099	D-123.04	199	D-123.03	299	D-163.04	399	D-163.03	499	D-143.03	599	D-113.04	699	D-113.03	799	D-153.04	899	D-153.03	999	

FORD MOTOR COMPANY
STANDARD PARTS

INDEX

THE TWO NUMBERS AT THE TOP OF THE NO. COLUMN ARE THE FIRST DIGITS OF THE FIVE DIGIT NUMBER AND FOLLOWING NUMBERS IN THE COLUMN ARE THE LAST THREE DIGITS OF THE FIVE DIGIT NUMBER.

No.	Page	No.	Page	No.	Page	No.	Page	No.	Page	No.	Page	No.	Page	No.	Page	No.	Page	No.	Page
52		52		52				52		52		52		52		52		52	
000	D-123.01	100	D-123.02	200	D-163.01	300	D-163.02	400	D-143.02	500	D-143.02	600	D-113.02	700	D-113.02	800	D-153.02	900	D-143.04
001		101	D-123.02	201	D-163.01	301	D-163.02	401	D-143.02	501	D-142.02	601	D-133.02	701	D-113.02	801	D-153.02	901	D-143.04
002		102	D-123.02	202	D-163.01	302	D-163.02	402	D-143.02	502	D-143.02	602	D-113.02	702	D-113.02	802	D-153.02	902	
003	D-123.01	103	D-123.02	203	D-163.01	303	D-163.02	403	D-143.02	503	D-143.02	603	D-113.02	703	D-113.02	803	D-153.02	903	
004	D-123.01	104	D-123.02	204	D-163.01	304	D-163.02	404	D-143.02	504	D-143.02	604	D-113.02	704	D-113.02	804	D-153.02	904	
005	D-123.01	105	D-123.02	205	D-163.01	305	D-163.02	405	D-143.02	505	D-143.02	605	D-113.02	705	D-113.02	805	D-153.02	905	D-143.04
006	D-123.01	106		206	D-163.01	306	D-163.02	406	D-143.02	506	D-143.02	606	D-113.02	706	D-113.02	806	D-153.02	906	D-143.04
007	D-123.01	107		207	D-163.01	307	D-163.02	407	D-143.02	507	D-143.02	607	D-113.02	707	D-113.02	807	D-153.02	907	D-143.04
008	D-123.01	108		208	D-163.01	308	D-163.02	408	D-143.02	508	D-143.02	608	D-113.02	708	D-113.02	808	D-153.02	908	D-143.04
009	D-123.01	109		209	D-163.01	309	D-163.02	409	D-143.02	509	D-143.02	609	D-113.02	709		809	D-153.02	909	D-143.04
010	D-123.01	110		210	D-163.01	310	D-163.02	410	D-143.02	510	D-143.02	610	D-113.02	710		810	D-153.02	910	D-143.04
011	D-123.01	111	D-123.02	211	D-163.01	311	D-163.02	411	D-143.02	511	D-143.02	611	D-113.02	711	D-153.01	811	D-153.02	911	D-143.04
012	D-123.01	112		212	D-163.01	312	D-163.02	412	D-143.02	512	D-143.02	612	D-113.02	712	D-153.01	812	D-153.02	912	
013	D-123.01	113		213		313	D-163.02	413	D-143.02	513	D-143.02	613	D-113.02	713	D-153.01	813	D-153.02	913	
014	D-123.01	114	D-123.02	214	D-163.02	314	D-163.02	414	D-143.02	514	D-143.02	614	D-113.02	714	D-153.01	814	D-153.02	914	D-143.04
015	D-123.01	115	D-123.02	215	D-163.02	315	D-163.02	415	D-143.02	515	D-143.02	615	D-113.02	715	D-153.01	815	D-153.02	915	D-143.04
016	D-123.01	116	D-123.02	216	D-163.02	316	D-163.02	416	D-143.02	516	D-113.02	616	D-113.02	716	D-153.01	816	D-153.02	916	D-143.04
017	D-123.01	117	D-123.02	217	D-163.02	317	D-163.02	417	D-143.02	517	D-143.02	617	D-113.02	717	D-153.01	817	D-153.02	917	D-143.04
018	D-123.01	118	D-123.02	218	D-163.02	318	D-163.02	418	D-143.02	518	D-143.02	618	D-113.02	718	D-153.01	818	D-153.02	918	D-143.04
019	D-123.01	119	D-123.02	219	D-163.02	319	D-163.02	419	D-143.02	519	D-143.02	619	D-113.02	719	D-153.01	819	D-153.02	919	D-143.04
020	D-123.01	120	D-123.02	220	D-163.02	320	D-163.02	420	D-143.02	520	D-143.02	620	D-113.02	720	D-153.01	820	D-153.02	920	D-143.04
021	D-123.01	121	D-123.02	221	D-163.02	321	D-163.02	421	D-143.02	521	D-143.02	621	D-113.02	721	D-153.01	821	D-153.02	921	D-143.04
022	D-123.01	122	D-123.02	222	D-163.02	322	D-163.02	422	D-143.02	522	D-143.02	622	D-113.02	722	D-153.01	822	D-153.02	922	D-143.04
023	D-123.01	123	D-123.02	223	D-163.02	323	D-163.02	423	D-143.02	523	D-143.02	623	D-113.02	723	D-153.01	823	D-153.02	923	D-143.04
024	D-123.01	124	D-123.02	224	D-163.02	324	D-163.02	424	D-143.02	524	D-143.02	624	D-113.02	724	D-153.01	824	D-153.02	924	D-143.04
025	D-123.01	125	D-123.02	225	D-163.02	325	D-163.02	425	D-143.02	525	D-143.02	625	D-113.02	725	D-153.01	825	D-153.02	925	D-143.04
026	D-123.01	126	D-123.02	226	D-163.02	326	D-163.02	426	D-143.02	526		626	D-113.02	726	D-153.01	826	D-153.02	926	D-143.04
027	D-123.01	127	D-123.02	227	D-163.02	327	D-163.02	427	D-143.02	527		627	D-113.02	727	D-153.01	827	D-153.02	927	D-143.04
028	D-123.01	128	D-123.02	228	D-163.02	328		428	D-143.02	528		628	D-113.02	728	D-153.01	828	D-153.02	928	D-143.04
029	D-123.01	129	D-123.02	229	D-163.02	329		429	D-143.02	529		629	D-113.02	729	D-153.01	829	D-153.02	929	D-143.04
030	D-123.01	130	D-123.02	230	D-163.02	330		430	D-143.02	530		630	D-113.02	730	D-153.01	830		930	D-143.04
031	D-123.01	131	D-123.02	231	D-163.02	331	D-143.01	431	D-143.02	531	D-113.01	631	D-113.02	731	D-153.01	831	D-153.02	931	D-143.04
032	D-123.01	132	D-123.02	232	D-163.02	332		432	D-143.02	532	D-113.01	632	D-113.02	732	D-153.01	832	D-153.02	932	D-143.04
033	D-123.01	133	D-123.02	233	D-163.02	333		433	D-143.02	533	D-113.01	633	D-113.02	733	D-153.01	833	D-153.02	933	D-143.04
034	D-123.01	134	D-123.02	234	D-163.02	334	D-143.01	434	D-143.02	534	D-113.01	634	D-113.02	734	D-153.01	834	D-153.02	934	D-143.04
035	D-123.01	135	D-123.02	235	D-163.02	335	D-143.01	435	D-143.02	535	D-113.01	635	D-113.02	735	D-153.01	835	D-153.02	935	D-143.04
036	D-123.01	136	D-123.02	236	D-163.02	336	D-143.01	436	D-143.02	536	D-113.01	636	D-113.02	736	D-153.01	836	D-153.02	936	D-143.04
037	D-123.01	137	D-123.02	237	D-163.02	337	D-143.01	437	D-143.02	537	D-113.01	637	D-113.02	737	D-153.01	837	D-153.02	937	D-143.04
038	D-123.01	138	D-123.02	238	D-163.02	338	D-143.01	438	D-143.02	538	D-113.01	638	D-113.02	738	D-153.01	838	D-153.02	938	D-143.04
039	D-123.01	139	D-123.02	239	D-163.02	339		439	D-143.02	539	D-113.01	639	D-113.02	739	D-153.01	839	D-153.02	939	D-143.04
040	D-123.01	140	D-123.02	240	D-163.02	340	D-143.01	440	D-143.02	540	D-113.01	640	D-113.02	740	D-153.01	840	D-153.02	940	D-143.04
041	D-123.01	141	D-123.02	241	D-163.02	341	D-143.01	441	D-143.02	541	D-113.01	641	D-113.02	741	D-153.01	841	D-153.02	941	D-143.04
042	D-123.01	142	D-123.02	242	D-163.02	342	D-143.01	442	D-143.02	542	D-113.01	642	D-113.02	742	D-153.01	842	D-153.02	942	D-143.04
043	D-123.01	143	D-123.02	243	D-163.02	343	D-143.01	443	D-143.02	543	D-113.01	643	D-113.02	743	D-153.01	843	D-153.02	943	D-143.04
044	D-123.01	144	D-123.02	244	D-163.02	344	D-143.01	444	D-143.02	544	D-113.01	644	D-113.02	744	D-153.01	844	D-153.02	944	D-143.04
045	D-123.01	145	D-123.02	245	D-163.02	345	D-143.01	445	D-143.02	545	D-113.01	645	D-113.02	745	D-153.01	845	D-153.02	945	D-143.04
046	D-123.01	146	D-123.02	246	D-163.02	346	D-143.01	446	D-143.02	546	D-113.01	646	D-113.02	746	D-153.01	846	D-153.02	946	D-143.04
047	D-123.01	147	D-123.02	247	D-163.02	347	D-143.01	447	D-143.02	547	D-113.01	647	D-113.02	747	D-153.01	847	D-153.02	947	D-143.04
048		148	D-123.02	248	D-163.02	348	D-143.01	448	D-143.02	548	D-113.01	648		748	D-153.01	848	D-153.02	948	D-143.04
049		149	D-123.02	249	D-163.02	349	D-143.01	449	D-143.02	549	D-113.01	649		749	D-153.01	849	D-153.02	949	D-143.04
050	D-123.02	150	D-123.02	250	D-163.02	350	D-143.01	450	D-143.02	550	D-113.01	650		750	D-153.01	850	D-153.02	950	D-143.04
051	D-123.02	151	D-123.02	251	D-163.02	351	D-143.01	451	D-143.02	551	D-113.01	651	D-113.02	751	D-153.01	851	D-153.02	951	D-143.04
052	D-123.02	152	D-123.02	252	D-163.02	352	D-143.01	452	D-143.02	552	D-113.01	652	D-113.02	752	D-153.01	852	D-153.02	952	D-143.04
053	D-123.02	153	D-123.02	253	D-163.02	353	D-143.01	453	D-143.02	553	D-113.01	653	D-113.02	753	D-153.01	853	D-153.02	953	D-143.04
054	D-123.02	154	D-123.02	254	D-163.02	354	D-143.01	454	D-143.02	554	D-113.01	654	D-113.02	754	D-153.01	854	D-153.02	954	D-143.04
055	D-123.02	155	D-123.02	255	D-163.02	355	D-143.01	455	D-143.02	555	D-113.01	655	D-113.02	755	D-153.01	855	D-153.02	955	D-143.04
056	D-123.02	156	D-123.02	256	D-163.02	356	D-143.01	456	D-143.02	556	D-113.01	656	D-113.02	756	D-153.01	856	D-153.02	956	D-143.04
057	D-123.02	157	D-123.02	257	D-163.02	357	D-143.01	457	D-143.02	557	D-113.01	657	D-113.02	757	D-153.01	857	D-153.02	957	D-143.04
058	D-123.02	158	D-123.02	258	D-163.02	358	D-143.01	458		558	D-113.01	658	D-113.02	758	D-153.01	858	D-153.02	958	D-143.04
059	D-123.02	159		259	D-163.02	359	D-143.01	459		559	D-113.01	659	D-113.02	759	D-153.01	859	D-153.02	959	D-143.04
060	D-123.02	160		260	D-163.02	360	D-143.01	460		560	D-113.01	660	D-113.02	760	D-153.01	860	D-153.02	960	D-143.04
061	D-123.02	161	D-163.01	261	D-163.02	361	D-143.01	461	D-143.02	561	D-113.01	661	D-113.02	761	D-153.01	861	D-153.02	961	D-143.04
062	D-123.02	162	D-163.01	262	D-163.02	362	D-143.01	462		562	D-113.01	662		762	D-153.01	862	D-153.02	962	D-143.04
063	D-123.02	163	D-163.01	263	D-163.02	363	D-143.01	463		563	D-133.01	663	D-113.02	763	D-153.01	863	D-153.02	963	D-143.04
064	D-123.02	164	D-163.01	264	D-163.02	364	D-143.01	464	D-143.02	564	D-113.01	664	D-113.02	764	D-153.01	864	D-153.02	964	D-143.04
065	D-123.02	165	D-163.01	265	D-163.02	365	D-143.01	465	D-143.02	565	D-113.01	665	D-113.02	765	D-153.01	865	D-153.02	965	D-143.04
066	D-123.02	166	D-163.01	266	D-163.02	366	D-143.01	466	D-143.02	566	D-113.01	666	D-113.02	766	D-153.01	866	D-153.02	966	D-143.04
067	D-123.02	167	D-163.01	267	D-163.02	367	D-143.01	467	D-143.02	567	D-113.01	667	D-113.02	767	D-153.01	867	D-153.02	967	D-143.04
068	D-123.02	168	D-163.01	268	D-163.02	368	D-143.01	468	D-143.02	568	D-113.01	668	D-113.02	768	D-153.01	868	D-153.02	968	D-143.04
069	D-123.02	169	D-163.01	269	D-163.02	369	D-143.01	469		569	D-113.01	669	D-113.02	769		869	D-153.02	969	D-143.04
070	D-123.02	170	D-163.01	270	D-163.02	370	D-143.01	470	D-143.02	570	D-113.01	670	D-113.02	770		870	D-153.02	970	D-143.04
071	D-123.02	171	D-163.01	271	D-163.02	371	D-143.01	471	D-143.02	571	D-113.01	671	D-113.02	771	D-153.02	871	D-153.02	971	D-143.04
072	D-123.02	172	D-163.01	272		372	D-143.01	472	D-143.02	572	D-113.01	672	D-113.02	772	D-153.02	872	D-153.02	972	D-143.04
073	D-123.02	173	D-163.01	273		373	D-143.01	473	D-143.02	573	D-113.01	673	D-113.02	773	D-153.02	873	D-153.02	973	D-143.04
074	D-123.02	174	D-163.01	274		374	D-143.01	474	D-143.02	574	D-113.01	674	D-113.02	774	D-153.02	874	D-153.02	974	D-143.04
075	D-123.02	175	D-163.01	275		375	D-143.01	475	D-143.02	575	D-113.01	675	D-113.02	775	D-153.02	875	D-153.02	975	D-143.04
076	D-123.02	176	D-163.01	276	D-163.02	376	D-143.01	476	D-143.02	576	D-113.01	676	D-113.02	776	D-153.02	876	D-153.02	976	D-143.04
077	D-123.02	177	D-163.01	277	D-163.02	377	D-143.01	477	D-143.02	577	D-113.01	677	D-113.02	777	D-153.02	877	D-153.02	977	D-143.04
078	D-123.02	178	D-163.01	278	D-163.02	378	D-143.01	478	D-143.02	578	D-113.01	678	D-113.02	778	D-153.02	878	D-153.02	978	D-143.04
079	D-123.02	179	D-163.01	279	D-163.02	379	D-143.01	479	D-143.02	579	D-113.01	679	D-113.02	779	D-153.02	879	D-153.02	979	D-143.04
080	D-123.02	180	D-163.01	280	D-163.02	380	D-143.01	480	D-143.02	580	D-113.01	680	D-113.02	780	D-153.02	880	D-153.02	980	D-143.04
081	D-123.02	181	D-163.01	281	D-163.02	381	D-143.01	481	D-143.02	581	D-113.01	681	D-113.02	781	D-153.02	881	D-153.02	981	D-143.04
082	D-123.02	182	D-163.01	282	D-163.02	382	D-143.01	482	D-143.02	582	D-113.01	682	D-113.02	782	D-153.02	882	D-153.02	982	D-143.04
083	D-123.02	183	D-163.01	283	D-163.02	383	D-143.01	483	D-143.02	583	D-113.01	683	D-113.02	783	D-153.02	883	D-153.02	983	D-143.04
084	D-123.02	184	D-163.01	284	D-163.02	384	D-143.01	484	D-143.02	584	D-113.01	684	D-113.02	784	D-153.02	884	D-153.02	984	D-143.04
085	D-123.02	185	D-163.01	285	D-163.02	385	D-143.01	485	D-143.02	585	D-113.01	685	D-113.02	785	D-153.02	885	D-153.02	985	D-143.04
086	D-123.02	186	D-163.01	286	D-163.02	386	D-143.01	486	D-143.02	586	D-113.01	686	D-113.02	786	D-153.02	886	D-153.02	986	D-143.04
087	D-123.02	187	D-163.01	287	D-163.02	387	D-143.01	487	D-143.02	587	D-113.01	687	D-113.02	787	D-153.02	887	D-153.02	987	D-143.04
088	D-123.02	188	D-163.01	288	D-163.02	388	D-143.01	488	D-143.02	588		688	D-113.02	788	D-153.02	888		988	D-143.04
089	D-123.02	189	D-163.01	289	D-163.02	389	D-143.01	489	D-143.02	589		689	D-113.02	789	D-153.02	889		989	D-143.04
090	D-123.02	190	D-163.01	290	D-163.02	390	D-143.01	490	D-143.02	590		690	D-113.02	790	D-153.02	890		990	D-143.04
091	D-123.02	191	D-163.01	291	D-163.02	391	D-143.01	491	D-143.02	591	D-113.02	691	D-113.02	791	D-153.02	891		991	D-143.04
092	D-123.02	192	D-163.01	292	D-163.02	392	D-143.01	492	D-143.02	592	D-113.02	692	D-113.02	792	D-153.02	892		992	D-143.04
093	D-123.02	193	D-163.01	293	D-163.02	393	D-143.01	493	D-143.02	593	D-113.02	693	D-113.02	793	D-153.02	893		993	D-143.04
094	D-123.02	194	D-163.01	294	D-163.02	394	D-143.01	494	D-143.02	594	D-113.02	694	D-113.02	794	D-153.02	894		994	D-143.04
095	D-123.02	195	D-163.01	295	D-163.02	395	D-143.01	495	D-143.02	595	D-113.02	695	D-113.02	795	D-153.02	895		995	D-143.04
096	D-123.02	196	D-163.01	296	D-163.02	396		496	D-143.02	596	D-113.02	696	D-113.02	796	D-153.02	896		996	D-143.04
097	D-123.02	197	D-163.01	297	D-163.02	397		497	D-143.02	597	D-113.02	697	D-113.02	797	D-153.02	897		997	D-143.04
098	D-123.02	198	D-163.01	298	D-163.02	398		498	D-143.02	598	D-113.02	698	D-113.02	798	D-153.02	898		998	
099	D-123.02	199	D-163.01	299	D-163.02	399		499	D-143.02	599	D-113.02	699	D-113.02	799	D-153.02	899		999	

FORD MOTOR COMPANY
STANDARD PARTS

INDEX

THE TWO NUMBERS AT THE TOP OF THE NO. COLUMN ARE THE FIRST DIGITS OF THE FIVE DIGIT NUMBER AND FOLLOWING NUMBERS IN THE COLUMN ARE THE LAST THREE DIGITS OF THE FIVE DIGIT NUMBER.

No.	Page	No.	Page	No.	Page	No.	Page	No.	Page	No.	Page	No.	Page	No.	Page	No.	Page	No.	Page
53		53		53		53		53		53		53		53		53		53	
000	D-143.05	100	D-143.06	200	D-143.07	300	D-143.08	400	D-143.09	500	D-123.06	600	D-123.07	700	D-123.08	800	D-123.09	900	C-600.02
001	D-143.05	101	D-143.06	201	D-143.07	301	D-143.08	401	D-143.09	501	D-123.06	601	D-123.07	701	D-123.08	801	D-123.09	901	C-600.02
002	D-143.05	102	D-143.06	202	D-143.07	302	D-143.08	402	D-143.09	502	D-123.06	602	D-123.07	702	D-123.08	802	D-123.09	902	C-600.02
003	D-143.05	103	D-143.06	203	D-143.07	303	D-143.08	403	D-143.09	503	D-123.06	603	D-123.07	703	D-123.08	803	D-123.09	903	C-600.02
004	D-143.05	104	D-143.06	204	D-143.07	304	D-143.08	404	D-143.09	504	D-123.06	604	D-123.07	704	D-123.08	804	D-123.09	904	C-600.02
005	D-143.05	105	D-143.06	205	D-143.07	305	D-143.08	405	D-143.09	505	D-123.06	605	D-123.07	705	D-123.08	805	D-123.09	905	C-600.02
006	D-143.05	106	D-143.06	206	D-143.07	306	D-143.08	406	D-143.09	506	D-123.06	606	D-123.07	706	D-123.08	806	D-123.09	906	C-600.02
007	D-143.05	107	D-143.06	207	D-143.07	307	D-143.08	407	D-143.09	507	D-123.06	607	D-123.07	707	D-123.08	807	D-123.09	907	C-600.02
008	D-143.05	108	D-143.06	208	D-143.07	308	D-143.08	408	D-143.09	508	D-123.06	608	D-123.07	708	D-123.08	808	D-123.09	908	C-600.02
009	D-143.05	109	D-143.06	209	D-143.07	309	D-143.08	409	D-123.05	509	D-123.06	609	D-123.07	709	D-123.08	809	D-123.09	909	C-600.02
010	D-143.05	110	D-143.06	210	D-143.07	310	D-143.08	410	D-123.05	510	D-123.06	610	D-123.07	710	D 123.08	810	D-123.09	910	C-600.02
011	D-143.05	111	D-143.06	211	D-143.07	311	D-143.08	411	D-123.05	511	D-123.06	611	D-123.07	711	D-123.08	811	D-123.09	911	C-600.02
012	D-143.05	112	D-143.06	212	D-143.07	312	D-143.08	412	D-123.05	512	D-123.06	612	D-123.07	712	D-123.08	812	D-123.09	912	C-600.02
013	D-143.05	113	D-143.06	213	D-143.07	313	D-143.08	413	D-123.05	513	D-123.06	613	D-123.07	713	D-123.08	813	D-123.09	913	C-600.02
014	D-143.05	114	D-143.06	214	D-143.07	314	D-143.08	414	D-123.05	514	D-123.06	614	D-123.07	714	D-123.08	814	D-123.09	914	C-600.02
015	D-143.05	115	D-143.06	215	D-143.07	315	D-143.08	415	D-123.05	515	D-123.06	615	D-123.07	715	D-123.08	815	D-123.09	915	C-600.02
016	D-143.05	116	D-143.06	216	D-143.07	316	D-143.08	416	D-123.05	516	D-123.06	616	D-123.07	716	D-123.08	816	D-123.09	916	C-600.02
017	D-143.05	117	D-143.06	217	D-143.07	317	D-143.08	417	D-123.05	517	D-123.06	617	D-123.07	717	D-123.08	817	D-123.09	917	C-600.02
018	D-143.05	118	D-143.06	218	D-143.07	318	D-143.08	418	D-123.05	518	D-123.06	618	D-123.07	718	D-123.08	818	C-200.03	918	C-600.02
019	D-143.05	119	D-143.06	219	D-143.07	319	D-143.08	419	D-123.05	519	D-123.06	619	D-123.07	719	D-123.08	819	C-200.03	919	C-600.02
020	D-143.05	120	D-143.06	220	D-143.07	320	D-143.08	420	D-123.05	520	D-123.06	620	D-123.07	720	D-123.08	820	C-200.03	920	C-600.02
021	D-143.05	121	D-143.06	221	D-143.07	321	D-143.09	421	D-123.05	521	D-123.06	621	D-123.07	721	D-123.08	821	C-200.03	921	C-600.02
022	D-143.05	122	D-143.06	222	D-143.07	322	D-143.09	422	D-123.05	522	D-123.06	622	D-123.07	722	D-123.08	822	C-200.03	922	C-600.02
023	D-143.05	123	D-143.06	223	D-143.07	323	D-143.09	423	D-123.05	523	D-123.06	623	D-123.07	723	D-123.08	823	C-200.03	923	C-600.02
024	D-143.05	124	D-143.06	224	D-143.07	324	D-143.09	424	D-123.05	524	D-123.06	624	D-123.07	724	D-123.08	824	C-200.03	924	C-600.02
025	D-143.05	125	D-143.06	225	D-143.07	325	D-143.09	425	D-123.05	525	D-123.06	625	D-123.07	725	D-123.08	825	C-200.03	925	C-600.02
026	D-143.05	126	D-143.06	226	D-143.07	326	D-143.09	426	D-123.05	526	D-123.06	626	D-123.07	726	D-123.08	826	C-200.03	926	C-600.02
027	D-143.05	127	D-143.06	227	D-143.07	327	D-143.09	427	D-123.05	527	D-123.06	627	D-123.07	727	D-123.08	827	C-200.03	927	C-600.02
028	D-143.05	128	D-143.06	228	D-143.07	328	D-143.09	428	D-123.05	528	D-123.06	628	D-123.07	728	D-123.08	828	C-200.03	928	C-600.02
029	D-143.05	129	D-143.06	229	D-143.07	329	D-143.09	429	D-123.05	529	D-123.06	629	D-123.07	729	D-123.08	829	C-200.03	929	C-400.02
030	D-143.05	130	D-143.06	230	D-143.07	330	D-143.09	430	D-123.05	530	D-123.06	630	D-123.07	730	D-123.09	830	C-200.03	930	C-400.02
031	D-143.05	131	D-143.06	231	D-143.07	331	D-143.09	431	D-123.05	531	D-123.06	631	D-123.07	731	D-123.09	831	C-200.03	931	C-400.02
032	D-143.05	132	D-143.06	232	D-143.07	332	D-143.09	432	D-123.05	532	D-123.06	632	D-123.07	732	D-123.09	832	C-200.03	932	C-400.02
033	D-143.05	133	D-143.06	233	D-143.07	333	D-143.09	433	D-123.05	533	D-123.06	633	D-123.07	733	D-123.09	833	C-200.03	933	C-400.02
034	D-143.05	134	D-143.06	234	D-143.07	334	D-143.09	434	D-123.05	534	D-123.06	634	D-123.07	734	D-123.09	834	C-200.03	934	C-400.02
035	D-143.05	135	D-143.06	235	D-143.07	335	D-143.09	435	D-123.05	535	D-123.06	635	D-123.07	735	D-123.09	835	C-200.03	935	C-400.02
036	D-143.05	136	D-143.06	236	D-143.07	336	D-143.09	436	D-123.05	536	D-123.06	636	D-123.07	736	D-123.09	836	C-200.03	936	C-400.02
037	D-143.05	137	D-143.06	237	D-143.07	337	D-143.09	437	D-123.05	537	D-123.06	637	D-123.07	737	D-123.09	837	C-200.03	937	C-400.02
038	D-143.05	138	D-143.06	238	D-143.07	338	D-143.09	438	D-123.05	538	D-123.06	638	D-123.07	738	D-123.09	838	C-200.03	938	C-400.02
039	D-143.05	139	D-143.06	239	D-143.07	339	D-143.09	439	D-123.05	539	D-123.06	639	D-123.07	739	D-123.09	839	C-200.03	939	C-400.02
040	D-143.05	140	D-143.06	240	D-143.07	340	D-143.09	440	D-123.05	540	D-123.06	640	D-123.07	740	D-123.09	840	C-200.03	940	C-400.02
041	D-143.05	141	D-143.06	241	D-143.07	341	D-143.09	441	D-123.05	541	D-123.06	641	D-123.07	741	D-123.09	841	C-200.03	941	C-400.02
042	D-143.05	142	D-143.06	242	D-143.07	342	D-143.09	442	D-123.05	542	D-123.06	642	D-123.07	742	D-123.09	842	C-200.03	942	C-400.02
043	D-143.05	143	D-143.06	243	D-143.07	343	D-143.09	443	D-123.05	543	D-123.06	643	D-123.07	743	D-123.09	843	C-200.03	943	C-400.02
044	D-143.05	144	D-143.06	244	D-143.07	344	D-143.09	444	D-123.05	544	D-123.06	644	D-123.07	744	D-123.09	844	C-200.03	944	C-400.02
045	D-143.05	145	D-143.06	245	D-143.07	345	D-143.09	445	D-123.05	545	D-123.06	645	D-123.07	745	D-123.09	845	C-200.03	945	C-400.02
046	D-143.05	146	D-143.06	246	D-143.08	346	D-143.09	446	D-123.05	546	D-123.06	646	D-123.07	746	D-123.09	846	C-200.03	946	C-400.02
047	D-143.05	147	D-143.06	247	D-143.08	347	D-143.09	447	D-123.05	547	D-123.06	647	D-123.07	747	D-123.09	847	C-200.03	947	*C-400.02
048	D-143.05	148	D-143.06	248	D-143.08	348	D-143.09	448	D-123.05	548	D-123.06	648	D-123.07	748	D-123.09	848	C-200.03	948	C-400.02
049	D-143.05	149	D-143.06	249	D-143.08	349	D-143.09	449	D-123.05	549	D-123.06	649	D-123.07	749	D-123.09	849	C-200.03	949	C-400.02
050	D-143.05	150	D-143.06	250	D-143.08	350	D-143.09	450	D-123.05	550	D-123.06	650	D-123.07	750	D-123.09	850	C-200.03	950	C-400.02
051	D-143.05	151	D-143.06	251	D-143.08	351	D-143.09	451	D-123.05	551	D-123.06	651	D-123.07	751	D-123.09	851	C-200.03	951	C-400.02
052	D-143.05	152	D-143.06	252	D-143.08	352	D-143.09	452	D-123.05	552	D-123.06	652	D-123.07	752	D-123.09	852	C-200.03	952	C-400.02
053	D-143.05	153	D-143.06	253	D-143.08	353	D-143.09	453	D-123.05	553	D-123.06	653	D-123.07	753	D-123.09	853	C-200.03	953	C-400.02
054	D-143.05	154	D-143.06	254	D-143.08	354	D-143.09	454	D-123.05	554	D-123.06	654	D-123.07	754	D-123.09	854	C-200.03	954	C-400.02
055	D-143.05	155	D-143.06	255	D-143.08	355	D-143.09	455	D-123.05	555	D-123.06	655	D-123.08	755	D-123.09	855	C-600.01	955	C-400.02
056	D-143.05	156	D-143.06	256	D-143.08	356	D-143.09	456	D-123.05	556	D-123 06	656	D-123.08	756	D-123.09	856	C-600.01	956	C-400.02
057	D-143.05	157	D-143.06	257	D-143.08	357	D-143.09	457	D-123.05	557	D-123.06	657	D-123.08	757	D-123.09	857	C-600.01	957	C-400.02
058	D-143.05	158	D-143.07	258	D-143.08	358	D-143.09	458	D-123.05	558	D-123.06	658	D-123.08	758	D-123.09	858	C-600.01	958	C-400.02
059	D-143.05	159	D-143.07	259	D-143.08	359	D-143.09	459	D-123.05	559	D-123.06	659	D-123.08	759	D-123.09	859	C-600.01	959	C-400.02
060	D-143.05	160	D-143.07	260	D-143.08	360	D-143.09	460	D-123.05	560	D-123.06	660	D-123.08	760	D-123.09	860	C-600.01	960	C-400.02
061	D-143.05	161	D-143.07	261	D-143.08	361	D-143.09	461	D-123.05	561	D-123.06	661	D-123.08	761	D-123.09	861	C-600.01	961	C-400.02
062	D-143.05	162	D-143.07	262	D-143.08	362	D-143.09	462	D-123.05	562	D-123.06	662	D-123.08	762	D-123.09	862	C-600.01	962	C-400.02
063	D-143.05	163	D-143.07	263	D-143.08	363	D-143.09	463	D-123.05	563	D-123.06	663	D-123.08	763	D-123.09	863	C-600.01	963	C-400.02
064	D-143.05	164	D-143.07	264	D-143.08	364	D-143.09	464	D-123.05	564	D-123.06	664	D-123.08	764	D-123.09	864	C-600.01	964	C-400.02
065	D-143.05	165	D-143.07	265	D-143.08	365	D-143.09	465	D-123.05	565	D-123.06	665	D-123.08	765	D-123.09	865	C-600.01	965	C-400.02
066	D-143.05	166	D-143.07	266	D-143.08	366	D-143.09	466	D-123.05	566	D-123.06	666	D-123.08	766	D-123.09	866	C-600.01	966	C-400.03
067	D-143.05	167	D-143.07	267	D-143.08	367	D-143.09	467	D-123.05	567	D-123.07	667	D-123.08	767	D-123.09	867	C-600.01	967	C-400.03
068	D-143.05	168	D-143.07	268	D-143.08	368	D-143.09	468	D-123.05	568	D-123.07	668	D-123.08	768	D-123.09	868	C-600.01	968	C-400.03
069	D-143.05	169	D-143.07	269	D-143.08	369	D-143.09	469	D-123.05	569	D-123.07	669	D-123.08	769	D 123.09	879	C-600.01	969	C-400.03
070	D-143.05	170	D-143.07	270	D-143.08	370	D-143.09	470	D-123.05	570	D-123.07	670	D-123.08	770	D-123.09	870	C-600.01	970	C-400.03
071	D-143.05	171	D-143.07	271	D-143.08	371	D-143.09	471	D-123.05	571	D-123.07	671	D-123.08	771	D-123.09	871	C-600.01	971	C-400.03
072	D-143.05	172	D-143.07	272	D-143.08	372	D-143.09	472	D-123.05	572	D-123.07	672	D-123.08	772	D-123.09	872	C-600.01	972	C-400.03
073	D-143.05	173	D-143.07	273	D-143.08	373	D-143.09	473	D-123.05	573	D-123.07	673	D-123.08	773	D-123.09	873	C-600.01	973	C-400.03
074	D-143.05	174	D-143.07	274	D-143.08	374	D-143.09	474	D-123.05	574	D-123.07	674	D-123.08	774	D-123.09	874	C-600.01	974	C-400.03
075	D-143.05	175	D-143.07	275	D-143.08	375	D-143.09	475	D-123.05	575	D-123.07	675	D-123.08	775	D-123.09	875	C-600.01	975	C-400.03
076	D-143.05	176	D-143.07	276	D-143.08	376	D-143.09	476	D-123.05	576	D-123.07	676	D-123.08	776	D-123.09	876	C-600.01	976	C-400.03
077	D-143.05	177	D-143.07	277	D-143.08	377	D-143.09	477	D-123.05	577	D-123.07	677	D-123.08	777	D-123.09	877	C-600.01	977	C-400.03
078	D-143.05	178	D-143.07	278	D-143.08	378	D-143.09	478	D-123.05	578	D-123.07	678	D-123.08	778	D-123.09	878	C-600.01	978	C-400.03
079	D-143.05	179	D-143.07	279	D-143.08	379	D-143.09	479	D-123.05	579	D-123.07	679	D-123.08	779	D-123.09	879	C-600.01	979	C-400.03
080	D-143.05	180	D-143.07	280	D-143.08	380	D-143.09	480	D-123.05	580	D-123.07	680	D-123.08	780	D-123.09	880	C-600.01	980	C-400.03
081	D-143.05	181	D-143.07	281	D-143.08	381	D-143.09	481	D-123.05	581	D-123.07	681	D-123.08	781	D-123.09	881	C-600.01	981	C-400.03
082	D-143.05	182	D-143.07	282	D-143.08	382	D-143.09	482	D-123.05	582	D-123.07	682	D-123.08	782	D-123.09	882	C-600.01	982	C-400.03
083	D-143.06	183	D-143.07	283	D-143.08	383	D-143.09	483	D-123.05	583	D-123.07	683	D-123.08	783	D-123.09	883	C-600.01	983	C-400.03
084	D-143.06	184	D-143.07	284	D-143.08	384	D-143.09	484	D-123.05	584	D-123.07	684	D-123.08	784	D-123.09	884	C-600.01	984	C-400.03
085	D-143.06	185	D-143.07	285	D-143.08	385	D-143.09	485	D-123.05	585	D-123.07	685	D-123.08	785	D-123.09	885	C-600.01	985	C-400.03
086	D-143.06	186	D-143.07	286	D-143.08	386	D-143.09	486	D-123.05	586	D-123.07	686	D-123.08	786	D-123.09	886	C-600.01	986	C-400.03
087	D-143.06	187	D-143.07	287	D-143.08	387	D-143.09	487	D-123.05	587	D-123.07	687	D-123.08	787	D-123.09	887	C-600.01	987	C-400.03
088	D-143.06	188	D-143.07	288	D-143.08	388	D-143.09	488	D-123.05	588	D-123.07	688	D-123.08	788	D-123.09	888	C-600.01	988	C-400.03
089	D-143.06	189	D-143.07	289	D-143.08	389	D-143.09	489	D-123.05	589	D-123.07	689	D-123.08	789	D-123.09	889	C-600.01	989	C-400.03
090	D-143.06	190	D-143.07	290	D-143.08	390	D-143.09	490	D-123.05	590	D-123.07	690	D-123.08	790	D-123.09	890	C-600.01	990	C-400.03
091	D-143.06	191	D-143.07	291	D-143.08	391	D-143.09	491	D-123.05	591	D-123.07	691	D-123.08	791	D-123.09	891	C-600.01	991	C-400.03
092	D-143.06	192	D-143.07	292	D-143.08	392	D-143.09	492	D-123.06	592	D-123.07	692	D-123.08	792	D-123.09	892	C-600.02	992	C-400.03
093	D-143.06	193	D-143.07	293	D-143.08	393	D-143.09	493	D-123.06	593	D-123.07	693	D-123.08	793	D-123.09	893	C-600.02	993	C-400.03
094	D-143.06	194	D-143.07	294	D-143.08	394	D-143.09	494	D-123.06	594	D-123.07	694	D-123.08	794	D-123.09	894	C-600.02	994	C-400.03
095	D-143.06	195	D-143.07	295	D-143.08	395	D-143.09	495	D-123.06	595	D-123.07	695	D-123.08	795	D-123.09	895	C-600.02	995	C-400.03
096	D-143.06	196	D-143.07	296	D-143.08	396	D-143.09	496	D-123.06	596	D-123.07	696	D-123.08	796	D-123.09	896	C-600.02	996	C-400.03
097	D-143.06	197	D-143.07	297	D-143.08	397	D-143.09	497	D-123.06	597	D-123.07	697	D-123.08	797	D-123.09	897	C-600.02	997	C-400.03
098	D-143.06	198	D-143.07	298	D-143.08	398	D-143.09	498	D-123.06	598	D-123.07	698	D-123.08	798	D-123.09	898	C-600.02	998	C-400.03
099	D-143.06	199	D-143.07	299	D-143.08	399	D-143.09	499	D-123.06	599	D-123.07	699	D-123.08	799	D-123.09	899	C-600.02	999	C-400.03

FORD MOTOR COMPANY
STANDARD PARTS

INDEX

THE TWO NUMBERS AT THE TOP OF THE NO. COLUMN ARE THE FIRST DIGITS OF THE FIVE DIGIT NUMBER AND FOLLOWING NUMBERS IN THE COLUMN ARE THE LAST THREE DIGITS OF THE FIVE DIGIT NUMBER.

No.	Page	No.	Page	No.	Page	No.	Page	No.	Page	No.	Page	No.	Page	No.	Page	No.	Page	No.	Page
54		54		54		54		54		54		54		54		54		54	
000	C-400.03	100	C-200.12	200	C-600.12	300	C-500.02	400	C-500.13	500	C-450.14	600	C-312.14	700	C-310.01	800	C-310.01	900	C-310.12
001	C-400.03	101	C-200.12	201	C-600.12	301	C-500.02	401	C-500.13	501	C-450.14	601	C-312.14	701	C-310.01	801	C-310.01	901	C-310.12
002	C-400.03	102	C-200.12	202	C-600.12	302	C-500.02	402	C-500.13	502	C-450.14	602	C-312.14	702	C-310.01	802	C-310.01	902	C-310.12
003	C-400.12	103	C-200.12	203	C-600.12	303	C-500.02	403	C-500.13	503	C-550.16	603	C-601.13	703	C-310.01	803	C-310.01	903	C-310.12
004	C-400.12	104	C-200.12	204	C-600.12	304	C-500.02	404	C-500.13	504	C-550.16	604	C-601.13	704	C-310.01	804	C-310.01	904	C-310.12
005	C-400.12	105	C-200.12	205	C-600.12	305	C-500.02	405	C-500.13	505	C-550.16	605	C-601.13	705	C-310.01	805	C-310.01	905	C-310.12
006	C-400.12	106	C-200.12	206	C-600.12	306	C-500.02	406	C-500.13	506	C-550.16	606	C-601.13	706	C-310.01	806	C-310.01	906	C-310.12
007	C-400.12	107	C-200.12	207	C-600.12	307	C-500.03	407	C-500.13	507	C-550.16	607	C-601.13	707	C-310.01	807	C-310.01	907	C-310.12
008	C-400.12	108	C-200.12	208	C-600.12	308	C-500.03	408	C-500.13	508	C-550.16	608	C-601.13	708	C-310.01	808	C-310.01	908	C-310.12
009	C-400.12	109	C-200.12	209	C-600.12	309	C-500.03	409	C-500.13	509	C-550.16	609	C-601.13	709	C-310.01	809	C-310.01	909	C-310.12
010	C-400.12	110	C-200.12	210	C-600.12	310	C-500.03	410	C-500.13	510	C-550.16	610	C-601.13	710	C-310.01	810	C-310.01	910	C-310.12
011	C-400.12	111	C-200.12	211	C-600.12	311	C-500.03	411	C-500.13	511	C-550.16	611	C-310.01	711	C-310.01	811	C-310.01	911	C-310.12
012	C-400.12	112	C-200.12	212	C-600.12	312	C-500.03	412	C-500.13	512	C-550.16	612	C-310.01	712	C-310.01	812	C-310.01	912	C-310.12
013	C-400.12	113	C-200.12	213	C-600.12	313	C-500.03	413	C-500.13	513	C-550.16	613	C-310.01	713	C-310.01	813	C-310.01	913	C-310.12
014	C-400.12	114	C-200.12	214	C-600.12	314	C-500.03	414	C-500.13	514	C-550.16	614	C-310.01	714	C-310.01	814	C-310.01	914	C-310.12
015	C-400.12	115	C-200.12	215	C-600.12	315	C-500.03	415	C-500.13	515	C-550.16	615	C-310.01	715	C-310.01	815	C-310.01	915	C-310.12
016	C-400.12	116	C-200.13	216	C-600.12	316	C-500.03	416	C-500.13	516	C-652.17	616	C-310.01	716	C-310.01	816	C-310.01	916	C-310.12
017	C-400.12	117	C-200.13	217	C-600.12	317	C-500.03	417	C-500.13	517	C-652.17	617	C-310.01	717	C-310.01	817	C-310.01	917	C-310.12
018	C-400.12	118	C-200.13	218	C-600.12	318	C-500.03	418	C-602.14	518	C-652.17	618	C-310.01	718	C-310.01	818	C-310.01	918	C-310.12
019	C-400.12	119	C-200.13	219	C-600.12	319	C-500.03	419	C-602.14	519	C-652.17	619	C-310.01	719	C-310.01	819	C-310.01	919	C-310.12
020	C-400.12	120	C-200.13	220	C-600.12	320	C-500.03	420	C-602.14	520	C-652.17	620	C-310.01	720	C-310.01	820	C-310.01	920	C-310.12
021	C-400.12	121	C-200.13	221	C-600.12	321	C-500.03	421	C-602.14	521	C-652.17	621	C-310.01	721	C-310.01	821	C-310.01	921	C-310.12
022	C-400.12	122	C-200.13	222	C-600.12	322	C-500.03	422	C-602.14	522	C-652.17	622	C-310.01	722	C-310.01	822	C-310.01	922	C-310.12
023	C-400.12	123	C-200.13	223	C-600.12	323	C-500.03	423	C-602.14	523	C-652.17	623	C-310.01	723	C-310.01	823	C-310.01	923	C-310.12
024	C-400.12	124	C-200.13	224	C-600.12	324	C-500.03	424	C-602.14	524	C-652.17	624	C-310.01	724	C-310.01	824	C-310.01	924	C-310.12
025	C-400.12	125	C-200.13	225	C-600.12	325	C-500.03	425	C-602.14	525	C-452.15	625	C-310.01	725	C-310.01	825	C-310.01	925	C-310.12
026	C-400.12	126	C-200.13	226	C-600.12	326	C-500.03	426	C-602.14	526	C-452.15	626	C-310.01	726	C-310.01	826	C-310.01	926	C-310.12
027	C-400.12	127	C-200.13	227	C-100.12	327	C-500.03	427	C-101.11	527	C-452.15	627	C-310.01	727	C-310.01	827	C-310.01	927	C-310.12
028	C-400.12	128	C-200.13	228	C-100.12	328	C-500.03	428	C-101.11	528	C-452.15	628	C-310.01	728	C-310.01	828	C-310.01	928	C-310.12
029	C-400.12	129	C-200.13	229	C-100.12	329	C-500.03	429	C-101.11	529	C-452.15	629	C-310.01	729	C-310.01	829	C-310.01	929	C-310.12
030	C-400.12	130	C-200.13	230	C-100.12	330	C-500.03	430	C-101.11	530	C-452.15	630	C-310.01	730	C-310.01	830	C-310.01	930	C-310.12
031	C-400.12	131	C-200.13	231	C-100.12	331	C-500.03	431	C-101.11	531	C-452.15	631	C-310.01	731	C-310.01	831	C-310.01	931	C-310.12
032	C-400.12	132	C-200.13	232	C-100.12	332	C-500.03	432	C-101.11	532	C-452.15	632	C-310.01	732	C-310.01	832	C-310.01	932	C-310.12
033	C-400.12	133	C-200.13	233	C-100.12	333	C-500.03	433	C-101.11	533	C-153.13	633	C-310.01	733	C-310.01	833	C-310.01	933	C-310.12
034	C-400.12	134	C-200.13	234	C-100.12	334	C-500.03	434	C-101.11	534	C-153.13	634	C-310.01	734	C-310.01	834	C-310.01	934	C-310.12
035	C-400.12	135	C-200.13	235	C-100.12	335	C-500.03	435	C-101.11	535	C-153.13	635	C-310.01	735	C-310.01	835	C-310.01	935	C-310.12
036	C-400.12	136	C-200.13	236	C-100.12	336	C-500.03	436	C-501.14	536	C-153.13	636	C-310.01	736	C-310.01	836	C-310.01	936	C-310.12
037	C-100.01	137	C-200.13	237	C-100.12	337	C-500.03	437	C-501.14	537	C-153.13	637	C-310.01	737	C-310.01	837	C-310.01	937	C-310.12
038	C-100.01	138	C-200.13	238	C-100.12	338	C-500.03	438	C-501.14	538	C-153.13	638	C-310.01	738	C-310.01	838	C-310.01	938	C-310.12
039	C-100.01	139	C-200.13	239	C-100.12	339	C-500.03	439	C-501.14	539	C-552.18	639	C-310.01	739	C-310.01	839	C-310.01	939	C-310.12
040	C-100.01	140	C-200.13	240	C-100.12	340	C-500.03	440	C-501.14	540	C-552.18	640	C-310.01	740	C-310.01	840	C-310.01	940	C-310.12
041	C-100.01	141	C-200.13	241	C-100.12	341	C-500.03	441	C-501.14	541	C-552.18	641	C-310.01	741	C-310.01	841	C-310.01	941	C-310.12
042	C-100.01	142	C-200.13	242	C-100.12	342	C-500.03	442	C-501.14	542	C-552.18	642	C-310.01	742	C-310.01	842	C-310.01	942	C-310.12
043	C-100.01	143	C-200.13	243	C-100.12	343	C-500.03	443	C-501.14	543	C-552.18	643	C-310.01	743	C-310.01	843	C-310.01	943	C-310.12
044	C-100.01	144	C-200.13	244	C-100.12	344	C-500.12	444	C-501.14	544	C-552.18	644	C-310.01	744	C-310.01	844	C-310.01	944	C-310.12
045	C-100.01	145	C-200.13	245	C-100.12	345	C-500.12	445	C-311.13	545	C-552.18	645	C-310.01	745	C-310.01	845	C-310.01	945	C-310.12
046	C-100.01	146	C-200.13	246	C-100.12	346	C-500.12	446	C-311.13	546	C-552.18	646	C-310.01	746	C-310.01	846	C-310.01	946	C-310.12
047	C-100.01	147	C-200.13	247	C-100.12	347	C-500.12	447	C-311.13	547	C-552.18	647	C-310.01	747	C-310.01	847	C-310.01	947	C-310.12
048	C-100.01	148	C-200.13	248	C-100.12	348	C-500.12	448	C-311.13	548	C-552.18	648	C-310.01	748	C-310.01	848	C-310.01	948	C-310.12
049	C-100.01	149	C-200.13	249	C-100.12	349	C-500.12	449	C-311.13	549	C-651.16	649	C-310.01	749	C-310.01	849	C-310.01	949	C-310.12
050	C-100.01	150	C-200.13	250	C-100.12	350	C-500.12	450	C-311.13	550	C-651.16	650	C-310.01	750	C-310.01	850	C-310.01	950	C-310.12
051	C-100.01	151	C-200.13	251	C-100.12	351	C-500.12	451	C-311.13	551	C-651.16	651	C-310.01	751	C-310.01	851	C-310.01	951	C-310.12
052	C-100.01	152	C-200.13	252	C-100.12	352	C-500.12	452	C-250.14	552	C-651.16	652	C-310.01	752	C-310.01	852	C-310.01	952	C-310.12
053	C-100.01	153	C-600.11	253	C-100.12	353	C-500.12	453	C-250.14	553	C-651.16	653	C-310.01	753	C-310.01	853	C-310.12	953	C-310.12
054	C-100.01	154	C-600.11	254	C-100.12	354	C-500.12	454	C-250.14	554	C-651.16	654	C-310.01	754	C-310.01	854	C-310.12	954	C-310.12
055	C-100.01	155	C-600.11	255	C-100.12	355	C-500.12	455	C-250.14	555	C-651.16	655	C-310.01	755	C-310.01	855	C-310.12	955	C-310.12
056	C-100.01	156	C-600.11	256	C-100.12	356	C-500.12	456	C-250.14	556	C-151.12	656	C-310.01	756	C-310.01	856	C-310.12	956	C-310.12
057	C-100.01	157	C-600.11	257	C-100.12	357	C-500.12	457	C-250.14	557	C-151.12	657	C-310.01	757	C-310.01	857	C-310.12	957	C-310.12
058	C-100.01	158	C-600.11	258	C-100.12	358	C-500.12	458	C-250.14	558	C-151.12	658	C-310.01	758	C-310.01	858	C-310.12	958	C-310.12
059	C-100.01	159	C-600.11	259	C-100.12	359	C-500.12	459	C-250.14	559	C-151.12	659	C-310.01	759	C-310.01	859	C-310.12	959	C-310.12
060	C-100.01	160	C-600.11	260	C-100.12	360	C-500.12	460	C-250.14	560	C-151.12	660	C-310.01	760	C-310.01	860	C-310.12	960	C-310.12
061	C-100.01	161	C-600.11	261	C-100.12	361	C-500.12	461	C-250.14	561	C-151.12	661	C-310.01	761	C-310.01	861	C-310.12	961	C-310.12
062	C-100.01	162	C-600.11	262	C-100.12	362	C-500.12	462	C-250.14	562	C-151.12	662	C-310.01	762	C-310.01	862	C-310.12	962	C-310.12
063	C-100.01	163	C-600.11	263	C-100.12	363	C-500.12	463	C-250.14	563	C-551.17	663	C-310.01	763	C-310.01	863	C-310.12	963	C-310.12
064	C-100.01	164	C-600.11	264	C-100.12	364	C-500.12	464	C-250.14	564	C-551.17	664	C-310.01	764	C-310.01	864	C-310.12	964	C-310.12
065	C-100.01	165	C-600.11	265	C-100.12	365	C-500.12	465	C-150.11	565	C-551.17	665	C-310.01	765	C-310.01	865	C-310.12	965	C-310.12
066	C-100.01	166	C-600.11	266	C-100.12	366	C-500.12	466	C-150.11	566	C-551.17	666	C-310.01	766	C-310.01	866	C-310.12	966	C-310.12
067	C-100.01	167	C-600.11	267	C-100.12	367	C-500.12	467	C-150.11	567	C-551.17	667	C-310.01	767	C-310.01	867	C-310.12	967	C-310.12
068	C-100.01	168	C-600.11	268	C-100.12	368	C-500.12	468	C-150.11	568	C-551.17	668	C-310.01	768	C-310.01	868	C-310.12	968	C-310.12
069	C-100.01	169	C-600.11	269	C-100.12	369	C-500.12	469	C-150.11	569	C-551.17	669	C-310.01	769	C-310.01	879	C-310.12	969	C-310.12
070	C-100.01	170	C-600.11	270	C-500.02	370	C-500.12	470	C-150.11	570	C-551.17	670	C-310.01	770	C-310.01	870	C-310.12	970	C-310.12
071	C-100.01	171	C-600.11	271	C-500.02	371	C-500.12	471	C-150.11	571	C-551.17	671	C-310.01	771	C-310.01	871	C-310.12	971	C-310.12
072	C-100.01	172	C-600.11	272	C-500.02	372	C-500.12	472	C-150.11	572	C-402.13	672	C-310.01	772	C-310.01	872	C-310.12	972	C-310.12
073	C-100.01	173	C-600.11	273	C-500.02	373	C-500.12	473	C-150.11	573	C-402.13	673	C-310.01	773	C-310.01	873	C-310.12	973	C-310.12
074	C-100.01	174	C-600.11	274	C-500.02	374	C-500.12	474	C-150.11	574	C-402.13	674	C-310.01	774	C-310.01	874	C-310.12	974	C-310.12
075	C-100.01	175	C-600.11	275	C-500.02	375	C-500.12	475	C-150.11	575	C-402.13	675	C-310.01	775	C-310.01	875	C-310.12	975	C-310.12
076	C-100.01	176	C-600.11	276	C-500.02	376	C-500.12	476	C-150.11	576	C-402.13	676	C-310.01	776	C-310.01	876	C-310.12	976	C-310.12
077	C-100.01	177	C-600.11	277	C-500.02	377	C-500.12	477	C-150.11	577	C-402.13	677	C-310.01	777	C-310.01	877	C-310.12	977	C-310.12
078	C-100.01	178	C-600.11	278	C-500.02	378	C-500.12	478	C-650.15	578	C-402.13	678	C-310.01	778	C-310.01	878	C-310.12	978	C-310.12
079	C-200.12	179	C-600.11	279	C-500.02	379	C-500.12	479	C-650.15	579	C-103.12	679	C-310.01	779	C-310.01	879	C-310.12	979	C-310.12
080	C-200.12	180	C-600.11	280	C-500.02	380	C-500.12	480	C-650.15	580	C-103.12	680	C-310.01	780	C-310.01	880	C-310.12	980	C-310.12
081	C-200.12	181	C-600.11	281	C-500.02	381	C-500.13	481	C-650.15	581	C-103.12	681	C-310.01	781	C-310.01	881	C-310.12	981	C-310.12
082	C-200.12	182	C-600.11	282	C-500.02	382	C-500.13	482	C-650.15	582	C-103.12	682	C-310.01	782	C-310.01	882	C-310.12	982	C-310.12
083	C-200.12	183	C-600.11	283	C-500.02	383	C-500.13	483	C-650.15	583	C-103.12	683	C-310.01	783	C-310.01	883	C-310.12	983	C-310.12
084	C-200.12	184	C-600.11	284	C-500.02	384	C-500.13	484	C-650.15	584	C-103.12	684	C-310.01	784	C-310.01	884	C-310.12	984	C-310.12
085	C-200.12	185	C-600.11	285	C-500.02	385	C-500.13	485	C-650.15	585	C-103.12	685	C-310.01	785	C-310.01	885	C-310.12	985	C-310.12
086	C-200.12	186	C-600.11	286	C-500.02	386	C-500.13	486	C-650.15	586	C-502.15	686	C-310.01	786	C-310.01	886	C-310.12	986	C-310.12
087	C-200.12	187	C-600.11	287	C-500.02	387	C-500.13	487	C-650.15	587	C-502.15	687	C-310.01	787	C-310.01	887	C-310.12	987	C-310.12
088	C-200.12	188	C-600.11	288	C-500.02	388	C-500.13	488	C-650.15	588	C-502.15	688	C-310.01	788	C-310.01	888	C-310.12	988	C-310.12
089	C-200.12	189	C-600.11	289	C-500.02	389	C-500.13	489	C-650.15	589	C-502.15	689	C-310.01	789	C-310.01	889	C-310.12	989	C-310.12
090	C-200.12	190	C-600.12	290	C-500.02	390	C-500.13	490	C-650.15	590	C-502.15	690	C-310.01	790	C-310.01	890	C-310.12	990	C-310.12
091	C-200.12	191	C-600.12	291	C-500.02	391	C-500.13	491	C-650.15	591	C-502.15	691	C-310.01	791	C-310.01	891	C-310.12	991	C-310.12
092	C-200.12	192	C-600.12	292	C-500.02	392	C-500.13	492	C-450.14	592	C-502.15	692	C-310.01	792	C-310.01	892	C-310.12	992	C-310.12
093	C-200.12	193	C-600.12	293	C-500.02	393	C-500.13	493	C-450.14	593	C-502.15	693	C-310.01	793	C-310.01	893	C-310.12	993	C-310.12
094	C-200.12	194	C-600.12	294	C-500.02	394	C-500.13	494	C-450.14	594	C-312.14	694	C-310.01	794	C-310.01	894	C-310.12	994	C-310.12
095	C-200.12	195	C-600.12	295	C-500.02	395	C-500.13	495	C-450.14	595	C-312.14	695	C-310.01	795	C-310.01	895	C-310.12	995	C-310.12
096	C-200.12	196	C-600.12	296	C-500.02	396	C-500.13	496	C-450.14	596	C-312.14	696	C-310.01	796	C-310.01	896	C-310.12	996	C-310.12
097	C-200.12	197	C-600.12	297	C-500.02	397	C-500.13	497	C-450.14	597	C-312.14	697	C-310.01	797	C-310.01	897	C-310.12	997	C-310.12
098	C-200.12	198	C-600.12	298	C-500.02	398	C-500.13	498	C-450.14	598	C-312.14	698	C-310.01	798	C-310.01	898	C-310.12	998	C-310.12
099	C-200.12	199	C-600.12	299	C-500.02	399	C-500.13	499	C-450.14	599	C-312.14	699	C-310.01	799	C-310.01	899	C-310.12	999	C-310.12

FORD MOTOR COMPANY
STANDARD PARTS

INDEX

THE TWO NUMBERS AT THE TOP OF THE NO. COLUMN ARE THE FIRST DIGITS OF THE FIVE DIGIT NUMBER AND FOLLOWING NUMBERS IN THE COLUMN ARE THE LAST THREE DIGITS OF THE FIVE DIGIT NUMBER.

No.	Page	No.	Page	No.	Page	No.	Page	No.	Page	No.	Page	No.	Page	No.	Page	No.	Page	No.	Page
55		55		55		55		55		55		55		55		55		55	
000	C-310.12	100	C-360.01	200	C-360.01	300	C-360.01	400	C-360.12	500	C-360.12	600	C-361.11	700	E-135.06	800	E-135.07	900	
001	C-310.12	101	C-360.01	201	C-360.01	301	C-360.01	401	C-360.12	501	C-360.12	601	C-361.11	701	E-135.06	801	E-135.07	901	
002	C-310.12	102	C-360.01	202	C-360.01	302	C-360.01	402	C-360.12	502	C-360.12	602	C-361.11	702	E-135.06	802	E-135.07	902	
003	C-310.12	103	C-360.01	203	C-360.01	303	C-360.01	403	C-360.12	503	C-360.12	603	C-361.11	703	E-135.06	803	E-135.07	903	
004	C-310.12	104	C-360.01	204	C-360.01	304	C-360.01	404	C-360.12	504	C-360.12	604	C-361.11	704	E-135.06	804	E-135.07	904	
005	C-310.12	105	C-360.01	205	C-360.01	305	C-360.01	405	C-360.12	505	C-360.12	605	C-361.11	705	E-135.06	805	E-135.07	905	
006	C-310.12	106	C-360.01	206	C-360.01	306	C-360.01	406	C-360.12	506	C-360.12	606	C-361.11	706	E-135.06	806	E-135.07	906	
007	C-310.12	107	C-360.01	207	C-360.01	307	C-360.01	407	C-360.12	507	C-360.12	607	C-361.11	707	E-135.06	807	E-135.07	907	
008	C-310.12	108	C-360.01	208	C-360.01	308	C-360.01	408	C-360.12	508	C-360.12	608	C-361.11	708	E-135.06	808	E-135.07	908	
009	C-310.12	109	C-360.01	209	C-360.01	309	C-360.01	409	C-360.12	509	C-360.12	609	C-361.11	709	E-135.06	809	E-135.07	909	
010	C-310.12	110	C-360.01	210	C-360.01	310	C-360.01	410	C-360.12	510	C-360.12	610	C-361.11	710	E-135.06	810	E-135.07	910	
011	C-310.12	111	C-360.01	211	C-360.01	311	C-360.01	411	C-360.12	511	C-360.12	611	C-361.11	711	E-135.06	811	E-135.07	911	
012	C-310.12	112	C-360.01	212	C-360.01	312	C-360.01	412	C-360.12	512	C-360.12	612	C-361.11	712	E-135.06	812	E-135.07	912	
013	C-310.12	113	C-360.01	213	C-360.01	313	C-360.01	413	C-360.12	513	C-360.12	613	C-361.11	713	E-135.06	813	E-135.07	913	
014	C-310.12	114	C-360.01	214	C-360.01	314	C-360.01	414	C-360.12	514	C-360.12	614	C-361.11	714	E-135.06	814	E-135.07	914	
015	C-310.12	115	C-360.01	215	C-360.01	315	C-360.01	415	C-360.12	515	C-360.12	615	C-361.11	715	E-135.06	815	E-135.07	915	
016	C-310.12	116	C-360.01	216	C-360.01	316	C-360.01	416	C-360.12	516	C-360.12	616	C-361.11	716	E-135.06	816	E-135.07	916	
017	C-310.12	117	C-360.01	217	C-360.01	317	C-360.01	417	C-360.12	517	C-360.12	617	C-361.11	717	E-135.06	817	E-135.07	917	
018	C-310.12	118	C-360.01	218	C-360.01	318	C-360.01	418	C-360.12	518	C-360.12	618	C-361.11	718	E-135.06	818	E-135.07	918	
019	C-310.12	119	C-360.01	219	C-360.01	319	C-360.01	419	C-360.12	519	C-360.12	619	C-361.11	719	E-135.06	819	E-135.07	919	
020	C-310.12	120	C-360.01	220	C-360.01	320	C-360.01	420	C-360.12	520	C-360.12	620	C-361.11	720	E-135.06	820	E-135.07	920	
021	C-310.12	121	C-360.01	221	C-360.01	321	C-360.01	421	C-360.12	521	C-360.12	621	C-361.11	721	E-135.06	821	E-135.07	921	
022	C-310.12	122	C-360.01	222	C-360.01	322	C-360.01	422	C-360.12	522	C-360.12	622	C-361.11	722	E-135.06	822	E-135.07	922	
023	C-310.12	123	C-360.01	223	C-360.01	323	C-360.01	423	C-360.12	523	C-360.12	623	C-361.11	723	E-135.06	823	E-135.07	923	
024	C-310.12	124	C-360.01	224	C-360.01	324	C-360.01	424	C-360.12	524	C-360.12	624	C-361.11	724	E-135.06	824	E-135.07	924	
025	C-310.12	125	C-360.01	225	C-360.01	325	C-360.01	425	C-360.12	525	C-360.12	625	C-361.11	725	E-135.06	825	E-135.07	925	
026	C-310.12	126	C-360.01	226	C-360.01	326	C-360.01	426	C-360.12	526	C-360.12	626	C-361.11	726	E-135.06	826	E-135.07	926	
027	C-310.12	127	C-360.01	227	C-360.01	327	C-360.01	427	C-360.12	527	C-360.12	627	C-361.11	727	E-135.06	827	E-135.07	927	
028	C-310.12	128	C-360.01	228	C-360.01	328	C-360.01	428	C-360.12	528	C-360.12	628	C-361.11	728	E-135.06	828	E-135.07	928	
029	C-310.12	129	C-360.01	229	C-360.01	329	C-360.01	429	C-360.12	529	C-360.12	629	C-361.11	729	E-135.03	829	E-135.07	929	
030	C-310.12	130	C-360.01	230	C-360.01	330	C-360.01	430	C-360.12	530	C-360.12	630	C-361.11	730	E-135.03	830	E-135.07	930	
031	C-310.12	131	C-360.01	231	C-360.01	331	C-360.01	431	C-360.12	531	C-360.12	631	C-361.11	731	E-135.03	831	E-135.07	931	
032	C-310.12	132	C-360.01	232	C-360.01	332	C-360.01	432	C-360.12	532	C-360.12	632	C-361.11	732	E-135.03	832	E-135.07	932	
033	C-310.12	133	C-360.01	233	C-360.01	333	C-360.01	433	C-360.12	533	C-360.12	633	C-361.11	733	E-135.03	833	E-135.07	933	
034	C-310.12	134	C-360.01	234	C-360.01	334	C-360.01	434	C-360.12	534	C-360.12	634	C-361.11	734	E-135.04	834	E-135.07	934	
035	C-310.12	135	C-360.01	235	C-360.01	335	C-360.01	435	C-360.12	535	C-360.12	635	C-361.11	735	E-135.04	835	E-135.07	935	
036	C-310.12	136	C-360.01	236	C-360.01	336	C-360.01	436	C-360.12	536	C-360.12	636	C-361.11	736	E-135.04	836	E-135.07	936	
037	C-310.12	137	C-360.01	237	C-360.01	337	C-360.12	437	C-360.12	537	C-360.12	637	C-361.11	737	E-135.04	837	E-135.07	937	
038	C-310.12	138	C-360.01	238	C-360.01	338	C-360.12	438	C-360.12	538	C-360.12	638	C-361.11	738	E-135.04	838	E-135.07	938	
039	C-310.12	139	C-360.01	239	C-360.01	339	C-360.12	439	C-360.12	539	C-360.12	639	C-361.11	739	E-135.04	839	E-135.07	939	
040	C-310.12	140	C-360.01	240	C-360.01	340	C-360.12	440	C-360.12	540	C-360.12	640	C-361.11	740	E-135.04	840	E-135.07	940	
041	C-310.12	141	C-360.01	241	C-360.01	341	C-360.12	441	C-360.12	541	C-360.12	641	C-361.11	741	E-135.04	841	E-135.07	941	
042	C-310.12	142	C-360.01	242	C-360.01	342	C-360.12	442	C-360.12	542	C-360.12	642	C-361.11	742	E-135.04	842	E-135.07	942	
043	C-310.12	143	C-360.01	243	C-360.01	343	C-360.12	443	C-360.12	543	C-360.12	643	C-361.11	743	E-135.04	843	E-135.07	943	
044	C-310.12	144	C-360.01	244	C-360.01	344	C-360.12	444	C-360.12	544	C-360.12	644	C-361.11	744		844	E-135.07	944	
045	C-310.12	145	C-360.01	245	C-360.01	345	C-360.12	445	C-360.12	545	C-360.12	645	C-361.11	745		845	E-135.07	945	
046	C-310.12	146	C-360.01	246	C-360.01	346	C-360.12	446	C-360.12	546	C-360.12	646	C-361.11	746		846	E-135.07	946	
047	C-310.12	147	C-360.01	247	C-360.01	347	C-360.12	447	C-360.12	547	C-360.12	647	C-361.11	747		847	E-135.07	947	
048	C-310.12	148	C-360.01	248	C-360.01	348	C-360.12	448	C-360.12	548	C-360.12	648	C-361.11	748	E-135.05	848	E-135.07	948	
049	C-310.12	149	C-360.01	249	C-360.01	349	C-360.12	449	C-360.12	549	C-360.12	649	C-361.11	749	E-135.05	849	E-135.07	949	
050	C-310.12	150	C-360.01	250	C-360.01	350	C-360.12	450	C-360.12	550	C-360.12	650	C-361.11	750	E-135.05	850	E-135.07	950	
051	C-310.12	151	C-360.01	251	C-360.01	351	C-360.12	451	C-360.12	551	C-360.12	651	C-361.11	751	E-135.05	851	E-135.07	951	
052	C-310.12	152	C-360.01	252	C-360.01	352	C-360.12	452	C-360.12	552	C-360.12	652	C-361.11	752	E-135.05	852	E-135.07	952	
053	C-310.12	153	C-360.01	253	C-360.01	353	C-360.12	453	C-360.12	553	C-360.12	653	C-361.11	753	E-135.05	853	E-135.07	953	
054	C-310.12	154	C-360.01	254	C-360.01	354	C-360.12	454	C-360.12	554	C-360.12	654	C-361.11	754	E-135.05	854	E-135.07	954	
055	C-310.12	155	C-360.01	255	C-360.01	355	C-360.12	455	C-360.12	555	C-360.12	655	C-361.11	755	E-135.05	855	E-135.07	955	
056	C-310.12	156	C-360.01	256	C-360.01	356	C-360.12	456	C-360.12	556	C-360.12	656	C-361.11	756	E-135.05	856	E-135.07	956	
057	C-310.12	157	C-360.01	257	C-360.01	357	C-360.12	457	C-360.12	557	C-360.12	657	C-361.11	757	E-135.05	857	E-135.07	957	
058	C-310.12	158	C-360.01	258	C-360.01	358	C-360.12	458	C-360.12	558	C-360.12	658	C-361.11	758	E-135.05	858	E-135.07	958	
059	C-310.12	159	C-360.01	259	C-360.01	359	C-360.12	459	C-360.12	559	C-360.12	659	C-361.11	759	E-135.05	859	E-135.07	959	
060	C-310.12	160	C-360.01	260	C-360.01	360	C-360.12	460	C-360.12	560	C-360.12	660	C-361.11	760	E-135.05	860		960	
061	C-310.12	161	C-360.01	261	C-360.01	361	C-360.12	461	C-360.12	561	C-360.12	661	C-361.11	761	E-135.05	861		961	
062	C-310.12	162	C-360.01	262	C-360.01	362	C-360.12	462	C-360.12	562	C-360.12	662	C-361.11	762	E-135.05	862		962	
063	C-310.12	163	C-360.01	263	C-360.01	363	C-360.12	463	C-360.12	563	C-360.12	663	C-361.11	763	E-135.05	863		963	
064	C-310.12	164	C-360.01	264	C-360.01	364	C-360.12	464	C-360.12	564	C-360.12	664	C-361.11	764	E-136.02	864		964	
065	C-310.12	165	C-360.01	265	C-360.01	365	C-360.12	465	C-360.12	565	C-360.12	665	C-361.11	765	E-136.02	865		965	
066	C-310.12	166	C-360.01	266	C-360.01	366	C-360.12	466	C-360.12	566	C-360.12	666	C-361.11	766	E-136.02	866		966	
067	C-310.12	167	C-360.01	267	C-360.01	367	C-360.12	467	C-360.12	567	C-360.12	667	C-361.11	767	E-136.02	867		967	
068	C-310.12	168	C-360.01	268	C-360.01	368	C-360.12	468	C-360.12	568	C-360.12	668	C-361.11	768	E-136.02	868		968	
069	C-310.12	169	C-360.01	269	C-360.01	369	C-360.12	469	C-360.12	569	C-360.12	669	E-135.06	769	E-136.02	879		969	
070	C-310.12	170	C-360.01	270	C-360.01	370	C-360.12	470	C-360.12	570	C-360.12	670	E-135.06	770	E-136.02	870		970	
071	C-310.12	171	C-360.01	271	C-360.01	371	C-360.12	471	C-360.12	571	C-360.12	671	E-135.06	771	E-136.02	871		971	
072	C-310.12	172	C-360.01	272	C-360.01	372	C-360.12	472	C-360.12	572	C-360.12	672	E-135.06	772	E-136.02	872		972	
073	C-310.12	173	C-360.01	273	C-360.01	373	C-360.12	473	C-360.12	573	C-360.12	673	E-135.06	773	E-136.02	873		973	
074	C-310.12	174	C-360.01	274	C-360.01	374	C-360.12	474	C-360.12	574	C-360.12	674	E-135.06	774	E-136.02	874		974	
075	C-310.12	175	C-360.01	275	C-360.01	375	C-360.12	475	C-360.12	575	C-360.12	675	E-135.06	775	E-136.02	875		975	
076	C-310.12	176	C-360.01	276	C-360.01	376	C-360.12	476	C-360.12	576	C-360.12	676	E-135.06	776	E-136.02	876		976	
077	C-310.12	177	C-360.01	277	C-360.01	377	C-360.12	477	C-360.12	577	C-360.12	677	E-135.06	777	E-136.02	877		977	
078	C-310.12	178	C-360.01	278	C-360.01	378	C-360.12	478	C-360.12	578	C-360.12	678	E-135.06	778	E-136.02	878		978	
079	C-310.12	179	C-360.01	279	C-360.01	379	C-360.12	479	C-360.12	579	C-361.11	679	E-135.06	779	E-136.02	879		979	
080	C-310.12	180	C-360.01	280	C-360.01	380	C-360.12	480	C-360.12	580	C-361.11	680	E-135.06	780	E-136.02	880		980	
081	C-310.12	181	C-360.01	281	C-360.01	381	C-360.12	481	C-360.12	581	C-361.11	681	E-135.06	781	E-136.02	881		981	
082	C-310.12	182	C-360.01	282	C-360.01	382	C-360.12	482	C-360.12	582	C-361.11	682	E-135.06	782	E-136.02	882		982	
083	C-310.12	183	C-360.01	283	C-360.01	383	C-360.12	483	C-360.12	583	C-361.11	683	E-135.06	783	E-136.02	883		983	
084	C-310.12	184	C-360.01	284	C-360.01	384	C-360.12	484	C-360.12	584	C-361.11	684	E-135.06	784		884		984	
085	C-310.12	185	C-360.01	285	C-360.01	385	C-360.12	485	C-360.12	585	C-361.11	685	E-135.06	785		885		985	
086	C-310.12	186	C-360.01	286	C-360.01	386	C-360.12	486	C-360.12	586	C-361.11	686	E-135.06	786		886		986	
087	C-310.12	187	C-360.01	287	C-360.01	387	C-360.12	487	C-360.12	587	C-361.11	687	E-135.06	787		887		987	
088	C-310.12	188	C-360.01	288	C-360.01	388	C-360.12	488	C-360.12	588	C-361.11	688	E-135.06	788		888		988	
089	C-310.12	189	C-360.01	289	C-360.01	389	C-360.12	489	C-360.12	589	C-361.11	689	E-135.06	789		889		989	
090	C-310.12	190	C-360.01	290	C-360.01	390	C-360.12	490	C-360.12	590	C-361.11	690	E-135.06	790		890		990	
091	C-310.12	191	C-360.01	291	C-360.01	391	C-360.12	491	C-360.12	591	C-361.11	691	E-135.06	791		891		991	
092	C-310.12	192	C-360.01	292	C-360.01	392	C-360.12	492	C-360.12	592	C-361.11	692	E-135.06	792		892		992	
093	C-310.12	193	C-360.01	293	C-360.01	393	C-360.12	493	C-360.12	593	C-361.11	693	E-135.06	793		893		993	
094	C-310.12	194	C-360.01	294	C-360.01	394	C-360.12	494	C-360.12	594	C-361.11	694	E-135.06	794		894		994	
095	C-360.01	195	C-360.01	295	C-360.01	395	C-360.12	495	C-360.12	595	C-361.11	695	E-135.06	795		895		995	
096	C-360.01	196	C-360.01	296	C-360.01	396	C-360.12	496	C-360.12	596	C-361.11	696	E-135.06	796		896		996	
097	C-360.01	197	C-360.01	297	C-360.01	397	C-360.12	497	C-360.12	597	C-361.11	697	E-135.06	797		897		997	
098	C-360.01	198	C-360.01	298	C-360.01	398	C-360.12	498	C-360.12	598	C-361.11	698	E-135.06	798		898		998	
099	C-360.01	199	C-360.01	299	C-360.01	399	C-360.12	499	C-360.12	599	C-361.11	699	E-135.06	799		899		999	

FORD MOTOR COMPANY
STANDARD PARTS

INDEX

THE TWO NUMBERS AT THE TOP OF THE NO. COLUMN ARE THE FIRST DIGITS OF THE FIVE DIGIT NUMBER AND FOLLOWING NUMBERS IN THE COLUMN ARE THE LAST THREE DIGITS OF THE FIVE DIGIT NUMBER.

No.	Page	No.	Page	No.	Page	No.	Page	No.	Page	No.	Page	No.	Page	No.	Page	No.	Page	No.	Page
60		60		60		60		60		60		60		60		60		60	
000	G-130.02	100	G-130.02	200	G-130.02	300	G-110.01	400	G-110.01	500	G-110.01	600	G-110.01	700	G-110.02	800	G-110.02	900	G-150.02
001	G-130.02	101	G-130.02	201	G-130.02	301	G-110.01	401	G-110.01	501	G-110.01	601	G-110.01	701	G-110.02	801	G-110.02	901	G-150.02
002	G-130.02	102	G-130.02	202	G-130.02	302	G-110.01	402	G-110.01	502	G-110.01	602	G-110.01	702	G-110.02	802	G-110.02	902	G-150.02
003	G-130.02	103	G-130.02	203	G-130.02	303	G-110.01	403	G-110.01	503	G-110.01	603	G-110.01	703	G-110.02	803	G-110.02	903	G-150.02
004	G-130.02	104	G-130.02	204	G-130.02	304	G-110.01	404	G-110.01	504	G-110.01	604	G-110.01	704	G-110.02	804	G-110.02	904	G-150.02
005	G-130.02	105	G-130.02	205	G-130.02	305	G-110.01	405	G-110.01	505	G-110.01	605	G-110.01	705	G-110.02	805	G-110.02	905	G-150.02
006	G-130.02	106	G-130.02	206	G-130.02	306	G-110.01	406	G-110.01	506	G-110.01	606	G-110.01	706	G-110.02	806	G-110.02	906	G-150.02
007	G-130.02	107	G-130.02	207	G-130.02	307	G-110.01	407	G-110.01	507	G-110.01	607	G-110.01	707	G-110.02	807	G-110.02	907	G-150.02
008	G-130.02	108	G-130.02	208	G-130.02	308	G-110.01	408	G-110.01	508	G-110.01	608	G-110.01	708	G-110.02	808	G-110.02	908	G-150.02
009	G-130.02	109	G-130.02	209	G-130.02	309	G-110.01	409	G-110.01	509	G-110.01	609	G-110.01	709	G-110.02	809	G-110.02	909	G-150.02
010	G-130.02	110	G-130.02	210	G-130.02	310	G-110.01	410	G-110.01	510	G-110.01	610	G-110.01	710	G-110.02	810	G-110.02	910	G-150.02
011	G-130.02	111	G-130.02	211	G-130.02	311	G-110.01	411	G-110.01	511	G-110.01	611	G-110.01	711	G-110.02	811	G-110.02	911	G-150.02
012	G-130.02	112	G-130.02	212	G-130.02	312	G-110.01	412	G-110.01	512	G-110.01	612	G-110.01	712	G-110.02	812	G-110.02	912	G-150.02
013	G-130.02	113	G-130.02	213	G-130.02	313	G-110.01	413	G-110.01	513	G-110.01	613	G-110.01	713	G-110.02	813	G-110.02	913	G-150.02
014	G-130.02	114	G-130.02	214	G-130.02	314	G-110.01	414	G-110.01	514	G-110.01	614	G-110.01	714	G-110.02	814	G-110.02	914	G-150.02
015	G-130.02	115	G-130.02	215	G-130.02	315	G-110.01	415	G-110.01	515	G-110.01	615	G-110.02	715	G-110.02	815	G-110.02	915	G-150.02
016	G-130.02	116	G-130.02	216	G-130.02	316	G-110.01	416	G-110.01	516	G-110.01	616	G-110.02	716	G-110.02	816	G-110.02	916	G-150.02
017	G-130.02	117	G-130.02	217	G-130.02	317	G-110.01	417	G-110.01	517	G-110.01	617	G-110.02	717	G-110.02	817	G-110.02	917	G-150.02
018	G-130.02	118	G-130.02	218	G-130.02	318	G-110.01	418	G-110.01	518	G-110.01	618	G-110.02	718	G-110.02	818	G-110.02	918	G-150.02
019	G-130.02	119	G-130.02	219	G-130.02	319	G-110.01	419	G-110.01	519	G-110.01	619	G-110.02	719	G-110.02	819	G-110.02	919	G-150.02
020	G-130.02	120	G-130.02	220	G-130.02	320	G-110.01	420	G-110.01	520	G-110.01	620	G-110.02	720	G-110.02	820	G-110.02	920	G-150.02
021	G-130.02	121	G-130.02	221	G-130.02	321	G-110.01	421	G-110.01	521	G-110.01	621	G-110.02	721	G-110.02	821	G-110.02	921	G-150.02
022	G-130.02	122	G-130.02	222	G-130.02	322	G-110.01	422	G-110.01	522	G-110.01	622	G-110.02	722	G-110.02	822	G-110.02	922	G-150.02
023	G-130.02	123	G-130.02	223	G-130.02	323	G-110.01	423	G-110.01	523	G-110.01	623	G-110.02	723	G-110.02	823	G-110.02	923	G-150.02
024	G-130.02	124	G-130.02	224	G-130.02	324	G-110.01	424	G-110.01	524	G-110.01	624	G-110.02	724	G-110.02	824	G-110.02	924	G-150.02
025	G-130.02	125	G-130.02	225	G-130.02	325	G-110.01	425	G-110.01	525	G-110.01	625	G-110.02	725	G-110.02	825	G-110.02	925	G-150.02
026	G-130.02	126	G-130.02	226	G-130.02	326	G-110.01	426	G-110.01	526	G-110.01	626	G-110.02	726	G-110.02	826	G-110.02	926	G-150.02
027	G-130.02	127	G-130.02	227	G-130.02	327	G-110.01	427	G-110.01	527	G-110.01	627	G-110.02	727	G-110.02	827	G-110.02	927	G-150.02
028	G-130.02	128	G-130.02	228	G-130.02	328	G-110.01	428	G-110.01	528	G-110.01	628	G-110.02	728	G-110.02	828	G-110.02	928	G-150.02
029	G-130.02	129	G-130.02	229	G-130.02	329	G-110.01	429	G-110.01	529	G-110.01	629	G-110.02	729	G-110.02	829	G-110.02	929	G-150.02
030	G-130.02	130	G-130.02	230	G-130.02	330	G-110.01	430	G-110.01	530	G-110.01	630	G-110.02	730	G-110.02	830	G-110.02	930	G-150.02
031	G-130.02	131	G-130.02	231	G-130.02	331	G-110.01	431	G-110.01	531	G-110.01	631	G-110.02	731	G-110.02	831	G-110.02	931	G-150.02
032	G-130.02	132	G-130.02	232	G-130.02	332	G-110.01	432	G-110.01	532	G-110.01	632	G-110.02	732	G-110.02	832	G-110.02	932	G-150.02
033	G-130.02	133	G-130.02	233	G-130.02	333	G-110.01	433	G-110.01	533	G-110.01	633	G-110.02	733	G-110.02	833	G-110.02	933	G-150.02
034	G-130.02	134	G-130.02	234	G-130.02	334	G-110.01	434	G-110.01	534	G-110.01	634	G-110.02	734	G-110.02	834	G-110.02	934	G-150.02
035	G-130.02	135	G-130.02	235	G-130.02	335	G-110.01	435	G-110.01	535	G-110.01	635	G-110.02	735		835	G-110.02	935	G-150.02
036	G-130.02	136	G-130.02	236	G-130.02	336	G-110.01	436	G-110.01	536	G-110.01	636	G-110.02	736		836	G-110.02	936	G-150.02
037	G-130.02	137	G-130.02	237	G-130.02	337	G-110.01	437	G-110.01	537	G-110.01	637	G-110.02	737		837	G-110.02	937	G-150.02
038	G-130.02	138	G-130.02	238	G-130.02	338	G-110.01	438	G-110.01	538	G-110.01	638	G-110.02	738		838	G-110.02	938	G-150.02
039	G-130.02	139	G-130.02	239	G-130.02	339	G-110.01	439	G-110.01	539	G-110.01	639	G-110.02	739		839	G-110.02	939	G-150.02
040	G-130.02	140	G-130.02	240	G-130.02	340	G-110.01	440	G-110.01	540	G-110.01	640	G-110.02	740		840	G-110.02	940	G-150.02
041	G-130.02	141	G-130.02	241	G-130.02	341	G-110.01	441	G-110.01	541	G-110.01	641	G-110.02	741		841	G-110.02	941	G-150.02
042	G-130.02	142	G-130.02	242	G-130.02	342	G-110.01	442	G-110.01	542	G-110.01	642	G-110.02	742		842	G-110.02	942	G-150.02
043	G-130.02	143	G-130.02	243	G-130.02	343	G-110.01	443	G-110.01	543	G-110.01	643	G-110.02	743		843	G-110.02	943	G-150.02
044	G-130.02	144	G-130.02	244	G-130.02	344	G-110.01	444	G-110.01	544	G-110.01	644	G-110.02	744		844	G-110.02	944	G-150.02
045	G-130.02	145	G-130.02	245	G-130.02	345	G-110.01	445	G-110.01	545	G-110.01	645	G-110.02	745		845	G-110.02	945	G-150.02
046	G-130.02	146	G-130.02	246	G-130.02	346	G-110.01	446	G-110.01	546	G-110.01	646	G-110.02	746		846	G-110.02	946	G-150.02
047	G-130.02	147	G-130.02	247	G-130.02	347	G-110.01	447	G-110.01	547	G-110.01	647	G-110.02	747		847	G-110.02	947	G-150.02
048	G-130.02	148	G-130.02	248	G-130.02	348	G-110.01	448	G-110.01	548	G-110.01	648	G-110.02	748		848	G-110.02	948	G-150.02
049	G-130.02	149	G-130.02	249	G-130.02	349	G-110.01	449	G-110.01	549	G-110.01	649	G-110.02	749		849	G-110.02	949	G-150.02
050	G-130.02	150	G-130.02	250	G-130.02	350	G-110.01	450	G-110.01	550	G-110.01	650	G-110.02	750		850	G-110.02	950	G-150.02
051	G-130.02	151	G-130.02	251	G-130.02	351	G-110.01	451	G-110.01	551	G-110.01	651	G-110.02	751		851	G-110.02	951	G-150.02
052	G-130.02	152	G-130.02	252	G-130.02	352	G-110.01	452	G-110.01	552	G-110.01	652	G-110.02	752		852	G-110.02	952	G-150.02
053	G-130.02	153	G-130.02	253	G-130.02	353	G-110.01	453	G-110.01	553	G-110.01	653	G-110.02	753		853	G-110.02	953	G-150.02
054	G-130.02	154	G-130.02	254	G-130.02	354	G-110.01	454	G-110.01	554	G-110.01	654	G-110.02	754		854	G-110.02	954	G-150.02
055	G-130.02	155	G-130.02	255	G-130.02	355	G-110.01	455	G-110.01	555	G-110.01	655	G-110.02	755		855	G-110.02	955	G-150.02
056	G-130.02	156	G-130.02	256	G-130.02	356	G-110.01	456	G-110.01	556	G-110.01	656	G-110.02	756		856	G-110.02	956	G-150.02
057	G-130.02	157	G-130.02	257	G-130.02	357	G-110.01	457	G-110.01	557	G-110.01	657	G-110.02	757		857	G-110.02	957	G-150.02
058	G-130.02	158	G-130.02	258	G-130.02	358	G-110.01	458	G-110.01	558	G-110.01	658	G-110.02	758		858	G-110.02	958	G-150.02
059	G-130.02	159	G-130.02	259	G-130.02	359	G-110.01	459	G-110.01	559	G-110.01	659	G-110.02	759		859	G-110.02	959	G-150.02
060	G-130.02	160	G-130.02	260	G-130.02	360	G-110.01	460	G-110.01	560	G-110.01	660	G-110.02	760		860	G-110.02	960	G-150.02
061	G-130.02	161	G-130.02	261	G-130.02	361	G-110.01	461	G-110.01	561	G-110.01	661	G-110.02	761		861	G-110.02	961	G-150.02
062	G-130.02	162	G-130.02	262	G-130.02	362	G-110.01	462	G-110.01	562	G-110.01	662	G-110.02	762		862	G-110.02	962	G-150.02
063	G-130.02	163	G-130.02	263	G-130.02	363	G-110.01	463	G-110.01	563	G-110.01	663	G-110.02	763		863	G-110.02	963	G-150.02
064	G-130.02	164	G-130.02	264	G-130.02	364	G-110.01	464	G-110.01	564	G-110.01	664	G-110.02	764		864	G-110.02	964	G-150.02
065	G-130.02	165	G-130.02	265	G-130.02	365	G-110.01	465	G-110.01	565	G-110.01	665	G-110.02	765		865	G-110.02	965	G-150.02
066	G-130.02	166	G-130.02	266	G-130.02	366	G-110.01	466	G-110.01	566	G-110.01	666	G-110.02	766		866	G-110.02	966	G-150.02
067	G-130.02	167	G-130.02	267	G-130.02	367	G-110.01	467	G-110.01	567	G-110.01	667	G-110.02	767		867	G-110.02	967	G-150.02
068	G-130.02	168	G-130.02	268	G-130.02	368	G-110.01	468	G-110.01	568	G-110.01	668	G-110.02	768		868	G-110.02	968	G-150.02
069	G-130.02	169	G-130.02	269	G-130.02	369	G-110.01	469	G-110.01	569	G-110.01	669	G-110.02	769		879	G-110.02	969	G-150.02
070	G-130.02	170	G-130.02	270	G-130.02	370	G-110.01	470	G-110.01	570	G-110.01	670	G-110.02	770		870	G-110.02	970	G-150.02
071	G-130.02	171	G-130.02	271	G-130.02	371	G-110.01	471	G-110.01	571	G-110.01	671	G-110.02	771		871		971	G-150.02
072	G-130.02	172	G-130.02	272	G-130.02	372	G-110.01	472	G-110.01	572	G-110.01	672	G-110.02	772		872		972	G-150.02
073	G-130.02	173	G-130.02	273	G-130.02	373	G-110.01	473	G-110.01	573	G-110.01	673	G-110.02	773		873		973	G-150.02
074	G-130.02	174	G-130.02	274	G-130.02	374	G-110.01	474	G-110.01	574	G-110.01	674	G-110.02	774		874		974	G-150.02
075	G-130.02	175	G-130.02	275	G-130.02	375	G-110.01	475	G-110.01	575	G-110.01	675	G-110.02	775	G-110.02	875	G-150.02	975	G-150.02
076	G-130.02	176	G-130.02	276	G-130.02	376	G-110.01	476	G-110.01	576	G-110.01	676	G-110.02	776	G-110.02	876	G-150.02	976	G-150.02
077	G-130.02	177	G-130.02	277	G-130.02	377	G-110.01	477	G-110.01	577	G-110.01	677	G-110.02	777	G-110.02	877	G-150.02	977	G-150.02
078	G-130.02	178	G-130.02	278	G-130.02	378	G-110.01	478	G-110.01	578	G-110.01	678	G-110.02	778	G-110.02	878	G-150.02	978	G-150.02
079	G-130.02	179	G-130.02	279		379	G-110.01	479	G-110.01	579	G-110.01	679	G-110.02	779	G-110.02	879	G-150.02	979	G-150.02
080	G-130.02	180	G-130.02	280		380	G-110.01	480	G-110.01	580	G-110.01	680	G-110.02	780	G-110.02	880	G-150.02	980	G-150.02
081	G-130.02	181	G-130.02	281		381	G-110.01	481	G-110.01	581	G-110.01	681	G-110.02	781	G-110.02	881	G-150.02	981	G-150.02
082	G-130.02	182	G-130.02	282		382	G-110.01	482	G-110.01	582	G-110.01	682	G-110.02	782	G-110.02	882	G-150.02	982	G-150.02
083	G-130.02	183	G-130.02	283		383	G-110.01	483	G-110.01	583	G-110.01	683	G-110.02	783	G-110.02	883	G-150.02	983	G-150.02
084	G-130.02	184	G-130.02	284		384	G-110.01	484	G-110.01	584	G-110.01	684	G-110.02	784	G-110.02	884	G-150.02	984	G-150.02
085	G-130.02	185	G-130.02	285		385	G-110.01	485	G-110.01	585	G-110.01	685	G-110.02	785	G-110.02	885	G-150.02	985	G-150.02
086	G-130.02	186	G-130.02	286		386	G-110.01	486	G-110.01	586	G-110.01	686	G-110.02	786	G-110.02	886	G-150.02	986	G-150.02
087	G-130.02	187	G-130.02	287		387	G-110.01	487	G-110.01	587	G-110.01	687	G-110.02	787	G-110.02	887	G-150.02	987	G-150.02
088	G-130.02	188	G-130.02	288		388	G-110.01	488	G-110.01	588	G-110.01	688	G-110.02	788	G-110.02	888	G-150.02	988	G-150.02
089	G-130.02	189	G-130.02	289		389	G-110.01	489	G-110.01	589	G-110.01	689	G-110.02	789	G-110.02	889	G-150.02	989	G-150.02
090	G-130.02	190	G-130.02	290		390	G-110.01	490	G-110.01	590	G-110.01	690	G-110.02	790	G-110.02	890	G-150.02	990	G-150.02
091	G-130.02	191	G-130.02	291		391	G-110.01	491	G-110.01	591	G-110.01	691	G-110.02	791	G-110.02	891	G-150.02	991	G-150.02
092	G-130.02	192	G-130.02	292		392	G-110.01	492	G-110.01	592	G-110.01	692	G-110.02	792	G-110.02	892	G-150.02	992	G-150.02
093	G-130.02	193	G-130.02	293		393	G-110.01	493	G-110.01	593	G-110.01	693	G-110.02	793	G-110.02	893	G-150.02	993	G-150.02
094	G-130.02	194	G-130.02	294		394	G-110.01	494	G-110.01	594	G-110.01	694	G-110.02	794	G-110.02	894	G-150.02	994	G-150.02
095	G-130.02	195	G-130.02	295		395	G-110.01	495	G-110.01	595	G-110.01	695	G-110.02	795	G-110.02	895	G-150.02	995	G-150.02
096	G-130.02	196	G-130.02	296		396	G-110.01	496	G-110.01	596	G-110.01	696	G-110.02	796	G-110.02	896	G-150.02	996	G-150.02
097	G-130.02	197	G-130.02	297		397	G-110.01	497	G-110.01	597	G-110.01	697	G-110.02	797	G-110.02	897	G-150.02	997	G-150.02
098	G-130.02	198	G-130.02	298		398	G-110.01	498	G-110.01	598	G-110.01	698	G-110.02	798	G-110.02	898	G-150.02	998	G-150.02
099	G-130.02	199	G-130.02	299		399	G-110.01	499	G-110.01	599	G-110.01	699	G-110.02	799	G-110.02	899	G-150.02	999	G-150.02

FORD MOTOR COMPANY
STANDARD PARTS

INDEX

THE TWO NUMBERS AT THE TOP OF THE NO. COLUMN ARE THE FIRST DIGITS OF THE FIVE DIGIT NUMBER AND FOLLOWING NUMBERS IN THE COLUMN ARE THE LAST THREE DIGITS OF THE FIVE DIGIT NUMBER.

No.	Page	No.	Page	No.	Page	No.	Page	No.	Page	No.	Page	No.	Page	No.	Page	No.	Page	No.	Page
61		61		61		61		61		61		61		61		61		61	
000	G-150.02	100	G-150.02	200	G-150.03	300	G-150.03	400	G-120.02	500	G-120.02	600	G-120.03	700	G-120.03	800	G-160.02	900	G-160.02
001	G-150.02	101	G-150.02	201	G-150.03	301	G-150.03	401	G-120.02	501	G-120.02	601	G-120.03	701	G-120.03	801	G-160.02	901	G-160.02
002	G-150.02	102	G-150.02	202	G-150.03	302	G-150.03	402	G-120.02	502	G-120.02	602	G-120.03	702	G-120.03	802	G-160.02	902	G-160.02
003	G-150.02	103	G-150.02	203	G-150.03	303	G-150.03	403	G-120.02	503	G-120.02	603	G-120.03	703	G-120.03	803	G-160.02	903	G-160.02
004	G-150.02	104	G-150.02	204	G-150.03	304	G-150.03	404	G-120.02	504	G-120.02	604	G-120.03	704	G-120.03	804	G-160.02	904	G-160.02
005	G-150.02	105	G-150.02	205	G-150.03	305	G-150.03	405	G-120.02	505	G-120.02	605	G-120.03	705	G-120.03	805	G-160.02	905	G-160.02
006	G-150.02	106	G-150.02	206	G-150.03	306	G-150.03	406	G-120.02	506	G-120.02	606	G-120.03	706	G-120.03	806	G-160.02	906	G-160.02
007	G-150.02	107	G-150.02	207	G-150.03	307	G-150.03	407	G-120.02	507	G-120.02	607	G-120.03	707	G-120.03	807	G-160.02	907	G-160.02
008	G-150.02	108	G-150.02	208	G-150.03	308	G-150.03	408	G-120.02	508	G-120.02	608	G-120.03	708	G-120.03	808	G-160.02	908	G-160.02
009	G-150.02	109	G-150.02	209	G-150.03	309	G-150.03	409	G-120.02	509	G-120.02	609	G-120.03	709	G-120.03	809	G-160.02	909	G-160.02
010	G-150.02	110	G-150.02	210	G-150.03	310	G-150.03	410	G-120.02	510	G-120.02	610	G-120.03	710	G-120.03	810	G-160.02	910	G-160.02
011	G-150.02	111	G-150.02	211	G-150.03	311	G-150.03	411	G-120.02	511	G-120.02	611	G-120.03	711	G-120.03	811	G-160.02	911	G-160.02
012	G-150.02	112	G-150.02	212	G-150.03	312	G-150.03	412	G-120.02	512	G-120.02	612	G-120.03	712	G-120.03	812	G-160.02	912	G-160.02
013	G-150.02	113	G-150.02	213	G-150.03	313	G-150.03	413	G-120.02	513	G-120.02	613	G-120.03	713	G-120.03	813	G-160.02	913	G-160.02
014	G-150.02	114	G-150.02	214	G-150.03	314	G-150.03	414	G-120.02	514	G-120.02	614	G-120.03	714	G-120.03	814	G-160.02	914	G-160.02
015	G-150.02	115	G-150.02	215	G-150.03	315	G-150.03	415	G-120.02	515	G-120.02	615	G-120.03	715	G-120.03	815	G-160.02	915	G-160.02
016	G-150.02	116	G-150.02	216	G-150.03	316	G-150.03	416	G-120.02	516	G-120.02	616	G-120.03	716	G-120.03	816	G-160.02	916	G-160.02
017	G-150.02	117	G-150.02	217	G-150.03	317	G-150.03	417	G-120.02	517	G-120.02	617	G-120.03	717	G-120.03	817	G-160.02	917	G-160.02
018	G-150.02	118	G-150.02	218	G-150.03	318	G-150.03	418	G-120.02	518	G-120.02	618	G-120.03	718	G-120.03	818	G-160.02	918	G-160.02
019	G-150.02	119	G-150.02	219	G-150.03	319	G-150.03	419	G-120.02	519	G-120.02	619	G-120.03	719	G-120.03	819	G-160.02	919	G-160.02
020	G-150.02	120	G-150.02	220	G-150.03	320	G-150.03	420	G-120.02	520	G-120.02	620	G-120.03	720	G-120.03	820	G-160.02	920	G-160.02
021	G-150.02	121	G-150.02	221	G-150.03	321	G-150.03	421	G-120.02	521	G-120.02	621	G-120.03	721	G-120.03	821	G-160.02	921	G-160.02
022	G-150.02	122	G-150.02	222	G-150.03	322	G-150.03	422	G-120.02	522	G-120.02	622	G-120.03	722	G-120.03	822	G-160.02	922	G-160.02
023	G-150.02	123	G-150.02	223	G-150.03	323	G-150.03	423	G-120.02	523	G-120.02	623	G-120.03	723	G-120.03	823	G-160.02	923	G-160.02
024	G-150.02	124	G-150.02	224	G-150.03	324	G-150.03	424	G-120.02	524	G-120.02	624	G-120.03	724	G-120.03	824	G-160.02	924	G-160.02
025	G-150.02	125	G-150.02	225	G-150.03	325	G-150.03	425	G-120.02	525	G-120.02	625	G-120.03	725	G-120.03	825	G-160.02	925	G-160.02
026	G-150.02	126	G-150.02	226	G-150.03	326	G-150.03	426	G-120.02	526	G-120.02	626	G-120.03	726	G-120.03	826	G-160.02	926	G-160.02
027	G-150.02	127	G-150.02	227	G-150.03	327	G-150.03	427	G-120.02	527	G-120.02	627	G-120.03	727	G-120.03	827	G-160.02	927	G-160.02
028	G-150.02	128	G-150.02	228	G-150.03	328	G-150.03	428	G-120.02	528	G-120.02	628	G-120.03	728	G-120.03	828	G-160.02	928	G-160.02
029	G-150.02	129	G-150.02	229	G-150.03	329	G-150.03	429	G-120.02	529	G-120.02	629	G-120.03	729	G-120.03	829	G-160.02	929	G-160.02
030	G-150.02	130	G-150.02	230	G-150.03	330	G-150.03	430	G-120.02	530	G-120.02	630	G-120.03	730	G-120.03	830	G-160.02	930	G-160.02
031	G-150.02	131	G-150.02	231	G-150.03	331	G-150.03	431	G-120.02	531	G-120.02	631	G-120.03	731	G-120.03	831	G-160.02	931	G-160.02
032	G-150.02	132	G-150.02	232	G-150.03	332	G-150.03	432	G-120.02	532	G-120.02	632	G-120.03	732	G-120.03	832	G-160.02	932	G-160.02
033	G-150.02	133	G-150.02	233	G-150.03	333	G-150.03	433	G-120.02	533	G-120.02	633	G-120.03	733	G-120.03	833	G-160.02	933	G-160.02
034	G-150.02	134	G-150.02	234	G-150.03	334	G-150.03	434	G-120.02	534	G-120.02	634	G-120.03	734	G-120.03	834	G-160.02	934	G-160.02
035	G-150.02	135	G-150.02	235	G-150.03	335	G-150.03	435	G-120.02	535	G-120.02	635	G-120.03	735	G-120.03	835	G-160.02	935	G-160.02
036	G-150.02	136	G-150.02	236	G-150.03	336	G-150.03	436	G-120.02	536	G-120.02	636	G-120.03	736	G-120.03	836	G-160.02	936	G-160.02
037	G-150.02	137	G-150.02	237	G-150.03	337	G-150.03	437	G-120.02	537	G-120.02	637	G-120.03	737	G-120.03	837	G-160.02	937	G-160.02
038	G-150.02	138	G-150.02	238	G-150.03	338	G-150.03	438	G-120.02	538	G-120.02	638	G-120.03	738	G-120.03	838	G-160.02	938	G-160.02
039	G-150.02	139	G-150.02	239	G-150.03	339	G-150.03	439	G-120.02	539	G-120.02	639	G-120.03	739	G-120.03	839	G-160.02	939	G-160.02
040	G-150.02	140	G-150.02	240	G-150.03	340	G-150.03	440	G-120.02	540	G-120.02	640	G-120.03	740	G-120.03	840	G-160.02	940	G-160.02
041	G-150.02	141	G-150.02	241	G-150.03	341	G-150.03	441	G-120.02	541	G-120.02	641	G-120.03	741	G-120.03	841	G-160.02	941	G-160.02
042	G-150.02	142	G-150.02	242	G-150.03	342	G-150.03	442	G-120.02	542	G-120.02	642	G-120.03	742	G-120.03	842	G-160.02	942	G-160.02
043	G-150.02	143	G-150.02	243	G-150.03	343	G-150.03	443	G-120.02	543	G-120.02	643	G-120.03	743	G-120.03	843	G-160.02	943	G-160.02
044	G-150.02	144	G-150.02	244		344	G-150.03	444	G-120.02	544	G-120.02	644	G-120.03	744		844	G-160.02	944	G-160.02
045	G-150.02	145	G-150.02	245		345	G-150.03	445	G-120.02	545	G-120.02	645	G-120.03	745		845	G-160.02	945	G-160.02
046	G-150.02	146	G-150.02	246		346	G-150.03	446	G-120.02	546	G-120.02	646	G-120.03	746		846	G-160.02	946	G-160.02
047	G-150.02	147	G-150.02	247		347	G-150.03	447	G-120.02	547	G-120.02	647	G-120.03	747		847	G-160.02	947	G-160.02
048	G-150.02	148	G-150.03	248		348	G-150.03	448	G-120.02	548	G-120.02	648	G-120.03	748		848	G-160.02	948	G-160.02
049	G-150.02	149	G-150.03	249		349	G-150.03	449	G-120.02	549	G-120.02	649	G-120.03	749		849	G-160.02	949	G-160.02
050	G-150.02	150	G-150.03	250		350	G-150.03	450	G-120.02	550	G-120.02	650	G-120.03	750		850	G-160.02	950	G-160.02
051	G-150.02	151	G-150.03	251		351	G-150.03	451	G-120.02	551	G-120.02	651	G-120.03	751		851	G-160.02	951	G-160.02
052	G-150.02	152	G-150.03	252		352	G-150.03	452	G-120.02	552	G-120.02	652	G-120.03	752		852	G-160.02	952	G-160.02
053	G-150.02	153	G-150.03	253		353	G-150.03	453	G-120.02	553	G-120.02	653	G-120.03	753		853	G-160.02	953	G-160.02
054	G-150.02	154	G-150.03	254		354	G-150.03	454	G-120.02	554	G-120.02	654	G-120.03	754		854	G-160.02	954	G-160.02
055	G-150.02	155	G-150.03	255		355	G-150.03	455	G-120.02	555	G-120.02	655	G-120.03	755		855	G-160.02	955	G-160.02
056	G-150.02	156	G-150.03	256		356	G-150.03	456	G-120.02	556	G-120.02	656	G-120.03	756		856	G-160.02	956	G-160.02
057	G-150.02	157	G-150.03	257		357	G-150.03	457	G-120.02	557	G-120.02	657	G-120.03	757		857	G-160.02	957	G-160.02
058	G-150.02	158	G-150.03	258		358	G-150.03	458	G-120.02	558	G-120.02	658	G-120.03	758		858	G-160.02	958	G-160.02
059	G-150.02	159	G-150.03	259		359	G-150.03	459	G-120.02	559	G-120.02	659	G-120.03	759		859	G-160.02	959	G-160.02
060	G-150.02	160	G-150.03	260		360	G-150.03	460	G-120.02	560	G-120.02	660	G-120.03	760		860	G-160.02	960	G-160.02
061	G-150.02	161	G-150.03	261		361	G-150.03	461	G-120.02	561	G-120.02	661	G-120.03	761		861	G-160.02	961	G-160.02
062	G-150.02	162	G-150.03	262		362	G-150.03	462	G-120.02	562	G-120.02	662	G-120.03	762		862	G-160.02	962	G-160.02
063	G-150.02	163	G-150.03	263		363	G-150.03	463	G-120.02	563	G-120.02	663	G-120.03	763		863	G-160.02	963	G-160.02
064	G-150.02	164	G-150.03	264		364	G-150.03	464	G-120.02	564	G-120.02	664	G-120.03	764		864	G-160.02	964	G-160.02
065	G-150.02	165	G-150.03	265		365	G-150.03	465	G-120.02	565	G-120.02	665	G-120.03	765		865	G-160.02	965	G-160.02
066	G-150.02	166	G-150.03	266		366	G-150.03	466	G-120.02	566	G-120.02	666	G-120.03	766		866	G-160.02	966	G-160.02
067	G-150.02	167	G-150.03	267		367	G-150.03	467	G-120.02	567	G-120.02	667	G-120.03	767		867	G-160.02	967	G-160.02
068	G-150.02	168	G-150.03	268		368	G-150.03	468	G-120.02	568	G-120.02	668	G-120.03	768		868	G-160.02	968	G-160.02
069	G-150.02	169	G-150.03	269		369	G-150.03	469	G-120.02	569	G-120.02	669	G-120.03	769		879	G-160.02	969	G-160.02
070	G-150.02	170	G-150.03	270		370	G-150.03	470	G-120.02	570	G-120.02	670	G-120.03	770		870	G-160.02	970	G-160.02
071	G-150.02	171	G-150.03	271		371		471	G-120.02	571	G-120.02	671	G-120.03	771		871	G-160.02	971	G-160.02
072	G-150.02	172	G-150.03	272		372		472	G-120.02	572	G-120.02	672	G-120.03	772		872	G-160.02	972	G-160.02
073	G-150.02	173	G-150.03	273		373		473	G-120.02	573	G-120.02	673	G-120.03	773		873	G-160.02	973	G-160.02
074	G-150.02	174	G-150.03	274		374		474	G-120.02	574	G-120.02	674	G-120.03	774		874	G-160.02	974	G-160.02
075	G-150.02	175	G-150.03	275	G-150.03	375	G-120.02	475	G-120.02	575	G-120.02	675	G-120.03	775	G-160.02	875	G-160.02	975	G-160.02
076	G-150.02	176	G-150.03	276	G-150.03	376	G-120.02	476	G-120.02	576	G-120.03	676	G-120.03	776	G-160.02	876	G-160.02	976	G-160.03
077	G-150.02	177	G-150.03	277	G-150.03	377	G-120.02	477	G-120.02	577	G-120.03	677	G-120.03	777	G-160.02	877	G-160.02	977	G-160.03
078	G-150.02	178	G-150.03	278	G-150.03	378	G-120.02	478	G-120.02	578	G-120.03	678	G-120.03	778	G-160.02	878	G-160.02	978	G-160.03
079	G-150.02	179	G-150.03	279	G-150.03	379	G-120.02	479	G-120.02	579	G-120.03	679	G-120.03	779	G-160.02	879	G-160.02	979	G-160.03
080	G-150.02	180	G-150.03	280	G-150.03	380	G-120.02	480	G-120.02	580	G-120.03	680	G-120.03	780	G-160.02	880	G-160.02	980	G-160.03
081	G-150.02	181	G-150.03	281	G-150.03	381	G-120.02	481	G-120.02	581	G-120.03	681	G-120.03	781	G-160.02	881	G-160.02	981	G-160.03
082	G-150.02	182	G-150.03	282	G-150.03	382	G-120.02	482	G-120.02	582	G-120.03	682	G-120.03	782	G-160.02	882	G-160.02	982	G-160.03
083	G-150.02	183	G-150.03	283	G-150.03	383	G-120.02	483	G-120.02	583	G-120.03	683	G-120.03	783	G-160.02	883	G-160.02	983	G-160.03
084	G-150.02	184	G-150.03	284	G-150.03	384	G-120.02	484	G-120.02	584	G-120.03	684	G-120.03	784	G-160.02	884	G-160.02	984	G-160.03
085	G-150.02	185	G-150.03	285	G-150.03	385	G-120.02	485	G-120.02	585	G-120.03	685	G-120.03	785	G-160.02	885	G-160.02	985	G-160.03
086	G-150.02	186	G-150.03	286	G-150.03	386	G-120.02	486	G-120.02	586	G-120.03	686	G-120.03	786	G-160.02	886	G-160.02	986	G-160.03
087	G-150.02	187	G-150.03	287	G-150.03	387	G-120.02	487	G-120.02	587	G-120.03	687	G-120.03	787	G-160.02	887	G-160.02	987	G-160.03
088	G-150.02	188	G-150.03	288	G-150.03	388	G-120.02	488	G-120.02	588	G-120.03	688	G-120.03	788	G-160.02	888	G-160.02	988	G-160.03
089	G-150.02	189	G-150.03	289	G-150.03	389	G-120.02	489	G-120.02	589	G-120.03	689	G-120.03	789	G-160.02	889	G-160.02	989	G-160.03
090	G-150.02	190	G-150.03	290	G-150.03	390	G-120.02	490	G-120.02	590	G-120.03	690	G-120.03	790	G-160.02	890	G-160.02	990	G-160.03
091	G-150.02	191	G-150.03	291	G-150.03	391	G-120.02	491	G-120.02	591	G-120.03	691	G-120.03	791	G-160.02	891	G-160.02	991	G-160.03
092	G-150.02	192	G-150.03	292	G-150.03	392	G-120.02	492	G-120.02	592	G-120.03	692	G-120.03	792	G-160.02	892	G-160.02	992	G-160.03
093	G-150.02	193	G-150.03	293	G-150.03	393	G-120.02	493	G-120.02	593	G-120.03	693	G-120.03	793	G-160.02	893	G-160.02	993	G-160.03
094	G-150.02	194	G-150.03	294	G-150.03	394	G-120.02	494	G-120.02	594	G-120.03	694	G-120.03	794	G-160.02	894	G-160.02	994	G-160.03
095	G-150.02	195	G-150.03	295	G-150.03	395	G-120.02	495	G-120.02	595	G-120.03	695	G-120.03	795	G-160.02	895	G-160.02	995	G-160.03
096	G-150.02	196	G-150.03	296	G-150.03	396	G-120.02	496	G-120.02	596	G-120.03	696	G-120.03	796	G-160.02	896	G-160.02	996	G-160.03
097	G-150.02	197	G-150.03	297	G-150.03	397	G-120.02	497	G-120.02	597	G-120.03	697	G-120.03	797	G-160.02	897	G-160.02	997	G-160.03
098	G-150.02	198	G-150.03	298	G-150.03	398	G-120.02	498	G-120.02	598	G-120.03	698	G-120.03	798	G-160.02	898	G-160.02	998	G-160.03
099	G-150.02	199	G-150.03	299	G-150.03	399	G-120.02	499	G-120.02	599	G-120.03	699	G-120.03	799	G-160.02	899	G-160.02	999	G-160.03

FORD MOTOR COMPANY
STANDARD PARTS

INDEX

THE TWO NUMBERS AT THE TOP OF THE NO. COLUMN ARE THE FIRST DIGITS OF THE FIVE DIGIT NUMBER AND FOLLOWING NUMBERS IN THE COLUMN ARE THE LAST THREE DIGITS OF THE FIVE DIGIT NUMBER.

No.	Page	No.	Page	No.	Page	No.	Page	No.	Page	No.	Page	No.	Page	No.	Page	No.	Page	No.	Page
62		62		62		62		62		62		62		62		62		62	
000	G-160.03	100	G-160.03	200	G-140.02	300	G-140.02	400	G-140.03	500	G-140.03	600	G-240.02	700	G-240.02	800	G-240.02	900	G-250.01
001	G-160.03	101	G-160.03	201	G-140.02	301	G-140.02	401	G-140.03	501	G-140.03	601	G-240.02	701	G-240.02	801	G-240.02	901	G-250.01
002	G-160.03	102	G-160.03	202	G-140.02	302	G-140.02	402	G-140.03	502	G-140.03	602	G-240.02	702	G-240.02	802	G-240.02	902	G-250.01
003	G-160.03	103	G-160.03	203	G-140.02	303	G-140.02	403	G-140.03	503	G-140.03	603	G-240.02	703	G-240.02	803	G-240.02	903	G-250.01
004	G-160.03	104	G-160.03	204	G-140.02	304	G-140.02	404	G-140.03	504	G-140.03	604	G-240.02	704	G-240.02	804	G-240.02	904	G-250.01
005	G-160.03	105	G-160.03	205	G-140.02	305	G-140.02	405	G-140.03	505	G-140.03	605	G-240.02	705	G-240.02	805	G-240.02	905	G-250.01
006	G-160.03	106	G-160.03	206	G-140.02	306	G-140.02	406	G-140.03	506	G-140.03	606	G-240.02	706	G-240.02	806	G-240.02	906	G-250.01
007	G-160.03	107	G-160.03	207	G-140.02	307	G-140.02	407	G-140.03	507	G-140.03	607	G-240.02	707	G-240.02	807	G-240.02	907	G-250.01
008	G-160.03	108	G-160.03	208	G-140.02	308	G-140.02	408	G-140.03	508	G-140.03	608	G-240.02	708	G-240.02	808	G-240.02	908	G-250.01
009	G-160.03	109	G-160.03	209	G-140.02	309	G-140.02	409	G-140.03	509	G-140.03	609	G-240.02	709	G-240.02	809	G-240.02	909	G-250.01
010	G-160.03	110	G-160.03	210	G-140.02	310	G-140.02	410	G-140.03	510	G-140.03	610	G-240.02	710	G-240.02	810	G-240.02	910	G-250.01
011	G-160.03	111	G-160.03	211	G-140.02	311	G-140.02	411	G-140.03	511	G-140.03	611	G-240.02	711	G-240.02	811	G-240.02	911	G-250.01
012	G-160.03	112	G-160.03	212	G-140.02	312	G-140.02	412	G-140.03	512	G-140.03	612	G-240.02	712	G-240.02	812	G-240.02	912	G-250.01
013	G-160.03	113	G-160.03	213	G-140.02	313	G-140.02	413	G-140.03	513	G-140.03	613	G-240.02	713	G-240.02	813	G-240.02	913	G-250.01
014	G-160.03	114	G-160.03	214	G-140.02	314	G-140.02	414	G-140.03	514	G-140.03	614	G-240.02	714	G-240.02	814	G-240.02	914	G-250.01
015	G-160.03	115	G-160.03	215	G-140.02	315	G-140.02	415	G-140.03	515	G-140.03	615	G-240.02	715	G-240.02	815	G-240.02	915	G-250.01
016	G-160.03	116	G-160.03	216	G-140.02	316	G-140.02	416	G-140.03	516	G-140.03	616	G-240.02	716	G-240.02	816	G-240.02	916	G-250.01
017	G-160.03	117	G-160.03	217	G-140.02	317	G-140.02	417	G-140.03	517	G-140.03	617	G-240.02	717	G-240.02	817	G-240.02	917	G-250.01
018	G-160.03	118	G-160.03	218	G-140.02	318	G-140.02	418	G-140.03	518	G-140.03	618	G-240.02	718	G-240.02	818	G-240.02	918	G-250.01
019	G-160.03	119	G-160.03	219	G-140.02	319	G-140.02	419	G-140.03	519	G-140.03	619	G-240.02	719	G-240.02	819	G-240.02	919	G-250.01
020	G-160.03	120	G-160.03	220	G-140.02	320	G-140.02	420	G-140.03	520	G-140.03	620	G-240.02	720	G-240.02	820	G-240.02	920	G-250.01
021	G-160.03	121	G-160.03	221	G-140.02	321	G-140.02	421	G-140.03	521	G-140.03	621	G-240.02	721	G-240.02	821	G-240.02	921	G-250.01
022	G-160.03	122	G-160.03	222	G-140.02	322	G-140.02	422	G-140.03	522	G-140.03	622	G-240.02	722	G-240.02	822	G-240.02	922	G-250.01
023	G-160.03	123	G-160.03	223	G-140.02	323	G-140.02	423	G-140.03	523	G-140.03	623	G-240.02	723	G-240.02	823	G-240.02	923	G-250.01
024	G-160.03	124	G-160.03	224	G-140.02	324	G-140.02	424	G-140.03	524	G-140.03	624	G-240.02	724		824	G-240.02	924	G-250.01
025	G-160.03	125	G-160.03	225	G-140.02	325	G-140.02	425	G-140.03	525	G-140.03	625	G-240.02	725	G-240.02	825	G-240.02	925	G-250.01
026	G-160.03	126	G-160.03	226	G-140.02	326	G-140.02	426	G-140.03	526	G-140.03	626	G-240.02	726	G-240.02	826	G-240.02	926	G-250.01
027	G-160.03	127	G-160.03	227	G-140.02	327	G-140.02	427	G-140.03	527	G-140.03	627	G-240.02	727	G-240.02	827	G-240.02	927	G-250.01
028	G-160.03	128	G-160.03	228	G-140.02	328	G-140.02	428	G-140.03	528	G-140.03	628	G-240.02	728	G-240.02	828	G-240.02	928	G-250.01
029	G-160.03	129	G-160.03	229	G-140.02	329	G-140.02	429	G-140.03	529	G-140.03	629	G-240.02	729	G-240.02	829	G-240.02	929	G-250.01
030	G-160.03	130	G-160.03	230	G-140.02	330	G-140.02	430	G-140.03	530	G-140.03	630	G-240.02	730	G-240.02	830	G-240.02	930	G-250.01
031	G-160.03	131	G-160.03	231	G-140.02	331	G-140.02	431	G-140.03	531	G-140.03	631	G-240.02	731	G-240.02	831	G-240.02	931	G-250.01
032	G-160.03	132	G-160.03	232	G-140.02	332	G-140.02	432	G-140.03	532	G-140.03	632	G-240.02	732	G-240.02	832	G-240.02	932	G-250.01
033	G-160.03	133	G-160.03	233	G-140.02	333	G-140.02	433	G-140.03	533	G-140.03	633	G-240.02	733	G-240.02	833	G-240.02	933	G-250.01
034	G-160.03	134	G-160.03	234	G-140.02	334	G-140.02	434	G-140.03	534	G-140.03	634	G-240.02	734	G-240.02	834	G-240.02	934	G-250.01
035	G-160.03	135	G-160.03	235	G-140.02	335	G-140.02	435	G-140.03	535	G-140.03	635	G-240.02	735	G-240.02	835	G-240.02	935	G-250.01
036	G-160.03	136	G-160.03	236	G-140.02	336	G-140.02	436	G-140.03	536	G-140.03	636	G-240.02	736	G-240.02	836	G-240.02	936	G-250.01
037	G-160.03	137	G-160.03	237	G-140.02	337	G-140.02	437	G-140.03	537	G-140.03	637	G-240.02	737	G-240.02	837	G-240.02	937	G-250.01
038	G-160.03	138	G-160.03	238	G-140.02	338	G-140.02	438	G-140.03	538	G-140.03	638	G-240.02	738	G-240.02	838	G-240.02	938	G-250.01
039	G-160.03	139	G-160.03	239	G-140.02	339	G-140.02	439	G-140.03	539	G-140.03	639	G-240.02	739	G-240.02	839	G-240.02	939	G-250.01
040	G-160.03	140	G-160.03	240	G-140.02	340	G-140.02	440	G-140.03	540	G-140.03	640	G-240.02	740	G-240.02	840	G-240.02	940	G-250.01
041	G-160.03	141	G-160.03	241	G-140.02	341	G-140.02	441	G-140.03	541	G-140.03	641	G-240.02	741	G-240.02	841	G-240.02	941	G-250.01
042	G-160.03	142	G-160.03	242	G-140.02	342	G-140.02	442	G-140.03	542	G-140.03	642	G-240.02	742	G-240.02	842	G-240.02	942	G-250.01
043	G-160.03	143	G-160.03	243	G-140.02	343	G-140.02	443	G-140.03	543	G-140.03	643	G-240.02	743	G-240.02	843	G-240.02	943	G-250.01
044	G-160.03	144		244	G-140.02	344	G-140.02	444	G-140.03	544		644	G-240.02	744	G-240.02	844	G-240.02	944	G-250.01
045	G-160.03	145		245	G-140.02	345	G-140.02	445	G-140.03	545		645	G-240.02	745	G-240.02	845	G-240.02	945	G-250.01
046	G-160.03	146		246	G-140.02	346	G-140.02	446	G-140.03	546		646	G-240.02	746	G-240.02	846	G-240.02	946	G-250.01
047	G-160.03	147		247	G-140.02	347	G-140.02	447	G-140.03	547		647	G-240.02	747	G-240.02	847		947	G-250.01
048	G-160.03	148		248	G-140.02	348	G-140.02	448	G-140.03	548		648	G-240.02	748	G-240.02	848		948	G-250.01
049	G-160.03	149		249	G-140.02	349	G-140.02	449	G-140.03	549		649	G-240.02	749	G-240.02	849		949	G-250.01
050	G-160.03	150		250	G-140.02	350	G-140.02	450	G-140.03	550		650	G-240.02	750	G-240.02	850	G-250.01	950	G-250.01
051	G-160.03	151		251	G-140.02	351	G-140.02	451	G-140.03	551		651	G-240.02	751	G-240.02	851	G-250.01	951	G-250.01
052	G-160.03	152		252	G-140.02	352	G-140.02	452	G-140.03	552		652	G-240.02	752	G-240.02	852	G-250.01	952	G-250.01
053	G-160.03	153		253	G-140.02	353	G-140.02	453	G-140.03	553		653	G-240.02	753	G-240.02	853	G-250.01	953	G-250.01
054	G-160.03	154		254	G-140.02	354	G-140.02	454	G-140.03	554		654	G-240.02	754	G-240.02	854	G-250.01	954	G-250.01
055	G-160.03	155		255	G-140.02	355	G-140.02	455	G-140.03	555		655	G-240.02	755	G-240.02	855	G-250.01	955	G-250.01
056	G-160.03	156		256	G-140.02	356	G-140.02	456	G-140.03	556		656	G-240.02	756	G-240.02	856	G-250.01	956	G-250.01
057	G-160.03	157		257	G-140.02	357	G-140.02	457	G-140.03	557		657	G-240.02	757	G-240.02	857	G-250.01	957	G-250.01
058	G-160.03	158		258	G-140.02	358	G-140.02	458	G-140.03	558		658	G-240.02	758	G-240.02	858	G-250.01	958	G-250.01
059	G-160.03	159		259	G-140.02	359	G-140.02	459	G-140.03	559		659	G-240.02	759	G-240.02	859	G-250.01	959	G-250.01
060	G-160.03	160		260	G-140.02	360	G-140.02	460	G-140.03	560		660	G-240.02	760	G-240.02	860	G-250.01	960	G-250.01
061	G-160.03	161		261	G-140.02	361	G-140.02	461	G-140.03	561		661	G-240.02	761	G-240.02	861	G-250.01	961	G-250.01
062	G-160.03	162		262	G-140.02	362	G-140.02	462	G-140.03	562		662	G-240.02	762	G-240.02	862	G-250.01	962	G-250.01
063	G-160.03	163		263	G-140.02	363	G-140.02	463	G-140.03	563		663	G-240.02	763	G-240.02	863	G-250.01	963	G-250.01
064	G-160.03	164		264	G-140.02	364	G-140.02	464	G-140.03	564		664	G-240.02	764	G-240.02	864	G-250.01	964	G-250.01
065	G-160.03	165		265	G-140.02	365	G-140.02	465	G-140.03	565		665	G-240.02	765	G-240.02	865	G-250.01	965	G-250.01
066	G-160.03	166		266	G-140.02	366	G-140.02	466	G-140.03	566		666	G-240.02	766	G-240.02	866	G-250.01	966	G-250.01
067	G-160.03	167		267	G-140.02	367	G-140.02	467	G-140.03	567		667	G-240.02	767	G-240.02	867	G-250.01	967	G-250.01
068	G-160.03	168		268	G-140.02	368	G-140.02	468	G-140.03	568		668	G-240.02	768	G-240.02	868	G-250.01	968	G-250.01
069	G-160.03	169		269	G-140.02	369	G-140.02	469	G-140.03	569		669	G-240.02	769	G-240.02	879	G-250.01	969	G-250.01
070	G-160.03	170		270	G-140.02	370	G-140.02	470	G-140.03	570		670	G-240.02	770	G-240.02	870	G-250.01	970	G-250.01
071	G-160.03	171		271	G-140.02	371	G-140.02	471	G-140.03	571		671	G-240.02	771	G-240.02	871	G-250.01	971	G-250.01
072	G-160.03	172		272	G-140.02	372	G-140.02	472	G-140.03	572		672	G-240.02	772	G-240.02	872	G-250.01	972	G-250.01
073	G-160.03	173		273	G-140.02	373	G-140.02	473	G-140.03	573		673	G-240.02	773	G-240.02	873	G-250.01	973	G-250.01
074	G-160.03	174		274	G-140.02	374	G-140.02	474	G-140.03	574		674	G-240.02	774	G-240.02	874	G-250.01	974	G-250.01
075	G-160.03	175	G-140.02	275	G-140.02	375	G-140.02	475	G-140.03	575	G-130.11	675	G-240.02	775	G-240.02	875	G-250.01	975	G-250.01
076	G-160.03	176	G-140.02	276	G-140.02	376	G-140.03	476	G-140.03	576	G-130.11	676	G-240.02	776	G-240.02	876	G-250.01	976	G-250.01
077	G-160.03	177	G-140.02	277	G-140.02	377	G-140.03	477	G-140.03	577	G-130.11	677	G-240.02	777	G-240.02	877	G-250.01	977	G-250.01
078	G-160.03	178	G-140.02	278	G-140.02	378	G-140.03	478	G-140.03	578	G-130.11	678	G-240.02	778	G-240.02	878	G-250.01	978	G-250.01
079	G-160.03	179	G-140.02	279	G-140.02	379	G-140.03	479	G-140.03	579	G-130.11	679	G-240.02	779	G-240.02	879	G-250.01	979	G-250.01
080	G-160.03	180	G-140.02	280	G-140.02	380	G-140.03	480	G-140.03	580	G-130.11	680	G-240.02	780	G-240.02	880	G-250.01	980	G-250.01
081	G-160.03	181	G-140.02	281	G-140.02	381	G-140.03	481	G-140.03	581	G-130.11	681	G-240.02	781	G-240.02	881	G-250.01	981	G-250.01
082	G-160.03	182	G-140.02	282	G-140.02	382	G-140.03	482	G-140.03	582	G-130.11	682	G-240.02	782	G-240.02	882	G-250.01	982	G-250.01
083	G-160.03	183	G-140.02	283	G-140.02	383	G-140.03	483	G-140.03	583	G-130.11	683	G-240.02	783	G-240.02	883	G-250.01	983	G-250.01
084	G-160.03	184	G-140.02	284	G-140.02	384	G-140.03	484	G-140.03	584	G-130.11	684	G-240.02	784	G-240.02	884	G-250.01	984	G-250.01
085	G-160.03	185	G-140.02	285	G-140.02	385	G-140.03	485	G-140.03	585	G-130.11	685	G-240.02	785	G-240.02	885	G-250.01	985	G-250.01
086	G-160.03	186	G-140.02	286	G-140.02	386	G-140.03	486	G-140.03	586	G-130.11	686	G-240.02	786	G-240.02	886	G-250.01	986	G-250.01
087	G-160.03	187	G-140.02	287	G-140.02	387	G-140.03	487	G-140.03	587	G-130.11	687	G-240.02	787	G-240.02	887	G-250.01	987	G-250.01
088	G-160.03	188	G-140.02	288	G-140.02	388	G-140.03	488	G-140.03	588	G-130.11	688	G-240.02	788	G-240.02	888	G-250.01	988	G-250.01
089	G-160.03	189	G-140.02	289	G-140.02	389	G-140.03	489	G-140.03	589	G-130.11	689	G-240.02	789	G-240.02	889	G-250.01	989	G-250.01
090	G-160.03	190	G-140.02	290	G-140.02	390	G-140.03	490	G-140.03	590	G-130.11	690	G-240.02	790	G-240.02	890	G-250.01	990	G-250.01
091	G-160.03	191	G-140.02	291	G-140.02	391	G-140.03	491	G-140.03	591	G-130.11	691	G-240.02	791	G-240.02	891	G-250.01	991	G-250.01
092	G-160.03	192	G-140.02	292	G-140.02	392	G-140.03	492	G-140.03	592	G-130.11	692	G-240.02	792	G-240.02	892	G-250.01	992	G-250.01
093	G-160.03	193	G-140.02	293	G-140.02	393	G-140.03	493	G-140.03	593	G-130.11	693	G-240.02	793	G-240.02	893	G-250.01	993	G-250.01
094	G-160.03	194	G-140.02	294	G-140.02	394	G-140.03	494	G-140.03	594	G-130.11	694	G-240.02	794	G-240.02	894	G-250.01	994	G-250.01
095	G-160.03	195	G-140.02	295	G-140.02	395	G-140.03	495	G-140.03	595	G-130.11	695	G-240.02	795	G-240.02	895	G-250.01	995	G-250.01
096	G-160.03	196	G-140.02	296	G-140.02	396	G-140.03	496	G-140.03	596	G-130.11	696	G-240.02	796	G-240.02	896	G-250.01	996	G-250.01
097	G-160.03	197	G-140.02	297	G-140.02	397	G-140.03	497	G-140.03	597	G-130.11	697	G-240.02	797	G-240.02	897	G-250.01	997	G-250.01
098	G-160.03	198	G-140.02	298	G-140.02	398	G-140.03	498	G-140.03	598	G-130.11	698	G-240.02	798	G-240.02	898	G-250.01	998	G-250.01
099	G-160.03	199	G-140.02	299	G-140.02	399	G-140.03	499	G-140.03	599		699	G-240.02	799	G-240.02	899	G-250.01	999	G-250.01

FORD MOTOR COMPANY
STANDARD PARTS

INDEX

THE TWO NUMBERS AT THE TOP OF THE NO. COLUMN ARE THE FIRST DIGITS OF THE FIVE DIGIT NUMBER AND FOLLOWING NUMBERS IN THE COLUMN ARE THE LAST THREE DIGITS OF THE FIVE DIGIT NUMBER.

No.	Page	No.	Page	No.	Page	No.	Page	No.	Page	No.	Page	No.	Page	No.	Page	No.	Page	No.	Page
63		63		63		63		63		63		63		63		63		63	
000	G-250.01	100	G-250.01	200	G-250.01	300	G-350.02	400	G-350.02	500		600		700		800	G-353.01	900	G-353.01
001	G-250.01	101	G-250.01	201	G-250.01	301	G-350.02	401	G-350.02	501		601		701		801	G-353.01	901	G-353.01
002	G-250.01	102	G-250.01	202	G-250.01	302	G-350.02	402	G-350.02	502		602		702		802	G-353.01	902	G-353.01
003	G-250.01	103	G-250.01	203	G-250.01	303	G-350.02	403	G-350.02	503		603		703		803	G-353.01	903	G-353.01
004	G-250.01	104	G-250.01	204	G-250.01	304	G-350.02	404	G-350.02	504		604		704		804	G-353.01	904	G-353.01
005	G-250.01	105	G-250.01	205	G-250.01	305	G-350.02	405	G-350.02	505		605		705		805	G-353.01	905	G-353.01
006	G-250.01	106	G-250.01	206	G-250.01	306	G-350.02	406	G-350.02	506		606		706		806	G-353.01	906	G-353.01
007	G-250.01	107	G-250.01	207	G-250.01	307	G-350.02	407	G-350.02	507		607		707		807	G-353.01	907	G-353.01
008	G-250.01	108	G-250.01	208	G-250.01	308	G-350.02	408	G-350.02	508		608		708		808	G-353.01	908	G-353.01
009	G-250.01	109	G-250.01	209	G-250.01	309	G-350.02	409	G-350.02	509		609		709		809	G-353.01	909	G-353.01
010	G-250.01	110	G-250.01	210	G-250.01	310	G-350.02	410	G-350.02	510		610		710		810	G-353.01	910	G-353.01
011	G-250.01	111	G-250.01	211	G-250.01	311	G-350.02	411	G-350.02	511		611		711		811	G-353.01	911	G-353.01
012	G-250.01	112	G-250.01	212	G-250.01	312	G-350.02	412	G-350.02	512		612		712		812	G-353.01	912	G-353.01
013	G-250.01	113	G-250.01	213	G-250.01	313	G-350.02	413	G-350.02	513		613		713		813	G-353.01	913	G-353.01
014	G-250.01	114	G-250.01	214	G-250.01	314	G-350.02	414	G-350.02	514		614		714		814	G-353.01	914	G-353.01
015	G-250.01	115	G-250.01	215	G-250.01	315	G-350.02	415	G-350.02	515		615		715		815	G-353.01	915	G-353.01
016	G-250.01	116	G-250.01	216	G-250.01	316	G-350.02	416	G-350.02	516		616		716		816	G-353.01	916	G-353.01
017	G-250.01	117	G-250.01	217	G-250.01	317	G-350.02	417	G-350.02	517		617		717		817	G-353.01	917	G-353.01
018	G-250.01	118	G-250.01	218	G-250.01	318	G-350.02	418	G-350.02	518		618		718		818	G-353.01	918	G-353.01
019	G-250.01	119	G-250.01	219	G-250.01	319	G-350.02	419	G-350.02	519		619		719		819	G-353.01	919	G-353.01
020	G-250.01	120	G-250.01	220	G-250.01	320	G-350.02	420	G-350.02	520		620		720		820	G-353.01	920	G-353.01
021	G-250.01	121	G-250.01	221	G-250.01	321	G-350.02	421	G-350.02	521		621		721		821	G-353.01	921	G-353.01
022	G-250.01	122	G-250.01	222	G-250.01	322	G-350.02	422	G-350.02	522		622		722		822	G-353.01	922	G-353.01
023	G-250.01	123	G-250.01	223	G-250.01	323	G-350.02	423	G-350.02	523		623		723		823	G-353.01	923	G-353.01
024	G-250.01	124	G-250.01	224	G-250.01	324	G-350.02	424	G-350.02	524		624		724		824	G-353.01	924	G-353.01
025	G-250.01	125	G-250.01	225	G-250.01	325	G-350.02	425	G-350.02	525		625		725		825	G-353.01	925	
026	G-250.01	126	G-250.01	226	G-250.01	326	G-350.02	426	G-350.02	526		626		726		826	G-353.01	926	
027	G-250.01	127	G-250.01	227	G-250.01	327	G-350.02	427	G-350.02	527		627		727		827	G-353.01	927	
028	G-250.01	128	G-250.01	228	G-250.01	328	G-350.02	428	G-350.02	528		628		728		828	G-353.01	928	
029	G-250.01	129	G-250.01	229	G-250.01	329	G-350.02	429	G-350.02	529		629		729		829	G-353.01	929	
030	G-250.01	130	G-250.01	230	G-250.01	330	G-350.02	430	G-350.02	530		630		730		830	G-353.01	930	
031	G-250.01	131	G-250.01	231	G-250.01	331	G-350.02	431	G-350.02	531		631		731		831	G-353.01	931	
032	G-250.01	132	G-250.01	232	G-250.01	332	G-350.02	432	G-350.02	532		632		732		832	G-353.01	932	
033	G-250.01	133	G-250.01	233	G-250.01	333	G-350.02	433	G-350.02	533		633		733		833	G-353.01	933	
034	G-250.01	134	G-250.01	234	G-250.01	334	G-350.02	434	G-350.02	534		634		734		834	G-353.01	934	
035	G-250.01	135	G-250.01	235	G-250.01	335	G-350.02	435	G-350.02	535		635		735		835	G-353.01	935	
036	G-250.01	136	G-250.01	236	G-250.01	336	G-350.02	436	G-350.02	536		636		736		836	G-353.01	936	
037	G-250.01	137	G-250.01	237	G-250.01	337	G-350.02	437	G-350.02	537		637		737		837	G-353.01	937	
038	G-250.01	138	G-250.01	238	G-250.01	338	G-350.02	438	G-350.02	538		638		738		838	G-353.01	938	
039		139	G-250.01	239	G-350.02	339	G-350.02	439	G-350.02	539		639		739		839	G-353.01	939	
040		140	G-250.01	240	G-350.02	340	G-350.02	440	G-350.02	540		640		740		840	G-353.01	940	
041		141	G-250.01	241	G-350.02	341	G-350.02	441	G-350.02	541		641		741		841	G-353.01	941	
042		142	G-250.01	242	G-350.02	342	G-350.02	442	G-350.02	542		642		742		842	G-353.01	942	
043		143	G-250.01	243	G-353.01	343	G-350.02	443	G-350.02	543		643		743		843	G-353.01	943	
044		144	G-250.01	244	G-353.01	344	G-350.02	444	G-350.02	544		644		744		844	G-353.01	944	
045		145	G-250.01	245	G-353.01	345	G-350.02	445	G-350.02	545		645		745	G-350.02	845	G-353.01	945	
046		146	G-250.01	246	G-353.01	346	G-350.02	446	G-350.02	546		646		746	G-350.02	846	G-353.01	946	
047		147	G-250.01	247		347	G-350.02	447	G-350.02	547		647		747	G-350.02	847	G-353.01	947	
048		148	G-250.01	248		348	G-350.02	448	G-350.02	548		648		748	G-350.02	848	G-353.01	948	
049		149	G-250.01	249		349	G-350.02	449	G-350.02	549		649		749	G-350.02	849	G-353.01	949	
050	G-250.01	150	G-250.01	250		350	G-350.02	450	G-350.02	550		650		750	G-350.02	850	G-353.01	950	
051	G-250.01	151	G-250.01	251		351	G-350.02	451	G-350.02	551		651		751	G-350.02	851	G-353.01	951	
052	G-250.01	152	G-250.01	252		352	G-350.02	452	G-350.02	552		652		752	G-350.02	852	G-353.01	952	
053	G-250.01	153	G-250.01	253		353	G-350.02	453	G-350.02	553		653		753	G-350.02	853	G-353.01	953	
054	G-250.01	154	G-250.01	254		354	G-350.02	454	G-350.02	554		654		754	G-350.02	854	G-353.01	954	
055	G-250.01	155	G-250.01	255		355	G-350.02	455	G-350.02	555		655		755	G-350.02	855	G-353.01	955	
056	G-250.01	156	G-250.01	256		356	G-350.02	456	G-350.02	556		656		756	G-350.02	856	G-353.01	956	
057	G-250.01	157	G-250.01	257		357	G-350.02	457	G-350.02	557		657		757	G-350.02	857	G-353.01	957	
058	G-250.01	158	G-250.01	258		358	G-350.02	458	G-350.02	558		658		758	G-350.02	858	G-353.01	958	
059	G-250.01	159	G-250.01	259		359	G-350.02	459	G-350.02	559		659		759	G-350.02	859	G-353.01	959	
060	G-250.01	160	G-250.01	260		360	G-350.02	460	G-350.02	560		660		760	G-350.02	860	G-353.01	960	
061	G-250.01	161	G-250.01	261		361	G-350.02	461	G-350.02	561		661		761	G-350.02	861	G-353.01	961	
062	G-250.01	162	G-250.01	262		362	G-350.02	462	G-350.02	562		662		762	G-350.02	862	G-353.01	962	
063	G-250.01	163	G-250.01	263		363	G-350.02	463	G-350.02	563		663		763	G-350.02	863	G-353.01	963	
064	G-250.01	164	G-250.01	264		364	G-350.02	464	G-350.02	564		664		764	G-353.01	864	G-353.01	964	
065	G-250.01	165	G-250.01	265		365	G-350.02	465	G-350.02	565		665		765	G-353.01	865	G-353.01	965	
066	G-250.01	166	G-250.01	266		366	G-350.02	466	G-350.02	566		666		766	G-353.01	866	G-353.01	966	
067	G-250.01	167	G-250.01	267		367	G-350.02	467	G-350.02	567		667		767	G-353.01	867	G-353.01	967	
068	G-250.01	168	G-250.01	268		368	G-350.02	468	G-350.02	568		668		768	G-353.01	868	G-353.01	968	
069	G-250.01	169	G-250.01	269		369	G-350.02	469	G-350.02	569		669		769	G-353.01	879	G-353.01	969	
070	G-250.01	170	G-250.01	270		370	G-350.02	470	G-350.02	570		670		770	G-353.01	870	G-353.01	970	
071	G-250.01	171	G-250.01	271		371	G-350.02	471	G-350.02	571		671		771	G-353.01	871	G-353.01	971	
072	G-250.01	172	G-250.01	272		372	G-350.02	472	G-350.02	572		672		772	G-353.01	872	G-353.01	972	
073	G-250.01	173	G-250.01	273		373	G-350.02	473	G-350.02	573		673		773	G-353.01	873	G-353.01	973	
074	G-250.01	174	G-250.01	274		374	G-350.02	474	G-350.02	574		674		774	G-353.01	874	G-353.01	974	
075	G-250.01	175	G-250.01	275		375	G-350.02	475	G-350.02	575		675		775	G-353.01	875	G-353.01	975	
076	G-250.01	176	G-250.01	276		376	G-350.02	476	G-350.02	576		676		776	G-353.01	876	G-353.01	976	
077	G-250.01	177	G-250.01	277		377	G-350.02	477	G-350.02	577		677		777	G-353.01	877	G-353.01	977	
078	G-250.01	178	G-250.01	278		378	G-350.02	478	G-350.02	578		678		778	G-353.01	878	G-353.01	978	
079	G-250.01	179	G-250.01	279		379	G-350.02	479	G-350.02	579		679		779	G-353.01	879	G-353.01	979	
080	G-250.01	180	G-250.01	280		380	G-350.02	480	G-350.02	580		680		780	G-353.01	880	G-353.01	980	
081	G-250.01	181	G-250.01	281	G-350.02	381	G-350.02	481	G-350.02	581		681		781	G-353.01	881	G-353.01	981	
082	G-250.01	182	G-250.01	282	G-350.02	382	G-350.02	482	G-350.02	582		682		782	G-353.01	882	G-353.01	982	
083	G-250.01	183	G-250.01	283	G-350.02	383	G-350.02	483	G-350.02	583		683		783	G-353.01	883	G-353.01	983	
084	G-250.01	184	G-250.01	284	G-350.02	384	G-350.02	484	G-350.02	584		684		784	G-353.01	884	G-353.01	984	
085	G-250.01	185	G-250.01	285	G-350.02	385	G-350.02	485	G-350.02	585		685		785	G-353.01	885	G-353.01	985	
086	G-250.01	186	G-250.01	286	G-350.02	386	G-350.02	486	G-350.02	586		686		786	G-353.01	886	G-353.01	986	
087	G-250.01	187	G-250.01	287	G-350.02	387	G-350.02	487	G-350.02	587		687		787	G-353.01	887	G-353.01	987	
088	G-250.01	188	G-250.01	288	G-350.02	388	G-350.02	488	G-350.02	588		688		788	G-353.01	888	G-353.01	988	
089	G-250.01	189	G-250.01	289	G-350.02	389	G-350.02	489	G-350.02	589		689		789	G-353.01	889	G-353.01	989	
090	G-250.01	190	G-250.01	290	G-350.02	390	G-350.02	490	G-350.02	590		690		790	G-353.01	890	G-353.01	990	
091	G-250.01	191	G-250.01	291	G-350.02	391	G-350.02	491	G-350.02	591		691		791	G-353.01	891	G-353.01	991	
092	G-250.01	192	G-250.01	292	G-350.02	392	G-350.02	492	G-350.02	592		692		792	G-353.01	892	G-353.01	992	
093	G-250.01	193	G-250.01	293	G-350.02	393	G-350.02	493	G-350.02	593		693		793	G-353.01	893	G-353.01	993	
094	G-250.01	194	G-250.01	294	G-350.02	394	G-350.02	494	G-350.02	594		694		794	G-353.01	894	G-353.01	994	
095	G-250.01	195	G-250.01	295	G-350.02	395	G-350.02	495		595		695		795	G-353.01	895	G-353.01	995	
096	G-250.01	196	G-250.01	296	G-350.02	396	G-350.02	496		596		696		796	G-353.01	896	G-353.01	996	
097	G-250.01	197	G-250.01	297	G-350.02	397	G-350.02	497		597		697		797	G-353.01	897	G-353.01	997	
098	G-250.01	198	G-250.01	298	G-350.02	398	G-350.02	498		598		698		798	G-353.01	898	G-353.01	998	
099	G-250.01	199	G-250.01	299	G-350.02	399	G-350.02	499		599		699		799	G-353.01	899	G-353.01	999	

FORD MOTOR COMPANY
STANDARD PARTS

INDEX

THE TWO NUMBERS AT THE TOP OF THE NO. COLUMN ARE THE FIRST DIGITS OF THE FIVE DIGIT NUMBER AND FOLLOWING NUMBERS IN THE COLUMN ARE THE LAST THREE DIGITS OF THE FIVE DIGIT NUMBER.

No.	Page	No.	Page	No.	Page	No.	Page	No.	Page	No.	Page	No.	Page	No.	Page	No.	Page	No.	Page
64		64		64		64		64		64		64		64		64		64	
000		100	G-353.01	200	G-340.02	300	G-340.02	400		500		600	G-450.02	700	G-343.01	800		900	
001		101	G-353.01	201	G-340.02	301	G-340.02	401		501		601	G-450.02	701	G-343.01	801		901	
002		102	G-340.02	202	G-340.02	302	G-340.02	402		502		602	G-450.02	702	G-343.01	802		902	
003		103	G-340.02	203	G-340.02	303	G-340.02	403		503		603	G-450.02	703	G-343.01	803		903	
004		104	G-340.02	204	G-340.02	304	G-340.02	404		504		604	G-450.02	704	G-343.01	804		904	
005		105	G-340.02	205	G-340.02	305	G-340.02	405		505		605	G-450.02	705	G-343.01	805	G-450.02	905	
006		106	G-340.02	206	G-340.02	306	G-340.02	406		506		606	G-450.02	706	G-343.01	806		906	
007		107	G-340.02	207	G-340.02	307	G-340.02	407		507		607	G-450.02	707	G-343.01	807		907	
008		108	G-340.02	208	G-340.02	308	G-340.02	408		508		608	G-450.02	708	G-343.01	808	G-450.02	908	
009		109	G-340.02	209	G-340.02	309	G-340.02	409		509		609	G-450.02	709	G-343.01	809		909	
010		110	G-340.02	210	G-340.02	310	G-340.02	410		510		610	G-450.02	710	G-343.01	810		910	
011		111	G-450.02	211	G-340.02	311	G-340.02	411		511		611	G-450.02	711	G-343.01	811		911	
012		112	G-450.02	212	G-340.02	312	G-340.02	412		512		612	G-450.02	712	G-343.01	812		912	
013		113	G-450.02	213	G-340.02	313	G-340.02	413		513		613	G-450.02	713	G-343.01	813	G-450.02	913	
014		114	G-450.02	214	G-340.02	314	G-340.02	414		514		614	G-450.02	714	G-343.01	814		914	
015		115	G-340.02	215	G-340.02	315	G-340.02	415		515		615	G-450.02	715	G-343.01	815		915	
016		116	G-450.02	216	G-340.02	316	G-340.02	416		516		616	G-450.02	716	G-343.01	816	G-450.02	916	
017		117	G-450.02	217	G-340.02	317	G-340.02	417		517		617	G-450.02	717	G-343.01	817		917	
018		118	G-450.02	218	G-340.02	318	G-340.02	418		518		618	G-450.02	718	G-343.01	818		918	
019		119	G-450.02	219	G-340.02	319	G-340.02	419		519		619	G-450.02	719	G-343.01	819		919	
020		120	G-450.02	220	G-340.02	320	G-340.02	420		520		620	G-450.02	720	G-343.01	820		920	
021		121	G-450.02	221	G-340.02	321	G-340.02	421		521		621	G-450.02	721	G-343.01	821	G-450.02	921	
022		122	G-450.02	222	G-340.02	322	G-340.02	422		522		622	G-450.02	722	G-343.01	822		922	
023		123	G-450.02	223	G-340.02	323	G-340.02	423		523		623	G-450.02	723	G-343.01	823		923	
024		124	G-450.02	224	G-340.02	324	G-340.02	424		524		624	G-450.02	724	G-343.01	824	G-450.02	924	
025		125	G-450.02	225	G-340.02	325	G-340.02	425		525		625	G-450.02	725	G-343.01	825		925	
026		126	G-450.02	226	G-340.02	326	G-340.02	426		526		626	G-450.02	726	G-343.01	826		926	
027		127	G-450.02	227	G-340.02	327	G-340.02	427		527		627		727	G-343.01	827		927	
028		128	G-340.02	228	G-340.02	328	G-340.02	428		528		628	G-343.01	728	G-343.01	828		928	
029		129	G-340.02	229	G-340.02	329	G-340.02	429		529		629	G-343.01	729	G-343.01	829	G-450.02	929	
030		130	G-340.02	230	G-340.02	330	G-340.02	430		530		630	G-343.01	730	G-343.01	830		930	
031		131	G-340.02	231	G-340.02	331	G-340.02	431		531		631	G-343.01	731	G-343.01	831		931	
032		132	G-340.02	232	G-340.02	332	G-340.02	432		532		632	G-343.01	732	G-343.01	832	G-450.02	932	
033		133	G-340.02	233	G-340.02	333	G-340.02	433		533		633	G-343.01	733	G-343.01	833		933	
034		134	G-340.02	234	G-340.02	334	G-340.02	434		534		634	G-343.01	734	G-343.01	834		934	
035		135	G-340.02	235	G-340.02	335	G-340.02	435		535		635	G-343.01	735	G-343.01	835		935	
036		136	G-340.02	236	G-340.02	336	G-340.02	436		536		636	G-343.01	736	G-343.01	836		936	
037		137	G-340.02	237	G-340.02	337	G-340.02	437		537		637	G-343.01	737	G-343.01	837	G-450.02	937	
038		138	G-340.02	238	G-340.02	338	G-340.02	438		538		638	G-343.01	738	G-343.01	838		938	
039		139	G-340.02	239	G-340.02	339	G-340.02	439		539		639	G-343.01	739	G-343.01	839		939	
040		140	G-340.02	240	G-340.02	340	G-340.02	440		540		640	G-343.01	740	G-343.01	840	G-450.02	940	
041		141	G-340.02	241	G-340.02	341	G-340.02	441		541		641	G-343.01	741	G-343.01	841		941	
042		142	G-340.02	242	G-340.02	342	G-450.02	442		542		642	G-343.01	742	G-343.01	842		942	
043		143	G-340.02	243	G-340.02	343	G-450.02	443		543		643	G-343.01	743	G-343.01	843		943	
044		144	G-340.02	244	G-340.02	344	G-450.02	444		544		644	G-343.01	744	G-343.01	844		944	
045		145	G-340.02	245	G-340.02	345	G-450.02	445		545		645	G-343.01	745	G-343.01	845	G-450.02	945	
046		146	G-340.02	246	G-340.02	346	G-450.02	446		546		646	G-343.01	746	G-343.01	846		946	
047		147	G-340.02	247	G-340.02	347	G-450.02	447		547		647	G-343.01	747	G-343.01	847		947	
048		148	G-340.02	248	G-340.02	348	G-450.02	448		548		648	G-343.01	748	G-343.01	848	G-450.02	948	
049		149	G-340.02	249	G-340.02	349	G-450.02	449		549		649	G-343.01	749	G-343.01	849		949	
050		150	G-340.02	250	G-340.02	350	G-450.02	450		550		650	G-343.01	750	G-343.01	850		950	
051		151	G-340.02	251	G-340.02	351	G-450.02	451		551		651	G-343.01	751	G-343.01	851		951	
052		152	G-340.02	252	G-340.02	352	G-450.02	452		552		652	G-343.01	752	G-343.01	852		952	
053		153	G-340.02	253	G-340.02	353	G-450.02	453		553		653	G-343.01	753	G-343.01	853	G-450.02	953	
054		154	G-340.02	254	G-340.02	354	G-450.02	454		554		654	G-343.01	754	G-343.01	854		954	
055		155	G-340.02	255	G-340.02	355	G-450.02	455		555		655	G-343.01	755	G-343.01	855		955	
056		156	G-340.02	256	G-340.02	356	G-450.02	456		556		656	G-343.01	756	G-343.01	856	G-450.02	956	
057		157	G-340.02	257	G-340.02	357	G-450.02	457		557		657	G-343.01	757	G-343.01	857		957	
058		158	G-340.02	258	G-340.02	358	G-450.02	458		558		658	G-343.01	758	G-343.01	858		958	
059		159	G-340.02	259	G-340.02	359	G-450.02	459		559		659	G-343.01	759	G-343.01	859		959	
060		160	G-340.02	260	G-340.02	360		460		560		660	G-343.01	760	G-343.01	860		960	
061		161	G-340.02	261	G-340.02	361		461		561		661	G-343.01	761	G-343.01	861	G-450.02	961	G-340.02
062		162	G-340.02	262	G-340.02	362		462		562		662	G-343.01	762	G-343.01	862		962	G-340.02
063		163	G-340.02	263	G-340.02	363		463		563		663	G-343.01	763	G-343.01	863		963	G-340.02
064		164	G-340.02	264	G-340.02	364		464		564		664	G-343.01	764	G-343.01	864	G-450.02	964	G-340.02
065		165	G-340.02	265	G-340.02	365		465		565		665	G-343.01	765	G-343.01	865		965	G-340.02
066		166	G-340.02	266	G-340.02	366		466		566		666	G-343.01	766	G-343.01	866		966	G-340.02
067		167	G-340.02	267	G-340.02	367		467		567		667	G-343.01	767	G-343.01	867		967	G-340.02
068		168	G-340.02	268	G-340.02	368		468		568		668	G-343.01	768	G-343.01	868	G-450.02	968	G-340.02
069		169	G-340.02	269	G-340.02	369		469		569		669	G-343.01	769	G-343.01	879		969	G-343.01
070		170	G-340.02	270	G-340.02	370		470		570		670	G-343.01	770	G-343.01	870		970	G-343.01
071		171	G-340.02	271	G-340.02	371		471		571		671	G-343.01	771	G-343.01	871	G-450.02	971	G-343.01
072		172	G-340.02	272	G-340.02	372		472		572		672	G-343.01	772	G-343.01	872		972	G-343.01
073		173	G-340.02	273	G-340.02	373		473		573		673	G-343.01	773	G-343.01	873		973	G-343.01
074		174	G-340.02	274	G-340.02	374		474		574		674	G-343.01	774	G-343.01	874		974	G-343.01
075		175	G-340.02	275	G-340.02	375		475		575		675	G-343.01	775	G-343.01	875		975	G-343.01
076		176	G-340.02	276	G-340.02	376		476		576		676	G-343.01	776	G-343.01	876		976	G-343.01
077		177	G-340.02	277	G-340.02	377		477		577		677	G-343.01	777	G-343.01	877		977	G-343.01
078		178	G-340.02	278	G-340.02	378		478		578		678	G-343.01	778	G-343.01	878		978	G-343.01
079		179	G-340.02	279	G-340.02	379		479		579		679	G-343.01	779	G-343.01	879		979	G-343.01
080		180	G-340.02	280	G-340.02	380		480		580		680	G-343.01	780	G-343.01	880		980	G-343.01
081		181	G-340.02	281	G-340.02	381		481		581		681	G-343.01	781	G-343.01	881		981	G-343.01
082		182	G-340.02	282	G-340.02	382		482		582		682	G-343.01	782	G-343.01	882		982	G-343.01
083		183	G-340.02	283	G-340.02	383		483		583		683	G-343.01	783	G-343.01	883		983	G-343.01
084		184	G-340.02	284	G-340.02	384		484		584		684	G-343.01	784	G-343.01	884		984	G-343.01
085		185	G-340.02	285	G-340.02	385		485		585		685	G-343.01	785		885		985	G-343.01
086		186	G-340.02	286	G-340.02	386		486		586		686	G-343.01	786		886		986	G-343.01
087		187	G-340.02	287	G-340.02	387		487		587		687	G-343.01	787		887		987	
088		188	G-340.02	288	G-340.02	388		488		588		688	G-343.01	788		888		988	
089		189	G-340.02	289	G-340.02	389		489		589		689	G-343.01	789		889		989	
090		190	G-340.02	290	G-340.02	390		490		590		690	G-343.01	790		890		990	
091		191	G-340.02	291	G-340.02	391		491		591		691	G-343.01	791		891		991	
092		192	G-340.02	292	G-340.02	392		492		592	G-450.02	692	G-343.01	792		892		992	
093		193	G-340.02	293	G-340.02	393		493		593	G-450.02	693	G-343.01	793		893		993	
094		194	G-340.02	294	G-340.02	394		494		594	G-450.02	694	G-343.01	794		894		994	
095		195	G-340.02	295	G-340.02	395		495		595	G-450.02	695	G-343.01	795		895		995	
096		196	G-340.02	296	G-340.02	396		496		596	G-450.02	696	G-343.01	796		896		996	
097		197	G-340.02	297	G-340.02	397		497		597	G-450.02	697	G-343.01	797		897		997	
098		198	G-340.02	298	G-340.02	398		498		598	G-450.02	698	G-343.01	798		898		998	
099		199	G-340.02	299	G-340.02	399		499		599	G-450.02	699	G-343.01	799		899		999	

FORD MOTOR COMPANY
STANDARD PARTS

INDEX

THE TWO NUMBERS AT THE TOP OF THE NO. COLUMN ARE THE FIRST DIGITS OF THE FIVE DIGIT NUMBER AND FOLLOWING NUMBERS IN THE COLUMN ARE THE LAST THREE DIGITS OF THE FIVE DIGIT NUMBER.

No.	Page	No.	Page	No.	Page	No.	Page	No.	Page	No.	Page	No.	Page	No.	Page	No.	Page	No.	Page
65		65		65		65		65		65		65		65		65		65	
000		100	G-111.01	200		300		400		500		600		700		800		900	
001	G-111.01	101	G-111.01	201		301		401		501		601		701		801		901	
002	G-111.01	102	G-111.01	202		302		402		502		602		702		802		902	
003	G-111.01	103	G-111.01	203		303		403		503		603		703		803		903	
004	G-111.01	104	G-111.01	204		304		404		504		604		704		804		904	
005	G-111.01	105	G-111.01	205		305		405		505		605		705		805		905	
006	G-111.01	106	G-111.01	206		306		406		506		606		706		806		906	
007	G-111.01	107	G-111.01	207		307		407		507		607		707		807		907	
008	G-111.01	108	G-111.01	208		308		408		508		608		708		808		908	
009	G-111.01	109	G-111.01	209		309		409		509		609		709		809		909	
010	G-111.01	110	G-111.01	210		310		410		510		610		710		810		910	
011	G-111.01	111	G-111.01	211		311		411		511		611		711		811		911	
012	G-111.01	112	G-111.01	212		312		412		512		612		712		812		912	
013	G-111.01	113	G-111.01	213		313		413		513		613		713		813		913	
014	G-111.01	114	G-111.01	214		314		414		514		614		714		814		914	
015	G-111.01	115	G-111.01	215		315		415		515		615		715		815		915	
016	G-111.01	116	G-111.01	216		316		416		516		616		716		816		916	
017	G-111.01	117	G-111.01	217		317		417		517		617		717		817		917	
018	G-111.01	118	G-111.01	218		318		418		518		618		718		818		918	
019	G-111.01	119	G-111.01	219		319		419		519		619		719		819		919	
020	G-111.01	120	G-111.01	220		320		420		520		620		720		820		920	
021	G-111.01	121	G-111.01	221		321		421		521		621		721		821		921	
022	G-111.01	122	G-111.01	222		322		422		522		622		722		822		922	
023	G-111.01	123	G-111.01	223		323		423		523		623		723		823		923	
024	G-111.01	124	G-111.01	224		324		424		524		624		724		824		924	
025	G-111.01	125	G-111.01	225		325		425		525		625		725		825		925	
026	G-111.01	126	G-111.01	226		326		426		526		626		726		826		926	
027	G-111.01	127	G-111.01	227		327		427		527		627		727		827		927	
028	G-111.01	128		228		328		428		528		628		728		828		928	
029	G-111.01	129		229		329		429		529		629		729		829		929	
030	G-111.01	130		230		330		430		530		630		730		830		930	
031	G-111.01	131		231		331		431		531		631		731		831		931	
032	G-111.01	132		232		332		432		532		632		732		832		932	
033	G-111.01	133		233		333		433		533		633		733		833		933	
034	G-111.01	134		234		334		434		534		634		734		834		934	
035	G-111.01	135		235		335		435		535		635		735		835		935	
036	G-111.01	136		236		336		436		536		636		736		836		936	
037	G-111.01	137		237		337		437		537		637		737		837		937	
038	G-111.01	138		238		338		438		538		638		738		838		938	
039	G-111.01	139		239		339		439		539		639		739		839		939	
040	G-111.01	140		240		340		440		540		640		740		840		940	
041	G-111.01	141		241		341		441		541		641		741		841		941	
042	G-111.01	142		242		342		442		542		642		742		842		942	
043	G-111.01	143		243		343		443		543		643		743		843		943	
044	G-111.01	144		244		344		444		544		644		744		844		944	
045	G-111.01	145		245		345		445		545		645		745		845		945	
046	G-111.01	146		246		346		446		546		646		746		846		946	
047	G-111.01	147		247		347		447		547		647		747		847		947	
048	G-111.01	148		248		348		448		548		648		748		848		948	
049	G-111.01	149		249		349		449		549		649		749		849		949	
050	G-111.01	150		250		350		450		550		650		750		850		950	
051	G-111.01	151		251		351		451		551		651		751		851		951	
052	G-111.01	152		252		352		452		552		652		752		852		952	
053	G-111.01	153		253		353		453		553		653		753		853		953	
054	G-111.01	154		254		354		454		554		654		754		854		954	
055	G-111.01	155		255		355		455		555		655		755		855		955	
056	G-111.01	156		256		356		456		556		656		756		856		956	
057	G-111.01	157		257		357		457		557		657		757		857		957	
058	G-111.01	158		258		358		458		558		658		758		858		958	
059	G-111.01	159		259		359		459		559		659		759		859		959	
060	G-111.01	160		260		360		460		560		660		760		860		960	
061	G-111.01	161		261		361		461		561		661		761		861		961	
062	G-111.01	162		262		362		462		562		662		762		862		962	
063	G-111.01	163		263		363		463		563		663		763		863		963	
064	G-111.01	164		264		364		464		564		664		764		864		964	
065	G-111.01	165		265		365		465		565		665		765		865		965	
066	G-111.01	166		266		366		466		566		666		766		866		966	
067	G-111.01	167		267		367		467		567		667		767		867		967	
068	G-111.01	168		268		368		468		568		668		768		868		968	
069	G-111.01	169		269		369		469		569		669		769		879		969	
070	G-111.01	170		270		370		470		570		670		770		870		970	
071	G-111.01	171		271		371		471		571		671		771		871		971	
072	G-111.01	172		272		372		472		572		672		772		872		972	
073	G-111.01	173		273		373		473		573		673		773		873		973	
074	G-111.01	174		274		374		474		574		674		774		874		974	
075	G-111.01	175		275		375		475		575		675		775		875		975	
076	G-111.01	176		276		376		476		576		676		776		876		976	
077	G-111.01	177		277		377		477		577		677		777		877		977	
078	G-111.01	178		278		378		478		578		678		778		878		978	
079	G-111.01	179		279		379		479		579		679		779		879		979	
080	G-111.01	180		280		380		480		580		680		780		880		980	
081	G-111.01	181		281		381		481		581		681		781		881		981	
082	G-111.01	182		282		382		482		582		682		782		882		982	
083	G-111.01	183		283		383		483		583		683		783		883		983	
084	G-111.01	184		284		384		484		584		684		784		884		984	
085	G-111.01	185		285		385		485		585		685		785		885		985	
086	G-111.01	186		286		386		486		586		686		786		886		986	
087	G-111.01	187		287		387		487		587		687		787		887		987	
088	G-111.01	188		288		388		488		588		688		788		888		988	
089	G-111.01	189		289		389		489		589		689		789		889		989	
090	G-111.01	190		290		390		490		590		690		790		890		990	
091	G-111.01	191		291		391		491		591		691		791		891		991	
092	G-111.01	192		292		392		492		592		692		792		892		992	
093	G-111.01	193		293		393		493		593		693		793		893		993	
094	G-111.01	194		294		394		494		594		694		794		894		994	
095	G-111.01	195		295		395		495		595		695		795		895		995	
096	G-111.01	196		296		396		496		596		696		796		896		996	
097	G-111.01	197		297		397		497		597		697		797		897		997	
098	G-111.01	198		298		398		498		598		698		798		898		998	
099	G-111.01	199		299		399		499		599		699		799		899		999	

FORD MOTOR COMPANY
STANDARD PARTS

INDEX

THE TWO NUMBERS AT THE TOP OF THE NO. COLUMN ARE THE FIRST DIGITS OF THE FIVE DIGIT NUMBER AND FOLLOWING NUMBERS IN THE COLUMN ARE THE LAST THREE DIGITS OF THE FIVE DIGIT NUMBER.

No.	Page	No.	Page	No.	Page	No.	Page	No.	Page	No.	Page	No.	Page	No.	Page	No.	Page	No.	Page
72		72		72		72		72		72		72		72		72		72	
000	J-110.01	100	J-110.01	200	J-160.01	300	J-160.01	400	J-130.01	500	J-130.01	600	J-130.01	700	J-130.01	800	J-130.02	900	J-130.02
001	J-110.01	101	J-110.01	201	J-160.01	301	J-160.01	401	J-130.01	501	J-130.01	601	J-130.01	701	J-130.01	801	J-130.02	901	J-130.02
002	J-110.01	102	J-110.01	202	J-160.01	302	J-160.01	402	J-130.01	502	J-130.01	602	J-130.01	702	J-130.01	802	J-130.02	902	J-130.02
003	J-110.01	103	J-110.01	203	J-160.01	303	J-160.01	403	J-130.01	503	J-130.01	603	J-130.01	703	J-130.01	803	J-130.02	903	J-130.02
004	J-110.01	104	J-110.01	204	J-160.01	304	J-160.01	404	J-130.01	504	J-130.01	604	J-130.01	704	J-130.01	804	J-130.02	904	J-130.02
005	J-110.01	105	J-110.01	205	J-160.01	305	J-160.01	405	J-130.01	505	J-130.01	605	J-130.01	705	J-130.01	805	J-130.02	905	J-130.02
006	J-110.01	106	J-110.01	206	J-160.01	306	J-160.01	406	J-130.01	506	J-130.01	606	J-130.01	706	J-130.01	806	J-130.02	906	J-130.02
007	J-110.01	107	J-110.01	207	J-160.01	307	J-160.01	407	J-130.01	507	J-130.01	607	J-130.01	707	J-130.01	807	J-130.02	907	J-130.02
008	J-110.01	108	J-110.01	208	J-160.01	308	J-160.01	408	J-130.01	508	J-130.01	608	J-130.01	708	J-130.01	808	J-130.02	908	J-130.02
009	J-110.01	109	J-110.01	209	J-160.01	309	J-160.01	409	J-130.01	509	J-130.01	609	J-130.01	709	J-130.01	809	J-130.02	909	J-130.02
010	J-110.01	110	J-110.01	210	J-160.01	310	J-160.01	410	J-130.01	510	J-130.01	610	J-130.01	710	J-130.01	810	J-130.02	910	J-130.02
011	J-110.01	111	J-110.01	211	J-160.01	311	J-160.01	411	J-130.01	511	J-130.01	611	J-130.01	711	J-130.01	811	J-130.02	911	J-130.02
012	J-110.01	112	J-110.01	212	J-160.01	312	J-160.01	412	J-130.01	512	J-130.01	612	J-130.01	712	J-130.01	812	J-130.02	912	J-130.02
013	J-110.01	113	J-110.01	213	J-160.01	313	J-160.01	413	J-130.01	513	J-130.01	613	J-130.01	713	J-130.01	813	J-130.02	913	J-130.02
014	J-110.01	114	J-110.01	214	J-160.01	314	J-160.01	414	J-130.01	514	J-130.01	614	J-130.01	714	J-130.01	814	J-130.02	914	J-130.02
015	J-110.01	115	J-110.01	215	J-160.01	315	J-160.01	415	J-130.01	515	J-130.01	615	J-130.01	715	J-130.01	815	J-130.02	915	J-130.02
016	J-110.01	116	J-110.01	216	J-160.01	316	J-160.01	416	J-130.01	516	J-130.01	616	J-130.01	716	J-130.01	816	J-130.02	916	J-130.02
017	J-110.01	117	J-110.01	217	J-160.01	317	J-160.01	417	J-130.01	517	J-130.01	617	J-130.01	717	J-130.01	817	J-130.02	917	J-130.02
018	J-110.01	118	J-110.01	218	J-160.01	318	J-160.01	418	J-130.01	518	J-130.01	618	J-130.01	718	J-130.01	818	J-130.02	918	J-130.02
019	J-110.01	119	J-110.01	219	J-160.01	319	J-160.01	419	J-130.01	519	J-130.01	619	J-130.01	719	J-130.01	819	J-130.02	919	J-130.02
020	J-110.01	120	J-110.01	220	J-160.01	320	J-160.01	420	J-130.01	520	J-130.01	620	J-130.01	720	J-130.01	820	J-130.02	920	J-130.02
021	J-110.01	121	J-110.01	221	J-160.01	321	J-160.01	421	J-130.01	521	J-130.01	621	J-130.01	721	J-130.01	821	J-130.02	921	J-130.02
022	J-110.01	122	J-110.01	222	J-160.01	322	J-160.01	422	J-130.01	522	J-130.01	622	J-130.01	722	J-130.01	822	J-130.02	922	J-130.02
023	J-110.01	123	J-110.01	223	J-160.01	323	J-160.01	423	J-130.01	523	J-130.01	623	J-130.01	723	J-130.01	823	J-130.02	923	J-130.02
024	J-110.01	124	J-110.01	224	J-160.01	324	J-160.01	424	J-130.01	524	J-130.01	624	J-130.01	724	J-130.01	824	J-130.02	924	J-130.02
025	J-110.01	125	J-110.01	225	J-160.01	325	J-160.01	425	J-130.01	525	J-130.01	625	J-130.01	725	J-130.01	825	J-130.02	925	J-130.02
026	J-110.01	126	J-110.01	226	J-160.01	326	J-160.01	426	J-130.01	526	J-130.01	626	J-130.01	726	J-130.01	826	J-130.02	926	J-130.02
027	J-110.01	127	J-110.01	227	J-160.01	327		427	J-130.01	527	J-130.01	627	J-130.01	727	J-130.01	827	J-130.02	927	J-130.02
028	J-110.01	128	J-110.01	228	J-160.01	328	J-160.01	428	J-130.01	528	J-130.01	628	J-130.01	728	J-130.01	828	J-130.02	928	J-130.02
029	J-110.01	129	J-110.01	229	J-160.01	329	J-160.01	429	J-130.01	529	J-130.01	629	J-130.01	729	J-130.01	829	J-130.02	929	J-130.02
030	J-110.01	130	J-110.01	230	J-160.01	330	J-160.01	430	J-130.01	530	J-130.01	630	J-130.01	730	J-130.01	830	J-130.02	930	J-130.02
031	J-110.01	131	J-110.01	231	J-160.01	331	J-160.01	431	J-130.01	531	J-130.01	631	J-130.01	731	J-130.01	831	J-130.02	931	J-130.02
032	J-110.01	132	J-110.01	232	J-160.01	332	J-160.01	432	J-130.01	532	J-130.01	632	J-130.01	732	J-130.01	832	J-130.02	932	J-130.02
033	J-110.01	133	J-110.01	233	J-160.01	333		433	J-130.01	533	J-130.01	633	J-130.01	733	J-130.01	833	J-130.02	933	J-130.02
034	J-110.01	134	J-110.01	234	J-160.01	334	J-160.01	434	J-130.01	534	J-130.01	634	J-130.01	734	J-130.01	834	J-130.02	934	J-130.02
035	J-110.01	135	J-110.01	235	J-160.01	335	J-160.01	435	J-130.01	535	J-130.01	635	J-130.01	735	J-130.01	835	J-130.02	935	J-130.02
036	J-110.01	136	J-110.01	236	J-160.01	336	J-160.01	436	J-130.01	536	J-130.01	636	J-130.01	736	J-130.01	836	J-130.02	936	J-130.02
037	J-110.01	137	J-110.01	237	J-160.01	337	J-160.01	437	J-130.01	537	J-130.01	637	J-130.01	737	J-130.01	837	J-130.02	937	J-130.02
038	J-110.01	138	J-110.01	238	J-160.01	338	J-160.01	438	J-130.01	538	J-130.01	638	J-130.01	738	J-130.01	838	J-130.02	938	J-130.02
039	J-110.01	139	J-110.01	239	J-160.01	339		439	J-130.01	539	J-130.01	639	J-130.01	739	J-130.01	839	J-130.02	939	J-130.02
040	J-110.01	140	J-110.01	240	J-160.01	340	J-160.01	440	J-130.01	540	J-130.01	640	J-130.01	740	J-130.01	840	J-130.02	940	J-130.02
041	J-110.01	141	J-110.01	241	J-160.01	341	J-160.01	441	J-130.01	541	J-130.01	641	J-130.01	741	J-130.01	841	J-130.02	941	J-130.02
042	J-110.01	142	J-110.01	242	J-160.01	342	J-160.01	442	J-130.01	542	J-130.01	642	J-130.01	742	J-130.01	842	J-130.02	942	J-130.02
043	J-110.01	143	J-110.01	243	J-160.01	343	J-160.01	443	J-130.01	543	J-130.01	643	J-130.01	743	J-130.01	843	J-130.02	943	J-130.02
044	J-110.01	144	J-110.01	244	J-160.01	344	J-160.01	444	J-130.01	544	J-130.01	644	J-130.01	744	J-130.01	844	J-130.02	944	J-130.02
045	J-110.01	145	J-110.01	245	J-160.01	345		445	J-130.01	545	J-130.01	645	J-130.01	745	J-130.01	845	J-130.02	945	J-130.02
046	J-110.01	146	J-110.01	246	J-160.01	346		446	J-130.01	546	J-130.01	646	J-130.01	746	J-130.01	846	J-130.02	946	J-130.02
047	J-110.01	147	J-110.01	247	J-160.01	347		447	J-130.01	547	J-130.01	647	J-130.01	747	J-130.01	847	J-130.02	947	J-130.02
048	J-110.01	148	J-110.01	248	J-160.01	348		448	J-130.01	548	J-130.01	648	J-130.01	748	J-130.01	848	J-130.02	948	J-130.02
049	J-110.01	149	J-110.01	249	J-160.01	349		449	J-130.01	549	J-130.01	649	J-130.01	749	J-130.01	849	J-130.02	949	J-130.02
050	J-110.01	150	J-110.01	250	J-160.01	350	J-130.01	450	J-130.01	550		650	J-130.01	750	J-130.01	850	J-130.02	950	J-130.02
051	J-110.01	151	J-110.01	251	J-160.01	351	J-130.01	451	J-130.01	551		651	J-130.01	751	J-130.01	851	J-130.02	951	J-130.02
052	J-110.01	152	J-110.01	252	J-160.01	352	J-130.01	452	J-130.01	552		652	J-130.01	752	J-130.01	852	J-130.02	952	J-130.02
053	J-110.01	153	J-110.01	253	J-160.01	353	J-130.01	453	J-130.01	553		653	J-130.01	753	J-130.01	853	J-130.02	953	J-130.02
054	J-110.01	154	J-110.01	254	J-160.01	354	J-130.01	454	J-130.01	554		654	J-130.01	754	J-130.01	854	J-130.02	954	J-130.02
055	J-110.01	155	J-110.01	255	J-160.01	355	J-130.01	455	J-130.01	555		655	J-130.01	755	J-130.01	855	J-130.02	955	J-130.02
056	J-110.01	156	J-110.01	256	J-160.01	356	J-130.01	456	J-130.01	556		656	J-130.01	756	J-130.01	856	J-130.02	956	J-130.02
057	J-110.01	157	J-110.01	257	J-160.01	357	J-130.01	457	J-130.01	557		657	J-130.01	757	J-130.01	857	J-130.02	957	J-130.02
058	J-110.01	158	J-110.01	258	J-160.01	358	J-130.01	458	J-130.01	558		658	J-130.01	758	J-130.01	858	J-130.02	958	J-130.02
059	J-110.01	159	J-110.01	259	J-160.01	359	J-130.01	459	J-130.01	559		659	J-130.01	759	J-130.01	859	J-130.02	959	J-130.02
060	J-110.01	160	J-110.01	260	J-160.01	360	J-130.01	460	J-130.01	560		660	J-130.01	760	J-130.01	860	J-130.02	960	J-130.02
061	J-110.01	161	J-110.01	261	J-160.01	361	J-130.01	461	J-130.01	561		661	J-130.01	761	J-130.01	861	J-130.02	961	J-130.02
062	J-110.01	162	J-110.01	262	J-160.01	362	J-130.01	462	J-130.01	562		662	J-130.01	762	J-130.01	862	J-130.02	962	J-130.02
063	J-110.01	163	J-110.01	263	J-160.01	363	J-130.01	463	J-130.01	563		663	J-130.01	763	J-130.01	863	J-130.02	963	J-130.02
064	J-110.01	164	J-110.01	264	J-160.01	364	J-130.01	464	J-130.01	564		664	J-130.01	764	J-130.01	864	J-130.02	964	J-130.02
065	J-110.01	165	J-110.01	265	J-160.01	365	J-130.01	465	J-130.01	565		665	J-130.01	765	J-130.01	865	J-130.02	965	J-130.02
066	J-110.01	166	J-110.01	266	J-160.01	366	J-130.01	466	J-130.01	566		666	J-130.01	766	J-130.01	866	J-130.02	966	J-130.02
067	J-110.01	167	J-110.01	267	J-160.01	367	J-130.01	467	J-130.01	567		667	J-130.01	767	J-130.01	867	J-130.02	967	J-130.02
068	J-110.01	168	J-110.01	268	J-160.01	368	J-130.01	468	J-130.01	568		668	J-130.01	768	J-130.01	868	J-130.02	968	J-130.02
069	J-110.01	169	J-110.01	269	J-160.01	369	J-130.01	469	J-130.01	569		669	J-130.01	769	J-130.01	879	J-130.02	969	J-130.02
070	J-110.01	170	J-110.01	270	J-160.01	370	J-130.01	470	J-130.01	570		670	J-130.01	770	J-130.01	870	J-130.02	970	J-130.02
071	J-110.01	171	J-110.01	271	J-160.01	371	J-130.01	471	J-130.01	571		671	J-130.01	771	J-130.01	871	J-130.02	971	J-130.02
072	J-110.01	172	J-110.01	272	J-160.01	372	J-130.01	472	J-130.01	572		672	J-130.01	772	J-130.01	872	J-130.02	972	J-130.02
073	J-110.01	173	J-110.01	273	J-160.01	373	J-130.01	473	J-130.01	573		673	J-130.01	773	J-130.01	873	J-130.02	973	J-130.02
074	J-110.01	174		274	J-160.01	374	J-130.01	474	J-130.01	574		674	J-130.01	774	J-130.01	874	J-130.02	974	J-130.02
075	J-110.01	175	J-160.01	275	J-160.01	375	J-130.01	475	J-130.01	575	J-130.01	675	J-130.01	775	J-130.02	875	J-130.02	975	
076	J-110.01	176	J-160.01	276	J-160.01	376	J-130.01	476	J-130.01	576	J-130.01	676	J-130.01	776	J-130.02	876	J-130.02	976	
077	J-110.01	177	J-160.01	277	J-160.01	377	J-130.01	477	J-130.01	577	J-130.01	677	J-130.01	777	J-130.02	877	J-130.02	977	
078	J-110.01	178	J-160.01	278	J-160.01	378	J-130.01	478	J-130.01	578	J-130.01	678	J-130.01	778	J-130.02	878	J-130.02	978	
079	J-110.01	179	J-160.01	279	J-160.01	379	J-130.01	479	J-130.01	579	J-130.01	679	J-130.01	779	J-130.02	879	J-130.02	979	
080	J-110.01	180	J-160.01	280	J-160.01	380	J-130.01	480	J-130.01	580	J-130.01	680	J-130.01	780	J-130.02	880	J-130.02	980	
081	J-110.01	181	J-160.01	281	J-160.01	381	J-130.01	481	J-130.01	581	J-130.01	681	J-130.01	781	J-130.02	881	J-130.02	981	
082	J-110.01	182	J-160.01	282	J-160.01	382	J-130.01	482	J-130.01	582	J-130.01	682	J-130.01	782	J-130.02	882	J-130.02	982	
083	J-110.01	183	J-160.01	283	J-160.01	383	J-130.01	483	J-130.01	583	J-130.01	683	J-130.01	783	J-130.02	883	J-130.02	983	
084	J-110.01	184	J-160.01	284	J-160.01	384	J-130.01	484	J-130.01	584	J-130.01	684	J-130.01	784	J-130.02	884	J-130.02	984	
085	J-110.01	185	J-160.01	285	J-160.01	385	J-130.01	485	J-130.01	585	J-130.01	685	J-130.01	785	J-130.02	885	J-130.02	985	
086	J-110.01	186	J-160.01	286	J-160.01	386	J-130.01	486	J-130.01	586	J-130.01	686	J-130.01	786	J-130.02	886	J-130.02	986	
087	J-110.01	187	J-160.01	287	J-160.01	387	J-130.01	487	J-130.01	587	J-130.01	687	J-130.01	787	J-130.02	887	J-130.02	987	
088	J-110.01	188	J-160.01	288	J-160.01	388	J-130.01	488	J-130.01	588	J-130.01	688	J-130.01	788	J-130.02	888	J-130.02	988	
089	J-110.01	189	J-160.01	289	J-160.01	389	J-130.01	489	J-130.01	589	J-130.01	689	J-130.01	789	J-130.02	889	J-130.02	989	
090	J-110.01	190	J-160.01	290	J-160.01	390	J-130.01	490	J-130.01	590	J-130.01	690	J-130.01	790	J-130.02	890	J-130.02	990	
091	J-110.01	191	J-160.01	291	J-160.01	391	J-130.01	491	J-130.01	591	J-130.01	691	J-130.01	791	J-130.02	891	J-130.02	991	
092	J-110.01	192	J-160.01	292	J-160.01	392	J-130.01	492	J-130.01	592	J-130.01	692	J-130.01	792	J-130.02	892	J-130.02	992	
093	J-110.01	193	J-160.01	293	J-160.01	393	J-130.01	493	J-130.01	593	J-130.01	693	J-130.01	793	J-130.02	893	J-130.02	993	
094	J-110.01	194	J-160.01	294	J-160.01	394	J-130.01	494	J-130.01	594	J-130.01	694	J-130.01	794	J-130.02	894	J-130.02	994	
095	J-110.01	195	J-160.01	295	J-160.01	395	J-130.01	495	J-130.01	595	J-130.01	695	J-130.01	795	J-130.02	895	J-130.02	995	
096	J-110.01	196	J-160.01	296	J-160.01	396	J-130.01	496	J-130.01	596	J-130.01	696	J-130.01	796	J-130.02	896	J-130.02	996	
097	J-110.01	197	J-160.01	297	J-160.01	397	J-130.01	497	J-130.01	597	J-130.01	697	J-130.01	797	J-130.02	897	J-130.02	997	
098	J-110.01	198	J-160.01	298	J-160.01	398	J-130.01	498	J-130.01	598	J-130.01	698	J-130.01	798	J-130.02	898	J-130.02	998	
099	J-110.01	199	J-160.01	299	J-160.01	399	J-130.01	499	J-130.01	599	J-130.01	699	J-130.01	799	J-130.02	899	J-130.02	999	

FORD MOTOR COMPANY
STANDARD PARTS

INDEX

THE TWO NUMBERS AT THE TOP OF THE NO. COLUMN ARE THE FIRST DIGITS OF THE FIVE DIGIT NUMBER AND FOLLOWING NUMBERS IN THE COLUMN ARE THE LAST THREE DIGITS OF THE FIVE DIGIT NUMBER.

No.	Page	No.	Page	No.	Page	No.	Page	No.	Page	No.	Page	No.	Page	No.	Page	No.	Page	No.	Page
73		73		73		73		73		73		73		73		73		73	
000	J-130.02	100	J-130.02	200	J-150.02	300	J-150.02	400		500	J-150.02	600		700	J-170.01	800	J-170.01	900	J-180.02
001	J-130.02	101	J-130.02	201	J-150.02	301	J-150.02	401		501	J-150.02	601		701	J-170.01	801	J-170.01	901	J-180.02
002	J-130.02	102	J-130.02	202	J-150.02	302	J-150.02	402		502	J-150.02	602		702	J-170.01	802	J-170.01	902	J-180.03
003	J-130.02	103	J-130.02	203	J-150.02	303	J-150.02	403		503	J-150.02	603		703	J-170.01	803	J-170.01	903	J-180.03
004	J-130.02	104	J-130.02	204	J-150.02	304	J-150.02	404		504	J-150.02	604		704	J-170.01	804	J-170.01	904	J-180.03
005	J-130.02	105	J-130.02	205	J-150.02	305	J-150.02	405		505	J-150.02	605		705	J-170.01	805	J-170.01	905	J-180.03
006	J-130.02	106	J-130.02	206	J-150.02	306	J-150.02	406		506	J-150.02	606		706	J-170.01	806	J-170.01	906	J-180.03
007	J-130.02	107	J-130.02	207	J-150.02	307	J-150.02	407		507	J-150.02	607		707	J-170.01	807	J-170.01	907	J-180.03
008	J-130.02	108	J-130.02	208	J-150.02	308	J-150.02	408		508	J-150.02	608		708	J-170.01	808	J-170.01	908	J-180.03
009	J-130.02	109	J-130.02	209	J-150.02	309	J-150.02	409		509	J-150.02	609		709	J-170.01	809	J-170.01	909	J-180.03
010	J-130.02	110	J-130.02	210	J-150.02	310	J-150.02	410		510	J-150.02	610		710	J-170.01	810	J-170.01	910	J-180.03
011	J-130.02	111	J-130.02	211	J-150.02	311	J-150.02	411		511	J-150.02	611		711	J-170.01	811	J-170.01	911	J-180.03
012	J-130.02	112	J-130.02	212	J-150.02	312	J-150.02	412		512	J-150.02	612		712	J-170.01	812	J-170.01	912	J-180.03
013	J-130.02	113	J-130.02	213	J-150.02	313	J-150.02	413		513	J-150.02	613		713	J-170.01	813	J-170.01	913	J-180.03
014	J-130.02	114	J-130.02	214	J-150.02	314	J-150.02	414		514	J-150.02	614		714	J-170.01	814	J-170.01	914	J-180.03
015	J-130.02	115	J-130.02	215	J-150.02	315	J-150.02	415		515	J-150.02	615		715	J-170.01	815	J-170.01	915	J-180.03
016	J-130.02	116	J-130.02	216	J-150.02	316	J-150.02	416		516	J-150.02	616		716	J-170.01	816	J-170.01	916	J-180.03
017	J-130.02	117	J-130.02	217	J-150.02	317	J-150.02	417		517	J-150.02	617		717	J-170.01	817	J-170.01	917	J-180.03
018	J-130.02	118	J-130.02	218	J-150.02	318	J-150.02	418		518	J-150.02	618		718	J-170.01	818	J-170.01	918	J-180.03
019	J-130.02	119	J-130.02	219	J-150.02	319	J-150.02	419		519	J-150.02	619		719	J-170.01	819	J-170.01	919	J-180.03
020	J-130.02	120	J-130.02	220	J-150.02	320	J-150.02	420		520	J-150.02	620		720	J-170.01	820	J-170.01	920	J-180.03
021	J-130.02	121	J-130.02	221	J-150.02	321	J-150.02	421		521	J-150.02	621		721	J-170.01	821	J-170.01	921	J-180.03
022	J-130.02	122	J-130.02	222	J-150.02	322	J-150.02	422		522	J-150.02	622		722	J-170.01	822	J-170.01	922	J-180.03
023	J-130.02	123	J-130.02	223	J-150.02	323	J-150.02	423		523	J-150.02	623		723	J-170.01	823	J-170.01	923	J-180.03
024	J-130.02	124	J-130.02	224	J-150.02	324	J-150.02	424		524	J-150.02	624		724	J-170.01	824	J-170.01	924	J-180.03
025	J-130.02	125	J-130.02	225	J-150.02	325	J-150.02	425	J-150.02	525	J-150.02	625	J-170.01	725	J-170.01	825	J-170.01	925	J-180.03
026	J-130.02	126	J-130.02	226	J-150.02	326	J-150.02	426	J-150.02	526	J-150.02	626	J-170.01	726	J-170.01	826	J-170.01	926	J-180.03
027	J-130.02	127	J-130.02	227	J-150.02	327	J-150.02	427	J-150.02	527	J-150.02	627	J-170.01	727	J-170.01	827	J-170.01	927	J-180.03
028	J-130.02	128	J-130.02	228	J-150.02	328	J-150.02	428	J-150.02	528	J-150.02	628	J-170.01	728	J-170.01	828	J-170.01	928	J-180.03
029	J-130.02	129	J-130.02	229	J-150.02	329	J-150.02	429	J-150.02	529	J-150.02	629	J-170.01	729	J-170.01	829	J-170.01	929	J-180.03
030	J-130.02	130	J-130.02	230	J-150.02	330	J-150.02	430	J-150.02	530	J-150.02	630	J-170.01	730	J-170.01	830	J-170.01	930	J-180.03
031	J-130.02	131	J-130.02	231	J-150.02	331	J-150.02	431	J-150.02	531	J-150.02	631	J-170.01	731	J-170.01	831	J-170.01	931	J-180.03
032	J-130.02	132	J-130.02	232	J-150.02	332	J-150.02	432	J-150.02	532	J-150.02	632	J-170.01	732	J-170.01	832	J-170.01	932	J-180.03
033	J-130.02	133	J-130.02	233	J-150.02	333	J-150.02	433	J-150.02	533	J-150.02	633	J-170.01	733	J-170.01	833	J-170.01	933	J-180.03
034	J-130.02	134	J-130.02	234	J-150.02	334	J-150.02	434	J-150.02	534	J-150.02	634	J-170.01	734	J-170.01	834	J-170.01	934	J-180.03
035	J-130.02	135	J-130.02	235	J-150.02	335	J-150.02	435	J-150.02	535	J-150.02	635	J-170.01	735	J-170.01	835	J-170.01	935	J-180.03
036	J-130.02	136	J-130.02	236	J-150.02	336	J-150.02	436	J-150.02	536	J-150.02	636	J-170.01	736	J-170.01	836	J-170.01	936	J-180.03
037	J-130.02	137	J-130.02	237	J-150.02	337	J-150.02	437	J-150.02	537	J-150.02	637	J-170.01	737	J-170.01	837	J-170.01	937	J-180.03
038	J-130.02	138	J-130.02	238	J-150.02	338	J-150.02	438	J-150.02	538	J-150.02	638	J-170.01	738	J-170.01	838	J-170.01	938	J-180.03
039	J-130.02	139	J-130.02	239	J-150.02	339	J-150.02	439	J-150.02	539	J-150.02	639	J-170.01	739	J-170.01	839	J-170.01	939	J-180.04
040	J-130.02	140	J-130.02	240	J-150.02	340	J-150.02	440	J-150.02	540	J-150.02	640	J-170.01	740	J-170.01	840	J-170.01	940	J-180.04
041	J-130.02	141	J-130.02	241	J-150.02	341	J-150.02	441	J-150.02	541	J-150.02	641	J-170.01	741	J-170.01	841	J-170.01	941	J-180.04
042	J-130.02	142	J-130.02	242	J-150.02	342	J-150.02	442	J-150.02	542	J-150.02	642	J-170.01	742	J-170.01	842		942	J-180.03
043	J-130.02	143	J-130.02	243	J-150.02	343	J-150.02	443	J-150.02	543	J-150.02	643	J-170.01	743	J-170.01	843		943	J-180.03
044	J-130.02	144	J-130.02	244	J-150.02	344	J-150.02	444	J-150.02	544	J-150.02	644	J-170.01	744	J-170.01	844		944	J-180.03
045	J-130.02	145	J-130.02	245	J-150.02	345	J-150.02	445	J-150.02	545	J-150.02	645	J-170.01	745	J-170.01	845		945	J-180.03
046	J-130.02	146	J-130.02	246	J-150.02	346	J-150.02	446	J-150.02	546	J-150.02	646	J-170.01	746	J-170.01	846		946	
047	J-130.02	147	J-130.02	247	J-150.02	347	J-150.02	447	J-150.02	547	J-150.02	647	J-170.01	747	J-170.01	847		947	J-180.04
048	J-130.02	148	J-130.02	248	J-150.02	348	J-150.02	448	J-150.02	548	J-150.02	648	J-170.01	748	J-170.01	848		948	J-180.04
049	J-130.02	149	J-130.02	249	J-150.02	349	J-150.02	449	J-150.02	549	J-150.02	649	J-170.01	749	J-170.01	849		949	J-180.04
050	J-130.02	150	J-130.02	250	J-150.02	350	J-150.02	450	J-150.02	550	J-150.02	650	J-170.01	750	J-170.01	850	J-180.02	950	J-180.04
051	J-130.02	151	J-130.02	251	J-150.02	351	J-150.02	451	J-150.02	551	J-150.02	651	J-170.01	751	J-170.01	851	J-180.02	951	J-180.04
052	J-130.02	152	J-130.02	252	J-150.02	352	J-150.02	452	J-150.02	552	J-150.02	652	J-170.01	752	J-170.01	852	J-180.02	952	J-180.04
053	J-130.02	153	J-130.02	253	J-150.02	353	J-150.02	453	J-150.02	553	J-150.02	653	J-170.01	753	J-170.01	853	J-180.02	953	J-180.04
054	J-130.02	154	J-130.02	254	J-150.02	354	J-150.02	454	J-150.02	554	J-150.02	654	J-170.01	754	J-170.01	854	J-180.02	954	J-180.04
055	J-130.02	155	J-130.02	255	J-150.02	355	J-150.02	455	J-150.02	555	J-150.02	655	J-170.01	755	J-170.01	855	J-180.02	955	J-180.04
056	J-130.02	156	J-130.02	256	J-150.02	356	J-150.02	456	J-150.02	556	J-150.02	656	J-170.01	756	J-170.01	856	J-180.02	956	J-180.04
057	J-130.02	157	J-130.02	257	J-150.02	357	J-150.02	457	J-150.02	557	J-150.02	657	J-170.01	757	J-170.01	857	J-180.02	957	J-180.04
058	J-130.02	158	J-130.02	258	J-150.02	358	J-150.02	458	J-150.02	558	J-150.02	658	J-170.01	758	J-170.01	858	J-180.02	958	J-180.04
059	J-130.02	159	J-130.02	259	J-150.02	359	J-150.02	459	J-150.02	559	J-150.02	659	J-170.01	759	J-170.01	859	J-180.02	959	J-180.04
060	J-130.02	160	J-130.02	260	J-150.02	360	J-150.02	460	J-150.02	560	J-150.02	660	J-170.01	760	J-170.01	860	J-180.02	960	J-180.04
061	J-130.02	161	J-130.02	261	J-150.02	361	J-150.02	461	J-150.02	561	J-150.02	661	J-170.01	761	J-170.01	861	J-180.02	961	
062	J-130.02	162	J-130.02	262	J-150.02	362	J-150.02	462	J-150.02	562	J-150.02	662	J-170.01	762	J-170.01	862	J-180.02	962	J-180.04
063	J-130.02	163	J-130.02	263	J-150.02	363	J-150.02	463	J-150.02	563	J-150.02	663	J-170.01	763	J-170.01	863	J-180.02	963	J-180.04
064	J-130.02	164	J-130.02	264	J-150.02	364	J-150.02	464	J-150.02	564	J-150.02	664	J-170.01	764	J-170.01	864	J-180.02	964	J-180.04
065	J-130.02	165	J-130.02	265	J-150.02	365	J-150.02	465	J-150.02	565	J-150.02	665	J-170.01	765	J-170.01	865	J-180.02	965	J-180.04
066	J-130.02	166	J-130.02	266	J-150.02	366	J-150.02	466	J-150.02	566	J-150.02	666	J-170.01	766	J-170.01	866	J-180.02	966	J-180.04
067	J-130.02	167	J-130.02	267	J-150.02	367	J-150.02	467	J-150.02	567	J-150.02	667	J-170.01	767	J-170.01	867	J-180.02	967	J-180.04
068	J-130.02	168	J-130.02	268	J-150.02	368	J-150.02	468	J-150.02	568	J-150.02	668	J-170.01	768	J-170.01	868	J-180.02	968	J-180.04
069	J-130.02	169	J-130.02	269	J-150.02	369	J-150.02	469	J-150.02	569	J-150.02	669	J-170.01	769	J-170.01	879	J-180.02	969	J-180.04
070	J-130.02	170	J-130.02	270	J-150.02	370	J-150.02	470	J-150.02	570	J-150.02	670	J-170.01	770	J-170.01	870	J-180.02	970	J-180.04
071	J-130.02	171	J-130.02	271	J-150.02	371	J-150.02	471	J-150.02	571	J-150.02	671	J-170.01	771	J-170.01	871	J-180.02	971	J-180.04
072	J-130.02	172	J-130.02	272	J-150.02	372	J-150.02	472	J-150.02	572	J-150.02	672	J-170.01	772	J-170.01	872	J-180.02	972	J-180.04
073	J-130.02	173	J-130.02	273	J-150.02	373	J-150.02	473	J-150.02	573	J-150.02	673	J-170.01	773	J-170.01	873	J-180.02	973	J-180.04
074	J-130.02	174	J-130.02	274	J-150.02	374	J-150.02	474	J-150.02	574	J-150.02	674	J-170.01	774	J-170.01	874	J-180.02	974	J-180.04
075	J-130.02	175	J-130.02	275	J-150.02	375	J-150.02	475	J-150.02	575		675	J-170.01	775	J-170.01	875	J-180.02	975	J-180.04
076	J-130.02	176	J-130.02	276	J-150.02	376	J-150.02	476	J-150.02	576		676	J-170.01	776	J-170.01	876	J-180.02	976	J-180.04
077	J-130.02	177	J-130.02	277	J-150.02	377	J-150.02	477	J-150.02	577		677	J-170.01	777	J-170.01	877	J-180.02	977	J-180.04
078	J-130.02	178	J-130.02	278	J-150.02	378	J-150.02	478	J-150.02	578		678	J-170.01	778	J-170.01	878	J-180.02	978	J-180.04
079	J-130.02	179	J-130.02	279	J-150.02	379	J-150.02	479	J-150.02	579		679	J-170.01	779	J-170.01	879	J-180.02	979	J-180.04
080	J-130.02	180	J-130.02	280	J-150.02	380	J-150.02	480	J-150.02	580		680	J-170.01	780	J-170.01	880	J-180.02	980	J-180.04
081	J-130.02	181	J-130.02	281	J-150.02	381	J-150.02	481	J-150.02	581		681	J-170.01	781	J-170.01	881	J-180.02	981	J-180.04
082	J-130.02	182	J-130.02	282	J-150.02	382	J-150.02	482	J-150.02	582		682	J-170.01	782	J-170.01	882	J-180.02	982	J-180.04
083	J-130.02	183	J-130.02	283	J-150.02	383	J-150.02	483	J-150.02	583		683	J-170.01	783	J-170.01	883	J-180.02	983	
084	J-130.02	184	J-130.02	284	J-150.02	384	J-150.02	484	J-150.02	584		684	J-170.01	784	J-170.01	884	J-180.02	984	J-180.04
085	J-130.02	185	J-130.02	285	J-150.02	385	J-150.02	485	J-150.02	585		685	J-170.01	785	J-170.01	885	J-180.02	985	J-180.04
086	J-130.02	186	J-130.02	286	J-150.02	386	J-150.02	486	J-150.02	586		686	J-170.01	786	J-170.01	886	J-180.02	986	J-180.04
087	J-130.02	187	J-130.02	287	J-150.02	387	J-150.02	487	J-150.02	587		687	J-170.01	787	J-170.01	887	J-180.02	987	J-180.04
088	J-130.02	188	J-130.02	288	J-150.02	388	J-150.02	488	J-150.02	588		688	J-170.01	788	J-170.01	888	J-180.02	988	J-180.04
089	J-130.02	189	J-130.02	289	J-150.02	389	J-150.02	489	J-150.02	589		689	J-170.01	789	J-170.01	889	J-180.02	989	J-180.04
090	J-130.02	190	J-130.02	290	J-150.02	390	J-150.02	490	J-150.02	590		690	J-170.01	790	J-170.01	890	J-180.02	990	J-180.04
091	J-130.02	191	J-130.02	291	J-150.02	391	J-150.02	491	J-150.02	591		691	J-170.01	791	J-170.01	891	J-180.02	991	J-180.05
092	J-130.02	192	J-130.02	292	J-150.02	392	J-150.02	492	J-150.02	592		692	J-170.01	792	J-170.01	892	J-180.02	992	J-180.05
093	J-130.02	193	J-130.02	293	J-150.02	393	J-150.02	493	J-150.02	593		693	J-170.01	793	J-170.01	893	J-180.02	993	J-180.05
094	J-130.02	194	J-130.02	294	J-150.02	394	J-150.02	494	J-150.02	594		694	J-170.01	794	J-170.01	894	J-180.03	994	J-180.04
095	J-130.02	195	J-130.02	295	J-150.02	395	J-150.02	495	J-150.02	595		695	J-170.01	795	J-170.01	895	J-180.03	995	J-180.04
096	J-130.02	196	J-130.02	296	J-150.02	396	J-150.02	496	J-150.02	596		696	J-170.01	796	J-170.01	896	J-180.03	996	J-180.04
097	J-130.02	197	J-130.02	297	J-150.02	397	J-150.02	497	J-150.02	597		697	J-170.01	797	J-170.01	897	J-180.03	997	J-180.04
098	J-130.02	198	J-130.02	298	J-150.02	398	J-150.02	498	J-150.02	598		698	J-170.01	798	J-170.01	898	J-180.02	998	J-180.05
099	J-130.02	199	J-130.02	299	J-150.02	399	J-150.02	499	J-150.02	599		699	J-170.01	799	J-170.01	899	J-180.02	999	J-180.05

FORD MOTOR COMPANY
STANDARD PARTS

INDEX

THE TWO NUMBERS AT THE TOP OF THE NO. COLUMN ARE THE FIRST DIGITS OF THE FIVE DIGIT NUMBER AND FOLLOWING NUMBERS IN THE COLUMN ARE THE LAST THREE DIGITS OF THE FIVE DIGIT NUMBER.

No.	Page	No.	Page	No.	Page	No.	Page	No.	Page	No.	Page	No.	Page	No.	Page	No.	Page	No.	Page
74		74		74		74		74		74		74		74		74		74	
000	J-180.05	100		200	J-410.02	300		400	H-1	500	H-3	600	H-3	700	H-4	800		900	H-6
001	J-180.05	101		201	J-410.02	301		401	H-1	501	H-3	601	H-3	701	H-4	801		901	H-6
002	J-180.05	102		202	J-410.02	302		402	H-1	502	H-3	602	H-3	702	H-4	802		902	H-6
003	J-180.05	103		203	J-410.02	303		403	H-1	503	H-3	603	H-3	703	H-4	803		903	H-6
004	J-180.05	104		204	J-410.02	304		404	H-1	504	H-3	604	H-3	704	H-4	804		904	H-6
005	J-180.05	105	J-400.01	205	J-410.02	305		405	H-1	505	H-3	605	H-3	705	H-4	805	H-5	905	H-6
006	J-180.05	106	J-400.01	206	J-410.02	306		406	H-1	506	H-3	606	H-3	706	H-4	806	H-5	906	H-6
007	J-180.05	107	J-400.01	207	J-410.02	307		407	H-1	507	H-3	607	H-3	707		807	H-5	907	H-6
008	J-180.05	108	J-400.01	208	J-410.02	308		408	H-1	508	H-3	608	H-3	708		808	H-5	908	H-6
009	J-180.05	109	J-400.01	209	J-410.02	309		409	H-1	509	H-3	609	H-3	709		809	H-5	909	H-6
010	J-180.05	110	J-400.01	210	J-410.02	310		410	H-1	510	H-3	610	H-3	710	H-5	810	H-5	910	H-6
011	J-180.05	111	J-400.01	211	J-410.02	311		411	H-1	511	H-3	611	H-3	711	H-5	811	H-5	911	H-6
012	J-180.05	112	J-400.01	212	J-410.02	312		412	H-1	512	H-3	612	H-3	712	H-5	812	H-5	912	H-6
013	J-180.05	113	J-400.01	213	J-410.02	313		413	H-1	513	H-3	613	H-3	713	H-5	813	H-5	913	H-6
014	J-180.05	114	J-400.01	214	J-410.02	314		414	H-1	514	H-3	614	H-3	714	H-5	814	H-5	914	H-6
015	J-180.05	115	J-400.01	215	J-410.02	315		415	H-1	515	H-3	615	H-3	715	H-5	815	H-5	915	H-6
016	J-180.05	116	J-400.01	216	J-410.02	316		416		516	H-3	616	H-3	716	H-5	816	H-5	916	H-6
017	J-180.05	117	J-400.01	217	J-410.02	317		417		517	H-3	617	H-3	717	H-5	817	H-5	917	H-6
018	J-180.05	118	J-400.01	218	J-410.02	318		418		518	H-3	618	H-3	718	H-5	818	H-5	918	H-6
019	J-180.05	119	J-400.01	219	J-410.02	319		419		519	H-3	619	H-3	719	H-5	819	H-5	919	H-6
020	J-180.05	120	J-400.01	220	J-410.02	320		420	H-1	520	H-3	620	H-3	720	H-5	820	H-5	920	H-6
021	J-180.05	121	J-400.01	221	J-410.02	321		421	H-1	521	H-3	621	H-3	721	H-5	821	H-5	921	H-6
022	J-180.05	122	J-400.01	222	J-410.02	322		422	H-1	522	H-3	622	H-3	722	H-5	822	H-5	922	H-6
023	J-180.05	123	J-400.01	223	J-410.02	323		423	H-1	523	H-3	623	H-3	723	H-5	823	H-5	923	H-6
024	J-180.05	124	J-400.01	224	J-410.02	324		424	H-1	524	H-3	624	H-3	724	H-5	824	H-5	924	H-6
025	J-180.05	125	J-400.01	225	J-410.02	325		425	H-1	525	H-3	625	H-3	725	H-5	825	H-5	925	H-6
026	J-180.05	126	J-400.01	226	J-410.02	326		426	H-1	526	H-3	626	H-3	726	H-5	826	H-5	926	H-6
027	J-180.05	127	J-400.01	227	J-410.02	327		427	H-1	527	H-3	627	H-3	727	H-5	827	H-5	927	H-6
028	J-180.05	128	J-400.01	228	J-410.02	328		428	H-1	528	H-3	628	H-3	728	H-5	828	H-5	928	H-6
029	J-180.05	129	J-400.01	229	J-410.02	329		429	H-1	529	H-3	629	H-3	729	H-5	829	H-5	929	H-6
030	J-180.05	130	J-400.01	230	J-410.02	330		430	H-1	530	H-3	630	H-3	730	H-5	830	H-5	930	H-6
031	J-180.05	131	J-400.01	231	J-410.02	331		431	H-1	531	H-3	631	H-3	731	H-5	831	H-5	931	H-6
032	J-180.05	132	J-400.01	232	J-410.02	332		432	H-1	532	H-3	632	H-3	732	H-5	832	H-5	932	H-6
033	J-180.05	133	J-400.01	233	J-410.02	333		433	H-1	533	H-3	633	H-3	733	H-5	833	H-5	933	H-6
034	J-180.05	134	J-400.01	234	J-410.02	334		434	H-1	534	H-3	634	H-3	734	H-5	834	H-5	934	H-6
035	J-180.05	135		235	J-410.02	335		435	H-1	535	H-3	635	H-3	735	H-5	835	H-5	935	H-6
036	J-180.05	136		236	J-410.02	336		436		536	H-3	636	H-3	736	H-5	836	H-5	936	H-6
037	J-180.05	137		237	J-410.02	337		437		537	H-3	637	H-3	737	H-5	837	H-5	937	H-6
038	J-180.05	138		238	J-410.02	338		438		538	H-3	638	H-3	738	H-5	838	H-5	938	H-6
039	J-180.05	139		239	J-410.02	339		439		539	H-3	639	H-3	739	H-5	839	H-5	939	H-6
040	J-180.05	140	J-300.02	240	J-410.02	340		440	H-2	540	H-3	640	H-3	740	H-5	840	H-5	940	H-6
041	J-180.05	141	J-300.02	241	J-410.02	341		441	H-2	541	H-3	641	H-3	741	H-5	841	H-5	941	H-6
042	J-180.05	142	J-300.02	242	J-410.02	342		442	H-2	542	H-3	642	H-3	742	H-5	842	H-5	942	H-6
043	J-180.05	143	J-300.02	243	J-410.02	343		443	H-2	543	H-3	643	H-3	743	H-5	843	H-5	943	H-6
044	J-180.05	144	J-300.02	244	J-410.02	344		444	H-2	544	H-3	644	H-3	744	H-5	844	H-5	944	H-6
045	J-180.05	145	J-300.02	245	J-410.02	345		445	H-2	545	H-3	645	H-3	745	H-5	845	H-5	945	H-6
046	J-180.05	146	J-300.02	246	J-410.02	346		446	H-2	546	H-3	646	H-3	746	H-5	846	H-5	946	H-6
047	J-180.06	147	J-300.02	247	J-410.02	347		447	H-2	547	H-3	647	H-3	747	H-5	847	H-5	947	H-6
048	J-180.06	148	J-300.02	248	J-410.02	348		448	H-2	548	H-3	648	H-3	748	H-5	848	H-5	948	H-6
049	J-180.06	149	J-300.02	249	J-410.02	349		449	H-2	549	H-3	649	H-3	749	H-5	849	H-5	949	H-6
050	J-180.05	150	J-300.02	250	J-410.02	350		450	H-2	550	H-3	650	H-3	750	H-5	850	H-5	950	H-6
051	J-180.05	151	J-300.02	251	J-410.02	351		451	H-2	551	H-3	651	H-3	751	H-5	851	H-5	951	H-6
052	J-180.05	152	J-300.02	252	J-410.02	352		452	H-2	552	H-3	652	H-3	752	H-5	852	H-5	952	H-6
053	J-180.05	153	J-300.02	253	J-410.02	353		453	H-2	553	H-3	653	H-3	753	H-5	853	H-5	953	H-6
054	J-180.06	154	J-300.02	254	J-410.02	354		454		554	H-3	654	H-3	754	H-5	854	H-5	954	H-6
055	J-180.06	155	J-300.02	255	J-410.02	355		455		555	H-3	655	H-5	755	H-5	855	H-5	955	H-6
056	J-180.06	156	J-300.02	256	J-410.02	356		456		556	H-3	656	H-3	756	H-5	856	H-5	956	H-6
057	J-180.06	157	J-300.02	257	J-410.02	357		457		557	H-3	657	H-3	757	H-5	857	H-5	957	H-6
058	J-180.06	158	J-300.02	258	J-410.02	358		458		558	H-3	658	H-3	758	H-5	858	H-5	958	H-6
059	J-180.06	159	J-300.02	259	J-410.02	359		459		559	H-3	659	H-3	759	H-5	859	H-5	959	H-6
060	J-180.06	160	J-300.02	260	J-410.02	360		460	H-2	560	H-3	660	H-3	760	H-5	860	H-5	960	H-6
061	J-180.06	161	J-300.02	261	J-410.02	361		461	H-2	561	H-3	661	H-3	761	H-5	861	H-5	961	H-6
062	J-180.06	162	J-300.02	262	J-410.02	362		462	H-2	562	H-3	662	H-3	762	H-5	862	H-5	962	H-6
063	J-180.06	163	J-300.02	263	J-410.02	363		463	H-2	563	H-3	663	H-3	763	H-5	863	H-5	963	H-6
064	J-180.06	164	J-300.02	264	J-410.02	364		464	H-2	564	H-3	664	H-3	764	H-5	864	H-5	964	H-6
065	J-180.06	165	J-300.02	265		365		465	H-2	565	H-3	665	H-3	765	H-5	865	H-5	965	H-6
066	J-180.06	166	J-300.02	266		366		466	H-2	566	H-3	666	H-3	766	H-5	866	H-5	966	H-6
067	J-180.06	167		267		367		467	H-2	567	H-3	667	H-3	767	H-5	867	H-5	967	H-6
068	J-180.06	168		268		368		468	H-2	568	H-3	668	H-3	768	H-5	868	H-5	968	H-6
069	J-180.06	169		269		369		469	H-2	569	H-3	669	H-3	769	H-5	879	H-5	969	H-6
070	J-180.06	170	J-300.02	270		370		470	H-2	570	H-3	670	H-3	770	H-5	870	H-5	970	H-6
071	J-180.06	171	J-300.02	271	J-120.02	371		471	H-2	571	H-3	671	H-3	771	H-5	871	H-5	971	H-6
072	J-180.06	172	J-300.02	272	J-120.02	372		472	H-2	572	H-3	672	H-3	772	H-5	872	H-5	972	H-6
073	J-180.06	173	J-300.02	273	J-120.02	373		473	H-2	573	H-3	673	H-3	773	H-5	873	H-5	973	H-6
074	J-180.06	174	J-300.02	274	J-120.02	374		474		574	H-3	674	H-3	774	H-5	874	H-5	974	H-6
075	J-180.06	175	J-300.02	275	J-120.02	375		475		575		675		775	H-5	875	H-5	975	H-6
076	J-180.06	176	J-300.02	276	J-120.02	376		476		576		676		776	H-5	876	H-5	976	H-6
077	J-180.06	177	J-300.02	277	J-120.02	377		477		577		677		777	H-5	877	H-5	977	H-6
078	J-180.06	178	J-300.02	278	J-120.02	378		478		578		678		778	H-5	878	H-5	978	H-6
079	J-180.06	179	J-300.02	279	J-120.02	379		479		579		679		779	H-5	879	H-5	979	H-6
080	J-180.06	180	J-300.02	280	J-120.02	380		480	H-3	580	H-3	680	H-4	780	H-5	880	H-5	980	H-6
081	J-180.06	181	J-300.02	281	J-120.02	381		481	H-3	581	H-3	681	H-4	781	H-5	881	H-5	981	H-6
082	J-180.07	182	J-300.02	282	J-120.02	382		482	H-3	582	H-3	682	H-4	782	H-5	882	H-5	982	H-6
083	J-180.07	183	J-300.02	283	J-120.02	383		483	H-3	583	H-3	683	H-4	783	H-5	883	H-5	983	H-6
084	J-180.07	184	J-300.02	284	J-120.02	384		484	H-3	584	H-3	684	H-4	784	H-5	884	H-5	984	H-6
085	J-180.06	185	J-300.02	285	J-120.02	385		485	H-3	585	H-3	685	H-4	785	H-5	885	H-5	985	H-6
086	J-180.06	186	J-300.02	286		386		486	H-3	586	H-3	686	H-4	786	H-5	886	H-5	986	H-6
087	J-180.06	187	J-300.02	287		387		487	H-3	587	H-3	687	H-4	787	H-5	887	H-5	987	H-6
088	J-180.06	188	J-300.02	288		388		488	H-3	588	H-3	688	H-4	788	H-5	888	H-5	988	H-6
089	J-180.07	189	J-300.02	289		389		489	H-3	589	H-3	689	H-4	789	H-5	889	H-5	989	H-6
090	J-180.07	190	J-300.02	290		390		490	H-3	590	H-3	690	H-4	790	H-5	890	H-5	990	H-6
091	J-180.07	191	J-300.02	291		391		491	H-3	591	H-3	691	H-4	791	H-5	891	H-5	991	H-6
092	J-180.07	192	J-300.02	292		392		492	H-3	592	H-3	692		792	H-5	892	H-5	992	H-6
093	J-180.07	193	J-300.02	293		393		493	H-3	593	H-3	693		793	H-5	893	H-5	993	H-6
094	J-180.07	194	J-300.02	294		394		494	H-3	594	H-3	694		794	H-5	894	H-5	994	H-6
095	J-180.07	195	J-300.02	295		395		495	H-3	595	H-3	695	H-4	795	H-5	895		995	
096	J-180.07	196	J-300.02	296		396		496	H-3	596	H-3	696	H-4	796	H-5	896		996	
097	J-180.07	197		297		397		497	H-3	597	H-3	697	H-4	797	H-5	897		997	
098	J-180.07	198		298		398		498	H-3	598	H-3	698	H-4	798	H-5	898		998	
099	J-180.07	199		299		399		499	H-3	599	H-3	699	H-4	799	H-5	899		999	

FORD MOTOR COMPANY
STANDARD PARTS

INDEX

THE TWO NUMBERS AT THE TOP OF THE NO. COLUMN ARE THE FIRST DIGITS OF THE FIVE DIGIT NUMBER AND FOLLOWING NUMBERS IN THE COLUMN ARE THE LAST THREE DIGITS OF THE FIVE DIGIT NUMBER.

No.	Page	No.	Page	No.	Page	No.	Page	No.	Page	No.	Page	No.	Page	No.	Page	No.	Page	No.	Page
75		75		75		75		75		75		75		75		75		75	
000	H-6	100	H-7	200	H-8	300	H-8	400	H-9	500	H-9	600		700		800	H-10	900	
001	H-6	101	H-7	201	H-8	301	H-8	401	H-9	501	H-9	601		701		801	H-10	901	
002	H-6	102	H-7	202	H-8	302	H-8	402	H-9	502	H-9	602		702		802	H-10	902	
003	H-6	103	H-7	203	H-8	303	H-8	403	H-9	503	H-9	603		703		803	H-10	903	
004	H-6	104	H-7	204	H-8	304	H-8	404	H-9	504	H-9	604		704		804	H-10	904	
005	H-6	105	H-7	205	H-8	305	H-8	405	H-9	505	H-9	605		705		805	H-10	905	
006	H-6	106	H-7	206	H-8	306	H-8	406	H-9	506	H-9	606		706		806	H-10	906	
007	H-6	107	H-7	207	H-8	307	H-8	407	H-9	507	H-9	607		707		807	H-10	907	
008	H-6	108	H-7	208	H-8	308	H-8	408	H-9	508	H-9	608		708		808	H-10	908	
009	H-6	109	H-7	209	H-8	309	H-8	409	H-9	509	H-9	609		709		809	H-10	909	
010	H-6	110	H-7	210	H-8	310	H-8	410	H-9	510	H-9	610		710		810	H-10	910	
011	H-6	111	H-7	211	H-8	311	H-8	411	H-9	511	H-9	611		711		811	H-10	911	
012	H-6	112		212	H-8	312	H-8	412	H-9	512	H-9	612		712		812	H-10	912	
013	H-6	113	H-7	213	H-8	313	H-8	413	H-9	513	H-9	613		713		813	H-10	913	
014	H-6	114	H-7	214	H-8	314	H-8	414	H-9	514	H-9	614		714		814	H-10	914	
015	H-6	115	H-7	215	H-8	315	H-8	415	H-9	515	H-9	615		715		815	H-10	915	
016	H-6	116	H-7	216	H-8	316	H-8	416	H-9	516	H-9	616		716		816		916	
017	H-6	117	H-7	217	H-8	317	H-8	417	H-9	517	H-9	617		717		817		917	
018	H-6	118	H-7	218	H-8	318	H-8	418	H-9	518	H-9	618		718		818		918	
019	H-6	119	H-7	219	H-8	319	H-8	419	H-9	519	H-9	619		719		819		919	
020	H-6	120	H-7	220		320		420	H-9	520	H-9	620		720		820	H-10	920	
021	H-6	121	H-7	221		321		421		521		621		721		821	H-10	921	
022	H-6	122	H-7	222		322		422		522		622		722		822	H-10	922	
023	H-6	123	H-7	223		323		423		523		623		723		823	H-10	923	
024	H-6	124	H-7	224		324		424		524		624		724		824	H-10	924	
025	H-6	125		225	H-8	325	H-9	425	H-9	525		625		725		825	H-10	925	
026	H-6	126	H-8	226	H-8	326	H-9	426	H-9	526		626		726		826	H-10	926	
027	H-6	127	H-8	227	H-8	327	H-9	427	H-9	527		627		727		827	H-10	927	
028	H-6	128	H-8	228	H-8	328	H-9	428	H-9	528		628		728		828	H-10	928	
029	H-6	129	H-8	229	H-8	329	H-9	429	H-9	529		629		729		829		929	
030	H-6	130	H-8	230	H-8	330	H-9	430	H-9	530		630		730		830		930	
031	H-6	131	H-8	231	H-8	331	H-9	431	H-9	531		631		731		831		931	
032	H-6	132	H-8	232	H-8	332	H-9	432	H-9	532		632		732		832		932	
033	H-6	133	H-8	233	H-8	333	H-9	433	H-9	533		633		733		833		933	
034	H-6	134	H-8	234	H-8	334	H-9	434	H-9	534		634		734		834		934	
035	H-6	135	H-8	235	H-8	335	H-9	435	H-9	535		635		735		835	H-11	935	
036	H-6	136	H-8	236	H-8	336	H-9	436	H-9	536		636		736		836	H-11	936	
037	H-6	137	H-8	237	H-8	337	H-9	437	H-9	537		637		737		837	H-11	937	
038	H-6	138	H-8	238	H-8	338	H-9	438	H-9	538		638		738		838	H-11	938	
039	H-6	139	H-8	239	H-8	339	H-9	439	H-9	539		639		739		839	H-11	939	
040	H-6	140	H-8	240	H-8	340	H-9	440	H-9	540		640		740		840	H-11	940	
041	H-6	141	H-8	241	H-8	341	H-9	441	H-9	541		641		741		841	H-11	941	
042	H-6	142	H-8	242	H-8	342	H-9	442	H-9	542		642		742		842	H-11	942	
043	H-6	143	H-8	243	H-8	343	H-9	443	H-9	543		643		743		843	H-11	943	
044	H-6	144	H-8	244	H-8	344	H-9	444	H-9	544		644		744		844	H-11	944	
045	H-6	145	H-8	245	H-8	345	H-9	445	H-9	545		645		745		845		945	
046	H-6	146	H-8	246	H-8	346	H-9	446	H-9	546		646		746		846		946	
047	H-6	147	H-8	247	H-8	347	H-9	447	H-9	547		647		747		847		947	
048	H-6	148	H-8	248	H-8	348	H-9	448	H-9	548		648		748		848		948	
049	H-6	149	H-8	249	H-8	349	H-9	449	H-9	549		649		749		849		949	
050	H-6	150	H-8	250	H-8	350	H-9	450	H-9	550		650		750		850	H-11	950	
051	H-6	151	H-8	251	H-8	351	H-9	451	H-9	551		651		751		851	H-11	951	
052	H-6	152	H-8	252	H-8	352	H-9	452	H-9	552		652		752		852	H-11	952	
053	H-6	153	H-8	253	H-8	353	H-9	453	H-9	553		653		753		853	H-11	953	
054	H-6	154	H-8	254	H-8	354	H-9	454	H-9	554		654		754		854	H-11	954	
055	H-6	155	H-8	255	H-8	355	H-9	455	H-9	555		655		755		855	H-11	955	
056	H-6	156	H-8	256	H-8	356	H-9	456	H-9	556		656		756		856	H-11	956	
057	H-6	157	H-8	257	H-8	357	H-9	457	H-9	557		657		757		857	H-11	957	
058	H-6	158	H-8	258	H-8	358	H-9	458	H-9	558		658		758		858	H-11	958	
059	H-6	159	H-8	259	H-8	359	H-9	459	H-9	559		659		759		859	H-11	959	
060	H-6	160	H-8	260	H-8	360	H-9	460	H-9	560		660		760		860	H-11	960	
061	H-6	161	H-8	261	H-8	361	H-9	461	H-9	561		661		761		861		961	
062	H-6	162	H-8	262	H-8	362	H-9	462	H-9	562		662		762		862		962	
063	H-6	163	H-8	263	H-8	363	H-9	463	H-9	563		663		763		863		963	
064	H-6	164	H-8	264	H-8	364	H-9	464	H-9	564		664		764		864		964	
065	H-6	165	H-8	265	H-8	365	H-9	465	H-9	565		665		765		865		965	
066	H-6	166	H-8	266	H-8	366	H-9	466	H-9	566		666		766		866		966	
067	H-6	167	H-8	267	H-8	367	H-9	467	H-9	567		667		767		867		967	
068	H-6	168	H-8	268	H-8	368	H-9	468	H-9	568		668		768		868		968	
069	H-6	169	H-8	269	H-8	369	H-9	469	H-9	569		669		769		869		969	
070	H-6	170	H-8	270	H-8	370	H-9	470	H-9	570		670		770		870		970	
071	H-6	171	H-8	271	H-8	371	H-9	471	H-9	571		671		771		871		971	
072	H-6	172	H-8	272	H-8	372	H-9	472	H-9	572		672		772		872		972	
073	H-6	173	H-8	273	H-8	373	H-9	473	H-9	573		673		773		873		973	
074	H-6	174	H-8	274	H-8	374	H-9	474	H-9	574		674		774		874		974	
075	H-6	175	H-8	275	H-8	375	H-9	475	H-9	575		675		775		875		975	
076	H-6	176	H-8	276	H-8	376	H-9	476	H-9	576		676		776		876		976	
077	H-6	177	H-8	277	H-8	377	H-9	477	H-9	577		677		777		877		977	
078	H-6	178	H-8	278	H-8	378	H-9	478	H-9	578		678		778		878		978	
079	H-6	179	H-8	279	H-8	379	H-9	479	H-9	579		679		779		879		979	
080	H-6	180	H-8	280	H-8	380	H-9	480	H-9	580		680		780		880		980	
081	H-6	181	H-8	281	H-8	381	H-9	481	H-9	581		681		781		881		981	
082	H-6	182	H-8	282	H-8	382	H-9	482	H-9	582		682		782		882		982	
083	H-6	183	H-8	283	H-8	383	H-9	483	H-9	583		683		783		883		983	
084	H-6	184	H-8	284	H-8	384	H-9	484	H-9	584		684		784		884		984	
085	H-6	185	H-8	285	H-8	385	H-9	485	H-9	585		685		785		885		985	
086	H-6	186	H-8	286	H-8	386	H-9	486	H-9	586		686		786		886		986	
087	H-6	187	H-8	287	H-8	387	H-9	487	H-9	587		687		787		887		987	
088	H-6	188	H-8	288	H-8	388	H-9	488	H-9	588		688		788		888		988	
089	H-6	189	H-8	289	H-8	389	H-9	489	H-9	589		689		789		889		989	
090	H-6	190	H-8	290	H-8	390	H-9	490	H-9	590		690		790		890		990	
091	H-6	191	H-8	291	H-8	391	H-9	491	H-9	591		691		791		891		991	
092	H-6	192	H-8	292	H-8	392	H-9	492	H-9	592		692		792		892		992	
093	H-6	193	H-8	293	H-8	393	H-9	493	H-9	593		693		793		893		993	
094	H-6	194	H-8	294	H-8	394	H-9	494	H-9	594		694		794		894		994	
095		195	H-8	295	H-8	395	H-9	495	H-9	595		695		795		895		995	
096		196	H-8	296	H-8	396	H-9	496	H-9	596		696		796		896		996	
097		197	H-8	297	H-8	397	H-9	497	H-9	597		697		797		897		997	
098		198	H-8	298	H-8	398	H-9	498	H-9	598		698		798		898		998	
099		199	H-8	299	H-8	399	H-9	499	H-9	599		699		799		899		999	

FORD MOTOR COMPANY
STANDARD PARTS

INDEX

THE TWO NUMBERS AT THE TOP OF THE NO. COLUMN ARE THE FIRST DIGITS OF THE FIVE DIGIT NUMBER AND FOLLOWING NUMBERS IN THE COLUMN ARE THE LAST THREE DIGITS OF THE FIVE DIGIT NUMBER.

No.	Page	No.	Page	No.	Page	No.	Page	No.	Page	No.	Page	No.	Page	No.	Page	No.	Page	No.	Page
76		76		76		76		76		76		76		76		76		76	
000	J-180.02	100	J-180.06	200	J-180.03	300	J-180.04	400	J-180.05	500	J-180.06	600	J-180.07	700		800		900	
001	J-180.02	101	J-180.06	201	J-180.03	301	J-180.04	401	J-180.05	501	J-180.06	601	J-180.07	701		801		901	
002	J-180.02	102	J-180.06	202	J-180.03	302	J-180.04	402	J-180.05	502	J-180.06	602	J-180.07	702		802		902	
003	J-180.02	103	J-180.06	203	J-180.03	303	J-180.04	403	J-180.05	503	J-180.06	603	J-180.07	703		803		903	
004	J-180.02	104	J-180.06	204	J-180.03	304	J-180.04	404	J-180.05	504	J-180.06	604	J-180.07	704		804		904	
005	J-180.02	105	J-180.07	205	J-180.03	305	J-180.04	405	J-180.05	505	J-180.06	605	J-180.07	705		805		905	
006	J-180.02	106	J-180.07	206	J-180.03	306	J-180.04	406	J-180.05	506	J-180.06	606	J-180.07	706		806		906	
007	J-180.03	107	J-180.02	207	J-180.03	307	J-180.04	407	J-180.05	507	J-180.06	607	J-180.07	707		807		907	
008		108	J-180.02	208	J-180.03	308	J-180.04	408	J-180.05	508	J-180.06	608	J-180.07	708		808		908	
009	J-180.03	109	J-180.02	209	J-180.03	309	J-180.04	409	J-180.05	509	J-180.06	609	J-180.07	709		809		909	
010	J-180.03	110	J-180.02	210	J-180.03	310	J-180.04	410	J-180.05	510	J-180.06	610	J-180.07	710		810		910	
011	J-180.03	111	J-180.02	211	J-180.03	311	J-180.04	411	J-180.05	511	J-180.06	611	J-180.07	711		811		911	
012	J-180.03	112	J-180.02	212	J-180.03	312	J-180.04	412	J-180.05	512	J-180.06	612	J-180.07	712		812		912	
013	J-180.03	113	J-180.02	213	J-180.03	313	J-180.04	413	J-180.05	513	J-180.06	613	J-180.07	713		813		913	
014	J-180.04	114	J-180.02	214	J-180.03	314	J-180.04	414	J-180.05	514	J-180.06	614	J-180.07	714		814		914	
015	J-180.04	115	J-180.02	215	J-180.03	315	J-180.04	415	J-180.05	515	J-180.06	615	J-180.07	715		815		915	
016	J-180.04	116	J-180.02	216	J-180.03	316	J-180.04	416	J-180.05	516	J-180.06	616	J-180.07	716		816		916	
017	J-180.04	117	J-180.02	217	J-180.03	317	J-180.04	417	J-180.05	517	J-180.06	617	J-180.07	717		817		917	
018	J-180.02	118	J-180.02	218	J-180.03	318	J-180.04	418	J-180.05	518	J-180.06	618	J-180.07	718		818		918	
019	J-180.02	119	J-180.02	219	J-180.03	319	J-180.04	419	J-180.05	519	J-180.06	619	J-180.07	719		819		919	
020	J-180.02	120	J-180.02	220	J-180.03	320	J-180.04	420	J-180.05	520	J-180.06	620	J-180.07	720		820		920	
021	J-180.02	121	J-180.02	221	J-180.03	321	J-180.04	421	J-180.05	521	J-180.06	621	J-180.07	721		821		921	
022	J-180.02	122	J-180.02	222	J-180.03	322	J-180.04	422	J-180.05	522	J-180.06	622	J-180.07	722		822		922	
023	J-180.02	123	J-180.02	223	J-180.03	323	J-180.04	423	J-180.05	523	J-180.06	623	J-180.07	723		823		923	
024	J-180.02	124	J-180.02	224	J-180.03	324	J-180.04	424	J-180.05	524	J-180.06	624	J-180.07	724		824		924	
025	J-180.03	125	J-180.02	225	J-180.03	325	J-180.04	425	J-180.05	525	J-180.06	625	J-180.07	725		825		925	
026	J-180.03	126	J-180.02	226	J-180.03	326	J-180.04	426	J-180.05	526	J-180.06	626	J-180.07	726		826		926	
027		127	J-180.02	227	J-180.03	327	J-180.04	427	J-180.05	527	J-180.06	627	J-180.07	727		827		927	
028	J-180.03	128	J-180.02	228	J-180.03	328	J-180.04	428	J-180.05	528	J-180.06	628	J-180.07	728		828		928	
029	J-180.03	129	J-180.02	229	J-180.03	329	J-180.04	429	J-180.05	529	J-180.06	629	J-180.07	729		829		929	
030	J-180.03	130	J-180.02	230	J-180.03	330	J-180.04	430	J-180.05	530	J-180.06	630	J-180.07	730		830		930	
031	J-180.04	131	J-180.02	231	J-180.03	331	J-180.04	431	J-180.06	531	J-180.06	631	J-180.07	731		831		931	
032	J-180.04	132	J-180.02	232	J-180.03	332	J-180.04	432	J-180.06	532	J-180.06	632	J-180.07	732		832		932	
033	J-180.04	133	J-180.02	233	J-180.03	333	J-180.04	433	J-180.06	533	J-180.06	633	J-180.07	733		833		933	
034	J-180.04	134	J-180.02	234	J-180.03	334	J-180.04	434	J-180.06	534	J-180.06	634	J-180.07	734		834		934	
035	J-180.02	135	J-180.02	235	J-180.03	335	J-180.05	435	J-180.06	535	J-180.06	635	J-180.07	735		835		935	
036	J-180.02	136	J-180.02	236	J-180.03	336	J-180.05	436	J-180.06	536	J-180.06	636	J-180.07	736		836		936	
037	J-180.02	137	J-180.02	237	J-180.03	337	J-180.05	437	J-180.06	537	J-180.06	637	J-180.07	737		837		937	
038	J-180.02	138	J-180.02	238	J-180.03	338	J-180.05	438	J-180.06	538	J-180.06	638	J-180.07	738		838		938	
039	J-180.02	139	J-180.02	239	J-180.03	339	J-180.05	439	J-180.06	539	J-180.06	639	J-180.07	739		839		939	
040	J-180.02	140	J-180.02	240	J-180.03	340	J-180.05	440	J-180.06	540	J-180.06	640	J-180.07	740		840		940	
041	J-180.03	141	J-180.02	241	J-180.03	341	J-180.05	441	J-180.06	541	J-180.06	641	J-180.07	741		841		941	
042	J-180.03	142	J-180.02	242	J-180.03	342	J-180.05	442	J-180.06	542	J-180.06	642	J-180.07	742		842		942	
043	J-180.03	143	J-180.02	243	J-180.03	343	J-180.05	443	J-180.06	543	J-180.06	643	J-180.07	743		843		943	
044	J-180.03	144	J-180.02	244	J-180.03	344	J-180.05	444	J-180.06	544	J-180.06	644	J-180.07	744		844		944	
045	J-180.03	145	J-180.02	245	J-180.03	345	J-180.05	445	J-180.06	545	J-180.06	645	J-180.07	745		845		945	
046	J-180.03	146	J-180.02	246	J-180.03	346	J-180.05	446	J-180.06	546	J-180.06	646	J-180.07	746		846		946	
047	J-180.04	147	J-180.02	247	J-180.03	347	J-180.05	447	J-180.06	547	J-180.06	647	J-180.07	747		847		947	
048	J-180.04	148	J-180.02	248	J-180.03	348	J-180.05	448	J-180.06	548	J-180.06	648	J-180.07	748		848		948	
049	J-180.04	149	J-180.02	249	J-180.04	349	J-180.05	449	J-180.06	549	J-180.06	649	J-180.07	749		849		949	
050		150	J-180.02	250	J-180.04	350	J-180.05	450	J-180.06	550	J-180.06	650	J-180.07	750		850		950	
051	J-180.04	151	J-180.02	251	J-180.04	351	J-180.05	451	J-180.06	551	J-180.06	651		751		851		951	
052	J-180.04	152	J-180.02	252	J-180.04	352	J-180.05	452	J-180.06	552	J-180.06	652		752		852		952	
053	J-180.04	153	J-180.02	253	J-180.04	353	J-180.05	453	J-180.06	553	J-180.06	653		753		853		953	
054	J-180.05	154	J-180.02	254	J-180.04	354	J-180.05	454	J-180.06	554	J-180.06	654		754		854		954	
055	J-180.05	155	J-180.02	255	J-180.04	355	J-180.05	455	J-180.06	555	J-180.06	655		755		855		955	
056	J-180.05	156	J-180.02	256	J-180.04	356	J-180.05	456	J-180.06	556	J-180.06	656		756		856		956	
057	J-180.05	157	J-180.02	257	J-180.04	357	J-180.05	457	J-180.06	557	J-180.07	657		757		857		957	
058	J-180.05	158	J-180.02	258	J-180.04	358	J-180.05	458	J-180.06	558	J-180.07	658		758		858		958	
059	J-180.05	159	J-180.02	259	J-180.04	359	J-180.05	459	J-180.06	559	J-180.07	659		759		859		959	
060	J-180.05	160	J-180.02	260	J-180.04	360	J-180.05	460	J-180.06	560	J-180.07	660		760		860		960	
061	J-180.05	161	J-180.02	261	J-180.04	361	J-180.05	461	J-180.06	561	J-180.07	661		761		861		961	
062	J-180.06	162	J-180.02	262	J-180.04	362	J-180.05	462	J-180.06	562	J-180.07	662		762		862		962	
063	J-180.06	163	J-180.02	263	J-180.04	363	J-180.05	463	J-180.06	563	J-180.07	663		763		863		963	
064	J-180.06	164	J-180.02	264	J-180.04	364	J-180.05	464	J-180.06	564	J-180.07	664		764		864		964	
065	J-180.06	165	J-180.02	265	J-180.04	365	J-180.05	465	J-180.06	565	J-180.07	665		765		865		965	
066	J-180.06	166	J-180.02	266	J-180.04	366	J-180.05	466	J-180.06	566	J-180.07	666		766		866		966	
067	J-180.07	167	J-180.02	267	J-180.04	367	J-180.05	467	J-180.06	567	J-180.07	667		767		867		967	
068	J-180.07	168	J-180.02	268	J-180.04	368	J-180.05	468	J-180.06	568	J-180.07	668		768		868		968	
069	J-180.04	169	J-180.02	269	J-180.04	369	J-180.05	469	J-180.06	569	J-180.07	669		769		879		969	
070	J-180.04	170	J-180.02	270	J-180.04	370	J-180.05	470	J-180.06	570	J-180.07	670		770		870		970	
071	J-180.04	171	J-180.02	271	J-180.04	371	J-180.05	471	J-180.06	571	J-180.07	671		771		871		971	
072	J-180.05	172	J-180.02	272	J-180.04	372	J-180.05	472	J-180.06	572	J-180.07	672		772		872		972	
073	J-180.05	173	J-180.02	273	J-180.04	373	J-180.05	473	J-180.06	573	J-180.07	673		773		873		973	
074	J-180.05	174	J-180.02	274	J-180.04	374	J-180.05	474	J-180.06	574	J-180.07	674		774		874		974	
075	J-180.05	175	J-180.03	275	J-180.04	375	J-180.05	475	J-180.06	575	J-180.07	675		775		875		975	
076	J-180.05	176	J-180.03	276	J-180.04	376	J-180.05	476	J-180.06	576	J-180.07	676		776		876		976	
077	J-180.05	177	J-180.03	277	J-180.04	377	J-180.05	477	J-180.06	577	J-180.07	677		777		877		977	
078	J-180.05	178	J-180.03	278	J-180.04	378	J-180.05	478	J-180.06	578	J-180.07	678		778		878		978	
079	J-180.05	179	J-180.03	279	J-180.04	379	J-180.05	479	J-180.06	579	J-180.07	679		779		879		979	
080	J-180.06	180	J-180.03	280	J-180.04	380	J-180.05	480	J-180.06	580	J-180.07	680		780		880		980	
081	J-180.06	181	J-180.03	281	J-180.04	381	J-180.05	481	J-180.06	581	J-180.07	681		781		881		981	
082	J-180.06	182	J-180.03	282	J-180.04	382	J-180.05	482	J-180.06	582	J-180.07	682		782		882		982	
083	J-180.06	183	J-180.03	283	J-180.04	383	J-180.05	483	J-180.06	583	J-180.07	683		783		883		983	
084	J-180.06	184	J-180.03	284	J-180.04	384	J-180.05	484	J-180.06	584	J-180.07	684		784		884		984	
085	J-180.07	185	J-180.03	285	J-180.04	385	J-180.05	485	J-180.06	585	J-180.07	685		785		885		985	
086	J-180.07	186	J-180.03	286	J-180.04	386	J-180.05	486	J-180.06	586	J-180.07	686		786		886		986	
087	J-180.07	187	J-180.03	287	J-180.04	387	J-180.05	487	J-180.06	587	J-180.07	687		787		887		987	
088	J-180.04	188	J-180.03	288	J-180.04	388	J-180.05	488	J-180.06	588	J-180.07	688		788		888		988	
089	J-180.04	189	J-180.03	289	J-180.04	389	J-180.05	489	J-180.06	589	J-180.07	689		789		889		989	
090	J-180.04	190	J-180.03	290	J-180.04	390	J-180.05	490	J-180.06	590	J-180.07	690		790		890		990	
091	J-180.04	191	J-180.03	291	J-180.04	391	J-180.05	491	J-180.06	591	J-180.07	691		791		891		991	
092	J-180.05	192	J-180.03	292	J-180.04	392	J-180.05	492	J-180.06	592	J-180.07	692		792		892		992	
093	J-180.05	193	J-180.03	293	J-180.04	393	J-180.05	493	J-180.06	593	J-180.07	693		793		893		993	
094	J-180.05	194	J-180.03	294	J-180.04	394	J-180.05	494	J-180.06	594	J-180.07	694		794		894		994	
095	J-180.05	195	J-180.03	295	J-180.04	395	J-180.05	495	J-180.06	595	J-180.07	695		795		895		995	
096	J-180.05	196	J-180.03	296	J-180.04	396	J-180.05	496	J-180.06	596	J-180.07	696		796		896		996	
097	J-180.05	197	J-180.03	297	J-180.04	397	J-180.05	497	J-180.06	597	J-180.07	697		797		897		997	
098	J-180.05	198	J-180.03	298	J-180.04	398	J-180.05	498	J-180.06	598	J-180.07	698		798		898		998	
099	J-180.05	199	J-180.03	299	J-180.04	399	J-180.05	499	J-180.06	599	J-180.07	699		799		899		999	

FORD MOTOR COMPANY
STANDARD PARTS

INDEX

THE TWO NUMBERS AT THE TOP OF THE NO. COLUMN ARE THE FIRST DIGITS OF THE FIVE DIGIT NUMBER AND FOLLOWING NUMBERS IN THE COLUMN ARE THE LAST THREE DIGITS OF THE FIVE DIGIT NUMBER.

No.	Page	No.	Page	No.	Page	No.	Page	No.	Page	No.	Page	No.	Page	No.	Page	No.	Page	No.	Page
87		87		87		87		87		87		87		87		87		87	
000	L-600.01	100	L-600.02	200	L-10	300	L-12	400	L-17	500	L-21	600	L-5	700	L-6	800	L-8	900	
001	L-600.01	101	L-600.02	201	L-10	301	L-12	401	L-17	501	L-21	601	L-5	701	L-6	801	L-8	901	L-100.01
002	L-600.01	102	L-600.02	202	L-10	302	L-12	402	L-17	502	L-21	602	L-5	702	L-6	802	L-8	902	L-100.01
003	L-600.01	103	L-600.02	203	L-10	303	L-12	403	L-17	503		603	L-5	703	L-6	803	L-8	903	L-100.01
004	L-600.01	104	L-600.02	204	L-10	304	L-12	404	L-17	504	L-22	604	L-5	704	L-6	804	L-8	904	L-100.01
005	L-600.01	105	L-600.02	205	L-10	305	L-12	405	L-17	505	L-22	605	L-5	705	L-6	805	L-8	905	L-100.01
006	L-600.01	106	L-600.02	206	L-10	306	L-12	406	L-17	506	L-22	606	L-5	706	L-6	806	L-8	906	L-100.01
007	L-600.01	107	L-600.02	207	L-10	307	L-12	407	L-17	507	L-22	607	L-5	707	L-6	807	L-8	907	L-100.01
008	L-600.01	108	L-600.02	208	L-10	308	L-12	408	L-17	508	L-22	608	L-5	708	L-6	808	L-8	908	L-100.01
009	L-600.01	109	L-600.02	209	L-10	309	L-14	409	L-17	509	L-22	609	L-5	709	L-6	809	L-8	909	L-100.01
010	L-600.01	110	L-600.02	210	L-10	310	L-14	410	L-17	510	L-22	610	L-5	710	L-6	810	L-8	910	
011	L-600.01	111	L-600.02	211	L-10	311	L-14	411	L-17	511	L-22	611	L-5	711	L-6	811	L-8	911	L-100.02
012	L-600.01	112	L-600.02	212	L-10	312	L-14	412	L-17	512		612	L-5	712	L-6	812	L-8	912	L-100.02
013	L-600.01	113	L-600.02	213	L-10	313	L-14	413	L-17	513	L-22	613	L-5	713	L-6	813	L-8	913	L-100.02
014	L-600.01	114	L-600.02	214	L-10	314	L-14	414	L-17	514	L-22	614	L-5	714	L-6	814	L-8	914	L-100.02
015	L-600.01	115	L-600.02	215	L-10	315	L-14	415	L-17	515	L-22	615	L-5	715	L-6	815	L-8	915	L-100.02
016	L-600.01	116	L-600.02	216	L-10	316	L-14	416	L-17	516	L-22	616	L-5	716	L-6	816	L-8	916	L-100.02
017	L-600.01	117	L-600.02	217	L-11	317	L-14	417	L-17	517	L-22	617	L-5	717	L-6	817	L-8	917	
018	L-600.01	118	L-600.02	218	L-11	318	L-14	418	L-17	518	L-22	618	L-5	718	L-6	818	L-8	918	
019	L-600.01	119	L-600.02	219	L-11	319	L-14	419	L-17	519	L-22	619	L-5	719	L-6	819	L-8	919	L-100.02
020	L-600.01	120	L-600.02	220	L-11	320	L-14	420	L-17	520	L-22	620	L-5	720	L-6	820	L-8	920	L-100.02
021	L-600.01	121	L-600.02	221	L-11	321	L-14	421	L-17	521		621	L-5	721	L-6	821	L-8	921	L-100.02
022	L-600.01	122	L-600.02	222	L-11	322	L-14	422	L-17	522	L-23	622	L-5	722	L-6	822	L-8	922	L-100.02
023	L-600.01	123	L-600.02	223	L-11	323	L-14	423	L-17	523	L-23	623	L-5	723	L-6	823	L-8	923	
024	L-600.01	124	L-600.02	224	L-11	324	L-14	424	L-17	524	L-23	624	L-5	724	L-6	824	L-8	924	L-100.02
025	L-600.01	125	L-600.02	225	L-11	325	L-14	425	L-17	525	L-23	625	L-5	725	L-6	825	L-8	925	
026	L-600.01	126	L-600.02	226	L-11	326	L-14	426	L-17	526	L-23	626	L-5	726	L-6	826	L-8	926	
027	L-600.01	127	L-600.01	227	L-11	327	L-14	427	L-17	527	L-23	627	L-5	727	L-6	827	L-8	927	
028	L-600.01	128	L-600.01	228	L-11	328	L-14	428	L-17	528	L-23	628	L-5	728	L-7	828	L-8	928	
029	L-600.01	129	L-600.01	229	L-11	329	L-14	429	L-17	529	L-23	629	L-5	729	L-7	829	L-8	929	
030	L-600.01	130	L-600.01	230	L-11	330	L-14	430	L-17	530		630	L-5	730	L-7	830	L-8	930	
031	L-600.01	131	L-600.01	231	L-11	331	L-14	431	L-18	531	L-23	631	L-5	731	L-7	831	L-8	931	L-100.03
032	L-600.01	132	L-600.01	232	L-11	332	L-14	432	L-18	532	L-23	632	L-5	732	L-7	832	L-8	932	
033	L-600.01	133	L-600.01	233	L-11	333	L-14	433	L-18	533	L-23	633	L-5	733	L-7	833	L-8	933	
034	L-600.01	134	L-600.01	234	L-11	334	L-14	434	L-18	534	L-23	634	L-5	734	L-7	834	L-8	934	
035	L-600.01	135	L-600.01	235	L-11	335	L-14	435	L-18	535	L-23	635	L-5	735	L-7	835	L-8	935	L-100.04
036	L-600.01	136	L-600.01	236	L-11	336	L-14	436	L-18	536	L-23	636	L-5	736	L-7	836	L-8	936	L-100.04
037	L-600.01	137	L-600.01	237	L-11	337	L-14	437	L-18	537	L-23	637	L-5	737	L-7	837	L-8	937	L-100.04
038	L-600.01	138	L-600.01	238	L-11	338	L-14	438	L-18	538	L-23	638	L-5	738	L-7	838	L-8	938	
039	L-600.01	139	L-600.01	239	L-11	339	L-14	439	L-18	539		639	L-5	739	L-7	839	L-8	939	
040	L-600.01	140	L-600.01	240	L-11	340	L-14	440	L-18	540		640	L-5	740	L-7	840	L-8	940	
041	L-600.01	141	L-600.01	241	L-11	341	L-14	441	L-18	541	L-23	641	L-5	741	L-7	841	L-8	941	L-9
042	L-600.01	142	L-600.01	242	L-11	342	L-14	442	L-18	542	L-23	642	L-5	742	L-7	842	L-8	942	L-9
043	L-600.01	143	L-600.01	243	L-11	343	L-14	443	L-18	543	L-23	643	L-5	743	L-7	843	L-8	943	L-9
044	L-600.01	144	L-600.01	244	L-11	344	L-14	444	L-18	544	L-23	644	L-5	744	L-7	844	L-8	944	L-9
045	L-600.01	145	L-600.01	245	L-11	345	L-14	445	L-18	545	L-23	645	L-5	745	L-7	845	L-8	945	L-9
046	L-600.01	146	L-600.01	246	L-11	346	L-14	446	L-18	546	L-23	646	L-5	746	L-7	846	L-8	946	L-9
047	L-600.01	147	L-600.01	247	L-11	347	L-14	447	L-18	547	L-23	647	L-5	747	L-7	847	L-8	947	L-9
048	L-600.01	148	L-600.01	248	L-11	348	L-14	448	L-18	548		648	L-5	748	L-7	848	L-8	948	L-9
049	L-600.02	149	L-600.01	249	L-11	349	L-14	449	L-19	549		649	L-5	749	L-7	849	L-8	949	L-9
050	L-600.02	150	L-600.01	250	L-11	350	L-14	450	L-19	550	L-23	650	L-5	750	L-7	850	L-8	950	L-9
051	L-600.02	151	L-600.01	251	L-11	351	L-14	451	L-19	551	L-23	651	L-5	751	L-7	851	L-8	951	L-9
052	L-600.02	152	L-600.01	252	L-11	352	L-14	452	L-19	552	L-23	652	L-5	752	L-7	852	L-8	952	L-9
053	L-600.02	153	L-600.01	253	L-11	353	L-14	453	L-19	553	L-23	653	L-5	753	L-7	853	L-8	953	L-9
054	L-600.02	154	L-600.01	254	L-11	354	L-14	454	L-19	554	L-23	654	L-5	754	L-7	854	L-8	954	L-9
055	L-600.02	155	L-600.01	255	L-11	355	L-14	455	L-19	555	L-23	655	L-5	755	L-7	855	L-8	955	L-9
056	L-600.02	156	L-600.01	256	L-11	356	L-14	456	L-19	556	L-23	656	L-5	756	L-7	856	L-13	956	L-9
057	L-600.02	157	L-600.01	257	L-11	357	L-15	457	L-19	557		657	L-5	757	L-7	857	L-13	957	L-100.03
058	L-600.02	158	L-600.01	258	L-11	358	L-15	458	L-19	558	L-24	658	L-5	758	L-7	858	L-13	958	L-100.03
059	L-600.02	159	L-600.01	259	L-11	359	L-15	459	L-19	559	L-24	659	L-5	759	L-7	859	L-13	959	L-100.03
060	L-600.02	160	L-600.01	260	L-11	360	L-15	460	L-19	560	L-24	660	L-5	760	L-7	860	L-13	960	
061	L-600.02	161	L-600.01	261	L-11	361	L-15	461	L-19	561	L-24	661	L-5	761	L-7	861	L-13	961	L-9
062	L-600.02	162		262	L-11	362	L-15	462	L-19	562	L-24	662	L-5	762	L-7	862	L-13	962	L-9
063	L-600.02	163		263	L-12	363	L-15	463	L-19	563	L-24	663	L-5	763	L-7	863	L-13	963	L-9
064	L-600.02	164		264	L-12	364	L-15	464	L-19	564	L-24	664	L-5	764	L-7	864	L-13	964	L-9
065	L-600.02	165		265	L-12	365	L-15	465	L-19	565	L-24	665	L-5	765	L-7	865	L-13	965	L-9
066	L-600.02	166		266	L-12	366	L-15	466	L-19	566		666	L-5	766	L-7	866	L-13	966	L-9
067	L-600.02	167		267	L-12	367	L-15	467	L-20	567	L-24	667	L-5	767	L-7	867	L-13	967	L-9
068	L-600.02	168		268	L-12	368	L-15	468	L-20	568	L-24	668	L-5	768	L-7	868	L-13	968	L-9
069	L-600.02	169		269	L-12	369	L-15	469	L-20	569	L-24	669	L-5	769	L-7	869	L-13	969	L-9
070	L-600.02	170		270	L-12	370	L-15	470	L-20	570	L-24	670	L-6	770	L-7	870	L-13	970	L-9
071	L-600.02	171		271	L-12	371	L-16	471	L-20	571	L-24	671	L-6	771	L-7	871	L-13	971	L-9
072	L-600.02	172		272	L-12	372	L-16	472	L-20	572	L-24	672	L-6	772	L-7	872	L-13	972	L-9
073	L-600.02	173		273	L-12	373	L-16	473	L-20	573	L-24	673	L-6	773	L-7	873	L-13	973	L-9
074	L-600.02	174		274	L-12	374	L-16	474	L-20	574	L-24	674	L-6	774	L-7	874	L-13	974	L-9
075	L-600.02	175		275	L-12	375	L-16	475	L-20	575		675	L-6	775	L-7	875	L-13	975	L-9
076	L-600.02	176		276	L-12	376	L-16	476	L-20	576		676	L-6	776	L-7	876	L-13	976	L-9
077	L-600.02	177		277	L-12	377	L-16	477	L-20	577		677	L-6	777	L-7	877	L-13	977	
078	L-600.02	178		278	L-12	378	L-16	478	L-20	578		678	L-6	778	L-7	878	L-13	978	
079	L-600.02	179		279	L-12	379	L-16	479	L-20	579		679	L-6	779	L-7	879	L-13	979	
080	L-600.02	180		280	L-12	380	L-16	480	L-20	580		680	L-6	780	L-7	880	L-13	980	L-10
081	L-600.02	181		281	L-12	381	L-16	481	L-20	581		681	L-6	781	L-7	881	L-13	981	L-10
082	L-600.02	182		282	L-12	382	L-16	482	L-20	582	L-25	682	L-6	782	L-7	882	L-13	982	L-10
083	L-600.02	183		283	L-12	383	L-16	483	L-20	583	L-25	683	L-6	783	L-7	883	L-13	983	L-10
084	L-600.02	184		284	L-12	384	L-16	484	L-20	584	L-25	684	L-6	784	L-7	884	L-13	984	L-10
085	L-600.02	185		285	L-12	385	L-16	485	L-21	585	L-25	685	L-6	785	L-7	885	L-13	985	L-10
086	L-600.02	186		286	L-12	386	L-16	486	L-21	586	L-25	686	L-6	786	L-7	886	L-13	986	L-10
087	L-600.02	187		287	L-12	387	L-17	487	L-21	587	L-25	687	L-6	787	L-7	887	L-13	987	L-10
088	L-600.02	188		288	L-12	388	L-17	488	L-21	588	L-25	688	L-6	788	L-7	888	L-13	988	L-10
089	L-600.02	189		289	L-12	389	L 17	489	L-21	589	L-25	689	L-6	789	L-7	889	L-13	989	L-10
090	L-600.02	190		290	L-12	390	L-17	490	L-21	590	L-25	690	L-6	790	L-7	890	L-13	990	L-10
091	L-600.02	191		291	L-12	391	L-17	491	L-21	591	L-25	691	L-6	791	L-7	891	L-13	991	
092	L-600.02	192		292	L-12	392	L-17	492	L-21	592	L-25	692	L-6	792	L-7	892	L-13	992	
093	L-600.02	193		293	L-12	393	L-17	493	L-21	593	L-25	693	L-6	793	L-7	893	L-13	993	
094	L-600.02	194		294	L-12	394	L-17	494	L-21	594	L-25	694	L-6	794	L-7	894	L-13	994	
095	L-600.02	195		295	L-12	395	L-17	495	L-21	595	L-25	695	L-6	795	L-7	895	L-13	995	
096	L-600.02	196		296	L-12	396	L-17	496	L-21	596	L-25	696	L-6	796	L-7	896	L-13	996	
097	L-600.02	197		297	L-12	397	L-17	497	L-21	597	L-25	697	L-6	797	L-7	897	L-13	997	
098	L-600.02	198		298	L-12	398	L-17	498	L-21	598	L-25	698	L-6	798	L-8	898	L-13	998	
099	L-600.02	199		299	L-12	399	L-17	499	L-21	599	L-25	699	L-6	799	L-8	899	L-13	999	

FORD MOTOR COMPANY
STANDARD PARTS

INDEX

THE TWO NUMBERS AT THE TOP OF THE NO. COLUMN ARE THE FIRST DIGITS OF THE FIVE DIGIT NUMBER AND FOLLOWING NUMBERS IN THE COLUMN ARE THE LAST THREE DIGITS OF THE FIVE DIGIT NUMBER.

No.	Page	No.	Page	No.	Page	No.	Page	No.	Page	No.	Page	No.	Page	No.	Page	No.	Page	No.	Page
88		88		88		88		88		88		88		88		88		88	
000		100		200		300		400	B-500.01	500	B-500.01	600	B-500.02	700		800		900	
001		101		201		301		401	B-500.01	501	B-500.01	601	B-500.02	701		801		901	
002		102		202		302		402	B-500.01	502	B-500.01	602	B-500.02	702		802		902	
003		103		203		303		403	B-500.01	503	B-500.01	603	B-500.02	703		803		903	
004		104		204		304		404	B-500.01	504	B-500.01	604	B-500.02	704		804		904	
005		105		205		305		405	B-500.01	505	B-500.01	605	B-500.02	705		805		905	
006		106		206		306		406	B-500.01	506	B-500.01	606	B-500.02	706		806		906	
007		107		207		307		407	B-500.01	507	B-500.01	607	B-500.02	707		807		907	
008		108		208		308		408	B-500.01	508	B-500.01	608	B-500.02	708		808		908	
009		109		209		309		409	B-500.01	509	B-500.01	609	B-500.02	709		809		909	
010		110		210		310		410	B-500.01	510	B-500.01	610	B-500.02	710		810		910	
011		111		211		311		411	B-500.01	511	B-500.01	611	B-500.02	711		811		911	
012		112		212		312		412	B-500.01	512	B-500.01	612	B-500.02	712		812		912	
013		113		213		313		413	B-500.01	513	B-500.01	613	B-500.02	713		813		913	
014		114		214		314		414	B-500.01	514	B-500.01	614	B-500.02	714		814		914	
015		115		215		315		415	B-500.01	515	B-500.01	615	B-500.02	715		815		915	
016		116		216		316		416	B-500.01	516	B-500.01	616	B-500.02	716		816		916	
017		117		217		317		417	B-500.01	517	B-500.01	617	B-500.02	717		817		917	
018		118		218		318		418	B-500.01	518	B-500.01	618	B-500.02	718		818		918	
019		119		219		319		419	B-500.01	519	B-500.01	619	B-500.02	719		819		919	
020		120		220		320		420	B-500.01	520	B-500.01	620	B-500.02	720		820		920	
021		121		221		321		421	B-500.01	521	B-500.01	621	B-500.02	721		821		921	
022		122		222		322		422	B-500.01	522	B-500.01	622	B-500.02	722		822		922	
023		123		223		323		423	B-500.01	523	B-500.01	623	B-500.02	723		823		923	
024		124		224		324		424	B-500.01	524	B-500.01	624	B-500.02	724		824		924	
025		125		225		325		425	B-500.01	525	B-500.01	625	B-500.02	725		825		925	
026		126		226		326		426	B-500.01	526	B-500.01	626	B-500.02	726		826		926	
027		127		227		327		427	B-500.01	527	B-500.01	627	B-500.02	727		827		927	
028		128		228		328		428	B-500.01	528	B-500.01	628	B-500.02	728		828		928	
029		129		229		329		429	B-500.01	529	B-500.01	629	B-500.02	729		829		929	
030		130		230		330		430	B-500.01	530	B-500.01	630	B-500.02	730		830		930	
031		131		231		331		431	B-500.01	531	B-500.01	631	B-500.02	731		831		931	
032		132		232		332		432	B-500.01	532	B-500.01	632	B-500.02	732		832		932	
033		133		233		333		433	B-500.01	533	B-500.01	633	B-500.02	733		833		933	
034		134		234		334		434	B-500.01	534	B-500.01	634	B-500.02	734		834		934	
035		135		235		335		435	B-500.01	535	B-500.01	635	B-500.02	735		835		935	
036		136		236		336		436	B-500.01	536	B-500.01	636	B-500.02	736		836		936	
037		137		237		337		437	B-500.01	537	B-500.01	637	B-500.02	737		837		937	
038		138		238		338		438	B-500.01	538	B-500.01	638	B-500.02	738		838		938	
039		139		239		339		439	B-500.01	539	B-500.01	639	B-500.02	739		839		939	
040		140		240		340		440	B-500.01	540	B-500.01	640	B-500.02	740		840		940	
041		141		241		341		441	B-500.01	541	B-500.01	641	B-500.02	741		841		941	
042		142		242		342		442	B-500.01	542	B-500.01	642	B-500.02	742		842		942	
043		143		243		343		443	B-500.01	543	B-500.01	643	B-500.02	743		843		943	
044		144		244		344		444	B-500.01	544	B-500.01	644	B-500.02	744		844		944	
045		145		245		345		445	B-500.01	545	B-500.01	645	B-500.02	745		845		945	
046		146		246		346		446	B-500.01	546	B-500.01	646	B-500.02	746		846		946	
047		147		247		347		447	B-500.01	547	B-500.01	647	B-500.02	747		847		947	
048		148		248		348		448	B-500.01	548	B-500.01	648	B-500.02	748		848		948	
049		149		249		349		449	B-500.01	549	B-500.01	649	B-500.02	749		849		949	
050		150		250		350	B-500.01	450	B-500.01	550	B-500.01	650	B-500.02	750		850		950	
051		151		251		351	B-500.01	451	B-500.01	551	B-500.02	651	B-500.02	751		851		951	
052		152		252		352	B-500.01	452	B-500.01	552	B-500.02	652	B-500.02	752		852		952	
053		153		253		353	B-500.01	453	B-500.01	553	B-500.02	653	B-500.02	753		853		953	
054		154		254		354	B-500.01	454	B-500.01	554	B-500.02	654	B-500.02	754		854		954	
055		155		255		355	B-500.01	455	B-500.01	555	B-500.02	655	B-500.02	755		855		955	
056		156		256		356	B-500.01	456	B-500.01	556	B-500.02	656	B-500.02	756		856		956	
057		157		257		357	B-500.01	457	B-500.01	557	B-500.02	657	B-500.02	757		857		957	
058		158		258		358	B-500.01	458	B-500.01	558	B-500.02	658	B-500.02	758		858		958	
059		159		259		359	B-500.01	459	B-500.01	559	B-500.02	659	B-500.02	759		859		959	
060		160		260		360	B-500.01	460	B-500.01	560	B-500.02	660	B-500.02	760		860		960	
061		161		261		361	B-500.01	461	B-500.01	561	B-500.02	661	B-500.02	761		861		961	
062		162		262		362	B-500.01	462	B-500.01	562	B-500.02	662	B-500.02	762		862		962	
063		163		263		363	B-500.01	463	B-500.01	563	B-500.02	663	B-500.02	763		863		963	
064		164		264		364	B-500.01	464	B-500.01	564	B-500.02	664	B-500.02	764		864		964	
065		165		265		365	B-500.01	465	B-500.01	565	B-500.02	665	B-500.02	765		865		965	
066		166		266		366	B-500.01	466	B-500.01	566	B-500.02	666	B-500.02	766		866		966	
067		167		267		367	B-500.01	467	B-500.01	567	B-500.02	667	B-500.02	767		867		967	
068		168		268		368	B-500.01	468	B-500.01	568	B-500.02	668	B-500.02	768		868		968	
069		169		269		369	B-500.01	469	B-500.01	569	B-500.02	669	B-500.02	769		869		969	
070		170		270		370	B-500.01	470	B-500.01	570	B-500.02	670	B-500.02	770		870		970	
071		171		271		371	B-500.01	471	B-500.01	571	B-500.02	671	B-500.02	771		871		971	
072		172		272		372	B-500.01	472	B-500.01	572	B-500.02	672	B-500.02	772		872		972	
073		173		273		373	B-500.01	473	B-500.01	573	B-500.02	673	B-500.02	773		873		973	
074		174		274		374	B-500.01	474	B-500.01	574	B-500.02	674	B-500.02	774		874		974	
075		175		275		375	B-500.01	475	B-500.01	575	B-500.02	675		775		875		975	
076		176		276		376	B-500.01	476	B-500.01	576	B-500.02	676		776		876		976	
077		177		277		377	B-500.01	477	B-500.01	577	B-500.02	677		777		877		977	
078		178		278		378	B-500.01	478	B-500.01	578	B-500.02	678		778		878		978	
079		179		279		379	B-500.01	479	B-500.01	579	B-500.02	679		779		879		979	
080		180		280		380	B-500.01	480	B-500.01	580	B-500.02	680		780		880		980	
081		181		281		381	B-500.01	481	B-500.01	581	B-500.02	681		781		881		981	
082		182		282		382	B-500.01	482	B-500.01	582	B-500.02	682		782		882		982	
083		183		283		383	B-500.01	483	B-500.01	583	B-500.02	683		783		883		983	
084		184		284		384	B-500.01	484	B-500.01	584	B-500.02	684		784		884		984	
085		185		285		385	B-500.01	485	B-500.01	585	B-500.02	685		785		885		985	
086		186		286		386	B-500.01	486	B-500.01	586	B-500.02	686		786		886		986	
087		187		287		387	B-500.01	487	B-500.01	587	B-500.02	687		787		887		987	
088		188		288		388	B-500.01	488	B-500.01	588	B-500.02	688		788		888		988	
089		189		289		389	B-500.01	489	B-500.01	589	B-500.02	689		789		889		989	
090		190		290		390	B-500.01	490	B-500.01	590	B-500.02	690		790		890		990	
091		191		291		391	B-500.01	491	B-500.01	591	B-500.02	691		791		891		991	
092		192		292		392	B-500.01	492	B-500.01	592	B-500.02	692		792		892		992	
093		193		293		393	B-500.01	493	B-500.01	593	B-500.02	693		793		893		993	
094		194		294		394	B-500.01	494	B-500.01	594	B-500.02	694		794		894		994	
095		195		295		395	B-500.01	495	B-500.01	595	B-500.02	695		795		895		995	
096		196		296		396	B-500.01	496	B-500.01	596	B-500.02	696		796		896		996	
097		197		297		397	B-500.01	497	B-500.01	597	B-500.02	697		797		897		997	
098		198		298		398	B-500.01	498	B-500.01	598	B-500.02	698		798		898		998	
099		199		299		399	B-500.01	499	B-500.01	599	B-500.02	699		799		899		999	

FORD MOTOR COMPANY
STANDARD PARTS

INDEX

THE TWO NUMBERS AT THE TOP OF THE NO. COLUMN ARE THE FIRST DIGITS OF THE FIVE DIGIT NUMBER AND FOLLOWING NUMBERS IN THE COLUMN ARE THE LAST THREE DIGITS OF THE FIVE DIGIT NUMBER.

No.	Page	No.	Page	No.	Page	No.	Page	No.	Page	No.	Page	No.	Page	No.	Page	No.	Page	No.	Page
89		89		89		89		89		89		89		89		89		89	
000		100	B-500.03	200	B-500.03	300	B-500.04	400	C-710.21	500	C-710.21	600	C-710.21	700	C-710.21	800	C-710.51	900	C-710.51
001		101	B-500.03	201	B-500.03	301	B-500.04	401	C-710.21	501	C-710.21	601	C-710.21	701	C-710.21	801	C-710.51	901	C-710.51
002		102	B-500.03	202	B-500.03	302	B-500.04	402	C-710.21	502	C-710.21	602	C-710.21	702	C-710.21	802	C-710.51	902	C-710.51
003		103	B-500.03	203	B-500.03	303	B-500.04	403	C-710.21	503	C-710.21	603	C-710.21	703	C-710.21	803	C-710.51	903	C-710.51
004		104	B-500.03	204	B-500.03	304	B-500.04	404	C-710.21	504	C-710.21	604	C-710.21	704	C-710.21	804	C-710.51	904	C-710.51
005		105	B-500.03	205	B-500.03	305	B-500.04	405	C-710.21	505	C-710.21	605	C-710.21	705	C-710.21	805	C-710.51	905	C-710.51
006		106	B-500.03	206	B-500.03	306	B-500.04	406	C-710.21	506	C-710.21	606	C-710.21	706	C-710.21	806	C-710.51	906	C-710.51
007		107	B-500.03	207	B-500.03	307	B-500.04	407	C-710.21	507	C-710.21	607	C-710.21	707	C-710.21	807	C-710.51	907	C-710.51
008		108	B-500.03	208	B-500.03	308	B-500.04	408	C-710.21	508	C-710.21	608	C-710.21	708	C-710.21	808	C-710.51	908	C-710.51
009		109	B-500.03	209	B-500.03	309	B-500.04	409	C-710.21	509	C-710.21	609	C-710.21	709	C-710.21	809	C-710.51	909	C-710.51
010		110	B-500.03	210	B-500.03	310	B-500.04	410	C-710.21	510	C-710.21	610	C-710.21	710	C-710.21	810	C-710.51	910	C-710.51
011		111	B-500.03	211	B-500.03	311	B-500.04	411	C-710.21	511	C-710.21	611	C-710.21	711	C-710.21	811	C-710.51	911	C-710.51
012		112	B-500.03	212	B-500.03	312	B-500.04	412	C-710.21	512	C-710.21	612	C-710.21	712	C-710.21	812	C-710.51	912	C-710.51
013		113	B-500.03	213	B-500.03	313	B-500.04	413	C-710.21	513	C-710.21	613	C-710.21	713	C-710.21	813	C-710.51	913	C-710.51
014		114	B-500.03	214	B-500.03	314	B-500.04	414	C-710.21	514	C-710.21	614	C-710.21	714	C-710.21	814	C-710.51	914	C-710.51
015		115	B-500.03	215	B-500.03	315	B-500.04	415	C-710.21	515	C-710.21	615	C-710.21	715	C-710.21	815	C-710.51	915	C-710.51
016		116	B-500.03	216	B-500.03	316	B-500.04	416	C-710.21	516	C-710.21	616	C-710.21	716	C-710.21	816	C-710.51	916	C-710.51
017		117	B-500.03	217	B-500.03	317	B-500.04	417	C-710.21	517	C-710.21	617	C-710.21	717	C-710.21	817	C-710.51	917	C-710.51
018		118	B-500.03	218	B-500.03	318	B-500.04	418	C-710.21	518	C-710.21	618	C-710.21	718	C-710.21	818	C-710.51	918	C-710.51
019		119	B-500.03	219	B-500.03	319	B-500.04	419	C-710.21	519	C-710.21	619	C-710.21	719	C-710.21	819	C-710.51	919	C-710.51
020		120	B-500.03	220	B-500.03	320	B-500.04	420	C-710.21	520	C-710.21	620	C-710.21	720	C-710.21	820	C-710.51	920	C-710.51
021		121	B-500.03	221	B-500.03	321	B-500.04	421	C-710.21	521	C-710.21	621	C-710.21	721	C-710.21	821	C-710.51	921	C-710.51
022		122	B-500.03	222	B-500.03	322	B-500.04	422	C-710.21	522	C-710.21	622	C-710.21	722	C-710.21	822	C-710.51	922	C-710.51
023		123	B-500.03	223	B-500.03	323	B-500.04	423	C-710.21	523	C-710.21	623	C-710.21	723	C-710.21	823	C-710.51	923	C-710.51
024		124	B-500.03	224	B-500.03	324	B-500.04	424	C-710.21	524	C-710.21	624	C-710.21	724	C-710.21	824	C-710.51	924	C-710.51
025		125	B-500.03	225	B-500.03	325	B-500.04	425	C-710.21	525	C-710.21	625	C-710.21	725		825	C-710.51	925	C-710.51
026		126	B-500.03	226	B-500.03	326	B-500.04	426	C-710.21	526	C-710.21	626	C-710.21	726		826	C-710.51	926	C-710.51
027		127	B-500.03	227	B-500.03	327	B-500.04	427	C-710.21	527	C-710.21	627	C-710.21	727		827	C-710.51	927	C-710.51
028		128	B-500.03	228	B-500.03	328	B-500.04	428	C-710.21	528	C-710.21	628	C-710.21	728		828	C-710.51	928	C-710.51
029		129	B-500.03	229	B-500.03	329	B-500.04	429	C-710.21	529	C-710.21	629	C-710.21	729		829	C-710.51	929	C-710.51
030		130	B-500.03	230	B-500.03	330	B-500.04	430	C-710.21	530	C-710.21	630	C-710.21	730	C-710.51	830	C-710.51	930	C-710.51
031		131	B-500.03	231	B-500.03	331	B-500.04	431	C-710.21	531	C-710.21	631	C-710.21	731	C-710.51	831	C-710.51	931	C-710.51
032		132	B-500.03	232	B-500.03	332	B-500.04	432	C-710.21	532	C-710.21	632	C-710.21	732	C-710.51	832	C-710.51	932	C-710.51
033		133	B-500.03	233	B-500.03	333	B-500.04	433	C-710.21	533	C-710.21	633	C-710.21	733	C-710.51	833	C-710.51	933	C-710.51
034		134	B-500.03	234	B-500.03	334	B-500.04	434	C-710.21	534	C-710.21	634	C-710.21	734	C-710.51	834	C-710.51	934	C-710.51
035		135	B-500.03	235	B-500.03	335	B-500.04	435	C-710.21	535	C-710.21	635	C-710.21	735	C-710.51	835	C-710.51	935	C-710.51
036		136	B-500.03	236	B-500.03	336	B-500.04	436	C-710.21	536	C-710.21	636	C-710.21	736	C-710.51	836	C-710.51	936	C-710.51
037		137	B-500.03	237	B-500.03	337	B-500.04	437	C-710.21	537	C-710.21	637	C-710.21	737	C-710.51	837	C-710.51	937	C-710.51
038		138	B-500.03	238	B-500.03	338	B-500.04	438	C-710.21	538	C-710.21	638	C-710.21	738	C-710.51	838	C-710.51	938	C-710.51
039		139	B-500.03	239	B-500.03	339	B-500.04	439	C-710.21	539	C-710.21	639	C-710.21	739	C-710.51	839	C-710.51	939	C-710.51
040		140	B-500.03	240	B-500.03	340	B-500.04	440	C-710.21	540	C-710.21	640	C-710.21	740	C-710.51	840	C-710.51	940	C-710.51
041		141	B-500.03	241	B-500.03	341	B-500.04	441	C-710.21	541	C-710.21	641	C-710.21	741	C-710.51	841	C-710.51	941	C-710.51
042		142	B-500.03	242	B-500.03	342	B-500.04	442	C-710.21	542	C-710.21	642	C-710.21	742	C-710.51	842	C-710.51	942	C-710.51
043		143	B-500.03	243	B-500.03	343	B-500.04	443	C-710.21	543	C-710.21	643	C-710.21	743	C-710.51	843	C-710.51	943	C-710.51
044		144	B-500.03	244	B-500.03	344	B-500.04	444	C-710.21	544	C-710.21	644	C-710.21	744	C-710.51	844	C-710.51	944	C-710.51
045		145	B-500.03	245	B-500.03	345	B-500.04	445	C-710.21	545	C-710.21	645	C-710.21	745	C-710.51	845	C-710.51	945	C-710.51
046		146	B-500.03	246	B-500.03	346	B-500.04	446	C-710.21	546	C-710.21	646	C-710.21	746	C-710.51	846	C-710.51	946	C-710.51
047		147	B-500.03	247	B-500.03	347	B-500.04	447	C-710.21	547	C-710.21	647	C-710.21	747	C-710.51	847	C-710.51	947	C-710.51
048		148	B-500.03	248	B-500.03	348	B-500.04	448	C-710.21	548	C-710.21	648	C-710.21	748	C-710.51	848	C-710.51	948	C-710.51
049		149	B-500.03	249	B-500.03	349	B-500.04	449	C-710.21	549	C-710.21	649	C-710.21	749	C-710.51	849	C-710.51	949	C-710.51
050	B-500.03	150	B-500.03	250	B-500.03	350	B-500.04	450	C-710.21	550	C-710.21	650	C-710.21	750	C-710.51	850	C-710.51	950	C-710.51
051	B-500.03	151	B-500.03	251	B-500.04	351	B-500.04	451	C-710.21	551	C-710.21	651	C-710.21	751	C-710.51	851	C-710.51	951	C-710.51
052	B-500.03	152	B-500.03	252	B-500.04	352	B-500.04	452	C-710.21	552	C-710.21	652	C-710.21	752	C-710.51	852	C-710.51	952	C-710.51
053	B-500.03	153	B-500.03	253	B-500.04	353	B-500.04	453	C-710.21	553	C-710.21	653	C-710.21	753	C-710.51	853	C-710.51	953	C-710.51
054	B-500.03	154	B-500.03	254	B-500.04	354	B-500.04	454	C-710.21	554	C-710.21	654	C-710.21	754	C-710.51	854	C-710.51	954	C-710.51
055	B-500.03	155	B-500.03	255	B-500.04	355	B-500.04	455	C-710.21	555	C-710.21	655	C-710.21	755	C-710.51	855	C-710.51	955	C-710.51
056	B-500.03	156	B-500.03	256	B-500.04	356	B-500.04	456	C-710.21	556	C-710.21	656	C-710.21	756	C-710.51	856	C-710.51	956	C-710.51
057	B-500.03	157	B-500.03	257	B-500.04	357	B-500.04	457	C-710.21	557	C-710.21	657	C-710.21	757	C-710.51	857	C-710.51	957	C-710.51
058	B-500.03	158	B-500.03	258	B-500.04	358	B-500.04	458	C-710.21	558	C-710.21	658	C-710.21	758	C-710.51	858	C-710.51	958	C-710.51
059	B-500.03	159	B-500.03	259	B-500.04	359	B-500.04	459	C-710.21	559	C-710.21	659	C-710.21	759	C-710.51	859	C-710.51	959	C-710.51
060	B-500.03	160	B-500.03	260	B-500.04	360	B-500.04	460	C-710.21	560		660	C-710.21	760	C-710.51	860	C-710.51	960	C-710.51
061	B-500.03	161	B-500.03	261	B-500.04	361	B-500.04	461	C-710.21	561		661	C-710.21	761	C-710.51	861	C-710.51	961	C-710.51
062	B-500.03	162	B-500.03	262	B-500.04	362	B-500.04	462	C-710.21	562		662	C-710.21	762	C-710.51	862	C-710.51	962	C-710.51
063	B-500.03	163	B-500.03	263	B-500.04	363	B-500.04	463	C-710.21	563		663	C-710.21	763	C-710.51	863	C-710.51	963	C-710.51
064	B-500.03	164	B-500.03	264	B-500.04	364	B-500.04	464	C-710.21	564		664	C-710.21	764	C-710.51	864	C-710.51	964	C-710.51
065	B-500.03	165	B-500.03	265	B-500.04	365	B-500.04	465	C-710.21	565	C-710.21	665	C-710.21	765	C-710.51	865	C-710.51	965	C-710.51
066	B-500.03	166	B-500.03	266	B-500.04	366	B-500.04	466	C-710.21	566	C-710.21	666	C-710.21	766	C-710.51	866	C-710.51	966	C-710.51
067	B-500.03	167	B-500.03	267	B-500.04	367	B-500.04	467	C-710.21	567	C-710.21	667	C-710.21	767	C-710.51	867	C-710.51	967	C-710.51
068	B-500.03	168	B-500.03	268	B-500.04	368	B-500.04	468	C-710.21	568	C-710.21	668	C-710.21	768	C-710.51	868	C-710.51	968	C-710.51
069	B-500.03	169	B-500.03	269	B-500.04	369	B-500.04	469	C-710.21	569	C-710.21	669	C-710.21	769	C-710.51	879	C-710.51	969	C-710.51
070	B-500.03	170	B-500.03	270	B-500.04	370	B-500.04	470	C-710.21	570	C-710.21	670	C-710.21	770	C-710.51	870	C-710.51	970	C-710.51
071	B-500.03	171	B-500.03	271	B-500.04	371	B-500.04	471	C-710.21	571	C-710.21	671	C-710.21	771	C-710.51	871	C-710.51	971	C-710.51
072	B-500.03	172	B-500.03	272	B-500.04	372	B-500.04	472	C-710.21	572	C-710.21	672	C-710.21	772	C-710.51	872	C-710.51	972	C-710.51
073	B-500.03	173	B-500.03	273	B-500.04	373	B-500.04	473	C-710.21	573	C-710.21	673	C-710.21	773	C-710.51	873	C-710.51	973	C-710.51
074	B-500.03	174	B-500.03	274	B-500.04	374	B-500.04	474	C-710.21	574	C-710.21	674	C-710.21	774	C-710.51	874	C-710.51	974	C-710.51
075	B-500.03	175	B-500.03	275	B-500.04	375		475	C-710.21	575	C-710.21	675	C-710.21	775	C-710.51	875	C-710.51	975	C-710.51
076	B-500.03	176	B-500.03	276	B-500.04	376		476	C-710.21	576	C-710.21	676	C-710.21	776	C-710.51	876	C-710.51	976	C-710.51
077	B-500.03	177	B-500.03	277	B-500.04	377		477	C-710.21	577	C-710.21	677	C-710.21	777	C-710.51	877	C-710.51	977	C-710.51
078	B-500.03	178	B-500.03	278	B-500.04	378		478	C-710.21	578	C-710.21	678	C-710.21	778	C-710.51	878	C-710.51	978	C-710.51
079	B-500.03	179	B-500.03	279	B-500.04	379		479	C-710.21	579	C-710.21	679	C-710.21	779	C-710.51	879	C-710.51	979	C-710.51
080	B-500.03	180	B-500.03	280	B-500.04	380		480	C-710.21	580	C-710.21	680	C-710.21	780	C-710.51	880	C-710.51	980	C-710.51
081	B-500.03	181	B-500.03	281	B-500.04	381		481	C-710.21	581	C-710.21	681	C-710.21	781	C-710.51	881	C-710.51	981	C-710.51
082	B-500.03	182	B-500.03	282	B-500.04	382		482	C-710.21	582	C-710.21	682	C-710.21	782	C-710.51	882	C-710.51	982	C-710.51
083	B-500.03	183	B-500.03	283	B-500.04	383		483	C-710.21	583	C-710.21	683	C-710.21	783	C-710.51	883	C-710.51	983	C-710.51
084	B-500.03	184	B-500.03	284	B-500.04	384		484	C-710.21	584	C-710.21	684	C-710.21	784	C-710.51	884	C-710.51	984	C-710.51
085	B-500.03	185	B-500.03	285	B-500.04	385		485	C-710.21	585	C-710.21	685	C-710.21	785	C-710.51	885	C-710.51	985	C-710.51
086	B-500.03	186	B-500.03	286	B-500.04	386		486	C-710.21	586	C-710.21	686	C-710.21	786	C-710.51	886	C-710.51	986	C-710.51
087	B-500.03	187	B-500.03	287	B-500.04	387		487	C-710.21	587	C-710.21	687	C-710.21	787	C-710.51	887	C-710.51	987	C-710.51
088	B-500.03	188	B-500.03	288	B-500.04	388		488	C-710.21	588	C-710.21	688	C-710.21	788	C-710.51	888	C-710.51	988	C-710.51
089	B-500.03	189	B-500.03	289	B-500.04	389		489	C-710.21	589	C-710.21	689	C-710.21	789	C-710.51	889	C-710.51	989	C-710.51
090	B-500.03	190	B-500.03	290	B-500.04	390		490	C-710.21	590	C-710.21	690	C-710.21	790	C-710.51	890		990	C-710.51
091	B-500.03	191	B-500.03	291	B-500.04	391		491	C-710.21	591	C-710.21	691	C-710.21	791	C-710.51	891		991	C-710.51
092	B-500.03	192	B-500.03	292	B-500.04	392		492	C-710.21	592	C-710.21	692	C-710.21	792	C-710.51	892		992	C-710.51
093	B-500.03	193	B-500.03	293	B-500.04	393		493	C-710.21	593	C-710.21	693	C-710.21	793	C-710.51	893		993	C-710.51
094	B-500.03	194	B-500.03	294	B-500.04	394		494	C-710.21	594	C-710.21	694	C-710.21	794	C-710.51	894		994	C-710.51
095	B-500.03	195	B-500.03	295	B-500.04	395		495	C-710.21	595	C-710.21	695	C-710.21	795	C-710.51	895	C-710.51	995	C-710.51
096	B-500.03	196	B-500.03	296	B-500.04	396		496	C-710.21	596	C-710.21	696	C-710.21	796	C-710.51	896	C-710.51	996	C-710.51
097	B-500.03	197	B-500.03	297	B-500.04	397		497	C-710.21	597	C-710.21	697	C-710.21	797	C-710.51	897	C-710.51	997	C-710.51
098	B-500.03	198	B-500.03	298	B-500.04	398		498	C-710.21	598	C-710.21	698	C-710.21	798	C-710.51	898	C-710.51	998	C-710.51
099	B-500.03	199	B-500.03	299	B-500.04	399		499	C-710.21	599	C-710.21	699	C-710.21	799	C-710.51	899	C-710.51	999	C-710.51

FORD MOTOR COMPANY
STANDARD PARTS

INDEX

THE TWO NUMBERS AT THE TOP OF THE NO. COLUMN ARE THE FIRST DIGITS OF THE FIVE DIGIT NUMBER AND FOLLOWING NUMBERS IN THE COLUMN ARE THE LAST THREE DIGITS OF THE FIVE DIGIT NUMBER.

No.	Page	No.	Page	No.	Page	No.	Page	No.	Page	No.	Page	No.	Page	No.	Page	No.	Page	No.	Page
90		90		90		90		90		90		90		90		90		90	
000	C-710.51	100	C-710.22	200	C-710.22	300	C-710.22	400	C-710.52	500	C-710.52	600	C-710.52	700		800		900	
001	C-710.51	101	C-710.22	201	C-710.22	301	C-710.22	401	C-710.52	501	C-710.52	601	C-710.52	701		801		901	
002	C-710.51	102	C-710.22	202	C-710.22	302	C-710.22	402	C-710.52	502	C-710.52	602	C-710.52	702		802		902	
003	C-710.51	103	C-710.22	203	C-710.22	303	C-710.22	403	C-710.52	503	C-710.52	603	C-710.52	703		803		903	
004	C-710.51	104	C-710.22	204	C-710.22	304	C-710.22	404	C-710.52	504	C-710.52	604	C-710.52	704		804		904	
005	C-710.51	105	C-710.22	205	C-710.22	305	C-710.22	405	C-710.52	505	C-710.52	605	C-710.52	705		805		905	
006	C-710.51	106	C-710.22	206	C-710.22	306	C-710.22	406	C-710.52	506	C-710.52	606	C-710.52	706		806		906	
007	C-710.51	107	C-710.22	207	C-710.22	307	C-710.22	407	C-710.52	507	C-710.52	607	C-710.52	707		807		907	
008	C-710.51	108	C-710.22	208		308	C-710.22	408	C-710.52	508	C-710.52	608	C-710.52	708		808		908	
009	C-710.51	109	C-710.22	209		309	C-710.22	409	C-710.52	509	C-710.52	609	C-710.52	709		809		909	
010	C-710.51	110	C-710.22	210		310	C-710.22	410	C-710.52	510	C-710.52	610	C-710.52	710		810		910	
011	C-710.51	111	C-710.22	211		311	C-710.22	411	C-710.52	511	C-710.52	611	C-710.52	711		811		911	
012	C-710.51	112	C-710.22	212		312	C-710.22	412	C-710.52	512	C-710.52	612	C-710.52	712		812		912	
013	C-710.51	113	C-710.22	213		313	C-710.22	413	C-710.52	513	C-710.52	613	C-710.52	713		813		913	
014	C-710.51	114	C-710.22	214		314	C-710.22	414	C-710.52	514	C-710.52	614	C-710.52	714		814		914	
015	C-710.51	115	C-710.22	215	C-710.22	315	C-710.22	415	C-710.52	515	C-710.52	615	C-710.52	715		815		915	
016	C-710.51	116	C-710.22	216	C-710.22	316	C-710.22	416	C-710.52	516	C-710.52	616	C-710.52	716		816		916	
017	C-710.51	117	C-710.22	217	C-710.22	317	C-710.22	417	C-710.52	517	C-710.52	617	C-710.52	717		817		917	
018	C-710.51	118	C-710.22	218	C-710.22	318	C-710.22	418	C-710.52	518		618	C-710.52	718		818		918	
019	C-710.51	119	C-710.22	219	C-710.22	319	C-710.22	419	C-710.52	519		619	C-710.52	719		819		919	
020	C-710.51	120	C-710.22	220	C-710.22	320	C-710.22	420	C-710.52	520		620	C-710.52	720		820		920	
021	C-710.51	121	C-710.22	221	C-710.22	321	C-710.22	421	C-710.52	521		621	C-710.52	721		821		921	
022	C-710.51	122	C-710.22	222	C-710.22	322	C-710.22	422	C-710.52	522		622	C-710.52	722		822		922	
023	C-710.51	123	C-710.22	223	C-710.22	323	C-710.22	423	C-710.52	523		623	C-710.52	723		823		923	
024	C-710.51	124	C-710.22	224	C-710.22	324	C-710.22	424	C-710.52	524		624	C-710.52	724		824		924	
025	C-710.51	125	C-710.22	225	C-710.22	325	C-710.22	425	C-710.52	525	C-710.52	625	C-710.52	725		825		925	
026	C-710.51	126	C-710.22	226	C-710.22	326	C-710.22	426	C-710.52	526	C-710.52	626	C-710.52	726		826		926	
027	C-710.51	127	C-710.22	227	C-710.22	327	C-710.22	427	C-710.52	527	C-710.52	627	C-710.52	727		827		927	
028	C-710.51	128	C-710.22	228	C-710.22	328	C-710.22	428	C-710.52	528	C-710.52	628	C-710.52	728		828		928	
029	C-710.51	129	C-710.22	229	C-710.22	329	C-710.22	429	C-710.52	529	C-710.52	629	C-710.52	729		829		929	
030	C-710.51	130	C-710.22	230	C-710.22	330	C-710.22	430	C-710.52	530	C-710.52	630	C-710.52	730		830		930	
031	C-710.51	131	C-710.22	231	C-710.22	331	C-710.22	431	C-710.52	531	C-710.52	631	C-710.52	731		831		931	
032	C-710.51	132	C-710.22	232	C-710.22	332	C-710.22	432	C-710.52	532	C-710.52	632	C-710.52	732		832		932	
033	C-710.51	133	C-710.22	233	C-710.22	333	C-710.22	433	C-710.52	533	C-710.52	633	C-710.52	733		833		933	
034	C-710.51	134	C-710.22	234	C-710.22	334	C-710.22	434	C-710.52	534	C-710.52	634	C-710.52	734		834		934	
035	C-710.51	135	C-710.22	235	C-710.22	335	C-710.22	435	C-710.52	535	C-710.52	635	C-710.52	735		835		935	
036	C-710.51	136	C-710.22	236	C-710.22	336	C-710.22	436	C-710.52	536	C-710.52	636	C-710.52	736		836		936	
037	C-710.51	137	C-710.22	237	C-710.22	337	C-710.22	437	C-710.52	537	C-710.52	637	C-710.52	737		837		937	
038	C-710.51	138	C-710.22	238	C-710.22	338	C-710.22	438	C-710.52	538	C-710.52	638	C-710.52	738		838		938	
039	C-710.51	139	C-710.22	239	C-710.22	339	C-710.22	439	C-710.52	539	C-710.52	639	C-710.52	739		839		939	
040	C-710.51	140	C-710.22	240	C-710.22	340	C-710.22	440	C-710.52	540	C-710.52	640	C-710.52	740		840		940	
041	C-710.51	141	C-710.22	241	C-710.22	341	C-710.22	441	C-710.52	541	C-710.52	641	C-710.52	741		841		941	
042	C-710.51	142	C-710.22	242	C-710.22	342	C-710.22	442	C-710.52	542	C-710.52	642	C-710.52	742		842		942	
043	C-710.51	143	C-710.22	243	C-710.22	343	C-710.22	443	C-710.52	543	C-710.52	643	C-710.52	743		843		943	
044	C-710.51	144	C-710.22	244	C-710.22	344	C-710.22	444	C-710.52	544	C-710.52	644	C-710.52	744		844		944	
045	C-710.51	145	C-710.22	245	C-710.22	345	C-710.22	445	C-710.52	545	C-710.52	645	C-710.52	745		845		945	
046	C-710.51	146	C-710.22	246	C-710.22	346	C-710.22	446	C-710.52	546	C-710.52	646	C-710.52	746		846		946	
047	C-710.51	147	C-710.22	247	C-710.22	347	C-710.22	447	C-710.52	547	C-710.52	647	C-710.52	747		847		947	
048	C-710.51	148	C-710.22	248	C-710.22	348	C-710.22	448	C-710.52	548	C-710.52	648	C-710.52	748		848		948	
049	C-710.51	149	C-710.22	249	C-710.22	349	C-710.22	449	C-710.52	549	C-710.52	649	C-710.52	749		849		949	
050	C-710.51	150	C-710.22	250	C-710.22	350	C-710.22	450	C-710.52	550	C-710.52	650	C-710.52	750		850		950	
051	C-710.51	151	C-710.22	251	C-710.22	351	C-710.22	451	C-710.52	551	C-710.52	651	C-710.52	751		851		951	
052	C-710.51	152	C-710.22	252	C-710.22	352	C-710.22	452	C-710.52	552	C-710.52	652	C-710.52	752		852		952	
053	C-710.51	153	C-710.22	253	C-710.22	353	C-710.22	453	C-710.52	553	C-710.52	653	C-710.52	753		853		953	
054	C-710.51	154	C-710.22	254	C-710.22	354	C-710.22	454	C-710.52	554	C-710.52	654	C-710.52	754		854		954	
055		155	C-710.22	255	C-710.22	355	C-710.22	455	C-710.52	555	C-710.52	655	C-710.52	755		855		955	
056		156	C-710.22	256	C-710.22	356	C-710.22	456	C-710.52	556	C-710.52	656	C-710.52	756		856		956	
057		157	C-710.22	257	C-710.22	357	C-710.22	457	C-710.52	557	C-710.52	657	C-710.52	757		857		957	
058		158	C-710.22	258	C-710.22	358	C-710.22	458	C-710.52	558	C-710.52	658	C-710.52	758		858		958	
059		159	C-710.22	259	C-710.22	359	C-710.22	459	C-710.52	559	C-710.52	659	C-710.52	759		859		959	
060	C-710.22	160	C-710.22	260	C-710.22	360	C-710.22	460	C-710.52	560	C-710.52	660	C-710.52	760		860		960	
061	C-710.22	161	C-710.22	261	C-710.22	361	C-710.22	461	C-710.52	561	C-710.52	661	C-710.52	761		861		961	
062	C-710.22	162	C-710.22	262	C-710.22	362	C-710.22	462	C-710.52	562	C-710.52	662	C-710.52	762		862		962	
063	C-710.22	163	C-710.22	263	C-710.22	363		463	C-710.52	563	C-710.52	663	C-710.52	763		863		963	
064	C-710.22	164	C-710.22	264	C-710.22	364		464	C-710.52	564	C-710.52	664	C-710.52	764		864		964	
065	C-710.22	165	C-710.22	265	C-710.22	365		465	C-710.52	565	C-710.52	665	C-710.52	765		865		965	
066	C-710.22	166	C-710.22	266	C-710.22	366		466	C-710.52	566	C-710.52	666	C-710.52	766		866		966	
067	C-710.22	167	C-710.22	267	C-710.22	367		467	C-710.52	567	C-710.52	667	C-710.52	767		867		967	
068	C-710.22	168	C-710.22	268	C-710.22	368		468	C-710.52	568	C-710.52	668	C-710.52	768		868		968	
069	C-710.22	169	C-710.22	269	C-710.22	369		469	C-710.52	569	C-710.52	669	C-710.52	769		879		969	
070	C-710.22	170	C-710.22	270	C-710.22	370	C-710.52	470	C-710.52	570	C-710.52	670	C-710.52	770		870		970	
071	C-710.22	171	C-710.22	271	C-710.22	371	C-710.52	471	C-710.52	571	C-710.52	671	C-710.52	771		871		971	
072	C-710.22	172	C-710.22	272	C-710.22	372	C-710.52	472	C-710.52	572	C-710.52	672	C-710.52	772		872		972	
073	C-710.22	173	C-710.22	273	C-710.22	373	C-710.52	473	C-710.52	573	C-710.52	673		773		873		973	
074	C-710.22	174	C-710.22	274	C-710.22	374	C-710.52	474	C-710.52	574	C-710.52	674		774		874		974	
075	C-710.22	175	C-710.22	275	C-710.22	375	C-710.52	475	C-710.52	575	C-710.52	675		775		875		975	
076	C-710.22	176	C-710.22	276	C-710.22	376	C-710.52	476	C-710.52	576	C-710.52	676		776		876		976	
077	C-710.22	177	C-710.22	277	C-710.22	377	C-710.52	477	C-710.52	577	C-710.52	677		777		877		977	
078	C-710.22	178	C-710.22	278	C-710.22	378	C-710.52	478	C-710.52	578	C-710.52	678		778		878		978	
079	C-710.22	179	C-710.22	279	C-710.22	379	C-710.52	479	C-710.52	579	C-710.52	679		779		879		979	
080	C-710.22	180	C-710.22	280	C-710.22	380	C-710.52	480	C-710.52	580	C-710.52	680		780		880		980	
081	C-710.22	181	C-710.22	281	C-710.22	381	C-710.52	481	C-710.52	581	C-710.52	681		781		881		981	
082	C-710.22	182	C-710.22	282	C-710.22	382	C-710.52	482	C-710.52	582	C-710.52	682		782		882		982	
083	C-710.22	183	C-710.22	283	C-710.22	383	C-710.52	483	C-710.52	583	C-710.52	683		783		883		983	
084	C-710.22	184	C-710.22	284	C-710.22	384	C-710.52	484	C-710.52	584	C-710.52	684		784		884		984	
085	C-710.22	185	C-710.22	285	C-710.22	385	C-710.52	485	C-710.52	585	C-710.52	685		785		885		985	
086	C-710.22	186	C-710.22	286	C-710.22	386	C-710.52	486	C-710.52	586	C-710.52	686		786		886		986	
087	C-710.22	187	C-710.22	287	C-710.22	387	C-710.52	487	C-710.52	587	C-710.52	687		787		887		987	
088	C-710.22	188	C-710.22	288	C-710.22	388	C-710.52	488	C-710.52	588	C-710.52	688		788		888		988	
089	C-710.22	189	C-710.22	289	C-710.22	389	C-710.52	489	C-710.52	589	C-710.52	689		789		889		989	
090	C-710.22	190	C-710.22	290	C-710.22	390	C-710.52	490	C-710.52	590	C-710.52	690		790		890		990	
091	C-710.22	191	C-710.22	291	C-710.22	391	C-710.52	491	C-710.52	591	C-710.52	691		791		891		991	
092	C-710.22	192	C-710.22	292	C-710.22	392	C-710.52	492	C-710.52	592	C-710.52	692		792		892		992	
093	C-710.22	193	C-710.22	293	C-710.22	393	C-710.52	493	C-710.52	593	C-710.52	693		793		893		993	
094	C-710.22	194	C-710.22	294	C-710.22	394	C-710.52	494	C-710.52	594	C-710.52	694		794		894		994	
095	C-710.22	195	C-710.22	295	C-710.22	395	C-710.52	495	C-710.52	595	C-710.52	695		795		895		995	
096	C-710.22	196	C-710.22	296	C-710.22	396	C-710.52	496	C-710.52	596	C-710.52	696		796		896		996	
097	C-710.22	197	C-710.22	297	C-710.22	397	C-710.52	497	C-710.52	597	C-710.52	697		797		897		997	
098	C-710.22	198	C-710.22	298	C-710.22	398	C-710.52	498	C-710.52	598	C-710.52	698		798		898		998	
099	C-710.22	199	C-710.22	299	C-710.22	399	C-710.52	499	C-710.52	599	C-710.52	699		799		899		999	

FORD MOTOR COMPANY
STANDARD PARTS

INDEX

THE TWO NUMBERS AT THE TOP OF THE NO. COLUMN ARE THE FIRST DIGITS OF THE FIVE DIGIT NUMBER AND FOLLOWING NUMBERS IN THE COLUMN ARE THE LAST THREE DIGITS OF THE FIVE DIGIT NUMBER.

No.	Page	No.	Page	No.	Page	No.	Page	No.	Page	No.	Page	No.	Page	No.	Page	No.	Page	No.	Page
91		91		91		91		91		91		91		91		91		91	
000		100		200	C-700.21	300	C-700.21	400	C-700.40	500	C-700.40	600	C-700.51	700	C-700.51	800	C-700.60	900	C-700.60
001		101		201	C-700.21	301	C-700.21	401	C-700.40	501	C-700.40	601	C-700.51	701	C-700.51	801	C-700.60	901	C-700.60
002		102		202	C-700.21	302	C-700.21	402	C-700.40	502	C-700.40	602	C-700.51	702	C-700.51	802	C-700.60	902	C-700.60
003		103		203	C-700.21	303	C-700.21	403	C-700.40	503	C-700.40	603	C-700.51	703	C-700.51	803	C-700.60	903	C-700.60
004		104		204	C-700.21	304	C-700.21	404	C-700.40	504	C-700.40	604	C-700.51	704	C-700.51	804	C-700.60	904	C-700.60
005		105		205	C-700.21	305	C-700.21	405	C-700.40	505	C-700.40	605	C-700.51	705	C-700.51	805	C-700.60	905	C-700.60
006		106		206	C-700.21	306	C-700.21	406	C-700.40	506	C-700.40	606	C-700.51	706	C-700.51	806	C-700.60	906	C-700.60
007		107		207	C-700.21	307	C-700.21	407	C-700.40	507	C-700.40	607	C-700.51	707	C-700.51	807	C-700.60	907	C-700.60
008		108		208	C-700.21	308	C-700.21	408	C-700.40	508	C-700.40	608	C-700.51	708	C-700.51	808	C-700.60	908	C-700.60
009		109		209	C-700.21	309	C-700.21	409	C-700.40	509	C-700.40	609	C-700.51	709	C-700.51	809	C-700.60	909	C-700.60
010		110		210	C-700.21	310	C-700.21	410	C-700.40	510	C-700.40	610	C-700.51	710	C-700.51	810	C-700.60	910	C-700.60
011		111		211	C-700.21	311	C-700.21	411	C-700.40	511	C-700.40	611	C-700.51	711	C-700.51	811	C-700.60	911	C-700.60
012		112		212	C-700.21	312	C-700.21	412	C-700.40	512	C-700.40	612	C-700.51	712	C-700.51	812	C-700.60	912	C-700.60
013		113		213	C-700.21	313	C-700.21	413	C-700.40	513	C-700.40	613	C-700.51	713	C-700.51	813	C-700.60	913	C-700.60
014		114		214	C-700.21	314	C-700.21	414	C-700.40	514	C-700.40	614	C-700.51	714	C-700.51	814	C-700.60	914	C-700.60
015		115		215	C-700.21	315	C-700.21	415	C-700.40	515	C-700.40	615	C-700.51	715	C-700.51	815	C-700.60	915	C-700.60
016		116		216	C-700.21	316	C-700.21	416	C-700.40	516	C-700.40	616	C-700.51	716	C-700.51	816	C-700.60	916	C-700.60
017		117		217	C-700.21	317	C-700.21	417	C-700.40	517	C-700.40	617	C-700.51	717	C-700.51	817	C-700.60	917	C-700.60
018		118		218	C-700.21	318	C-700.21	418	C-700.40	518	C-700.40	618	C-700.51	718	C-700.51	818	C-700.60	918	C-700.60
019		119		219	C-700.21	319	C-700.21	419	C-700.40	519	C-700.40	619	C-700.51	719	C-700.51	819	C-700.60	919	C-700.60
020		120		220	C-700.21	320	C-700.21	420	C-700.40	520	C-700.40	620	C-700.51	720	C-700.51	820	C-700.60	920	C-700.60
021		121		221	C-700.21	321	C-700.21	421	C-700.40	521	C-700.40	621	C-700.51	721	C-700.51	821	C-700.60	921	C-700.60
022		122		222	C-700.21	322	C-700.21	422	C-700.40	522	C-700.40	622	C-700.51	722	C-700.51	822	C-700.60	922	C-700.60
023		123		223	C-700.21	323	C-700.21	423	C-700.40	523	C-700.40	623	C-700.51	723	C-700.51	823	C-700.60	923	C-700.60
024		124		224	C-700.21	324	C-700.21	424	C-700.40	524	C-700.40	624	C-700.51	724	C-700.51	824	C-700.60	924	C-700.60
025		125	C-700.21	225	C-700.21	325	C-700.21	425	C-700.40	525	C-700.40	625	C-700.51	725	C-700.51	825	C-700.60	925	C-700.60
026		126	C-700.21	226	C-700.21	326	C-700.21	426	C-700.40	526	C-700.40	626	C-700.51	726	C-700.51	826	C-700.60	926	C-700.60
027		127	C-700.21	227	C-700.21	327	C-700.21	427	C-700.40	527	C-700.40	627	C-700.51	727	C-700.51	827	C-700.60	927	C-700.60
028		128	C-700.21	228	C-700.21	328	C-700.21	428	C-700.40	528	C-700.40	628	C-700.51	728	C-700.51	828	C-700.60	928	C-700.60
029		129	C-700.21	229	C-700.21	329	C-700.21	429	C-700.40	529	C-700.40	629	C-700.51	729	C-700.51	829	C-700.60	929	C-700.60
030		130	C-700.21	230	C-700.21	330	C-700.21	430	C-700.40	530	C-700.40	630	C-700.51	730	C-700.51	830	C-700.60	930	C-700.60
031		131	C-700.21	231	C-700.21	331	C-700.21	431	C-700.40	531	C-700.40	631	C-700.51	731	C-700.51	831	C-700.60	931	C-700.60
032		132	C-700.21	232	C-700.21	332	C-700.21	432	C-700.40	532	C-700.40	632	C-700.51	732	C-700.51	832	C-700.60	932	C-700.60
033		133	C-700.21	233	C-700.21	333	C-700.21	433	C-700.40	533	C-700.40	633	C-700.51	733	C-700.51	833	C-700.60	933	C-700.60
034		134	C-700.21	234	C-700.21	334	C-700.21	434	C-700.40	534	C-700.40	634	C-700.51	734	C-700.51	834	C-700.60	934	C-700.60
035		135	C-700.21	235	C-700.21	335	C-700.21	435	C-700.40	535	C-700.40	635	C-700.51	735	C-700.51	835	C-700.60	935	C-700.60
036		136	C-700.21	236	C-700.21	336	C-700.21	436	C-700.40	536	C-700.40	636	C-700.51	736	C-700.51	836	C-700.60	936	C-700.60
037		137	C-700.21	237	C-700.21	337	C-700.21	437	C-700.40	537	C-700.40	637	C-700.51	737	C-700.51	837	C-700.60	937	C-700.60
038		138	C-700.21	238	C-700.21	338	C-700.21	438	C-700.40	538	C-700.40	638	C-700.51	738	C-700.51	838	C-700.60	938	C-700.60
039		139	C-700.21	239	C-700.21	339	C-700.21	439	C-700.40	539	C-700.40	639	C-700.51	739	C-700.51	839	C-700.60	939	C-700.60
040		140	C-700.21	240	C-700.21	340	C-700.21	440	C-700.40	540	C-700.40	640	C-700.51	740	C-700.51	840	C-700.60	940	C-700.60
041		141	C-700.21	241	C-700.21	341		441	C-700.40	541	C-700.40	641	C-700.51	741	C-700.51	841	C-700.60	941	C-700.60
042		142	C-700.21	242	C-700.21	342		442	C-700.40	542	C-700.40	642	C-700.51	742	C-700.51	842	C-700.60	942	C-700.60
043		143	C-700.21	243	C-700.21	343		443	C-700.40	543	C-700.40	643	C-700.51	743	C-700.51	843	C-700.60	943	C-700.60
044		144	C-700.21	244	C-700.21	344		444	C-700.40	544	C-700.40	644	C-700.51	744	C-700.51	844	C-700.60	944	C-700.60
045		145	C-700.21	245	C-700.21	345		445	C-700.40	545	C-700.40	645	C-700.51	745	C-700.51	845	C-700.60	945	C-700.60
046		146	C-700.21	246	C-700.21	346		446	C-700.40	546	C-700.40	646	C-700.51	746	C-700.51	846	C-700.60	946	C-700.60
047		147	C-700.21	247	C-700.21	347		447	C-700.40	547	C-700.40	647	C-700.51	747	C-700.51	847	C-700.60	947	C-700.60
048		148	C-700.21	248	C-700.21	348		448	C-700.40	548	C-700.40	648	C-700.51	748	C-700.51	848	C-700.60	948	C-700.60
049		149	C-700.21	249	C-700.21	349		449	C-700.40	549	C-700.40	649	C-700.51	749	C-700.51	849	C-700.60	949	C-700.60
050		150	C-700.21	250	C-700.21	350	C-700.40	450	C-700.40	550	C-700.40	650	C-700.51	750	C-700.51	850	C-700.60	950	C-700.60
051		151	C-700.21	251	C-700.21	351	C-700.40	451	C-700.40	551	C-700.40	651	C-700.51	751	C-700.51	851	C-700.60	951	C-700.60
052		152	C-700.21	252	C-700.21	352	C-700.40	452	C-700.40	552	C-700.40	652	C-700.51	752	C-700.51	852	C-700.60	952	C-700.60
053		153	C-700.21	253	C-700.21	353	C-700.40	453	C-700.40	553	C-700.40	653	C-700.51	753	C-700.51	853	C-700.60	953	C-700.60
054		154	C-700.21	254	C-700.21	354	C-700.40	454	C-700.40	554	C-700.40	654	C-700.51	754	C-700.51	854	C-700.60	954	C-700.60
055		155	C-700.21	255	C-700.21	355	C-700.40	455	C-700.40	555	C-700.40	655	C-700.51	755	C-700.51	855	C-700.60	955	C-700.60
056		156	C-700.21	256	C-700.21	356	C-700.40	456	C-700.40	556	C-700.40	656	C-700.51	756	C-700.51	856	C-700.60	956	C-700.60
057		157	C-700.21	257	C-700.21	357	C-700.40	457	C-700.40	557	C-700.40	657	C-700.51	757	C-700.51	857	C-700.60	957	C-700.60
058		158	C-700.21	258	C-700.21	358	C-700.40	458	C-700.40	558	C-700.40	658	C-700.51	758	C-700.51	858	C-700.60	958	C-700.60
059		159	C-700.21	259	C-700.21	359	C-700.40	459	C-700.40	559	C-700.40	659	C-700.51	759	C-700.51	859	C-700.60	959	C-700.60
060		160	C-700.21	260	C-700.21	360	C-700.40	460	C-700.40	560	C-700.40	660	C-700.51	760	C-700.51	860	C-700.60	960	C-700.60
061		161	C-700.21	261	C-700.21	361	C-700.40	461	C-700.40	561	C-700.40	661	C-700.51	761	C-700.51	861	C-700.60	961	C-700.60
062		162	C-700.21	262	C-700.21	362	C-700.40	462	C-700.40	562	C-700.40	662	C-700.51	762	C-700.51	862	C-700.60	962	C-700.60
063		163	C-700.21	263	C-700.21	363	C-700.40	463	C-700.40	563	C-700.40	663	C-700.51	763	C-700.51	863	C-700.60	963	C-700.60
064		164	C-700.21	264	C-700.21	364	C-700.40	464	C-700.40	564	C-700.40	664	C-700.51	764	C-700.51	864	C-700.60	964	C-700.60
065		165	C-700.21	265	C-700.21	365	C-700.40	465	C-700.40	565	C-700.40	665	C-700.51	765	C-700.51	865	C-700.60	965	C-700.60
066		166	C-700.21	266	C-700.21	366	C-700.40	466	C-700.40	566		666	C-700.51	766	C-700.51	866	C-700.60	966	C-700.60
067		167	C-700.21	267	C-700.21	367	C-700.40	467	C-700.40	567		667	C-700.51	767	C-700.51	867	C-700.60	967	C-700.60
068		168	C-700.21	268	C-700.21	368	C-700.40	468	C-700.40	568		668	C-700.51	768	C-700.51	868	C-700.60	968	C-700.60
069		169	C-700.21	269	C-700.21	369	C-700.40	469	C-700.40	569		669	C-700.51	769	C-700.51	879	C-700.60	969	C-700.60
070		170	C-700.21	270	C-700.21	370	C-700.40	470	C-700.40	570		670	C-700.51	770	C-700.51	870	C-700.60	970	C-700.60
071		171	C-700.21	271	C-700.21	371	C-700.40	471	C-700.40	571		671	C-700.51	771	C-700.51	871	C-700.60	971	C-700.60
072		172	C-700.21	272	C-700.21	372	C-700.40	472	C-700.40	572		672	C-700.51	772	C-700.51	872	C-700.60	972	C-700.60
073		173	C-700.21	273	C-700.21	373	C-700.40	473	C-700.40	573		673	C-700.51	773	C-700.51	873	C-700.60	973	C-700.60
074		174	C-700.21	274	C-700.21	374	C-700.40	474	C-700.40	574		674	C-700.51	774	C-700.51	874	C-700.60	974	C-700.60
075		175	C-700.21	275	C-700.21	375	C-700.40	475	C-700.40	575	C-700.51	675	C-700.51	775	C-700.51	875	C-700.60	975	C-700.60
076		176	C-700.21	276	C-700.21	376	C-700.40	476	C-700.40	576	C-700.51	676	C-700.51	776	C-700.51	876	C-700.60	976	C-700.60
077		177	C-700.21	277	C-700.21	377	C-700.40	477	C-700.40	577	C-700.51	677	C-700.51	777	C-700.51	877	C-700.60	977	C-700.60
078		178	C-700.21	278	C-700.21	378	C-700.40	478	C-700.40	578	C-700.51	678	C-700.51	778	C-700.51	878	C-700.60	978	C-700.60
079		179	C-700.21	279	C-700.21	379	C-700.40	479	C-700.40	579	C-700.51	679	C-700.51	779	C-700.51	879	C-700.60	979	C-700.60
080		180	C-700.21	280	C-700.21	380	C-700.40	480	C-700.40	580	C-700.51	680	C-700.51	780	C-700.51	880	C-700.60	980	C-700.60
081		181	C-700.21	281	C-700.21	381	C-700.40	481	C-700.40	581	C-700.51	681	C-700.51	781	C-700.51	881	C-700.60	981	C-700.60
082		182	C-700.21	282	C-700.21	382	C-700.40	482	C-700.40	582	C-700.51	682	C-700.51	782	C-700.51	882	C-700.60	982	C-700.60
083		183	C-700.21	283	C-700.21	383	C-700.40	483	C-700.40	583	C-700.51	683	C-700.51	783	C-700.51	883	C-700.60	983	C-700.60
084		184	C-700.21	284	C-700.21	384	C-700.40	484	C-700.40	584	C-700.51	684	C-700.51	784	C-700.51	884	C-700.60	984	C-700.60
085		185	C-700.21	285	C-700.21	385	C-700.40	485	C-700.40	585	C-700.51	685	C-700.51	785	C-700.51	885	C-700.60	985	C-700.60
086		186	C-700.21	286	C-700.21	386	C-700.40	486	C-700.40	586	C-700.51	686	C-700.51	786	C-700.51	886	C-700.60	986	C-700.60
087		187	C-700.21	287	C-700.21	387	C-700.40	487	C-700.40	587	C-700.51	687	C-700.51	787	C-700.51	887	C-700.60	987	C-700.60
088		188	C-700.21	288	C-700.21	388	C-700.40	488	C-700.40	588	C-700.51	688	C-700.51	788	C-700.51	888	C-700.60	988	C-700.60
089		189	C-700.21	289	C-700.21	389	C-700.40	489	C-700.40	589	C-700.51	689	C-700.51	789	C-700.51	889	C-700.60	989	C-700.60
090		190	C-700.21	290	C-700.21	390	C-700.40	490	C-700.40	590	C-700.51	690	C-700.51	790	C-700.51	890	C-700.60	990	C-700.60
091		191	C-700.21	291	C-700.21	391	C-700.40	491	C-700.40	591	C-700.51	691	C-700.51	791		891	C-700.60	991	C-700.60
092		192	C-700.21	292	C-700.21	392	C-700.40	492	C-700.40	592	C-700.51	692	C-700.51	792		892	C-700.60	992	C-700.60
093		193	C-700.21	293	C-700.21	393	C-700.40	493	C-700.40	593	C-700.51	693	C-700.51	793		893	C-700.60	993	C-700.60
094		194	C-700.21	294	C-700.21	394	C-700.40	494	C-700.40	594	C-700.51	694	C-700.51	794		894	C-700.60	994	C-700.60
095		195	C-700.21	295	C-700.21	395	C-700.40	495	C-700.40	595	C-700.51	695	C-700.51	795		895	C-700.60	995	C-700.60
096		196	C-700.21	296	C-700.21	396	C-700.40	496	C-700.40	596	C-700.51	696	C-700.51	796		896	C-700.60	996	C-700.60
097		197	C-700.21	297	C-700.21	397	C-700.40	497	C-700.40	597	C-700.51	697	C-700.51	797		897	C-700.60	997	C-700.60
098		198	C-700.21	298	C-700.21	398	C-700.40	498	C-700.40	598	C-700.51	698	C-700.51	798		898	C-700.60	998	C-700.60
099		199	C-700.21	299	C-700.21	399	C-700.40	499	C-700.40	599	C-700.51	699	C-700.51	799		899	C-700.60	999	C-700.60

FORD MOTOR COMPANY
STANDARD PARTS

INDEX

THE TWO NUMBERS AT THE TOP OF THE NO. COLUMN ARE THE FIRST DIGITS OF THE FIVE DIGIT NUMBER AND FOLLOWING NUMBERS IN THE COLUMN ARE THE LAST THREE DIGITS OF THE FIVE DIGIT NUMBER.

No.	Page	No.	Page	No.	Page	No.	Page	No.	Page	No.	Page	No.	Page	No.	Page	No.	Page	No.	Page
92		92		92		92		92		92		92		92		92		92	
000	C-700.60	100		200		300		400		500		600		700		800		900	
001	C-700.60	101		201		301		401		501		601		701		801		901	
002	C-700.60	102		202		302		402		502		602		702		802		902	
003	C-700.60	103		203		303		403		503		603		703		803		903	
004	C-700.60	104		204		304		404		504		604		704		804		904	
005	C-700.60	105	D-260.02	205	D-220.01	305		405		505		605		705		805		905	
006	C-700.60	106	D-260.02	206	D-220.01	306		406		506		606		706		806		906	
007	C-700.60	107	D-260.02	207	D-220.01	307		407		507		607		707		807		907	
008	C-700.60	108	D-260.02	208	D-220.01	308		408		508		608		708		808		908	
009	C-700.60	109		209		309		409		509		609		709		809		909	
010	C-700.60	110		210		310		410		510		610		710		810		910	
011	C-700.60	111		211		311		411		511		611		711		811		911	
012	C-700.60	112		212		312		412		512		612		712		812		912	
013	C-700.60	113		213		313		413		513		613		713		813		913	
014	C-700.60	114		214		314		414		514		614		714		814		914	
015	C-700.60	115		215		315		415		515		615		715		815		915	
016		116		216		316		416		516		616		716		816		916	
017		117		217		317		417		517		617		717		817		917	
018		118		218		318		418		518		618		718		818		918	
019		119		219		319		419		519		619		719		819		919	
020		120		220		320		420		520		620		720		820		920	
021		121		221		321		421		521		621		721		821		921	
022		122		222		322		422		522		622		722		822		922	
023		123		223		323		423		523		623		723		823		923	
024		124		224		324		424		524		624		724		824		924	
025	D-260.02	125	D-220.01	225		325		425		525		625		725		825		925	
026	D-260.02	126	D-220.01	226		326		426		526		626		726		826		926	
027	D-260.02	127		227		327		427		527		627		727		827		927	
028	D-260.02	128		228		328		428		528		628		728		828		928	
029	D-260.02	129	D-220.01	229		329		429		529		629		729		829		929	
030	D-260.02	130	D-220.01	230		330		430		530		630		730		830		930	
031	D-260.02	131	D-220.01	231		331		431		531		631		731		831		931	
032	D-260.02	132		232		332		432		532		632		732		832		932	
033	D-260.02	133		233		333		433		533		633		733		833		933	
034	D-260.02	134		234		334		434		534		634		734		834		934	
035	D-260.02	135	D-220.01	235		335		435		535		635		735		835		935	
036	D-260.02	136	D-220.01	236		336		436		536		636		736		836		936	
037	D-260.02	137	D-220.01	237		337		437		537		637		737		837		937	
038	D-260.02	138	D-220.01	238		338		438		538		638		738		838		938	
039	D-260.02	139	D-220.01	239		339		439		539		639		739		839		939	
040	D-260.02	140	D-220.01	240		340		440		540		640		740		840		940	
041	D-260.02	141		241		341		441		541		641		741		841		941	
042	D-260.02	142		242		342		442		542		642		742		842		942	
043	D-260.02	143	D-220.01	243		343		443		543		643		743		843		943	
044	D-260.02	144	D-220.01	244		344		444		544		644		744		844		944	
045	D-260.02	145	D-220.01	245		345		445		545		645		745		845		945	
046	D-260.02	146	D-220.01	246		346		446		546		646		746		846		946	
047	D-260.02	147	D-220.01	247		347		447		547		647		747		847		947	
048	D-260.02	148	D-220.01	248		348		448		548		648		748		848		948	
049	D-260.02	149	D-220.01	249		349		449		549		649		749		849		949	
050	D-260.02	150		250		350		450		550		650		750		850		950	
051		151		251		351		451		551		651		751		851		951	
052		152		252		352		452		552		652		752		852		952	
053	D-260.02	153	D-220.01	253		353		453		553		653		753		853		953	
054	D-260.02	154	D-220.01	254		354		454		554		654		754		854		954	
055	D-260.02	155	D-220.01	255		355		455		555		655		755		855		955	
056	D-260.02	156	D-220.01	256		356		456		556		656		756		856		956	
057	D 260.02	157	D-220.01	257		357		457		557		657		757		857		957	
058	D-260.02	158	D-220.01	258		358		458		558		658		758		858		958	
059	D-260.02	159	D-220.01	259		359		459		559		659		759		859		959	
060	D-260.02	160		260		360		460		560		660		760		860		960	
061		161		261		361		461		561		661		761		861		961	
062		162		262		362		462		562		662		762		862		962	
063		163		263		363		463		563		663		763		863		963	
064		164		264		364		464		564		664		764		864		964	
065		165		265		365		465		565		665		765		865		965	
066		166		266		366		466		566		666		766		866		966	
067		167		267		367		467		567		667		767		867		967	
068		168		268		368		468		568		668		768		868		968	
069		169		269		369		469		569		669		769		869		969	
070		170		270		370		470		570		670		770		870		970	
071		171		271		371		471		571		671		771		871		971	
072		172		272		372		472		572		672		772		872		972	
073	D-260.02	173	D-220.01	273		373		473		573		673		773		873		973	
074	D-260.02	174	D-220.01	274		374		474		574		674		774		874		974	
075	D-260.02	175	D-220.01	275		375		475		575		675		775		875		975	
076	D-260.02	176	D-220.01	276		376		476		576		676		776		876		976	
077	D-260.02	177	D-220.01	277		377		477		577		677		777		877		977	
078	D-260.02	178	D-220.01	278		378		478		578		678		778		878		978	
079	D-260.02	179	D-220.01	279		379		479		579		679		779		879		979	
080	D-260.02	180	D-220.01	280		380		480		580		680		780		880		980	
081		181		281		381		481		581		681		781		881		981	
082		182		282		382		482		582		682		782		882		982	
083		183		283		383		483		583		683		783		883		983	
084		184		284		384		484		584		684		784		884		984	
085		185		285		385		485		585		685		785		885		985	
086		186		286		386		486		586		686		786		886		986	
087		187		287		387		487		587		687		787		887		987	
088		188		288		388		488		588		688		788		888		988	
089		189		289		389		489		589		689		789		889		989	
090		190		290		390		490		590		690		790		890		990	
091	D-260.02	191	D-220.01	291		391		491		591		691		791		891		991	
092	D-260.02	192	D-220.01	292		392		492		592		692		792		892		992	
093	D-260.02	193	D-220.01	293		393		493		593		693		793		893		993	
094	D-260.02	194	D-220.01	294		394		494		594		694		794		894		994	
095	D-260.02	195	D-220.01	295		395		495		595		695		795		895		995	
096	D-260.02	196	D-220.01	296		396		496		596		696		796		896		996	
097		197		297		397		497		597		697		797		897		997	
098		198		298		398		498		598		698		798		898		998	
099		199		299		399		499		599		699		799		899		999	

FORD MOTOR COMPANY
STANDARD PARTS

INDEX

THE TWO NUMBERS AT THE TOP OF THE NO. COLUMN ARE THE FIRST DIGITS OF THE FIVE DIGIT NUMBER AND FOLLOWING NUMBERS IN THE COLUMN ARE THE LAST THREE DIGITS OF THE FIVE DIGIT NUMBER.

No.	Page	No.	Page	No.	Page	No.	Page	No.	Page	No.	Page	No.	Page	No.	Page	No.	Page	No.	Page
95		95		95		95		95		95		95		95		95		95	
000		100		200		300		400		500	K-4	600	K-5	700		800	K-7	900	
001		101		201	K-2	301	K-2	401		501		601		701		801	K-7	901	
002		102		202		302		402		502		602		702		802	K-7	902	
003	K-1	103		203	K-2	303		403		503	K-4	603		703		803	K-7	903	
004	K-1	104		204		304		404		504	K-4	604		704		804	K-7	904	
005		105		205		305		405		505		605		705		805	K-7	905	
006	K-1	106		206		306		406		506		606	K-5	706	K-5	806	K-7	906	
007		107		207		307		407		507		607	K-5	707		807	K-7	907	
008		108		208		308		408		508	K-4	608	K-5	708		808	K-7	908	
009		109		209		309		409		509	K-4	609		709		809	K-7	909	
010		110		210		310		410		510	K-4	610		710		810	K-7	910	
011		111		211	K-2	311		411		511	K-4	611		711		811	K-7	911	
012	K-1	112		212		312		412		512		612		712		812	K-7	912	
013		113		213	K-2	313		413		513		613		713		813	K-7	913	
014		114		214		314		414		514		614		714		814	K-7	914	
015		115		215	K-2	315		415		515	K-6	615		715		815	K-7	915	
016		116		216		316		416		516	K-6	616		716		816	K-7	916	
017		117		217		317	K-2	417		517	K-6	617		717		817	K-7	917	
018		118		218		318		418		518		618		718		818	K-8	918	
019		119		219		319		419		519	K-6	619		719		819	K-8	919	
020		120		220		320		420		520	K-6	620		720		820	K-8	920	
021	K-1	121		221		321		421		521		621		721		821	K-8	921	
022	K-1	122		222		322		422		522	K-6	622		722		822	K-8	922	
023		123		223	K-2	323		423		523		623		723		823	K-8	923	
024		124		224		324		424		524		624		724		824	K-8	924	
025		125		225	K-2	325		425		525		625		725		825	K-8	925	
026		126		226		326		426		526		626	K-5	726		826	K-8	926	
027		127		227		327		427		527		627	K-5	727		827	K-8	927	
028		128		228		328		428		528		628	K-5	728		828	K-8	928	
029		129		229		329		429		529		629	K-5	729		829	K-8	929	
030		130		230		330		430		530		630	K-5	730		830	K-8	930	
031		131		231		331		431		531		631	K-5	731		831		931	
032		132		232		332		432		532		632	K-5	732		832		932	
033		133		233		333		433		533		633	K-5	733		833		933	
034		134		234		334		434		534		634		734		834		934	
035		135		235		335		435		535		635	K-5	735		835		935	
036		136		236		336		436		536		636	K-5	736		836		936	
037		137		237		337		437	K-2	537		637	K-5	737		837		937	
038		138		238		338		438		538		638	K-5	738		838		938	
039		139		239		339		439		539		639	K-5	739		839		939	
040		140		240		340		440		540		640	K-5	740		840		940	
041		141		241		341		441	K-2	541		641		741		841		941	
042		142		242		342		442	K-2	542		642		742		842		942	
043	K-1	143		243	K-2	343		443	K-2	543		643		743		843		943	
044	K-1	144		244		344		444		544		644		744		844		944	
045	K-1	145		245		345		445		545		645		745		845		945	
046	K-1	146		246		346		446		546		646		746		846		946	
047	K-1	147		247		347		447	K-2	547		647		747		847		947	
048		148		248		348		448		548		648		748		848		948	
049	K-1	149		249		349		449	K-2	549		649		749		849		949	
050		150		250		350		450	K-2	550		650		750		850		950	
051		151		251		351		451		551		651		751		851		951	
052		152		252		352		452	K-2	552		652		752		852		952	
053		153		253		353	K-2	453		553		653		753		853		953	
054		154		254		354		454		554		654		754		854		954	
055		155		255		355		455		555		655		755		855		955	
056		156		256		356		456		556		656		756		856		956	
057		157		257		357		457		557		657		757		857		957	
058		158		258		358		458		558	K-6	658		758		858		958	
059		159		259		359		459		559	K-6	659		759		859		959	
060		160		260		360		460	K-3	560	K-6	660		760		860		960	
061		161		261		361		461	K-3	561	K-6	661		761		861		961	
062		162		262		362		462		562		662		762		862		962	
063		163		263		363		463	K-3	563		663		763		863		963	
064		164		264		364		464	K-3	564		664		764		864		964	
065		165		265		365		465		565		665		765		865		965	
066		166		266		366		466		566	K-6	666		766		866		966	
067		167		267		367		467		567	K-6	667		767		867		967	
068		168		268		368		468		568	K-6	668		768		868		968	
069		169		269		369		469		569	K-6	669		769		869		969	
070		170		270		370		470		570		670		770		870		970	
071		171		271		371		471		571		671		771		871		971	
072		172		272		372		472	K-3	572		672		772		872		972	
073		173		273		373		473		573		673		773		873		973	
074		174		274		374		474		574		674		774		874		974	
075		175		275		375		475		575		675		775		875		975	
076		176		276		376		476		576		676		776		876		976	
077		177		277		377	K-2	477		577		677		777		877		977	
078		178		278		378		478		578		678		778		878		978	
079		179		279		379		479		579	K-5	679		779		879		979	
080		180		280		380		480		580		680		780		880		980	
081		181		281		381		481	K-3	581		681		781		881		981	
082		182		282		382		482		582		682		782		882		982	
083		183		283		383		483		583		683		783		883		983	
084		184		284		384		484		584		684		784		884		984	
085		185		285		385		485		585		685		785		885		985	
086		186		286		386		486		586		686		786		886		986	
087		187		287		387		487		587		687		787		887		987	
088		188		288		388		488		588		688		788		888		988	
089		189		289		389		489		589		689		789		889		989	
090		190		290		390		490		590		690		790		890		990	
091		191		291		391		491		591		691		791		891		991	
092		192		292		392		492		592		692		792		892		992	
093		193	K-2	293		393		493		593		693		793		893		993	
094		194		294		394		494		594		694		794		894		994	
095		195	K-2	295		395		495		595	K-5	695		795		895		995	
096		196		296		396		496	K-4	596		696		796		896		996	
097		197		297		397	K-2	497	K-4	597		697		797		897		997	
098		198		298		398		498	K-4	598	K-5	698		798		898		998	
099		199		299		399		499		599	K-5	699		799		899		999	

FORD MOTOR COMPANY
STANDARD PARTS

INDEX

THE TWO NUMBERS AT THE TOP OF THE NO. COLUMN ARE THE FIRST DIGITS OF THE FIVE DIGIT NUMBER AND FOLLOWING NUMBERS IN THE COLUMN ARE THE LAST THREE DIGITS OF THE FIVE DIGIT NUMBER.

No.	Page	No.	Page	No.	Page	No.	Page	No.	Page	No.	Page	No.	Page	No.	Page	No.	Page	No.	Page
97		97		97		97		97		97		97		97		97		97	
000	J-200.02	100		200	K-700.01	300	K-700.03	400	K-616.02	500	K-616.03	600	K-614.01	700	K-610.01	800	K-600.01	900	
001	J-200.02	101		201	K-700.01	301	K-700.03	401	K-616.02	501	K-616.03	601	K-614.01	701	K-610.01	801	K-600.01	901	
002	J-200.02	102		202	K-700.01	302	K-700.03	402	K-616.02	502	K-616.03	602	K-614.01	702	K-610.01	802	K-600.01	902	
003	J-200.02	103		203	K-700.01	303	K-700.03	403	K-616.02	503	K-616.03	603	K-603.02	703	K-610.01	803	K-600.01	903	
004	J-200.02	104		204	K-700.01	304	K-700.03	404	K-616.02	504	K-616.03	604	K-603.02	704	K-610.01	804	K-600.01	904	
005	J-200.02	105		205	K-700.01	305	K-700.03	405	K-616.02	505	K-616.03	605	K-603.02	705	K-610.01	805	K-600.01	905	
006		106		206	K-700.01	306	K-700.03	406	K-616.02	506	K-616.03	606	K-603.02	706	K-610.01	806	K-600.01	906	
007	J-200.02	107		207	K-700.01	307	K-700.03	407	K-616.02	507	K-613.02	607	K-603.02	707	K-610.01	807	K-600.01	907	
008		108		208	K-700.01	308	K-700.03	408	K-616.02	508	K-613.02	608	K-603.02	708	K-610.01	808	K-600.01	908	
009		109		209	K-700.01	309	K-700.03	409	K-616.02	509	K-613.02	609	K-603.02	709	K-610.01	809	K-600.01	909	
010	J-200.03	110		210	K-700.01	310	K-700.03	410	K-616.02	510	K-613.02	610	K-603.02	710	K-610.01	810	K-600.01	910	
011	J-200.03	111		211	K-700.01	311	K-700.03	411	K-616.02	511	K-613.02	611	K-603.02	711	K-610.01	811	K-600.01	911	
012	J-200.03	112		212	K-700.01	312	K-700.03	412	K-616.02	512	K-613.02	612	K-603.02	712	K-610.01	812	K-600.01	912	
013	J-200.03	113		213	K-700.01	313	K-700.03	413	K-616.02	513	K-613.02	613	K-603.02	713	K-610.01	813	K-600.01	913	
014	J-200.03	114		214	K-700.01	314	K-700.03	414	K-616.02	514	K-613.02	614	K-603.02	714	K-610.01	814	K-600.01	914	
015	J-200.03	115		215	K-700.01	315	K-700.03	415	K-616.02	515	K-613.02	615	K-603.02	715	K-610.01	815	K-600.01	915	
016	J-200.03	116		216	K-700.01	316	K-700.03	416	K-616.02	516	K-613.02	616	K-603.02	716	K-610.01	816		916	
017	J-200.03	117		217	K-700.01	317	K-700.03	417	K-616.02	517	K-613.02	617	K-603.02	717	K-610.01	817		917	
018	J-200.03	118		218	K-700.01	318	K-700.03	418	K-616.02	518	K-613.02	618	K-603.02	718	K-610.01	818		918	
019		119		219	K-700.01	319	K-700.03	419	K-604.01	519	K-613.02	619	K-603.02	719	K-610.01	819		919	
020		120		220	K-700.01	320	K-700.03	420	K-604.01	520	K-613.02	620	K-603.02	720	K-610.01	820		920	
021		121		221	K-700.01	321	K-700.03	421	K-604.01	521	K-613.02	621	K-603.02	721	K-610.01	821		921	
022		122		222	K-700.01	322	K-700.03	422	K-604.01	522	K-613.02	622	K-603.02	722	K-610.01	822		922	
023		123		223	K-700.01	323	K-700.03	423	K-604.01	523	K-613.02	623	K-603.02	723	K-610.01	823		923	
024		124		224	K-700.01	324	K-700.04	424	K-604.01	524	K-613.02	624	K-603.02	724	K-610.01	824		924	
025		125		225	K-700.01	325	K-700.04	425	K-604.01	525	K-613.02	625	K-603.02	725	K-610.01	825		925	
026		126		226	K-700.01	326	K-700.04	426	K-604.01	526	K-613.02	626	K-603.02	726	K-610.01	826		926	
027		127		227	K-700.01	327	K-700.04	427	K-604.01	527	K-613.02	627	K-603.02	727	K-610.01	827		927	
028		128		228	K-700.01	328	K-700.04	428	K-604.01	528	K-613.02	628	K-603.02	728	K-610.01	828		928	
029		129		229	K-700.01	329	K-700.04	429	K-604.01	529	K-613.02	629	K-603.02	729	K-610.01	829		929	
030		130		230	K-700.01	330	K-700.04	430	K-604.01	530	K-613.02	630	K-603.02	730	K-610.01	830		930	
031		131		231	K-700.01	331	K-700.04	431	K-604.01	531	K-613.02	631	K-603.02	731	K-610.01	831		931	
032		132		232	K-700.01	332	K-700.04	432	K-604.01	532	K-613.02	632	K-603.02	732	K-610.01	832		932	
033		133		233	K-700.01	333	K-700.04	433	K-604.01	533	K-613.02	633	K-603.02	733	K-610.01	833		933	
034		134		234	K-700.01	334	K-700.04	434	K-604.01	534	K-613.02	634	K-603.02	734	K-610.01	834		934	
035		135		235	K-700.01	335	K-700.04	435	K-604.01	535	K-613.02	635	K-603.02	735	K-610.01	835		935	
036		136		236	K-700.01	336	K-700.04	436	K-604.01	536	K-613.02	636	K-603.02	736	K-610.01	836		936	
037		137		237	K-700.03	337	K-700.04	437	K-604.01	537	K-613.02	637	K-603.02	737	K-610.01	837		937	
038		138		238	K-700.03	338	K-700.04	438	K-604.01	538	K-613.02	638	K-603.02	738	K-610.01	838		938	
039		139		239	K-700.03	339	K-700.04	439	K-604.01	539	K-613.02	639	K-603.02	739	K-610.01	839		939	
040		140		240	K-700.03	340	K-700.04	440	K-604.01	540	K-613.02	640	K-603.02	740	K-610.01	840		940	
041		141		241	K-700.03	341	K-700.04	441	K-604.01	541	K-613.02	641	K-603.02	741	K-610.01	841		941	
042		142		242	K-700.03	342	K-700.04	442	K-604.01	542	K-613.02	642	K-603.02	742	K-610.01	842		942	
043		143		243	K-700.03	343	K-700.04	443	K-604.01	543	K-613.02	643	K-603.02	743	K-610.01	843		943	
044		144		244	K-700.03	344	K-700.04	444	K-604.01	544	K-613.02	644	K-603.02	744	K-610.01	844		944	
045		145		245	K-700.03	345	K-700.04	445	K-604.01	545	K-613.02	645	K-603.02	745	K-610.01	845		945	
046		146		246	K-700.03	346	K-700.04	446	K-604.01	546	K-613.02	646	K-603.02	746	K-610.01	846		946	
047		147		247	K-700.03	347	K-700.04	447	K-604.01	547	K-613.02	647	K-603.02	747	K-610.01	847		947	
048		148		248	K-700.03	348	K-700.04	448	K-604.01	548	K-613.02	648	K-615.02	748	K-610.01	848		948	
049		149		249	K-700.03	349	K-700.04	449	K-604.01	549	K-613.02	649	K-615.02	749	K-610.01	849		949	
050		150		250	K-700.03	350	K-700.04	450	K-604.01	550	K-613.02	650	K-615.02	750	K-610.01	850		950	
051		151		251	K-700.03	351	K-700.04	451	K-604.01	551	K-613.02	651	K-615.02	751	K-610.01	851		951	
052		152		252	K-700.03	352	K-700.04	452	K-604.01	552	K-613.02	652	K-615.02	752	K-610.01	852		952	
053		153		253	K-700.03	353	K-700.02	453	K-604.01	553	K-613.02	653	K-615.02	753	K-610.01	853		953	
054		154		254	K-700.03	354	K-700.02	454	K-604.01	554	K-613.02	654	K-615.02	754	K-610.01	854		954	
055		155		255	K-700.03	355	K-700.02	455	K-604.01	555	K-613.02	655	K-615.02	755	K-610.01	855		955	
056		156		256	K-700.03	356	K-700.02	456	K-604.01	556	K-613.02	656	K-615.02	756	K-610.01	856		956	
057		157		257	K-700.03	357	K-700.02	457	K-604.01	557	K-613.02	657	K-615.02	757	K-600.01	857		957	
058		158		258	K-700.03	358	K-700.02	458	K-604.01	558	K-613.02	658	K-615.02	758	K-600.01	858		958	
059		159		259	K-700.03	359	K-700.02	459	K-604.01	559	K-613.02	659	K-615.02	759	K-600.01	859		959	
060		160		260	K-700.03	360	K-700.02	460	K-616.01	560	K-614.01	660	K-615.02	760	K-600.01	860		960	
061		161		261	K-700.03	361	K-700.02	461	K-616.01	561	K-614.01	661	K-615.02	761	K-600.01	861		961	
062		162		262	K-700.03	362	K-700.02	462	K-616.01	562	K-614.01	662	K-615.02	762	K-600.01	862		962	
063		163		263	K-700.03	363	K-700.02	463	K-616.01	563	K-614.01	663	K-615.02	763	K-600.01	863		963	
064		164		264	K-700.03	364	K-700.02	464	K-616.01	564	K-614.01	664	K-615.02	764	K-600.01	864		964	
065		165		265	K-700.03	365	K-700.02	465	K-616.01	565	K-614.01	665	K-615.02	765	K-600.01	865		965	
066		166		266	K-700.03	366	K-700.02	466	K-616.01	566	K-614.01	666	K-615.02	766	K-600.01	866		966	
067		167		267	K-700.03	367	K-700.02	467	K-616.01	567	K-614.01	667	K-615.02	767	K-600.01	867		967	
068		168		268	K-700.03	368	K-700.02	468	K-616.01	568	K-614.01	668	K-615.02	768	K-600.01	868		968	
069		169		269	K-700.03	369	K-700.02	469	K-616.01	569	K-614.01	669	K-615.02	769	K-600.01	879		969	
070		170		270	K-700.03	370	K-700.02	470	K-616.01	570	K-614.01	670	K-615.02	770	K-600.01	870		970	
071		171		271	K-700.03	371	K-700.02	471	K-616.01	571	K-614.01	671	K-615.02	771	K-600.01	871		971	
072		172		272	K-700.03	372	K-700.02	472	K-616.01	572	K-614.01	672	K-615.02	772	K-600.01	872		972	
073		173		273	K-700.03	373	K-700.02	473	K-616.01	573	K-614.01	673	K-615.02	773	K-600.01	873		973	
074		174		274	K-700.03	374	K-700.02	474	K-616.01	574	K-614.01	674	K-615.02	774	K-600.01	874		974	
075		175		275	K-700.03	375	K-700.02	475	K-616.01	575	K-614.01	675	K-615.02	775	K-600.01	875		975	
076		176		276	K-700.03	376	K-700.02	476	K-616.01	576	K-614.01	676	K-615.02	776	K-600.01	876		976	
077		177		277	K-700.03	377	K-700.02	477	K-616.01	577	K-614.01	677	K-605.02	777	K-600.01	877		977	
078		178		278	K-700.03	378	K-700.02	478	K-616.01	578	K-614.01	678	K-605.02	778	K-600.01	878		978	
079		179		279	K-700.03	379	K-700.02	479	K-616.01	579	K-614.01	679	K-605.02	779	K-600.01	879		979	
080		180		280	K-700.03	380	K-700.02	480	K-616.01	580	K-614.01	680	K-605.02	780	K-600.01	880		980	
081		181		281	K-700.03	381	K-700.02	481	K-616.01	581	K-614.01	681	K-605.02	781	K-600.01	881		981	
082		182		282	K-700.03	382	K-700.02	482	K-616.01	582	K-614.01	682	K-605.02	782	K-600.01	882		982	
083		183		283	K-700.03	383	K-700.02	483	K-616.01	583	K-614.01	683	K-605.02	783	K-600.01	883		983	
084		184		284	K-700.03	384	K-700.02	484	K-616.01	584	K-614.01	684	K-605.02	784	K-600.01	884		984	
085		185		285	K-700.03	385	K-700.02	485	K-616.01	585	K-614.01	685	K-605.02	785	K-600.01	885		985	
086		186		286	K-700.03	386	K-700.02	486	K-616.01	586	K-614.01	686	K-605.02	786	K-600.01	886		986	
087		187		287	K-700.03	387	K-700.02	487	K-616.01	587	K-614.01	687	K-605.02	787	K-600.01	887		987	
088		188		288	K-700.03	388	K-700.02	488	K-616.01	588	K-614.01	688	K-605.02	788	K-600.01	888		988	
089		189		289	K-700.03	389	K-700.02	489	K-616.01	589	K-614.01	689	K-605.02	789	K-600.01	889		989	
090		190		290	K-700.03	390		490	K-616.03	590	K-614.01	690	K-605.02	790	K-600.01	890		990	
091		191		291	K-700.03	391		491	K-616.03	591	K-614.01	691	K-605.02	791	K-600.01	891		991	
092		192		292	K-700.03	392		492	K-616.03	592	K-614.01	692	K-605.02	792	K-600.01	892		992	
093		193		293	K-700.03	393		493	K-616.03	593	K-614.01	693	K-605.02	793	K-600.01	893		993	
094		194		294	K-700.03	394		494	K-616.03	594	K-614.01	694	K-605.02	794	K-600.01	894		994	
095		195		295	K-700.03	395		495	K-616.03	595	K-614.01	695	K-605.02	795	K-600.01	895		995	
096		196		296	K-700.03	396		496	K-616.03	596	K-614.01	696	K-605.02	796	K-600.01	896		996	
097		197		297	K-700.03	397		497	K-616.03	597	K-614.01	697	K-605.02	797	K-600.01	897		997	
098		198		298	K-700.03	398		498	K-616.03	598	K-614.01	698	K-610.01	798	K-600.01	898		998	
099		199		299	K-700.03	399		499	K-616.03	599	K-614.01	699	K-610.01	799	K-600.01	899		999	

FORD MOTOR COMPANY
STANDARD PARTS

INDEX

THE THREE NUMBERS AT THE TOP OF THE NO. COLUMN ARE THE FIRST DIGITS OF THE SIX DIGIT NUMBER AND FOLLOWING NUMBERS IN THE COLUMN ARE THE LAST THREE DIGITS OF THE SIX DIGIT NUMBER.

No.	Page	No.	Page	No.	Page	No.	Page	No.	Page	No.	Page	No.	Page	No.	Page	No.	Page	No.	Page
300		300		300		300		300		300		300		300		300		300	
000		100		200		300		400		500		600		700		800		900	B-201.05
001		101		201		301		401		501		601		701		801		901	B-201.05
002		102		202		302		402		502		602		702		802		902	B-201.05
003		103		203		303		403		503		603		703		803		903	B-201.05
004		104		204		304		404		504		604		704		804		904	B-201.05
005	C-720.21	105		205		305		405		505		605		705	B-460.02	805		905	B-201.05
006		106		206		306		406		506		606		706		806		906	B-201.05
007		107		207		307		407		507		607		707		807		907	B-201.05
008		108		208		308	B-460.03	408		508		608		708		808		908	B-201.05
009		109		209		309		409		509		609		709		809		909	B-201.05
010		110		210		310		410		510		610		710		810		910	B-201.05
011		111		211		311		411		511		611		711		811		911	B-201.05
012		112		212		312		412		512		612		712		812	B-460.02	912	B-201.05
013		113		213		313		413		513		613		713		813	B-460.02	913	B-201.05
014		114	B-460.03	214		314		414		514		614		714		814	B-460.02	914	B-201.05
015		115		215		315	B-460.03	415		515		615		715		815	B-460.02	915	B-201.05
016		116		216		316		416		516		616		716		816	B-460.02	916	B-201.05
017		117		217		317		417		517		617		717		817	B-460.02	917	B-201.05
018		118		218		318		418		518		618		718	B-460.02	818		918	B-201.05
019		119		219		319	B-460.03	419		519		619		719		819	B-460.02	919	B-201.05
020		120		220		320	B-460.03	420		520		620		720		820		920	B-201.06
021		121		221		321	B-460.03	421		521		621		721		821		921	B-201.06
022		122		222		322		422		522		622		722	B-460.02	822		922	B-201.05
023		123		223		323		423		523		623		723	B-460.02	823	B-460.02	923	B-201.05
024		124		224		324		424		524		624		724	B-460.02	824	B-460.02	924	B-201.05
025		125		225		325		425		525		625		725	B-460.02	825	B-460.02	925	B-201.05
026		126		226		326		426		526		626		726	B-460.02	826	B-460.02	926	B-201.05
027		127		227		327		427		527		627		727		827	B-460.02	927	B-201.05
028		128		228		328		428		528		628		728		828	B-460.02	928	B-201.05
029		129		229	B-460.03	329	B-460.03	429		529		629		729		829	B-460.02	929	B-201.05
030		130		230		330		430		530		630		730		830	B-460.02	930	B-201.06
031		131		231		331		431		531		631		731		831	B-460.02	931	B-201.06
032		132		232		332		432		532		632		732		832	B-460.02	932	B-201.05
033		133		233		333		433		533		633		733		833	B-460.02	933	B-201.05
034		134		234		334		434		534		634		734		834	B-460.02	934	B-201.05
035		135		235		335		435		535		635		735		835	B-460.02	935	B-201.05
036		136		236		336		436		536		636		736		836	B-460.02	936	B-201.05
037		137		237		337		437		537		637		737		837	B-460.02	937	B-201.05
038		138	C-720.21	238		338		438		538		638		738		838	B-460.02	938	B-201.05
039		139		239		339		439		539		639		739		839	B-460.02	939	B-201.05
040		140	C-720.21	240		340		440		540		640		740		840	B-460.02	940	B-201.06
041		141	C-720.21	241		341		441		541		641		741		841	B-460.02	941	B-201.06
042		142	C-720.22	242		342	B-460.02	442		542		642		742		842		942	B-201.06
043		143		243		343	B-460.02	443		543		643		743		843		943	B-201.06
044		144		244		344	B-460.02	444		544		644		744		844		944	B-201.05
045		145		245		345		445		545		645		745		845		945	B-201.05
046		146		246		346	B-460.02	446		546		646		746		846	B-460.02	946	B-201.05
047		147		247		347		447		547		647		747		847	B-460.02	947	B-201.05
048		148		248		348		448		548		648		748		848	B-460.02	948	B-201.05
049		149		249		349		449		549		649		749		849	B-460.02	949	B-201.05
050		150		250		350		450		550		650		750		850	B-460.02	950	B-201.05
051		151		251		351		451		551		651		751		851	B-460.02	951	B-201.05
052		152		252		352		452		552		652		752		852	B-460.02	952	B-201.06
053		153		253		353	C-720.21	453		553		653	B-460.02	753		853	B-460.02	953	B-201.06
054		154		254		354		454		554		654	B-460.02	754		854		954	B-201.06
055		155		255		355	B-460.02	455		555		655	B-460.02	755		855		955	B-201.06
056		156		256		356	B-460.02	456		556		656	B-460.02	756		856		956	B-201.05
057		157		257		357	B-460.02	457		557		657	B-460.02	757		857		957	B-201.05
058		158		258		358	B-460.03	458	B-460.03	558		658	B-460.02	758		858	B-201.05	958	B-201.05
059		159		259		359	B-460.02	459		559		659	B-460.02	759		859	B-201.05	959	B-201.05
060		160		260		360		460	C-720.21	560		660	B-460.02	760		860	B-201.05	960	B-201.05
061		161		261		361		461		561		661	B-460.02	761		861	B-201.05	961	B-201.05
062		162		262		362		462		562		662		762		862	B-201.05	962	B-201.05
063		163		263	C-720.21	363		463		563		663	B-460.02	763		863	B-201.05	963	B-201.05
064		164		264		364		464		564		664		764		864	B-201.05	964	B-201.06
065		165		265		365		465		565		665	B-460.02	765		865	B-201.05	965	B-201.06
066		166		266		366		466		566		666		766		866	B-201.05	966	B-201.06
067		167		267		367		467		567		667		767		867	B-201.05	967	B-201.06
068		168		268		368		468		568		668		768		868	B-201.05	968	B-201.06
069		169		269		369	B-460.02	469		569		669		769		879	B-201.05	969	B-201.06
070		170		270		370		470		570		670		770		870	B-201.05	970	B-201.06
071		171		271		371	C-720.22	471		571		671		771		871	B-201.05	971	B-201.05
072		172		272		372		472		572		672		772		872	B-201.05	972	B-201.05
073		173		273		373		473		573		673		773		873	B-201.05	973	B-201.05
074		174		274		374	B-460.02	474		574		674		774		874	B-201.05	974	B-201.05
075		175		275		375		475		575		675		775		875	B-201.05	975	B-201.05
076		176		276		376		476		576		676		776		876	B-201.05	976	B-201.05
077		177		277		377		477		577		677		777		877	B-201.05	977	B-201.05
078		178		278		378		478		578		678	B-460.02	778		878	B-201.05	978	B-201.05
079		179		279		379		479		579		679		779		879	B-201.05	979	B-201.06
080		180		280		380		480		580		680	B-460.02	780		880	B-201.05	980	B-201.06
081		181		281		381		481		581		681		781		881	B-201.05	981	B-201.06
082		182		282		382		482		582		682		782		882	B-201.05	982	B-201.06
083		183		283		383		483		583		683		783		883	B-201.05	983	B-201.06
084		184		284		384		484		584		684		784		884	B-201.05	984	B-201.06
085		185		285		385		485		585		685		785		885	B-201.05	985	B-201.06
086		186		286		386		486		586		686		786		886	B-201.05	986	B-201.05
087		187		287		387		487		587		687		787		887	B-201.05	987	B-201.05
088		188		288		388		488		588		688		788		888	B-201.05	988	B-201.05
089		189		289		389		489		589		689		789		889	B-201.05	989	B-201.05
090		190		290		390		490		590		690		790		890	B-201.05	990	B-201.05
091		191		291		391		491		591		691		791		891	B-201.05	991	B-201.05
092		192		292		392		492		592		692		792		892	B-201.05	992	B-201.05
093		193		293		393		493		593		693		793		893	B-201.05	993	B-201.05
094		194		294		394		494		594		694		794		894	B-201.05	994	B-201.06
095		195		295		395		495		595		695		795		895	B-201.05	995	B-201.06
096		196		296		396		496		596		696		796		896	B-201.05	996	B-201.06
097		197		297		397		497		597		697		797		897	B-201.05	997	B-201.06
098		198		298		398		498		598		698		798		898	B-201.05	998	B-201.06
099		199		299		399		499		599		699		799		899	B-201.05	999	B-201.06

FORD MOTOR COMPANY
STANDARD PARTS

INDEX

THE THREE NUMBERS AT THE TOP OF THE NO. COLUMN ARE THE FIRST DIGITS OF THE SIX DIGIT NUMBER AND FOLLOWING NUMBERS IN THE COLUMN ARE THE LAST THREE DIGITS OF THE SIX DIGIT NUMBER.

No.	Page	No.	Page	No.	Page	No.	Page	No.	Page	No.	Page	No.	Page	No.	Page	No.	Page	No.	Page
301		301		301		301		301		301		301		301		301		301	
000	B-201.06	100		200	B-460.01	300		400		500	C-720.21	600	C-720.21	700	C-720.61	800	C-720.61	900	C-720.22
001	B-201.05	101		201	B-460.01	301	B-201.05	401	B-460.03	501	C-720.21	601	C-720.21	701	C-720.61	801	C-720.61	901	C-720.22
002	B-201.05	102		202	B-460.01	302	B-201.05	402		502	C-720.21	602	C-720.21	702	C-720.61	802	C-720.61	902	C-720.22
003	B-201.05	103		203	B-460.01	303	B-201.05	403		503	C-720.21	603	C-720.21	703	C-720.61	803	C-720.61	903	C-720.22
004	B-201.05	104		204	B-460.01	304	B-201.05	404		504	C-720.21	604	C-720.21	704	C-720.61	804	C-720.61	904	C-720.22
005	B-201.05	105	B-460.02	205	B-460.01	305	B-201.05	405		505	C-720.21	605	C-720.21	705	C-720.61	805	C-720.61	905	C-720.22
006	B-201.05	106	B-460.02	206	B-460.01	306	B-201.05	406		506	C-720.21	606	C-720.21	706	C-720.61	806	C-720.61	906	C-720.22
007	B-201.05	107	B-460.02	207		307	B-201.05	407		507	C-720.21	607	C-720.21	707	C-720.61	807	C-720.61	907	C-720.22
008	B-201.05	108	B-460.02	208	B-460.02	308	B-201.05	408		508	C-720.21	608	C-720.21	708	C-720.61	808	C-720.61	908	C-720.22
009	B-201.06	109	B-460.02	209	B-460.02	309	B-201.05	409		509	C-720.21	609	C-720.21	709	C-720.61	809	C-720.61	909	C-720.22
010	B-201.06	110	B-460.02	210	B-460.02	310	B-201.05	410	C-720.21	510	C-720.21	610	C-720.21	710	C-720.61	810	C-720.61	910	C-720.22
011	B-201.06	111	B-460.02	211	B-460.02	311	B-201.05	411	C-720.21	511	C-720.21	611	C-720.21	711	C-720.61	811	C-720.61	911	C-720.22
012	B-201.06	112	B-460.02	212	B-460.02	312	B-201.05	412	C-720.21	512	C-720.21	612	C-720.21	712	C-720.61	812	C-720.61	912	C-720.22
013	B-201.06	113	B-460.02	213	B-460.02	313	B-201.05	413	C-720.21	513	C-720.21	613	C-720.21	713	C-720.61	813	C-720.61	913	C-720.22
014	B-201.06	114	B-460.02	214	B-460.02	314	B-201.05	414	C-720.21	514	C-720.21	614	C-720.21	714	C-720.61	814	C-720.61	914	C-720.22
015	B-201.06	115		215	B-460.02	315	B-201.05	415	C-720.21	515	C-720.21	615	C-720.21	715	C-720.61	815	C-720.61	915	C-720.22
016		116	B-460.02	216	B-460.02	316	B-201.05	416	C-720.21	516	C-720.21	616	C-720.21	716	C-720.61	816	C-720.61	916	C-720.22
017		117		217	B-460.02	317	B-201.05	417	C-720.21	517	C-720.21	617	C-720.21	717	C-720.61	817	C-720.22	917	C-720.22
018		118	B-460.02	218	B-460.02	318	B-201.05	418		518	C-720.21	618	C-720.21	718	C-720.61	818	C-720.22	918	C-720.22
019		119	B-460.02	219	B-460.02	319	B-201.05	419	C-720.21	519	C-720.21	619	C-720.21	719	C-720.61	819	C-720.22	919	C-720.22
020		120	B-460.02	220	B-460.02	320	B-201.05	420	C-720.21	520	C-720.21	620	C-720.21	720	C-720.61	820	C-720.22	920	C-720.22
021		121	B-460.02	221	B-460.02	321	B-201.05	421	C-720.21	521	C-720.21	621	C-720.21	721	C-720.61	821	C-720.22	921	C-720.22
022	B-201.05	122	B-460.02	222	B-460.02	322	B-201.05	422	C-720.21	522	C-720.21	622	C-720.21	722	C-720.61	822	C-720.22	922	C-720.22
023	B-201.05	123	B-460.02	223	B-460.02	323	B-201.05	423	C-720.21	523	C-720.21	623	C-720.21	723	C-720.61	823	C-720.22	923	C-720.22
024	B-201.06	124	B-460.02	224	B-460.02	324	B-201.05	424	C-720.21	524	C-720.21	624	C-720.21	724	C-720.61	824	C-720.22	924	C-720.22
025	B-201.06	125	B-460.02	225	B-460.02	325	B-201.05	425	C-720.21	525	C-720.21	625	C-720.21	725	C-720.61	825		925	C-720.22
026	B-201.06	126	B-460.02	226	B-460.02	326	B-201.06	426	C-720.21	526	C-720.21	626	C-720.21	726	C-720.61	826	C-720.22	926	C-720.22
027	B-201.06	127	B-460.02	227	B-460.02	327	B-201.06	427		527	C-720.21	627	C-720.21	727	C-720.61	827	C-720.22	927	C-720.22
028	B-201.06	128	B-460.02	228	B-460.02	328	B-201.06	428	C-720.21	528	C-720.21	628	C-720.21	728	C-720.61	828	C-720.22	928	C-720.22
029	B-201.06	129	B-460.02	229		329	B-201.06	429	C-720.21	529	C-720.21	629	C-720.21	729	C-720.61	829	C-720.22	929	C-720.22
030	B-201.06	130	B-460.02	230		330	B-201.06	430	C-720.21	530	C-720.21	630	C-720.21	730	C-720.61	830	C-720.22	930	C-720.22
031		131	B-460.02	231		331	B-201.06	431	C-720.21	531	C-720.21	631	C-720.21	731	C-720.61	831	C-720.22	931	C-720.22
032		132	B-460.02	232		332	B-201.06	432	C-720.21	532	C-720.21	632	C-720.21	732	C-720.61	832	C-720.22	932	C-720.22
033		133	B-460.02	233		333	B-201.05	433		533	C-720.21	633	C-720.21	733	C-720.61	833	C-720.22	933	C-720.22
034		134	B-460.02	234		334	B-201.05	434		534	C-720.21	634	C-720.21	734	C-720.61	834	C-720.22	934	C-720.22
035		135	B-460.02	235		335	B-201.06	435		535	C-720.21	635	C-720.21	735	C-720.61	835	C-720.22	935	C-720.22
036		136	B-460.02	236		336	B-201.06	436	C-720.21	536	C-720.21	636	C-720.21	736	C-720.61	836	C-720.22	936	C-720.22
037		137		237		337	B-201.06	437	C-720.21	537	C-720.21	637	C-720.21	737	C-720.61	837	C-720.22	937	C-720.22
038		138	B-460.02	238		338	B-201.06	438	C-720.21	538	C-720.21	638	C-720.21	738	C-720.61	838	C-720.22	938	C-720.22
039		139		239		339	B-201.06	439	C-720.21	539	C-720.21	639	C-720.21	739	C-720.61	839	C-720.22	939	C-720.22
040	B-201.05	140	B-460.02	240		340	B-201.06	440	C-720.21	540	C-720.21	640	C-720.21	740	C-720.61	840	C-720.22	940	C-720.22
041	B-201.05	141		241		341	B-201.06	441	C-720.21	541	C-720.21	641	C-720.21	741	C-720.61	841	C-720.22	941	C-720.22
042	B-201.06	142	B-460.02	242		342	B-201.05	442	C-720.21	542	C-720.21	642	C-720.21	742	C-720.61	842	C-720.22	942	C-720.22
043	B-201.06	143	B-460.02	243		343	B-201.05	443	C-720.21	543	C-720.21	643	C-720.21	743	C-720.61	843	C-720.22	943	C-720.22
044	B-201.06	144		244		344	B-201.06	444	C-720.21	544	C-720.21	644	C-720.21	744	C-720.61	844	C-720.22	944	C-720.22
045	B-201.06	145	B-460.02	245		345	B-201.06	445	C-720.21	545	C-720.21	645	C-720.21	745	C-720.61	845	C-720.22	945	C-720.22
046	B-201.06	146	B-460.02	246		346	B-201.06	446	C-720.21	546	C-720.21	646	C-720.21	746	C-720.61	846	C-720.22	946	C-720.22
047	B-201.06	147		247		347	B-201.06	447	C-720.21	547	C-720.21	647	C-720.21	747	C-720.61	847	C-720.22	947	C-720.22
048	B-201.06	148		248		348	B-201.06	448	C-720.21	548	C-720.21	648	C-720.21	748	C-720.61	848	C-720.22	948	C-720.22
049		149		249		349	B-201.06	449	C-720.21	549	C-720.21	649	C-720.21	749	C-720.61	849	C-720.22	949	C-720.22
050		150	B-460.02	250		350	B-201.06	450	C-720.21	550	C-720.21	650	C-720.21	750	C-720.61	850	C-720.22	950	C-720.22
051		151	B-460.02	251		351	B-201.05	451	C-720.21	551	C-720.21	651	C-720.21	751	C-720.61	851	C-720.22	951	C-720.22
052		152		252		352	B-201.05	452	C-720.21	552	C-720.21	652	C-720.21	752	C-720.61	852	C-720.22	952	C-720.22
053		153	B-460.02	253		353	B-201.06	453	C-720.21	553	C-720.21	653	C-720.21	753	C-720.61	853	C-720.22	953	C-720.22
054		154		254		354	B-201.06	454	C-720.21	554	C-720.21	654	C-720.21	754	C-720.61	854	C-720.22	954	C-720.22
055		155	B-460.02	255		355	B-201.06	455	C-720.21	555	C-720.21	655	C-720.21	755	C-720.61	855	C-720.22	955	C-720.22
056		156	B-460.02	256		356	B-201.06	456	C-720.21	556	C-720.21	656	C-720.21	756	C-720.61	856	C-720.22	956	C-720.22
057		157	B-460.02	257		357	B-201.06	457	C-720.21	557	C-720.21	657	C-720.21	757	C-720.61	857	C-720.22	957	C-720.22
058	B-201.05	158	B-460.02	258		358	B-201.06	458	C-720.21	558	C-720.21	658	C-720.21	758	C-720.61	858	C-720.22	958	C-720.22
059	B-201.05	159	B-460.02	259		359	B-201.06	459	C-720.21	559	C-720.21	659	C-720.21	759	C-720.61	859	C-720.22	959	C-720.22
060	B-201.06	160	B-460.02	260		360		460	C-720.21	560	C-720.21	660	C-720.21	760	C-720.61	860	C-720.22	960	C-720.22
061	B-201.06	161	B-460.02	261		361		461	C-720.21	561	C-720.21	661	C-720.21	761	C-720.61	861	C-720.22	961	C-720.22
062	B-201.06	162	B-460.02	262		362		462	C-720.21	562	C-720.21	662	C-720.21	762	C-720.61	862	C-720.22	962	C-720.22
063	B-201.06	163	B-460.02	263		363		463	C-720.21	563	C-720.21	663	C-720.21	763	C-720.61	863	C-720.22	963	C-720.22
064	B-201.06	164	B-460.02	264		364		464	C-720.21	564	C-720.21	664	C-720.21	764	C-720.61	864	C-720.22	964	C-720.22
065	B-201.06	165	B-460.02	265		365		465		565	C-720.21	665	C-720.21	765	C-720.61	865	C-720.22	965	C-720.22
066	B-201.06	166	B-460.02	266		366		466	C-720.21	566	C-720.21	666	C-720.21	766	C-720.61	866	C-720.22	966	C-720.22
067		167	B-460.02	267		367		467	C-720.21	567	C-720.21	667	C-720.21	767	C-720.61	867	C-720.22	967	C-720.22
068		168	B-460.02	268		368		468	C-720.21	568	C-720.21	668	C-720.21	768	C-720.61	868	C-720.22	968	C-720.22
069		169	B-460.02	269		369		469	C-720.21	569	C-720.21	669	C-720.21	769	C-720.61	879	C-720.22	969	C-720.22
070		170		270		370		470	C-720.21	570	C-720.21	670	C-720.21	770	C-720.61	870	C-720.22	970	C-720.22
071		171		271		371		471	C-720.21	571	C-720.21	671	C-720.21	771	C-720.61	871	C-720.22	971	C-720.22
072		172		272		372		472	C-720.21	572	C-720.21	672	C-720.21	772	C-720.61	872	C-720.22	972	C-720.22
073		173		273		373		473		573	C-720.21	673	C-720.21	773	C-720.61	873	C-720.22	973	C-720.22
074		174	B-460.02	274		374		474	C-720.21	574	C-720.21	674	C-720.21	774	C-720.61	874	C-720.22	974	C-720.22
075		175	B-460.02	275		375		475	C-720.21	575	C-720.21	675	C-720.21	775	C-720.61	875	C-720.22	975	C-720.22
076	B-201.05	176	B-460.02	276		376		476	C-720.21	576	C-720.21	676	C-720.21	776	C-720.61	876	C-720.22	976	C-720.22
077	B-201.05	177	B-460.02	277		377		477	C-720.21	577	C-720.21	677	C-720.21	777	C-720.61	877	C-720.22	977	C-720.22
078	B-201.06	178		278		378		478	C-720.21	578	C-720.21	678	C-720.21	778	C-720.61	878	C-720.22	978	C-720.22
079	B-201.06	179	B-460.02	279		379		479	C-720.21	579	C-720.21	679	C-720.21	779	C-720.61	879	C-720.22	979	C-720.22
080	B-201.06	180		280		380		480	C-720.21	580	C-720.21	680	C-720.21	780	C-720.61	880	C-720.22	980	C-720.22
081	B-201.06	181	B-460.02	281		381		481	C-720.21	581	C-720.21	681	C-720.61	781	C-720.61	881	C-720.22	981	C-720.22
082	B-201.06	182	B-460.02	282		382		482	C-720.21	582	C-720.21	682	C-720.61	782	C-720.61	882	C-720.22	982	C-720.22
083	B-201.06	183	B-460.02	283		383		483	C-720.21	583	C-720.21	683	C-720.61	783	C-720.61	883	C-720.22	983	C-720.22
084	B-201.06	184	B-460.02	284		384	C-720.21	484	C-720.21	584	C-720.21	684	C-720.61	784	C-720.61	884	C-720.22	984	C-720.22
085		185	B-460.02	285		385		485	C-720.21	585	C-720.21	685	C-720.61	785	C-720.61	885	C-720.22	985	C-720.22
086		186	B-460.02	286		386		486	C-720.21	586	C-720.21	686	C-720.61	786	C-720.61	886	C-720.22	986	C-720.22
087		187	B-460.02	287		387		487	C-720.21	587	C-720.21	687	C-720.61	787	C-720.61	887	C-720.22	987	C-720.22
088		188	B-460.02	288		388		488	C-720.21	588	C-720.21	688	C-720.61	788	C-720.61	888	C-720.22	988	C-720.22
089		189	B-460.02	289		389		489	C-720.21	589	C-720.21	689	C-720.61	789	C-720.61	889	C-720.22	989	C-720.22
090		190	B-460.02	290		390		490	C-720.21	590	C-720.21	690	C-720.61	790	C-720.61	890	C-720.22	990	C-720.22
091		191	B-460.02	291		391		491	C-720.21	591	C-720.21	691	C-720.61	791	C-720.61	891	C-720.22	991	C-720.22
092		192	B-460.02	292		392		492	C-720.21	592	C-720.21	692	C-720.61	792	C-720.61	892	C-720.22	992	C-720.22
093		193	B-460.02	293		393		493	C-720.21	593	C-720.21	693	C-720.61	793	C-720.61	893	C-720.22	993	C-720.22
094		194	B-460.02	294		394		494	C-720.21	594	C-720.21	694	C-720.61	794	C-720.61	894	C-720.22	994	C-720.22
095		195	B-460.02	295		395		495	C-720.21	595	C-720.21	695	C-720.61	795	C-720.61	895	C-720.22	995	C-720.22
096		196	B-460.02	296		396		496	C-720.21	596	C-720.21	696	C-720.61	796	C-720.61	896	C-720.22	996	C-720.22
097		197	B-460.02	297		397		497	C-720.21	597	C-720.21	697	C-720.61	797	C-720.61	897	C-720.22	997	C-720.22
098		198	B-460.02	298		398		498	C-720.21	598	C-720.21	698	C-720.61	798	C-720.61	898	C-720.22	998	C-720.22
099		199	B-460.02	299		399		499	C-720.21	599	C-720.21	699	C-720.61	799	C-720.61	899	C-720.22	999	C-720.22

FORD MOTOR COMPANY
STANDARD PARTS

INDEX

THE THREE NUMBERS AT THE TOP OF THE NO. COLUMN ARE THE FIRST DIGITS OF THE SIX DIGIT NUMBER AND FOLLOWING NUMBERS IN THE COLUMN ARE THE LAST THREE DIGITS OF THE SIX DIGIT NUMBER.

No.	Page	No.	Page	No.	Page	No.	Page	No.	Page	No.	Page	No.	Page	No.	Page	No.	Page	No.	Page
302		302		302		302		302		302		302		302		302		302	
000	C-720.22	100	C-720.62	200		300		400	B-420.01	500	B-420.01	600	B-201.06	700		800	B-201.02	900	
001	C-720.22	101	C-720.62	201		301		401	B-420.01	501	B-420.01	601	B-201.06	701		801	B-201.02	901	
002	C-720.22	102	C-720.62	202		302		402	B-420.01	502	B-420.01	602	B-201.06	702		802	B-201.04	902	
003	C-720.22	103	C-720.62	203		303		403	B-420.01	503	B-420.01	603	B-201.06	703		803		903	
004	C-720.22	104	C-720.62	204		304		404	B-420.01	504	B-420.01	604	B-201.06	704		804		904	
005	C-720.22	105	C-720.62	205		305		405	B-420.01	505	B-420.01	605	B-201.06	705		805		905	
006	C-720.22	106	C-720.62	206		306		406	B-420.01	506	B-420.01	606	B-201.06	706		806		906	
007	C-720.22	107	C-720.62	207		307		407	B-420.01	507	B-420.01	607	B-201.06	707		807		907	
008	C-720.22	108	C-720.62	208		308		408	B-420.01	508	B-420.01	608	B-201.06	708		808		908	
009	C-720.22	109	C-720.62	209		309		409	B-420.01	509	B-420.01	609	B-201.06	709		809		909	
010	C-720.22	110	C-720.62	210		310		410	B-420.01	510	B-420.01	610	B-201.06	710		810		910	
011	C-720.22	111	C-720.62	211		311		411	B-420.01	511	B-420.01	611	B-201.06	711		811		911	
012	C-720.22	112	C-720.62	212		312		412	B-420.01	512	B-420.01	612	B-201.06	712		812		912	
013	C-720.22	113	C-720.62	213		313		413	B-420.01	513	B-420.01	613	B-201.06	713		813		913	
014	C-720.22	114	C-720.62	214		314		414	B-420.01	514	B-420.01	614	B-201.06	714		814		914	
015	C-720.22	115	C-720.62	215		315	B-420.01	415	B-420.01	515	B-420.01	615	B-201.06	715		815		915	
016	C-720.22	116	C-720.62	216		316	B-420.01	416	B-420.01	516	B-420.01	616	B-201.06	716		816		916	
017	C-720.22	117	C-720.62	217		317	B-420.01	417	B-420.01	517	B-420.01	617		717		817		917	
018	C-720.22	118	C-720.62	218		318	B-420.01	418	B-420.01	518	B-420.01	618		718		818		918	
019	C-720.22	119	C-720.62	219		319	B-420.01	419	B-420.01	519	B-420.01	619		719		819		919	
020	C-720.22	120	C-720.62	220		320	B-420.01	420	B-420.01	520	B-420.01	620		720		820		920	
021	C-720.22	121	C-720.62	221		321	B-420.01	421	B-420.01	521	B-420.01	621		721		821		921	B-201.04
022	C-720.22	122	C-720.62	222		322	B-420.01	422	B-420.01	522	B-420.01	622		722		822		922	B-201.04
023	C-720.22	123	C-720.62	223		323	B-420.01	423	B-420.01	523	B-420.01	623		723		823		923	B-201.04
024	C-720.22	124	C-720.62	224		324	B-420.01	424	B-420.01	524	B-420.01	624		724		824		924	B-201.04
025	C-720.22	125	C-720.62	225		325	B-420.01	425	B-420.01	525	B-420.01	625		725		825	B-201.02	925	B-201.04
026	C-720.22	126	C-720.62	226		326	B-420.01	426	B-420.01	526	B-420.01	626		726		826	B-201.02	926	B-201.04
027	C-720.22	127	C-720.62	227		327	B-420.01	427	B-420.01	527	B-420.01	627		727		827	B-201.02	927	B-201.04
028	C-720.22	128	C-720.62	228		328	B-420.01	428	B-420.01	528	B-420.01	628		728		828	B-201.02	928	B-201.04
029	C-720.22	129	C-720.62	229		329	B-420.01	429	B-420.01	529	B-420.01	629		729		829	B-201.02	929	B-201.04
030	C-720.22	130	C-720.62	230		330	B-420.01	430	B-420.01	530	B-420.01	630		730		830	B-201.02	930	B-201.04
031	C-720.22	131	C-720.62	231		331	B-420.01	431	B-420.01	531	B-420.01	631		731		831	B-201.02	931	B-201.04
032	C-720.22	132	C-720.62	232		332	B-420.01	432	B-420.01	532	B-420.01	632		732		832	B-201.02	932	
033	C-720.22	133	C-720.62	233		333	B-420.01	433	B-420.01	533	B-420.01	633		733		833	B-201.02	933	
034	C-720.22	134	C-720.62	234		334	B-420.01	434	B-420.01	534	B-420.01	634		734		834		934	
035	C-720.22	135	C-720.62	235		335	B-420.01	435	B-420.01	535	B-420.01	635		735		835		935	
036	C-720.22	136	C-720.62	236		336	B-420.01	436	B-420.01	536	B-420.01	636		736		836		936	
037	C-720.22	137	C-720.62	237		337	B-420.01	437	B-420.01	537	B-420.01	637		737		837		937	
038	C-720.22	138	C-720.62	238		338	B-420.01	438	B-420.01	538	B-420.01	638		738		838		938	
039	C-720.22	139	C-720.62	239		339	B-420.01	439	B-420.01	539	B-420.01	639		739		839		939	
040	C-720.62	140	C-720.62	240		340	B-420.01	440	B-420.01	540		640		740		840		940	
041	C-720.62	141	C-720.62	241		341	B-420.01	441	B-420.01	541		641		741		841		941	
042	C-720.62	142	C-720.62	242		342	B-420.01	442	B-420.01	542	B-420.01	642		742		842		942	
043	C-720.62	143	C-720.62	243		343	B-420.01	443	B-420.01	543		643		743		843		943	
044	C-720.62	144	C-720.62	244		344		444	B-420.01	544		644		744		844		944	
045	C-720.62	145	C-720.62	245		345	B-420.01	445	B-420.01	545		645		745	B-201.02	845		945	
046	C-720.62	146	C-720.62	246		346	B-420.01	446	B-420.01	546		646		746	B-201.02	846		946	
047	C-720.62	147	C-720.62	247		347	B-420.01	447	B-420.01	547		647		747	B-201.02	847		947	
048	C-720.62	148	C-720.62	248		348	B-420.01	448	B-420.01	548		648		748		848		948	
049	C-720.62	149	C-720.62	249		349	B-420.01	449	B-420.01	549	B-201.05	649		749		849		949	
050	C-720.62	150	C-720.62	250		350	B-420.01	450	B-420.01	550	B-201.05	650		750		850		950	
051	C-720.62	151	C-720.62	251		351	B-420.01	451	B-420.01	551	B-201.05	651		751		851		951	
052	C-720.62	152		252		352	B-420.01	452	B-420.01	552	B-201.05	652		752		852		952	
053	C-720.62	153		253		353	B-420.01	453	B-420.01	553	B-201.05	653		753		853		953	B-201.04
054	C-720.62	154		254		354	B-420.01	454	B-420.01	554	B-201.05	654		754		854		954	B-201.04
055	C-720.62	155		255		355	B-420.01	455	B-420.01	555	B-201.05	655		755		855		955	B-201.04
056	C-720.62	156		256		356	B-420.01	456	B-420.01	556	B-201.05	656		756		856		956	B-201.04
057	C-720.62	157		257		357	B-420.01	457	B-420.01	557	B-201.05	657		757		857	B-201.04	957	B-201.04
058	C-720.62	158		258		358	B-420.01	458	B-420.01	558	B-201.05	658		758		858	B-201.04	958	B-201.04
059	C-720.62	159		259		359	B-420.01	459	B-420.01	559	B-201.05	659		759		859	B-201.04	959	B-201.04
060	C-720.62	160		260		360	B-420.01	460	B-420.01	560	B-201.05	660		760		860	B-201.04	960	B-201.04
061	C-720.62	161		261		361	B-420.01	461	B-420.01	561	B-201.05	661		761		861	B-201.04	961	B-201.04
062	C-720.62	162		262		362	B-420.01	462	B-420.01	562	B-201.05	662		762		862	B-201.04	962	B-201.04
063	C-720.62	163		263		363	B-420.01	463	B-420.01	563	B-201.05	663		763		863	B-201.04	963	B-201.04
064	C-720.62	164		264		364	B-420.01	464	B-420.01	564	B-201.05	664		764		864	B-201.04	964	
065	C-720.62	165		265		365	B-420.01	465	B-420.01	565	B-201.05	665		765		865	B-201.04	965	
066	C-720.62	166		266		366	B-420.01	466	B-420.01	566	B-201.05	666		766		866	B-201.04	966	
067	C-720.62	167		267		367	B-420.01	467	B-420.01	567	B-201.05	667		767		867	B-201.04	967	
068	C-720.62	168		268		368	B-420.01	468	B-420.01	568	B-201.05	668		768		868		968	
069	C-720.62	169		269		369	B-420.01	469	B-420.01	569	B-201.05	669		769	B-201.02	879		969	
070	C-720.62	170		270		370	B-420.01	470	B-420.01	570	B-201.05	670		770	B-201.02	870		970	
071	C-720.62	171		271		371	B-420.01	471	B-420.01	571	B-201.05	671		771	B-201.02	871		971	
072	C-720.62	172		272		372	B-420.01	472	B-420.01	572	B-201.05	672		772		872		972	
073	C-720.62	173		273		373	B-420.01	473	B-420.01	573	B-201.05	673		773		873		973	
074	C-720.62	174		274		374	B-420.01	474	B-420.01	574	B-201.05	674		774		874		974	
075	C-720.62	175		275		375	B-420.01	475	B-420.01	575	B-201.05	675		775		875		975	
076	C-720.62	176		276		376	B-420.01	476	B-420.01	576	B-201.05	676		776		876		976	
077	C-720.62	177		277		377	B-420.01	477	B-420.01	577	B-201.05	677		777		877		977	
078	C-720.62	178		278		378	B-420.01	478	B-420.01	578	B-201.05	678		778		878		978	
079	C-720.62	179		279		379	B-420.01	479	B-420.01	579	B-201.05	679		779		879		979	
080	C-720.62	180		280		380	B-420.01	480	B-420.01	580	B-201.05	680		780		880		980	
081	C-720.62	181		281		381	B-420.01	481	B-420.01	581	B-201.05	681		781		881		981	
082	C-720.62	182		282		382	B-420.01	482	B-420.01	582	B-201.05	682		782		882		982	
083	C-720.62	183		283		383	B-420.01	483	B-420.01	583	B-201.05	683		783		883		983	
084	C-720.62	184		284		384	B-420.01	484	B-420.01	584	B-201.05	684		784		884		984	
085	C-720.62	185		285		385	B-420.01	485	B-420.01	585	B-201.05	685		785		885		985	B-201.04
086	C-720.62	186		286		386	B-420.01	486	B-420.01	586	B-201.05	686		786		886		986	B-201.04
087	C-720.62	187		287		387	B-420.01	487	B-420.01	587	B-201.05	687		787		887		987	B-201.04
088	C-720.62	188		288		388	B-420.01	488	B-420.01	588	B-201.05	688		788		888		988	B-201.04
089	C-720.62	189		289		389	B-420.01	489	B-420.01	589	B-201.06	689		789		889	B-201.04	989	B-201.04
090	C-720.62	190		290		390	B-420.01	490	B-420.01	590	B-201.06	690		790		890	B-201.04	990	B-201.04
091	C-720.62	191		291		391	B-420.01	491	B-420.01	591	B-201.06	691		791		891	B-201.04	991	B-201.04
092	C-720.62	192		292		392	B-420.01	492	B-420.01	592	B-201.06	692		792		892	B-201.04	992	B-201.04
093	C-720.62	193		293		393	B-420.01	493	B-420.01	593	B-201.06	693		793	B-201.02	893	B-201.04	993	B-201.04
094	C-720.62	194		294		394	B-420.01	494	B-420.01	594	B-201.06	694		794	B-201.02	894	B-201.04	994	B-201.04
095	C-720.62	195		295		395	B-420.01	495	B-420.01	595	B-201.06	695		795	B-201.02	895	B-201.04	995	B-201.04
096	C-720.62	196		296		396	B-420.01	496	B-420.01	596	B-201.06	696		796	B-201.02	896	B-201.04	996	
097	C-720.62	197		297		397	B-420.01	497	B-420.01	597	B-201.06	697		797	B-201.02	897	B-201.04	997	
098	C-720.62	198		298		398	B-420.01	498	B-420.01	598	B-201.06	698		798	B-201.02	898	B-201.04	998	
099	C-720.62	199		299		399	B-420.01	499	B-420.01	599		699		799	B-201.02	899	B-201.04	999	

FORD MOTOR COMPANY
STANDARD PARTS

INDEX

THE THREE NUMBERS AT THE TOP OF THE NO. COLUMN ARE THE FIRST DIGITS OF THE SIX DIGIT NUMBER AND FOLLOWING NUMBERS IN THE COLUMN ARE THE LAST THREE DIGITS OF THE SIX DIGIT NUMBER.

No.	Page	No.	Page	No.	Page	No.	Page	No.	Page	No.	Page	No.	Page	No.	Page	No.	Page	No.	Page
303		303		303		303		303		303		303		303		303		303	
000		100		200		300		400	B-460.03	500	B-460.03	600	B-460.03	700	B-460.02	800	B-460.02	900	
001		101		201		301		401	B-460.03	501	B-460.03	601	B-460.03	701	B-460.02	801	B-460.02	901	
002		102		202		302		402	B-460.03	502	B-460.03	602	B-460.03	702		802	B-460.02	902	
003		103		203		303		403	B-460.03	503	B-460.03	603	B-460.03	703		803	B-460.02	903	
004		104		204		304		404	B-460.03	504	B-460.03	604	B-460.03	704		804	B-460.02	904	
005		105		205		305		405	B-460.03	505	B-460.03	605	B-460.03	705		805	B-460.02	905	
006		106		206		306		406	B-460.03	506	B-460.03	606	B-460.03	706		806	B-460.02	906	
007		107		207		307		407	B-460.03	507	B-460.03	607	B-460.03	707		807	B-460.02	907	
008		108		208		308		408	B-460.03	508	B-460.03	608	B-460.03	708	B-460.02	808	B-460.02	908	
009		109		209		309		409	B-460.03	509	B-460.03	609	B-460.03	709	B-460.02	809	B-460.02	909	
010		110		210		310		410	B-460.03	510	B-460.03	610	B-460.03	710	B-460.02	810	B-460.02	910	
011		111		211		311		411	B-460.03	511	B-460.03	611	B-460.03	711	B-460.02	811	B-460.02	911	
012		112	B-201.04	212		312		412	B-460.03	512	B-460.03	612	B-460.03	712	B-460.02	812	B-460.02	912	
013		113	B-201.04	213		313		413	B-460.03	513	B-460.03	613	B-460.03	713	B-460.02	813	B-460.02	913	
014		114	B-201.04	214		314		414	B-460.03	514	B-460.03	614	B-460.03	714		814	B-460.02	914	
015		115	B-201.04	215		315	B-460.03	415	B-460.03	515	B-460.03	615	B-460.03	715		815	B-460.02	915	
016		116	B-201.04	216		316		416	B-460.03	516	B-460.03	616	B-460.03	716		816	B-460.02	916	
017	B-201.04	117	B-201.04	217		317		417	B-460.03	517	B-460.03	617	B-460.03	717		817	B-460.02	917	
018	B-201.04	118	B-201.04	218		318		418	B-460.03	518	B-460.03	618	B-460.03	718		818	B-460.02	918	
019	B-201.04	119	B-201.04	219		319		419	B-460.03	519	B-460.03	619	B-460.03	719		819	B-460.02	919	
020	B-201.04	120	B-201.04	220		320		420	B-460.03	520	B-460.03	620	B-460.03	720	B-460.02	820	B-460.02	920	
021	B-201.04	121	B-201.04	221		321		421	B-460.03	521	B-460.03	621	B-460.03	721	B-460.02	821	B-460.02	921	
022	B-201.04	122	B-201.04	222		322		422	B-460.03	522	B-460.03	622	B-460.03	722	B-460.02	822	B-460.02	922	
023	B-201.04	123		223		323	B-460.03	423	B-460.03	523	B-460.03	623	B-460.03	723	B-460.02	823	B-460.02	923	
024	B-201.04	124		224		324	B-460.03	424	B-460.03	524	B-460.03	624	B-460.03	724	B-460.02	824	B-460.02	924	
025	B-201.04	125		225		325	B-460.03	425	B-460.03	525	B-460.03	625	B-460.03	725	B-460.02	825	B-460.02	925	
026	B-201.04	126		226		326	B-460.03	426	B-460.03	526	B-460.03	626	B-460.03	726	B-460.02	826	B-460.02	926	
027	B-201.04	127		227		327	B-460.03	427	B-460.03	527	B-460.03	627	B-460.03	727	B-460.02	827	B-460.02	927	
028		128		228		328	B-460.03	428	B-460.03	528	B-460.03	628	B-460.03	728	B-460.02	828	B-460.02	928	
029		129		229		329	B-460.03	429	B-460.03	529	B-460.03	629	B-460.03	729	B-460.02	829	B-460.02	929	
030		130		230		330	B-460.03	430		530	B-460.03	630	B-460.03	730	B-460.02	830	B-460.02	930	
031		131		231		331	B-460.03	431		531	B-460.03	631	B-460.03	731	B-460.02	831	B-460.02	931	
032		132		232		332	B-460.03	432		532	B-460.03	632	B-460.03	732	B-460.02	832	B-460.02	932	
033		133		233		333	B-460.03	433		533	B-460.03	633	B-460.03	733	B-460.02	833	B-460.02	933	
034		134		234		334	B-460.03	434		534	B-460.03	634	B-460.03	734	B-460.02	834	B-460.03	934	
035		135		235		335	B-460.03	435		535	B-460.03	635	B-460.03	735	B-460.02	835		935	
036		136		236		336	B-460.03	436		536	B-460.03	636	B-460.03	736	B-460.02	836		936	
037		137		237		337	B-460.03	437		537	B-460.03	637	B-460.03	737	B-460.02	837	B-460.03	937	
038		138		238		338	B-460.03	438		538	B-460.03	638	B-460.03	738	B-460.02	838	B-460.03	938	
039		139		239		339	B-460.03	439		539	B-460.03	639	B-460.03	739	B-460.02	839	B-460.03	939	
040		140		240		340	B-460.03	440		540	B-460.03	640	B-460.03	740	B-460.02	840	B-460.03	940	
041		141		241		341	B-460.03	441		541	B-460.03	641	B-460.02	741	B-460.02	841	B-460.03	941	
042		142		242		342	B-460.03	442	B-460.02	542	B-460.03	642	B-460.02	742	B-460.02	842	B-460.03	942	
043		143		243		343	B-460.03	443	B-460.02	543	B-460.03	643	B-460.02	743	B-460.02	843	B-460.03	943	
044		144	B-201.04	244		344	B-460.03	444	B-460.02	544	B-460.03	644	B-460.02	744	B-460.02	844	B-460.03	944	
045		145	B-201.04	245		345	B-460.03	445	B-460.02	545	B-460.03	645	B-460.02	745	B-460.02	845	B-460.03	945	
046		146	B-201.04	246		346	B-460.03	446	B-460.02	546	B-460.03	646	B-460.02	746	B-460.02	846	B-460.03	946	
047		147	B-201.04	247		347	B-460.03	447	B-460.02	547	B-460.03	647	B-460.02	747	B-460.02	847	B-460.03	947	
048		148	B-201.04	248		348	B-460.03	448	B-460.02	548	B-460.03	648	B-460.02	748	B-460.02	848	B-460.03	948	
049	B-201.04	149	B-201.04	249		349	B-460.03	449	B-460.02	549	B-460.03	649	B-460.02	749	B-460.02	849		949	
050	B-201.04	150	B-201.04	250		350	B-460.03	450	B-460.02	550	B-460.03	650	B-460.02	750	B-460.02	850		950	
051	B-201.04	151	B-201.04	251		351	B-460.03	451	B-460.02	551	B-460.03	651	B-460.02	751	B-460.02	851		951	
052	B-201.04	152	B-201.04	252		352	B-460.03	452	B-460.02	552	B-460.03	652	B-460.02	752	B-460.02	852		952	
053	B-201.04	153	B-201.04	253		353	B-460.03	453	B-460.02	553	B-460.03	653	B-460.02	753	B-460.02	853		953	
054	B-201.04	154	B-201.04	254		354	B-460.03	454	B-460.02	554	B-460.03	654	B-460.02	754	B-460.02	854		954	
055	B-201.04	155		255		355	B-460.03	455	B-460.02	555	B-460.03	655	B-460.02	755	B-460.02	855		955	
056	B-201.04	156		256		356	B-460.03	456	B-460.02	556	B-460.03	656	B-460.02	756	B-460.02	856		956	
057	B-201.04	157		257		357	B-460.03	457	B-460.02	557	B-460.03	657		757	B-460.02	857		957	
058	B-201.04	158		258		358	B-460.03	458	B-460.02	558	B-460.03	658	B-460.02	758	B-460.02	858		958	
059	B-201.04	159		259		359	B-460.03	459	B-460.02	559	B-460.03	659	B-460.02	759	B-460.02	859		959	
060		160		260		360	B-460.03	460	B-460.02	560	B-460.03	660	B-460.02	760	B-460.02	860		960	
061		161		261		361	B-460.03	461	B-460.02	561	B-460.03	661	B-460.02	761	B-460.02	861		961	
062		162		262		362	B-460.03	462	B-460.02	562	B-460.03	662	B-460.02	762	B-460.02	862		962	
063		163		263		363	B-460.03	463	B-460.02	563	B-460.03	663	B-460.02	763	B-460.02	863		963	
064		164		264		364	B-460.03	464	B-460.02	564	B-460.03	664	B-460.02	764	B-460.02	864		964	
065		165		265		365	B-460.03	465	B-460.02	565	B-460.03	665	B-460.02	765	B-460.02	865		965	
066		166		266		366	B-460.03	466	B-460.02	566	B-460.03	666	B-460.02	766	B-460.02	866		966	
067		167		267		367	B-460.03	467	B-460.02	567	B-460.03	667	B-460.02	767	B-460.02	867		967	
068		168		268		368	B-460.03	468	B-460.02	568	B-460.03	668	B-460.02	768	B-460.02	868		968	
069		169		269		369	B-460.03	469	B-460.02	569	B-460.03	669	B-460.02	769	B-460.02	879		969	
070		170		270		370	B-460.03	470	B-460.02	570	B-460.03	670	B-460.02	770	B-460.02	870		970	
071		171		271		371	B-460.03	471	B-460.02	571	B-460.03	671	B-460.02	771	B-460.02	871		971	
072		172		272		372	B-460.03	472	B-460.02	572	B-460.03	672	B-460.02	772	B-460.02	872		972	
073		173		273		373	B-460.03	473	B-460.02	573	B-460.03	673	B-460.02	773	B-460.02	873		973	
074		174		274		374	B-460.03	474	B-460.02	574	B-460.03	674	B-460.02	774	B-460.02	874		974	
075		175		275		375	B-460.03	475	B-460.02	575	B-460.03	675	B-460.02	775	B-460.02	875		975	
076		176		276		376	B-460.03	476	B-460.02	576	B-460.03	676	B-460.02	776	B-460.02	876		976	
077		177		277		377	B-460.03	477	B-460.02	577	B-460.03	677	B-460.02	777	B-460.02	877		977	
078		178		278		378	B-460.03	478	B-460.02	578	B-460.03	678	B-460.02	778	B-460.02	878		978	
079		179		279		379	B-460.03	479	B-460.02	579	B-460.03	679	B-460.02	779	B-460.02	879		979	
080		180		280		380	B-460.03	480	B-460.02	580	B-460.03	680	B-460.02	780	B-460.02	880		980	
081	B-201.04	181		281		381	B-460.03	481	B-460.02	581	B-460.03	681	B-460.02	781	B-460.02	881		981	
082	B-201.04	182		282		382	B-460.03	482	B-460.02	582	B-460.03	682	B-460.02	782	B-460.02	882		982	
083	B-201.04	183		283		383	B-460.03	483	B-460.02	583	B-460.03	683	B-460.02	783	B-460.02	883		983	
084	B-201.04	184		284		384	B-460.03	484	B-460.02	584	B-460.03	684	B-460.02	784	B-460.02	884		984	
085	B-201.04	185		285		385	B-460.03	485	B-460.02	585	B-460.03	685	B-460.02	785	B-460.02	885		985	
086	B-201.04	186		286		386	B-460.03	486	B-460.02	586	B-460.03	686	B-460.02	786	B-460.02	886		986	
087	B-201.04	187		287		387	B-460.03	487	B-460.02	587	B-460.03	687	B-460.02	787	B-460.02	887		987	
088	B-201.04	188		288		388	B-460.03	488	B-460.02	588	B-460.03	688	B-460.02	788	B-460.02	888		988	
089	B-201.04	189		289		389	B-460.03	489	B-460.02	589	B-460.03	689	B-460.02	789	B-460.02	889		989	
090	B-201.04	190		290		390	B-460.03	490	B-460.02	590	B-460.03	690	B-460.02	790	B-460.02	890		990	
091		191		291		391	B-460.03	491	B-460.02	591	B-460.03	691	B-460.02	791	B-460.02	891		991	
092		192		292		392	B-460.03	492	B-460.02	592	B-460.03	692	B-460.02	792	B-460.02	892		992	
093		193		293		393	B-460.03	493	B-460.02	593	B-460.03	693	B-460.02	793	B-460.02	893		993	
094		194		294		394	B-460.03	494	B-460.02	594	B-460.03	694	B-460.02	794	B-460.02	894		994	
095		195		295		395	B-460.03	495	B-460.02	595	B-460.03	695	B-460.02	795	B-460.02	895		995	
096		196		296		396	B-460.03	496	B-460.02	596	B-460.03	696	B-460.02	796	B-460.02	896		996	
097		197		297		397	B-460.03	497	B-460.02	597	B-460.03	697	B-460.02	797	B-460.02	897		997	
098		198		298		398	B-460.03	498	B-460.02	598	B-460.03	698	B-460.02	798	B-460.02	898		998	
099		199		299		399	B-460.03	499	B-460.02	599	B-460.03	699	B-460.02	799	B-460.02	899		999	

FORD MOTOR COMPANY
STANDARD PARTS

INDEX

THE THREE NUMBERS AT THE TOP OF THE NO. COLUMN ARE THE FIRST DIGITS OF THE SIX DIGIT NUMBER AND FOLLOWING NUMBERS IN THE COLUMN ARE THE LAST THREE DIGITS OF THE SIX DIGIT NUMBER.

No.	Page	No.	Page	No.	Page	No.	Page	No.	Page	No.	Page	No.	Page	No.	Page	No.	Page	No.	Page
304		304		304		304		304		304		304		304		304		304	
000		100		200		300		400		500		600		700	B-201.05	800	B-201.05	900	B-201.06
001		101		201		301		401		501		601		701	B-201.05	801	B-201.05	901	B-201.06
002		102		202		302		402		502		602		702	B-201.05	802	B-201.06	902	B-201.06
003		103		203		303		403		503		603		703	B-201.05	803	B-201.06	903	B-201.05
004		104		204		304		404		504		604		704	B-201.05	804	B-201.06	904	B-201.05
005		105		205		305		405		505		605		705	B-201.05	805	B-201.06	905	B-201.05
006		106		206		306		406		506		606		706	B-201.05	806	B-201.06	906	B-201.05
007		107		207		307		407		507		607		707	B-201.05	807	B-201.06	907	B-201.06
008		108		208		308		408		508		608		708	B-201.05	808	B-201.06	908	B-201.06
009		109		209		309		409		509		609		709	B-201.06	809	B-201.06	909	B-201.06
010		110		210		310		410		510		610		710	B-201.06	810	B-201.06	910	B-201.06
011		111		211		311		411		511		611		711	B-201.06	811	B-201.05	911	B-201.06
012		112		212		312		412		512		612		712	B-201.06	812	B-201.05	912	B-201.06
013		113		213		313		413		513		613		713	B-201.06	813	B-201.05	913	B-201.06
014		114		214		314		414		514		614		714	B-201.06	814	B-201.05	914	B-201.06
015		115		215		315		415		515		615		715	B-201.06	815	B-201.05	915	B-201.06
016		116		216		316		416		516		616		716	B-201.06	816	B-201.05	916	
017		117		217		317		417		517		617		717	B-201.06	817	B-201.05	917	
018		118		218		318		418		518		618		718	B-201.05	818	B-201.05	918	B-201.05
019		119		219		319		419		519		619		719	B-201.05	819	B-201.06	919	B-201.05
020		120		220		320		420		520		620	B-201.05	720	B-201.05	820	B-201.06	920	
021		121		221		321		421		521		621	B-201.05	721	B-201.05	821	B-201.06	921	B-201.06
022		122		222		322		422		522		622	B-201.05	722	B-201.05	822	B-201.06	922	B-201.06
023		123		223		323		423		523		623	B-201.05	723	B-201.05	823	B-201.06	923	B-201.06
024		124		224		324		424		524		624	B-201.05	724	B-201.05	824	B-201.06	924	B-201.06
025		125		225		325		425		525		625	B-201.05	725	B-201.05	825	B-201.06	925	B-201.06
026		126		226		326		426		526		626	B-201.05	726	B-201.05	826	B-201.06	926	B-201.06
027		127		227		327		427		527		627	B-201.05	727	B-201.05	827	B-201.06	927	B-201.06
028		128		228		328		428		528		628	B-201.05	728	B-201.06	828	B-201.05	928	B-201.06
029		129		229		329		429		529		629	B-201.05	729	B-201.06	829	B-201.05	929	B-201.05
030		130		230		330		430		530		630	B-201.05	730	B-201.06	830	B-201.05	930	B-201.05
031		131		231		331		431		531		631	B-201.05	731	B-201.06	831	B-201.05	931	B-201.06
032		132		232		332		432		532		632	B-201.05	732	B-201.06	832	B-201.05	932	B-201.06
033		133		233		333		433		533		633	B-201.05	733	B-201.06	833	B-201.05	933	B-201.06
034		134		234		334		434		534		634	B-201.05	734	B-201.06	834	B-201.05	934	B-201.06
035		135		235		335		435		535		635	B-201.05	735	B-201.06	835	B-201.05	935	B-201.06
036		136		236		336		436		536		636	B-201.05	736	B-201.06	836	B-201.06	936	B-201.06
037		137		237		337		437		537		637	B-201.05	737	B-201.05	837	B-201.06	937	B-201.06
038		138		238		338		438		538		638	B-201.05	738	B-201.05	838	B-201.06	938	B-201.06
039		139		239		339		439		539		639	B-201.05	739	B-201.05	839	B-201.06	939	B-201.06
040		140		240		340		440		540		640	B-201.05	740	B-201.05	840	B-201.06	940	B-201.05
041		141		241		341		441		541		641	B-201.05	741	B-201.05	841	B-201.06	941	B-201.05
042		142		242		342		442		542		642	B-201.06	742	B-201.05	842	B-201.06	942	B-201.06
043		143		243		343		443		543		643	B-201.06	743	B-201.05	843	B-201.06	943	B-201.06
044		144		244		344		444		544		644	B-201.06	744	B-201.05	844	B-201.06	944	B-201.06
045		145		245		345		445		545		645	B-201.06	745	B-201.05	845	B-201.05	945	B-201.06
046		146		246		346		446		546		646	B-201.05	746	B-201.05	846	B-201.05	946	B-201.06
047		147		247		347		447		547		647	B-201.05	747	B-201.06	847	B-201.05	947	B-201.06
048		148		248		348		448		548		648	B-201.05	748	B-201.06	848	B-201.05	948	B-201.06
049		149		249		349		449		549		649	B-201.05	749	B-201.06	849	B-201.05	949	B-201.06
050		150		250		350		450		550		650	B-201.05	750	B-201.06	850	B-201.05	950	B-201.06
051		151		251		351		451		551		651	B-201.05	751	B-201.06	851	B-201.06	951	B-201.05
052		152		252		352		452		552		652	B-201.05	752	B-201.06	852	B-201.06	952	B-201.05
053		153		253		353		453		553		653	B-201.05	753	B-201.06	853	B-201.06	953	B-201.06
054		154		254		354		454		554		654	B-201.05	754	B-201.06	854	B-201.06	954	B-201.06
055		155		255		355		455		555		655	B-201.05	755	B-201.06	855	B-201.06	955	B-201.06
056		156		256		356		456		556		656	B-201.06	756	B-201.05	856	B-201.06	956	B-201.06
057		157		257		357		457		557		657	B-201.06	757	B-201.05	857	B-201.06	957	B-201.06
058		158		258		358		458		558		658	B-201.06	758	B-201.05	858	B-201.06	958	B-201.06
059		159		259		359		459		559		659	B-201.06	759	B-201.05	859	B-201.06	959	B-201.06
060		160		260		360		460		560		660	B-201.06	760	B-201.05	860	B-201.05	960	B-201.06
061		161		261		361		461		561		661	B-201.06	761	B-201.05	861	B-201.05	961	B-201.06
062		162		262		362		462		562		662	B-201.05	762	B-201.05	862	B-201.05	962	B-201.06
063		163		263		363		463		563		663	B-201.05	763	B-201.05	863	B-201.05	963	B-201.06
064		164		264		364		464		564		664	B-201.05	764	B-201.05	864	B-201.05	964	B-201.06
065		165		265		365		465		565		665	B-201.05	765	B-201.05	865	B-201.05	965	B-201.06
066		166		266		366		466		566		666	B-201.05	766	B-201.06	866	B-201.06	966	B-201.06
067		167		267		367		467		567		667	B-201.05	767	B-201.06	867	B-201.06	967	B-201.06
068		168		268		368		468		568		668	B-201.05	768	B-201.06	868	B-201.06	968	B-201.06
069		169		269		369		469		569		669	B-201.05	769	B-201.06	879	B-201.06	969	B-201.06
070		170		270		370		470		570		670	B-201.05	770	B-201.06	870	B-201.06	970	B-201.06
071		171		271		371		471		571		671	B-201.05	771	B-201.06	871	B-201.06	971	B-201.06
072		172		272		372		472		572		672	B-201.06	772	B-201.06	872	B-201.06	972	B-201.06
073		173		273		373		473		573		673	B-201.06	773	B-201.06	873	B-201.06	973	B-201.06
074		174		274		374		474		574		674	B-201.06	774	B-201.06	874	B-201.06	974	B-201.06
075		175		275		375		475		575		675	B-201.06	775	B-201.05	875	B-201.05	975	B-201.06
076		176		276		376		476		576		676	B-201.06	776	B-201.05	876	B-201.05	976	
077		177		277		377		477		577		677	B-201.06	777	B-201.05	877	B-201.05	977	
078		178		278		378		478		578		678	B-201.06	778	B-201.05	878	B-201.05	978	
079		179		279		379		479		579		679	B-201.06	779	B-201.05	879	B-201.05	979	
080		180		280		380		480		580		680	B-201.05	780	B-201.05	880	B-201.05	980	
081		181		281		381		481		581		681	B-201.05	781	B-201.05	881	B-201.06	981	
082		182		282		382		482		582		682	B-201.05	782	B-201.05	882	B-201.06	982	
083		183		283		383		483		583		683	B-201.05	783	B-201.05	883	B-201.06	983	
084		184		284		384		484		584		684	B-201.05	784	B-201.05	884	B-201.06	984	
085		185		285		385		485		585		685	B-201.05	785	B-201.06	885	B-201.06	985	
086		186		286		386		486		586		686	B-201.05	786	B-201.06	886	B-201.06	986	
087		187		287		387		487		587		687	B-201.05	787	B-201.06	887	B-201.06	987	
088		188		288		388		488		588		688	B-201.05	788	B-201.06	888	B-201.06	988	
089		189		289		389		489		589		689	B-201.05	789	B-201.06	889	B-201.06	989	
090		190		290		390		490		590		690	B-201.06	790	B-201.06	890	B-201.05	990	B-201.02
091		191		291		391		491		591		691	B-201.06	791	B-201.06	891	B-201.05	991	B-201.02
092		192		292		392		492		592		692	B-201.06	792	B-201.06	892	B-201.05	992	B-201.02
093		193		293		393		493		593		693	B-201.06	793	B-201.06	893	B-201.05	993	B-201.02
094		194		294		394		494		594		694	B-201.06	794	B-201.05	894	B-201.06	994	B-201.02
095		195		295		395		495		595		695	B-201.06	795	B-201.05	895	B-201.06	995	B-201.02
096		196		296		396		496		596		696	B-201.06	796	B-201.05	896	B-201.06	996	B-201.02
097		197		297		397		497		597		697	B-201.06	797	B-201.05	897	B-201.06	997	B-201.02
098		198		298		398		498		598		698	B-201.06	798	B-201.05	898	B-201.06	998	B-201.02
099		199		299		399		499		599		699	B-201.06	799	B-201.05	899	B-201.06	999	B-201.02

FORD MOTOR COMPANY
STANDARD PARTS

INDEX

THE THREE NUMBERS AT THE TOP OF THE NO. COLUMN ARE THE FIRST DIGITS OF THE SIX DIGIT NUMBER AND FOLLOWING NUMBERS IN THE COLUMN ARE THE LAST THREE DIGITS OF THE SIX DIGIT NUMBER.

No.	Page	No.	Page	No.	Page	No.	Page	No.	Page	No.	Page	No.	Page	No.	Page	No.	Page	No.	Page
305		305		305		305		305		305		305		305		305		305	
000	B-201.02	100		200		300		400		500		600		700		800		900	
001	B-201.02	101		201		301		401		501		601		701		801		901	
002	B-201.02	102		202		302		402		502		602		702		802		902	
003	B-201.02	103		203		303		403		503		603		703		803		903	
004	B-201.02	104		204		304		404		504		604		704		804		904	
005	B-201.02	105		205		305		405		505		605		705		805		905	
006	B-201.02	106		206		306		406		506		606		706		806		906	
007	B-201.02	107		207		307		407		507		607		707		807		907	
008		108		208		308		408		508		608		708		808		908	
009		109		209		309		409		509		609		709		809		909	
010		110		210		310		410		510		610		710		810		910	
011		111		211		311		411		511		611		711		811		911	
012		112		212		312		412		512		612		712		812		912	
013		113		213		313		413		513		613		713		813		913	
014		114		214		314		414		514		614		714		814		914	
015		115		215		315		415		515		615		715		815		915	
016		116		216		316		416		516		616		716		816		916	
017		117		217		317		417		517		617		717		817		917	
018		118		218		318		418		518		618		718		818		918	
019		119		219		319		419		519		619		719		819		919	
020		120		220		320		420		520		620		720		820		920	
021		121		221		321		421		521		621		721		821		921	
022		122		222		322		422		522		622		722		822		922	
023		123		223		323		423		523		623		723		823		923	
024		124		224		324		424		524		624		724		824		924	
025		125		225		325		425		525		625		725		825		925	
026		126		226		326		426		526		626		726		826		926	
027		127		227		327		427		527		627		727		827		927	
028		128		228		328		428		528		628		728		828		928	
029		129		229		329		429		529		629		729		829		929	
030		130		230		330		430		530		630		730		830		930	
031		131		231		331		431		531		631		731		831		931	
032		132		232		332		432		532		632		732		832		932	
033		133		233		333		433		533		633		733		833		933	
034		134		234		334		434		534		634		734		834		934	
035		135		235		335		435		535		635		735		835		935	
036		136		236		336		436		536		636		736		836		936	
037		137		237		337		437		537		637		737		837		937	
038		138		238		338		438		538		638		738		838		938	
039		139		239		339		439		539		639		739		839		939	
040		140		240		340		440		540		640		740		840		940	
041		141		241		341		441		541		641		741		841		941	
042		142		242		342		442		542		642		742		842		942	
043		143		243		343		443		543		643		743		843		943	
044		144		244		344		444		544		644		744		844		944	
045		145		245		345		445		545		645		745		845		945	
046		146		246		346		446		546		646		746		846		946	
047		147		247		347		447		547		647		747		847		947	
048		148		248		348		448		548		648		748		848		948	
049		149		249		349		449		549		649		749		849		949	
050		150		250		350		450		550		650		750		850		950	
051		151		251		351		451		551		651		751		851		951	
052		152		252		352		452		552		652		752		852		952	
053		153		253		353		453		553		653		753		853		953	
054		154		254		354		454		554		654		754		854		954	
055		155		255		355		455		555		655		755		855		955	
056		156		256		356		456		556		656		756		856		956	
057		157		257		357		457		557		657		757		857		957	
058		158		258		358		458		558		658		758		858		958	
059		159		259		359		459		559		659		759		859		959	
060		160		260		360		460		560		660		760		860		960	
061		161		261		361		461		561		661		761		861		961	
062		162		262		362		462		562		662		762		862		962	
063		163		263		363		463		563		663		763		863		963	
064		164		264		364		464		564		664		764		864		964	
065		165		265		365		465		565		665		765		865		965	
066		166		266		366		466		566		666		766		866		966	
067		167		267		367		467		567		667		767		867		967	
068		168		268		368		468		568		668		768		868		968	
069		169		269		369		469		569		669		769		879		969	
070		170		270		370		470		570		670		770		870		970	
071		171		271		371		471		571		671		771		871		971	
072		172		272		372		472		572		672		772		872		972	
073		173		273		373		473		573		673		773		873		973	
074		174		274		374		474		574		674		774		874		974	
075		175		275		375		475		575		675		775		875		975	
076		176		276		376		476		576		676		776		876		976	
077		177		277		377		477		577		677		777		877		977	
078		178		278		378		478		578		678		778		878		978	
079		179		279		379		479		579		679		779		879		979	
080		180		280		380		480		580		680		780		880		980	
081		181		281		381		481		581		681		781		881		981	
082		182		282		382		482		582		682		782		882		982	
083		183		283		383		483		583		683		783		883		983	
084		184		284		384		484		584		684		784		884		984	
085		185		285		385		485		585		685		785		885		985	
086		186		286		386		486		586		686		786		886		986	
087		187		287		387		487		587		687		787		887		987	
088		188		288		388		488		588		688		788		888		988	
089		189		289		389		489		589		689		789		889		989	
090		190		290		390		490		590		690		790		890		990	
091		191		291		391		491		591		691		791		891		991	
092		192		292		392		492		592		692		792		892		992	
093		193		293		393		493		593		693		793		893		993	
094		194		294		394		494		594		694		794		894		994	
095		195		295		395		495		595		695		795		895		995	
096		196		296		396		496		596		696		796		896		996	
097		197		297		397		497		597		697		797		897		997	
098		198		298		398		498		598		698		798		898		998	
099		199		299		399		499		599		699		799		899		999	

FORD MOTOR COMPANY
STANDARD PARTS

SECTION B
BOLTS

FORD MOTOR COMPANY
STANDARD PARTS

HEXAGON BOLTS — CLASS 2A

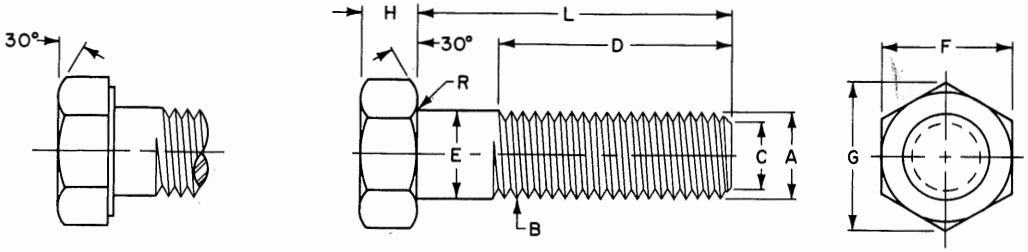

	Diameter Nominal	1/4		5/16		3/8		7/16		1/2	
E	Diameter Actual	.2500-.2450		.3125-.3065		.3750-.3690		.4375-.4305		.5000-.4930	
F	Head Width	.4375-.428		.5000-.489		.5625-.551		.6250-.612		.7500-.736	
G	Across Corner	.505 -.488		.577 -.557		.650 -.628		.722 -.698		.866 -.840	
H	Head Thickness	.163 -.150		.211 -.195		.243 -.226		.291 -.272		.323 -.302	
R	Radius of Fillet	.023 -.009		.023 -.009		.023 -.009		.023 -.009		.023 -.009	
B	Threads per Inch	20	28	18	24	16	24	14	20	13	20
	Pitch Diameter Plain	.2164 .2127	.2258 .2225	.2752 .2712	.2843 .2806	.3331 .3287	.3468 .3430	.3897 .3850	.4037 .3995	.4485 .4435	.4562 .4619
	Pitch Diameter When Plated - Max.	.2175	.2268	.2764	.2854	.3344	.3479	.3911	.4050	.4500	.4675
C	Minor Dia. Max.	.1876	.2052	.2431	.2603	.2970	.3228	.3485	.3749	.4041	.4374
A	Major Dia. Thread	.2489 .2408	.2490 .2425	.3113 .3026	.3114 .3042	.3737 .3643	.3739 .3667	.4361 .4258	.4362 .4281	.4985 .4876	.4987 .4906
D	Min. Thread Length	.7500		.875		1.000		1.125		1.250	

L LENGTH — FORD PART NUMBERS

L	1/4		5/16		3/8		7/16		1/2	
3/8, 1/2, 5/8, 3/4	20300-S 20308-S 20324-S 20344-S	20301-S 20309-S 20325-S 20345-S	20302-S 20310-S 20326-S 20346-S	20303-S 20311-S 20327-S 20347-S	20312-S 20328-S 20348-S	20313-S 20329-S 20349-S	20314-S 20330-S 20350-S	20315-S 20331-S 20351-S	20332-S 20352-S	20333-S 20353-S
7/8, 1, 1 1/8, 1 1/4	20364-S 20384-S 20404-S 20424-S	20365-S 20385-S 20405-S 20425-S	20366-S 20386-S 20406-S 20426-S	20367-S 20387-S 20407-S 20427-S	20368-S 20388-S 20408-S 20428-S	20369-S 20389-S 20409-S 20429-S	20370-S 20390-S 20410-S 20430-S	20371-S 20391-S 20411-S 20431-S	20372-S 20392-S 20412-S 20432-S	20373-S 20393-S 20413-S 20433-S
1 3/8, 1 1/2, 1 5/8, 1 3/4	20444-S 20464-S 20484-S 45500-S	20445-S 20465-S 20485-S 45501-S	20446-S 20466-S 20486-S 20504-S	20447-S 20467-S 20487-S 20505-S	20448-S 20468-S 20488-S 20506-S	20449-S 20469-S 20489-S 20507-S	20450-S 20470-S 20490-S 20508-S	20451-S 20471-S 20491-S 20509-S	20452-S 20472-S 20492-S 20510-S	20453-S 20473-S 20493-S 20511-S
1 7/8, 2, 2 1/8, 2 1/4	45502-S 45504-S 45506-S 45510-S	45503-S 45505-S 45507-S 45511-S	20512-S 20520-S 45508-S 45512-S	20513-S 20521-S 45509-S 45513-S	20514-S 20522-S 20528-S 20534-S	20515-S 20523-S 20529-S 20535-S	20516-S 20524-S 20530-S 20536-S	20517-S 20525-S 20531-S 20537-S	20518-S 20526-S 20532-S 20538-S	20519-S 20527-S 20533-S 20539-S
2 3/8, 2 1/2, 2 3/4, 3	45514-S 45518-S 45524-S 45530-S	45515-S 45519-S 45525-S 45531-S	45516-S 45520-S 45526-S 45532-S	45517-S 45521-S 45527-S 45533-S	20540-S 45522-S 45528-S 45534-S	20541-S 45523-S 45529-S 45535-S	20542-S 20546-S 20550-S 20554-S	20543-S 20547-S 20551-S 20555-S	20544-S 20548-S 20552-S 20556-S	20545-S 20549-S 20553-S 20557-S
3 1/4, 3 1/2, 3 3/4, 4	45536-S 45544-S 45552-S 45560-S	45537-S 45545-S 45553-S 45561-S	45538-S 45546-S 45554-S 45562-S	45539-S 45547-S 45555-S 45563-S	45540-S 45548-S 45556-S 45564-S	45541-S 45549-S 45557-S 45565-S	45542-S 45550-S 45558-S 45566-S	45543-S 45551-S 45559-S 45567-S	20558-S 20560-S 20562-S 45568-S	20559-S 20561-S 20563-S 45569-S

NOTES: For General Specifications See Page B-950.01. For Finishes See Addendum.
MATERIAL: M-3500-B Steel.
1/64" washer face under head and 1/16" relief between body diameter and threads are optional.
Point should be flat and chamfered from approximately 1/64" below the minor diameter, the length of point to be from 1/2 to 1-1/2 threads.

FORD MOTOR COMPANY
STANDARD PARTS

HEXAGON BOLTS — CLASS 2A

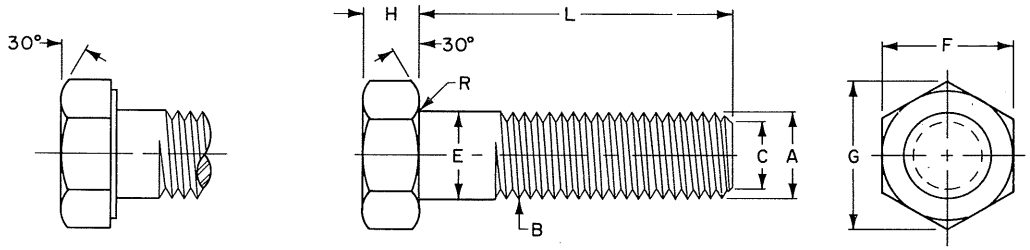

	Diameter Nominal	1/4		5/16		3/8		7/16		1/2	
E	Diameter Actual	.2500-.2450		.3125-.3065		.3750-.3690		.4375-.4305		.5000-.4930	
F	Head Width	.4375-.428		.5000-.489		.5625-.551		.6250-.612		.7500-.736	
G	Across Corner	.505 -.488		.577 -.557		.650 -.628		.722 -.698		.866 -.840	
H	Head Thickness	.163 -.150		.211 -.195		.243 -.226		.291 -.272		.323 -.302	
R	Radius of Fillet	.023 -.009		.023 -.009		.023 -.009		.023 -.009		.023 -.009	
B	Threads per inch	20	28	18	24	16	24	14	20	13	20
	Pitch Diameter Plain	.2164 .2127	.2258 .2225	.2752 .2712	.2843 .2806	.3331 .3287	.3468 .3430	.3897 .3850	.4037 .3995	.4485 .4435	.4662 .4619
	Pitch Diameter When Plated - Max.	.2175	.2268	.2764	.2854	.3344	.3479	.3911	.4050	.4500	.4675
C	Minor Dia. Max.	.1876	.2052	.2431	.2603	.2970	.3228	.3485	.3749	.4041	.4374
A	Major Dia. Thread	.2489 .2408	.2490 .2425	.3113 .3026	.3114 .3042	.3737 .3643	.3739 .3667	.4361 .4258	.4362 .4281	.4985 .4876	.4987 .4906

L LENGTH	FORD PART NUMBERS									
4¼ 4½ 4¾ 5	45570-S 45580-S 45590-S 45600-S	45571-S 45581-S 45591-S 45601-S	45572-S 45582-S 45592-S 45602-S	45573-S 45583-S 45593-S 45603-S	45574-S 45584-S 45594-S 45604-S	45575-S 45585-S 45595-S 45605-S	45576-S 45586-S 45596-S 45606-S	45577-S 45587-S 45597-S 45607-S	45578-S 45588-S 45598-S 45608-S	45579-S 45589-S 45599-S 45609-S
5¼ 5½ 5¾ 6	45610-S 45620-S 45630-S 45640-S	45611-S 45621-S 45631-S 45641-S	45612-S 45622-S 45632-S 45642-S	45613-S 45623-S 45633-S 45643-S	45614-S 45624-S 45634-S 45644-S	45615-S 45625-S 45635-S 45645-S	45616-S 45626-S 45636-S 45646-S	45617-S 45627-S 45637-S 45647-S	45618-S 45628-S 45638-S 45648-S	45619-S 45629-S 45639-S 45649-S
6½ 7 7½ 8	304990-S 304996-S 305002-S	304991-S 304997-S 305003-S	304992-S 304998-S 305004-S	304993-S 304999-S 305005-S	304994-S 305000-S 305006-S	304995-S 305001-S 305007-S	302745-S 302746-S 302747-S	302769-S 302770-S 302771-S	302793-S 302794-S 302795-S 302796-S	302825-S 302826-S 302827-S 302828-S
8½ 9 9½ 10									302797-S 302798-S 302799-S 302800-S	302829-S 302830-S 302831-S 302832-S
10½ 11 11½									302801-S	302833-S

NOTES: For General Specifications See Page B-950.01. For Finishes See Addendum.
MATERIAL: M-3500-B Steel.
1/64" washer face under head and 1/16" relief between body diameter and threads are optional.
Point should be flat and chamfered from approximately 1/64" below the minor diameter, the length of point to be from 1/2 to 1-1/2 threads.

FORD MOTOR COMPANY
STANDARD PARTS

HEXAGON BOLTS — **CLASS 2A**

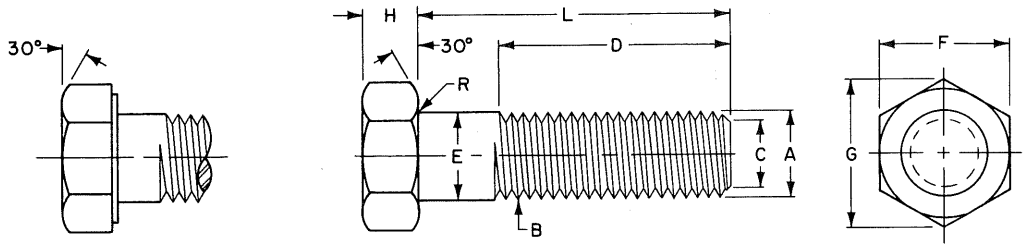

	Diameter Nominal	9/16		5/8		3/4		7/8		1	
E	Diameter Actual	.5625-.5545		.6250-.6170		.7500-.7410		.8750-.8660		1.0000-.9900	
F	Head Width	.8125-.798		.9375-.922		1.1250-1.100		1.3125-1.285		1.5000-1.469	
G	Across Corner	.938 -.910		1.083 -1.051		1.299 -1.254		1.516 -1.465		1.732 -1.675	
H	Head Thickness	.371 -.348		.403 -.378		.483 -.455		.563 -.531		.627 -.591	
R	Radius of Fillet	.041 -.021		.041 -.021		.041 -.021		.062 -.041		.093 -.062	
B	Threads per Inch	12	18	11	18	10	16	9	14	8	12
	Pitch Diameter Plain	.5068 .5016	.5250 .5205	.5644 .5589	.5875 .5828	.6832 .6773	.7079 .7029	.8009 .7946	.8270 .8216	.9168 .9100	.9441 .9382
	Pitch Diameter Plated - Max.	.5084	.5264	.5660	.5889	.6850	.7094	.8028	.8286	.9188	.9459
C	Minor Dia. Max.	.4587	.4929	.5119	.5554	.6255	.6718	.7368	.7858	.8446	.8960
A	Major Dia. Thread	.5609 .5495	.5611 .5524	.6234 .6113	.6236 .6149	.7482 .7353	.7485 .7391	.8731 .8592	.8734 .8631	.9980 .9830	.9982 .9868
D	Min. Thread Length	1.375		1.500		1.750		2.000		2.250	

L LENGTH — FORD PART NUMBERS

5/8 3/4	20900-S 20908-S	20901-S 20909-S	45700-S 45702-S	45701-S 45703-S	45704-S	45705-S				
7/8 1 1 1/8 1 1/4	20920-S 20936-S 20954-S 20972-S	20921-S 20937-S 20955-S 20973-S	45706-S 45712-S 45719-S 45726-S	45707-S 45713-S 45720-S 45727-S	45708-S 45714-S 45721-S 45728-S	45709-S 45715-S 45722-S 45729-S	45710-S 45716-S 45723-S 45730-S	45711-S 45717-S 45724-S 45731-S	45718-S 45725-S 45732-S	
1 3/8 1 1/2 1 5/8 1 3/4	20990-S 21008-S 21026-S 21044-S	20991-S 21009-S 21027-S 21045-S	45733-S 45740-S 45747-S 45754-S	45734-S 45741-S 45748-S 45755-S	45735-S 45742-S 45749-S 45756-S	45736-S 45743-S 45750-S 45757-S	45737-S 45744-S 45751-S 45758-S	45738-S 45745-S 45752-S 45759-S	45739-S 45746-S 45753-S 45760-S	
1 7/8 2 2 1/8 2 1/4	21053-S 21062-S 21071-S 21080-S	21054-S 21063-S 21072-S 21081-S	45761-S 45768-S 45775-S 45782-S	45762-S 45769-S 45776-S 45783-S	45763-S 45770-S 45777-S 45784-S	45764-S 45771-S 45778-S 45785-S	45765-S 45772-S 45779-S 45786-S	45766-S 45773-S 45780-S 45787-S	45767-S 45774-S 45781-S 45788-S	
2 3/8 2 1/2 2 3/4 3	21089-S 21098-S 21107-S 21116-S	21090-S 21099-S 21108-S 21117-S	45789-S 45796-S 45803-S 45810-S	45790-S 45797-S 45804-S 45811-S	45791-S 45798-S 45805-S 45812-S	45792-S 45799-S 45806-S 45813-S	45793-S 45800-S 45807-S 45814-S	45794-S 45801-S 45808-S 45815-S	45795-S 45802-S 45809-S 45816-S	
3 1/4 3 1/2 3 3/4 4	21125-S 21134-S 21143-S 45838-S	21126-S 21135-S 21144-S 45839-S	45817-S 45824-S 45831-S 45840-S	45818-S 45825-S 45832-S 45841-S	45819-S 45826-S 45833-S 45842-S	45820-S 45827-S 45834-S 45843-S	45821-S 45828-S 45835-S 45844-S	45822-S 45829-S 45836-S 45845-S	45823-S 45830-S 45837-S 45846-S	

NOTES: For General Specifications See Page B-950.01. For Finishes See Addendum.
MATERIAL: M-3500-B Steel.
1/64" washer face under head and 1/16" relief between body diameter and threads are optional.
Point should be flat and chamfered from approximately 1/64" below the minor diameter, the length of point to be from 1/2 to 1-1/2 threads.

FORD MOTOR COMPANY
STANDARD PARTS

HEXAGON BOLTS — CLASS 2A

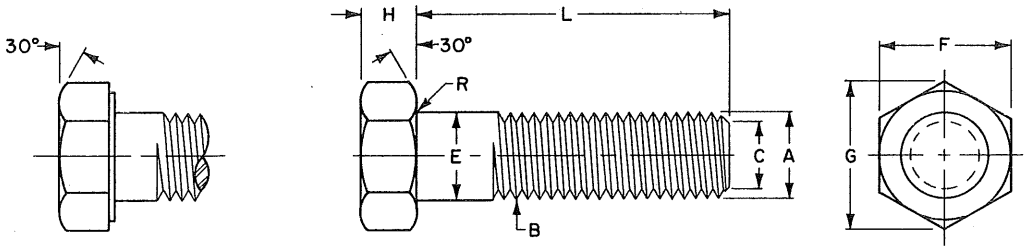

	Diameter Nominal	9/16		5/8		3/4		7/8		1	
E	Diameter Actual	.5625-.5545		.6250-.6170		.7500-.7410		.8750-.8660		1.0000-.9900	
F	Head Width	.8125-.798		.9375-.922		1.1250-1.100		1.3125-1.285		1.5000-1.469	
G	Across Corner	.938 -.910		1.083 -1.051		1.299 -1.254		1.516 -1.465		1.732 -1.675	
H	Head Thickness	.371 -.348		.403 -.378		.483 -.455		.563 -.531		.627 -.591	
R	Radius of Fillet	.041 -.021		.041 -.021		.041 -.021		.062 -.041		.093 -.062	
B	Threads per Inch	12	18	11	18	10	16	9	14	8	12
	Pitch Diameter Plain	.5068 .5016	.5250 .5205	.5644 .5589	.5875 .5828	.6832 .6773	.7079 .7029	.8009 .7946	.8270 .8216	.9168 .9100	.9441 .9382
	Pitch Diameter When Plated - Max.	.5084	.5264	.5660	.5889	.6850	.7094	.8028	.8286	.9188	.9459
C	Minor Dia. Max.	.4587	.4929	.5119	.5554	.6255	.6718	.7368	.7858	.8446	.8960
A	Major Dia. Thread	.5609 .5495	.5611 .5524	.6234 .6113	.6236 .6149	.7482 .7353	.7485 .7391	.8731 .8592	.8734 .8631	.9980 .9830	.9982 .9868

L LENGTH	FORD PART NUMBERS									
4¼ 4½ 4¾ 5	45847-S 45856-S 45865-S 45874-S	45848-S 45857-S 45866-S 45875-S	45849-S 45858-S 45867-S 45876-S	45850-S 45859-S 45868-S 45877-S	45851-S 45860-S 45869-S 45878-S	45852-S 45861-S 45870-S 45879-S	45853-S 45862-S 45871-S 45880-S	45854-S 45863-S 45872-S 45881-S	45855-S 45864-S 45873-S 45882-S	
5¼ 5½ 5¾ 6	45883-S 45892-S 45901-S 45910-S	45884-S 45893-S 45902-S 45911-S	45885-S 45894-S 45903-S 45912-S	45886-S 45895-S 45904-S 45913-S	45887-S 45896-S 45905-S 45914-S	45888-S 45897-S 45906-S 45915-S	45889-S 45898-S 45907-S 45916-S	45890-S 45899-S 45908-S 45917-S	45891-S 45900-S 45909-S 45918-S	
6½ 7 7½ 8	302857-S 302858-S 302859-S 302860-S	302889-S 302890-S 302891-S 302892-S	302921-S 302922-S 302923-S 302924-S	302953-S 302954-S 302955-S 302956-S	302985-S 302986-S 302987-S 302988-S	303017-S 303018-S 303019-S 303020-S	303049-S 303050-S 303051-S 303052-S	303081-S 303082-S 303083-S 303084-S	303112-S 303113-S 303114-S 303115-S	303144-S 303145-S 303146-S 303147-S
8½ 9 9½ 10	302861-S 302862-S 302863-S 302864-S	302893-S 302894-S 302895-S 302896-S	302925-S 302926-S 302927-S 302928-S	302957-S 302958-S 302959-S 302960-S	302989-S 302990-S 302991-S 302992-S	303021-S 303022-S 303023-S 303024-S	303053-S 303054-S 303055-S 303056-S	303085-S 303086-S 303087-S 303088-S	303116-S 303117-S 303118-S 303119-S	303148-S 303149-S 303150-S 303151-S
10½ 11 11½	302865-S 302866-S 302867-S	302897-S 302898-S 302899-S	302929-S 302930-S 302931-S	302961-S 302962-S 302963-S	302993-S 302994-S 302995-S	303025-S 303026-S 303027-S	303057-S 303058-S 303059-S	303089-S 302802-S 303090-S	303120-S 303121-S 303122-S	303152-S 303153-S 303154-S

NOTES: For General Specifications See Page B-950.01. For Finishes See Addendum.
MATERIAL: M-3500-B Steel.
1/64" washer face under head and 1/16" relief between body diameter and threads are optional.
Point should be flat and chamfered from approximately 1/64" below the minor diameter, the length of point to be from 1/2 to 1-1/2 threads.

FORD MOTOR COMPANY
STANDARD PARTS

HEXAGON BOLTS — **CLASS 2A**

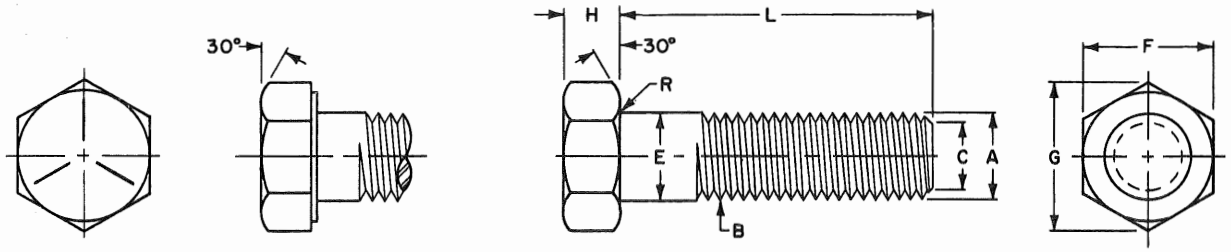

HEAD MARKING
3 RADIAL LINES 120° APART

	Diameter Nominal	1/4		5/16		3/8		7/16		1/2	
E	Diameter Actual	.2500-.2450		.3125-.3065		.3750-.3690		.4375-.4305		.5000-.4930	
F	Head Width	.4375-.428		.5000-.489		.5625-.551		.6250-.612		.7500-.736	
G	Across Corner	.505 -.488		.577 -.557		.650 -.628		.722 -.698		.866 -.840	
H	Head Thickness	.163 -.150		.211 -.195		.243 -.226		.291 -.272		.323 -.302	
R	Radius of Fillet	.023 -.009		.023 -.009		.023 -.009		.023 -.009		.023 -.009	
B	Threads per Inch	20	28	18	24	16	24	14	20	13	20
	Pitch Diameter Plain	.2164 .2127	.2258 .2225	.2752 .2712	.2843 .2806	.3331 .3287	.3468 .3430	.3897 .3850	.4037 .3995	.4485 .4435	.4662 .4619
	Pitch Diameter When Plated - Max.	.2175	.2268	.2764	.2854	.3344	.3479	.3911	.4050	.4500	.4675
C	Minor Dia. Max.	.1876	.2052	.2431	.2603	.2970	.3228	.3485	.3749	.4041	.4374
A	Major Dia. Thread	.2489 .2408	.2490 .2425	.3113 .3026	.3114 .3042	.3737 .3643	.3739 .3667	.4361 .4258	.4362 .4281	.4985 .4876	.4987 .4906

L LENGTH — FORD PART NUMBERS

3/8 1/2 5/8 3/4	304620-S 304624-S 304632-S 304646-S	304621-S 304625-S 304633-S 304647-S	304622-S 304626-S 304634-S 304648-S	304623-S 304627-S 304635-S 304649-S	304628-S 304636-S 304650-S	304629-S 304637-S 304651-S	304630-S 304638-S 304652-S	304631-S 304639-S 304653-S	304640-S 304654-S	304641-S 304655-S
7/8 1 1 1/8 1 1/4	304662-S 304680-S 304699-S 304718-S	304663-S 304681-S 304700-S 304719-S	304664-S 304682-S 304701-S 304720-S	304665-S 304683-S 304702-S 304721-S	304666-S 304684-S 304703-S 304722-S	304667-S 304685-S 304704-S 304723-S	304668-S 304686-S 304705-S 304724-S	304669-S 304687-S 304706-S 304725-S	304670-S 304688-S 304707-S 304726-S	304671-S 304689-S 304708-S 304727-S
1 3/8 1 1/2 1 5/8 1 3/4	304737-S 304756-S 304775-S 300858-S	304738-S 304757-S 304776-S 300859-S	304739-S 304758-S 304777-S 304794-S	304740-S 304759-S 304778-S 304795-S	304741-S 304760-S 304779-S 304796-S	304742-S 304761-S 304780-S 304797-S	304743-S 304762-S 304781-S 304798-S	304744-S 304763-S 304782-S 304799-S	304745-S 304764-S 304783-S 304800-S	304746-S 304765-S 304784-S 304801-S
1 7/8 2 2 1/8 2 1/4	300860-S 300862-S 300864-S 300868-S	300861-S 300863-S 300865-S 300869-S	304811-S 304828-S 300866-S 300870-S	304812-S 304829-S 300867-S 300871-S	304813-S 304830-S 304845-S 304860-S	304814-S 304831-S 304846-S 304861-S	304815-S 304832-S 304847-S 304862-S	304816-S 304833-S 304848-S 304863-S	304817-S 304834-S 304849-S 304864-S	304818-S 304835-S 304850-S 304865-S
2 3/8 2 1/2 2 3/4 3	300872-S 300876-S 300882-S 300888-S	300873-S 300877-S 300883-S 300889-S	300874-S 300878-S 300884-S 300890-S	300875-S 300879-S 300885-S 300891-S	304875-S 300880-S 300886-S 300892-S	304876-S 300881-S 300887-S 300893-S	304877-S 304890-S 304903-S 302549-S	304878-S 304891-S 304904-S 302550-S	304879-S 304892-S 304905-S 304918-S	304880-S 304893-S 304906-S 304919-S
3 1/4 3 1/2 3 3/4 4	300894-S 300900-S 300906-S 300912-S	300895-S 300901-S 300907-S 300913-S	300896-S 300902-S 300908-S 300914-S	300897-S 300903-S 300909-S 300915-S	300898-S 300904-S 300910-S 300916-S	300899-S 300905-S 300911-S 300917-S	302551-S 302553-S 302555-S 302557-S	302552-S 302554-S 302556-S 302558-S	304929-S 304940-S 304951-S 300918-S	304930-S 304941-S 304952-S 300919-S
4 1/4 4 1/2 4 3/4 5	300922-S 300932-S 300944-S 300956-S	300923-S 300933-S 300945-S 300957-S	300924-S 300934-S 300946-S 300958-S	300925-S 300935-S 300947-S 300959-S	300926-S 300936-S 300948-S 300960-S	300927-S 300937-S 300949-S 300961-S	302559-S 302561-S 302563-S 302565-S	302560-S 302562-S 302564-S 302566-S	300928-S 300938-S 300950-S 300962-S	300929-S 300939-S 300951-S 300963-S
5 1/4 5 1/2 5 3/4 6	300971-S 300986-S 301001-S 301373-S	300972-S 300987-S 301002-S 301301-S	300973-S 300988-S 301003-S 301302-S	300974-S 300989-S 301004-S 301303-S	300975-S 300990-S 301005-S 301304-S	300976-S 300991-S 301006-S 301305-S	302567-S 302569-S 302571-S 302573-S	302568-S 302570-S 302572-S 302574-S	300977-S 300992-S 301007-S 301022-S	300978-S 300993-S 301008-S 301023-S
6 1/2 7 7 1/2 8	301306-S 301312-S 301318-S	301307-S 301313-S 301319-S	301308-S 301314-S 301320-S	301309-S 301315-S 301321-S	301310-S 301316-S 301322-S	301311-S 301317-S 301323-S	302575-S 302577-S 302579-S 302581-S	302576-S 302578-S 302580-S 302582-S	301040-S 301058-S 301076-S 301324-S	301041-S 301059-S 301077-S 301325-S
8 1/2 9 9 1/2							302583-S 302585-S 302587-S	302584-S 302586-S 302588-S	301333-S 301342-S 301351-S	301334-S 301343-S 301352-S

NOTES: For General Specifications See Page B-950.01. For Finishes See Addendum.
MATERIAL: M-3500-E Steel.
1/64" washer face under head and 1/16" relief between body diameter and threads are optional.
Point should be flat and chamfered from approximately 1/64" below the minor diameter, the length of point to be from 1/2 to 1-1/2 threads.

FORD MOTOR COMPANY
STANDARD PARTS

HEXAGON BOLTS — CLASS 2A

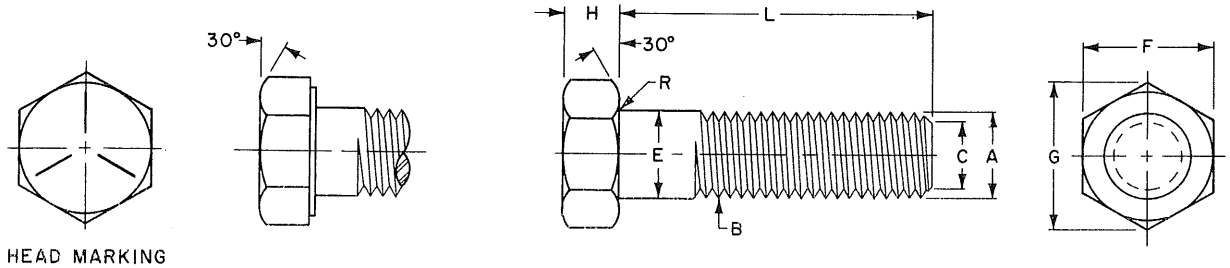

HEAD MARKING
3 RADIAL LINES 120° APART

	Diameter Nominal	9/16		5/8		3/4		7/8		1	
E	Diameter Actual	.5625-.5545		.6250-.6170		.7500-.7410		.8750-.8660		1.0000-.9900	
F	Head Width	.8125-.798		.9375-.922		1.1250-1.100		1.3125-1.285		1.5000-1.469	
G	Across Corner	.938 -.910		1.083 -.1.051		1.299 -1.254		1.516 -1.465		1.732 -1.675	
H	Head Thickness	.371 -.348		.403 -.378		.483 -.455		.563 -.531		.627 -.591	
R	Radius of Fillet	.041 -.021		.041 -.021		.041 -.021		.062 -.041		.093 -.062	
B	Threads per Inch	12	18	11	18	10	16	9	14	8	12
	Pitch Diameter Plain	.5068 .5016	.5250 .5205	.5644 .5589	.5875 .5828	.6832 .6773	.7079 .7029	.8009 .7946	.8270 .8216	.9168 .9100	.9441 .9382
	Pitch Diameter when Plated - Max.	.5084	.5264	.5660	.5889	.6850	.7094	.8028	.8286	.9188	.9459
C	Minor Dia. Max.	.4587	.4929	.5119	.5554	.6255	.6718	.7368	.7858	.8446	.8960
A	Major Dia. Thread	.5609 .5495	.5611 .5524	.6234 .6113	.6236 .6149	.7482 .7353	.7485 .7391	.8731 .8592	.8734 .8631	.9980 .9830	.9982 .9868

L. LENGTH — FORD PART NUMBERS

5/8 3/4	304642-S 304656-S	304643-S 304657-S	304644-S 304658-S	304645-S 304659-S	304660-S	304661-S					
7/8 1 1 1/8 1 1/4	304672-S 304690-S 304709-S 304728-S	304673-S 304691-S 304710-S 304729-S	304674-S 304692-S 304711-S 304730-S	304675-S 304693-S 304712-S 304731-S	304676-S 304694-S 304713-S 304732-S	304677-S 304695-S 304714-S 304733-S	304678-S 304696-S 304715-S 304734-S	304679-S 304697-S 304716-S 304735-S	304698-S 304717-S 304736-S		
1 3/8 1 1/2 1 5/8 1 3/4	304747-S 304766-S 304785-S 304802-S	304748-S 304767-S 304786-S 304803-S	304749-S 304768-S 304787-S 304804-S	304750-S 304769-S 304788-S 304805-S	304751-S 304770-S 304789-S 304806-S	304752-S 304771-S 304790-S 304807-S	304753-S 304772-S 304791-S 304808-S	304754-S 304773-S 304792-S 304809-S	304755-S 304774-S 304793-S 304810-S		
1 7/8 2 2 1/8 2 1/4	304819-S 304836-S 304851-S 304866-S	304820-S 304837-S 304852-S 304867-S	304821-S 304838-S 304853-S 304868-S	304822-S 304839-S 304854-S 304869-S	304823-S 304840-S 304855-S 304870-S	304824-S 304841-S 304856-S 304871-S	304825-S 304842-S 304857-S 304872-S	304826-S 304843-S 304858-S 304873-S	304827-S 304844-S 304859-S 304874-S		
2 3/8 2 1/2 2 3/4 3	304881-S 304894-S 304907-S 304920-S	304882-S 304895-S 304908-S 304921-S	304883-S 304896-S 304909-S 304922-S	304884-S 304897-S 304910-S 304923-S	304885-S 304898-S 304911-S 304924-S	304886-S 304899-S 304912-S 304925-S	304887-S 304900-S 304913-S 304926-S	304888-S 304901-S 304914-S 304927-S	304889-S 304902-S 304915-S 304928-S		
3 1/4 3 1/2 3 3/4 4	304931-S 304942-S 304953-S 300920-S	304932-S 304943-S 304954-S 300921-S	304933-S 304944-S 304955-S 304962-S	304934-S 304945-S 304956-S 304963-S	304935-S 304946-S 304957-S 304964-S	304936-S 304947-S 304958-S 304965-S	304937-S 304948-S 304959-S 304966-S	304938-S 304949-S 304960-S 304967-S	304939-S 304950-S 304961-S 304968-S		
4 1/4 4 1/2 4 3/4 5	300930-S 300940-S 300952-S 300964-S	300931-S 300941-S 300953-S 300965-S	304969-S 302589-S 302591-S 302593-S	304970-S 302590-S 302592-S 302594-S	304971-S 300942-S 300954-S 300966-S	304972-S 300943-S 300955-S 300967-S	304973-S 304976-S 304979-S 300968-S	304974-S 304977-S 304980-S 300969-S	304975-S 304978-S 304981-S 300970-S		
5 1/4 5 1/2 5 3/4 6	300979-S 300994-S 301009-S 301024-S	300980-S 300995-S 301010-S 301025-S	302595-S 302597-S 302599-S 302601-S	302596-S 302598-S 302600-S 302602-S	300981-S 300996-S 301011-S 301026-S	300982-S 300997-S 301012-S 301027-S	300983-S 300998-S 301013-S 301028-S	300984-S 300999-S 301014-S 301029-S	300985-S 301000-S 301015-S 301030-S		
6 1/2 7 7 1/2 8	301042-S 301060-S 301078-S 301326-S	301043-S 301061-S 301079-S 301327-S	302603-S 302605-S 302607-S 302609-S	302604-S 302606-S 302608-S 302610-S	301044-S 301062-S 301080-S 301328-S	301045-S 301063-S 301081-S 301329-S	301046-S 301064-S 301082-S 301330-S	301047-S 301065-S 301083-S 301331-S	301048-S 301066-S 301084-S 301332-S		
8 1/2 9 9 1/2	301335-S 301344-S 301353-S	301336-S 301345-S 301354-S	302611-S 302613-S 302615-S	302612-S 302614-S 302616-S	301337-S 301346-S 301355-S	301338-S 301347-S 301356-S	301339-S 301348-S 301357-S	301340-S 301349-S 301358-S	301341-S 301350-S 301359-S		

NOTES: For General Specifications See Page B-950.01. For Finishes See Addendum.
MATERIAL: M-3500-E Steel.
1/64" washer face under head and 1/16" relief between body diameter and threads are optional.
Point should be flat and chamfered from approximately 1/64" below the minor diameter, the length of point to be from 1/2 to 1-1/2 threads.

FORD MOTOR COMPANY
STANDARD PARTS

HEXAGON BOLTS

SELF LOCKING
CLASS 2A

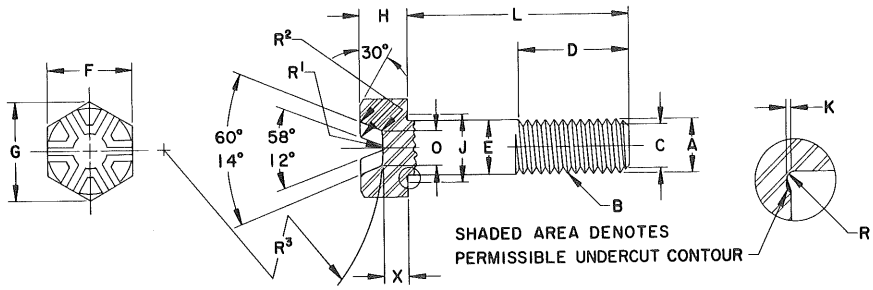

	Nominal Diameter	1/4		5/16		3/8		7/16		1/2		9/16		5/8	
E	Actual Diameter	.2500-.2450		.3125-.3065		.3750-.3690		.4375-.4305		.5000-.4930		.5625-.5545		.6250-.617	
F	Head Width	.4375-.428		.5000-.489		.5625-.551		.6250-.612		.7500-.736		.8125-.798		.8750-.860	
G	Across Corner	.505 -.488		.577 -.557		.650 -.628		.722 -.698		.866 -.840		.938 -.910		1.010 -.980	
H	Head Thickness	.135 -.125		.198 -.188		.260 -.250		.291 -.281		.327 -.312		.390 -.375		.390 -.375	
J	Undercut Diameter	.327 -.307		.406 -.386		.484 -.464		.546 -.526		.640 -.620		.703 -.683		.760 -.740	
K	Undercut Depth	.007 -.004		.013 -.010		.013 -.010		.013 -.010		.013 -.010		.013 -.010		.013 -.010	
O	Recess Diameter	.166 -.146		.208 -.188		.250 -.230		.288 -.268		.332 -.312		.374 -.354		.416 -.396	
R^1	Radius	.024 -.016		.024 -.016		.031 -.016		.031 -.016		.031 -.016		.031 -.016		.047 -.016	
R^2	Radius	.031 -.016		.031 -.016		.031 -.016		.031 -.016		.031 -.016		.031 -.016		.031 -.016	
R^3	Radius	2.00 -1.50		2.00 -1.50		2.00 -1.50		2.00 -1.50		2.00 -1.50		2.00 -1.50		3.50 -3.00	
X	Check Dimension	.110 -.090		.145 -.125		.185 -.165		.205 -.185		.220 -.200		.260 -.240		.290 -.270	
B	Threads per Inch	20	28	18	24	16	24	14	20	13	20	12	18	11	18
	Pitch Diameter Plain	.2164 .2127	.2258 .2225	.2752 .2712	.2843 .2806	.3331 .3287	.3468 .3430	.3897 .3850	.4037 .3995	.4485 .4435	.4662 .4619	5068 .5016	.5250 .5205	.5644 .5589	.5875 .5828
	Pitch Diameter When Plated - Max.	.2175	.2268	.2764	.2854	.3344	.3479	.3911	.4050	.4500	.4675	.5084	.5264	.5660	.5889
C	Minor Diameter - Max.	.1876	.2052	.2431	.2603	.2970	.3228	.3485	.3749	.4041	.4374	.4587	.4929	.5119	.5554
A	Major Diameter Thread	.2489 .2408	.2490 .2425	.3113 .3026	.3114 .3042	.3737 .3643	.3739 .3557	.4361 .4258	.4362 .4281	.4985 .4876	.4987 .4906	.5609 .5495	.5611 .5524	.6234 .6113	.6236 .6149
D	Min. Thread Length	.750		.875		1.000		1.125		1.250		1.375		1.500	
L	LENGTH	FORD PART NUMBERS													
	1/2	42910-S	42931-S	42952-S	42973-S	42994-S	43015-S	43036-S	43061-S						
	5/8	42911-S	42932-S	42953-S	42974-S	42995-S	43016-S	43037-S	43062-S	43086-S	43110-S				
	3/4	42912-S	42933-S	42954-S	42975-S	42996-S	43017-S	43038-S	43063-S	43087-S	43111-S	43134-S	43157-S	43180-S	43203-S
	7/8	42913-S	42934-S	42955-S	42976-S	42997-S	43018-S	43039-S	43064-S	43088-S	43112-S	43135-S	43158-S	43181-S	43204-S
	1	42914-S	42935-S	42956-S	42977-S	42998-S	43019-S	43040-S	43065-S	43089-S	43113-S	43136-S	43159-S	43182-S	43205-S
	1-1/8	42915-S	42936-S	42957-S	42978-S	42999-S	43020-S	43041-S	43066-S	43090-S	43114-S	43137-S	43160-S	43183-S	43206-S
	1-1/4	42916-S	42937-S	42958-S	42979-S	43000-S	43021-S	43042-S	43067-S	43091-S	43115-S	43138-S	43161-S	43184-S	43207-S
	1-3/8	42917-S	42938-S	42959-S	42980-S	43001-S	43022-S	43043-S	43068-S	43092-S	43116-S	43139-S	43162-S	43185-S	43208-S
	1-1/2	42918-S	42939-S	42960-S	42981-S	43002-S	43023-S	43044-S	43069-S	43093-S	43117-S	43140-S	43163-S	43186-S	43209-S
	1-5/8	42919-S	42940-S	42961-S	42982-S	43003-S	43024-S	43045-S	43070-S	43094-S	43118-S	43141-S	43164-S	43187-S	43210-S
	1-3/4	42920-S	42941-S	42962-S	42983-S	43004-S	43025-S	43046-S	43071-S	43095-S	43119-S	43142-S	43165-S	43188-S	43211-S
	1-7/8	42921-S	42942-S	42963-S	42984-S	43005-S	43026-S	43047-S	43072-S	43096-S	43120-S	43143-S	43166-S	43189-S	43212-S
	2	42922-S	42943-S	42964-S	42985-S	43006-S	43027-S	43048-S	43073-S	43097-S	43121-S	43144-S	43167-S	43190-S	43213-S
	2-1/8	42923-S	42944-S	42965-S	42986-S	43007-S	43028-S	43049-S	43074-S	43098-S	43122-S	43145-S	43168-S	43191-S	43214-S
	2-1/4	42924-S	42945-S	42966-S	42987-S	43008-S	43029-S	43050-S	43075-S	43099-S	43123-S	43146-S	43169-S	43192-S	43215-S
	2-3/8	42925-S	42946-S	42967-S	42988-S	43009-S	43030-S	43051-S	43076-S	43100-S	43124-S	43147-S	43170-S	43193-S	43216-S
	2-1/2	42926-S	42947-S	42968-S	42989-S	43010-S	43031-S	43052-S	43077-S	43101-S	43125-S	43148-S	43171-S	43194-S	43217-S
	2-5/8	42927-S	42948-S	42969-S	42990-S	43011-S	43032-S	43053-S	43078-S	43102-S	43126-S	43149-S	43172-S	43195-S	43218-S
	2-3/4	42928-S	42949-S	42970-S	42991-S	43012-S	43033-S	43054-S	43079-S	43103-S	43127-S	43150-S	43173-S	43196-S	43219-S
	2-7/8	42929-S	42950-S	42971-S	42992-S	43013-S	43034-S	43055-S	43080-S	43104-S	43128-S	43151-S	43174-S	43197-S	43220-S
	3	42930-S	42951-S	42972-S	42993-S	43014-S	43035-S	43056-S	43081-S	43105-S	43129-S	43152-S	43175-S	43198-S	43221-S
	3-1/4							43057-S	43082-S	43106-S	43130-S	43153-S	43176-S	43199-S	43222-S
	3-1/2							43058-S	43083-S	43107-S	43131-S	43154-S	43177-S	43200-S	43223-S
	3-3/4							43059-S	43084-S	43108-S	43132-S	43155-S	43178-S	43201-S	43224-S
	4							43060-S	43085-S	43109-S	43133-S	43156-S	43179-S	43202-S	43225-S

NOTES: For General Specifications see Page B-950.01; Recommended Finishes: S & S-8. For other Finishes see Section "Z" Addendum.
MATERIAL: M-3500-G
Point should be flat and chamfered from approximately 1/64" below the minor diameter, the length of point to be from 1/2 to 1-1/2 threads.
End may be cupped .15 D max.

FORD MOTOR COMPANY
STANDARD PARTS

HEXAGON BOLTS

SELF LOCKING
CLASS 2A

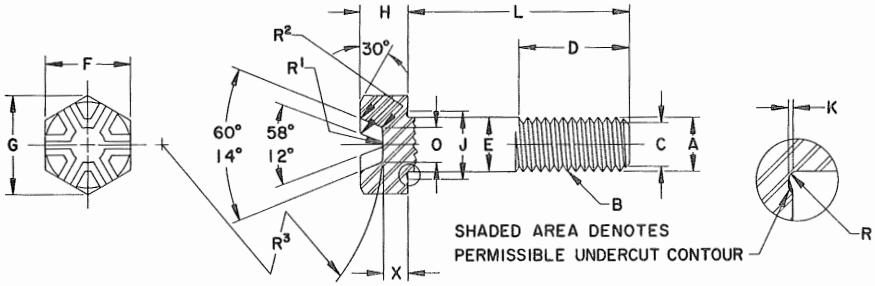

	Nominal Diameter	1/4		5/16		3/8		7/16		1/2		9/16		5/8	
E	Actual Diameter	.2500-.2450		.3125-.3065		.3750-.3690		.4375-.4305		.5000-.4930		.5625-.5545		.6250-.617	
F	Head Width	.4375-.428		.5000-.489		.5625-.551		.6250-.612		.7500-.736		.8125-.798		.8750-.860	
G	Across Corner	.505 -.488		.577 -.557		.650 -.628		.722 -.698		.866 -.840		.938 -.910		1.010 -.980	
H	Head Thickness	.135 -.125		.198 -.188		.260 -.250		.291 -.281		.327 -.312		.390 -.375		.390 -.375	
J	Undercut Diameter	.327 -.307		.406 -.386		.484 -.464		.546 -.526		.640 -.620		.703 -.683		.760 -.740	
K	Undercut Depth	.007 -.004		.013 -.010		.013 -.010		.013 -.010		.013 -.010		.013 -.010		.013 -.010	
O	Recess Diameter	.166 -.146		.208 -.188		.250 -.230		.288 -.268		.332 -.312		.374 -.354		.416 -.396	
R¹	Radius	.024 -.016		.024 -.016		.031 -.016		.031 -.016		.031 -.016		.031 -.016		.047 -.016	
R²	Radius	.031 -.016		.031 -.016		.031 -.016		.031 -.016		.031 -.016		.031 -.016		.031 -.016	
R³	Radius	2.00 -1.50		2.00 -1.50		2.00 -1.50		2.00 -1.50		2.00 -1.50		2.00 -1.50		3.50 -3.00	
X	Check Dimension	.110 -.090		.145 -.125		.185 -.165		.205 -.185		.220 -.200		.260 -.240		.290 -.270	
B	Threads per Inch	20	28	18	24	16	24	14	20	13	20	12	18	11	18
	Pitch Diameter Plain	.2164 .2127	.2258 .2225	.2752 .2712	.2843 .2806	.3331 .3287	.3468 .3430	.3897 .3850	.4037 .3995	.4485 .4435	.4662 .4619	.5068 .5016	.5250 .5205	.5644 .5589	.5875 .5828
	Pitch Diameter When Plated - Max.	.2175	.2268	.2764	.2854	.3344	.3479	.3911	.4050	.4500	.4675	.5084	.5264	.5660	.5889
C	Minor Dia. - Max.	.1876	.2052	.2431	.2603	.2970	.3228	.3485	.3749	.4041	.4374	.4587	.4929	.5119	.5554
A	Major Diameter Thread	.2489 .2408	.2490 .2425	.3113 .3026	.3114 .3042	.3737 .3643	.3739 .3667	.4361 .4258	.4362 .4281	.4985 .4876	.4987 .4906	.5609 .5495	.5611 .5524	.6234 .6113	.6236 .6149
D	Min. Thread Length	.750		.875		1.000		1.125		1.250		1.375		1.500	
L	LENGTH	FORD PART NUMBERS													
	1/2	45920-S	45941-S	45962-S	45983-S	46004-S	46025-S	46046-S	46071-S						
	5/8	45921-S	45942-S	45963-S	45984-S	46005-S	46026-S	46047-S	46072-S	46096-S	46120-S				
	3/4	45922-S	45943-S	45964-S	45985-S	46006-S	46027-S	46048-S	46073-S	46097-S	46121-S	46144-S	46167-S	46190-S	46213-S
	7/8	45923-S	45944-S	45965-S	45986-S	46007-S	46028-S	46049-S	46074-S	46098-S	46122-S	46145-S	46168-S	46191-S	46214-S
	1	45924-S	45945-S	45966-S	45987-S	46008-S	46029-S	46050-S	46075-S	46099-S	46123-S	46146-S	46169-S	46192-S	46215-S
	1-1/8	45925-S	45946-S	45967-S	45988-S	46009-S	46030-S	46051-S	46076-S	46100-S	46124-S	46147-S	46170-S	46193-S	46216-S
	1-1/4	45926-S	45947-S	45968-S	45989-S	46010-S	46031-S	46052-S	46077-S	46101-S	46125-S	46148-S	46171-S	46194-S	46217-S
	1-3/8	45927-S	45948-S	45969-S	45990-S	46011-S	46032-S	46053-S	46078-S	46102-S	46126-S	46149-S	46172-S	46195-S	46218-S
	1-1/2	45928-S	45949-S	45970-S	45991-S	46012-S	46033-S	46054-S	46079-S	46103-S	46127-S	46150-S	46173-S	46196-S	46219-S
	1-5/8	45929-S	45950-S	45971-S	45992-S	46013-S	46034-S	46055-S	46080-S	46104-S	46128-S	46151-S	46174-S	46197-S	46220-S
	1-3/4	45930-S	45951-S	45972-S	45993-S	46014-S	46035-S	46056-S	46081-S	46105-S	46129-S	46152-S	46175-S	46198-S	46221-S
	1-7/8	45931-S	45952-S	45973-S	45994-S	46015-S	46036-S	46057-S	46082-S	46106-S	46130-S	46153-S	46176-S	46199-S	46222-S
	2	45932-S	45953-S	45974-S	45995-S	46016-S	46037-S	46058-S	46083-S	46107-S	46131-S	46154-S	46177-S	46200-S	46223-S
	2-1/8	45933-S	45954-S	45975-S	45996-S	46017-S	46038-S	46059-S	46084-S	46108-S	46132-S	46155-S	46178-S	46201-S	46224-S
	2-1/4	45934-S	45955-S	45976-S	45997-S	46018-S	46039-S	46060-S	46085-S	46109-S	46133-S	46156-S	46179-S	46202-S	46225-S
	2-3/8	45935-S	45956-S	45977-S	45998-S	46019-S	46040-S	46061-S	46086-S	46110-S	46134-S	46157-S	46180-S	46203-S	46226-S
	2-1/2	45936-S	45957-S	45978-S	45999-S	46020-S	46041-S	46062-S	46087-S	46111-S	46135-S	46158-S	46181-S	46204-S	46227-S
	2-5/8	45937-S	45958-S	45979-S	46000-S	46021-S	46042-S	46063-S	46088-S	46112-S	46136-S	46159-S	46182-S	46205-S	46228-S
	2-3/4	45938-S	45959-S	45980-S	46001-S	46022-S	46043-S	46064-S	46089-S	46113-S	46137-S	46160-S	46183-S	46206-S	46229-S
	2-7/8	45939-S	45960-S	45981-S	46002-S	46023-S	46044-S	46065-S	46090-S	46114-S	46138-S	46161-S	46184-S	46207-S	46230-S
	3	45940-S	45961-S	45982-S	46003-S	46024-S	46045-S	46066-S	46091-S	46115-S	46139-S	46162-S	46185-S	46208-S	46231-S
	3-1/4							46067-S	46092-S	46116-S	46140-S	46163-S	46186-S	46209-S	46232-S
	3-1/2							46068-S	46093-S	46117-S	46141-S	46164-S	46187-S	46210-S	46233-S
	3-3/4							46069-S	46094-S	46118-S	46142-S	46165-S	46188-S	46211-S	46234-S
	4							46070-S	46095-S	46119-S	46143-S	46166-S	46189-S	46212-S	46235-S

NOTES: For General Specifications see Page B-950.01. Recommended Finishes: S & S-8. For other Finishes see Section "Z" Addendum.
MATERIAL: M-3500-E
Point should be flat and chamfered from approximately 1/64" below the minor diameter, the length of point to be from 1/2 to 1-1/2 threads.
End may be cupped .15 E max.

FORD MOTOR COMPANY
STANDARD PARTS

SQUARE HEAD BOLTS — CLASS 2A

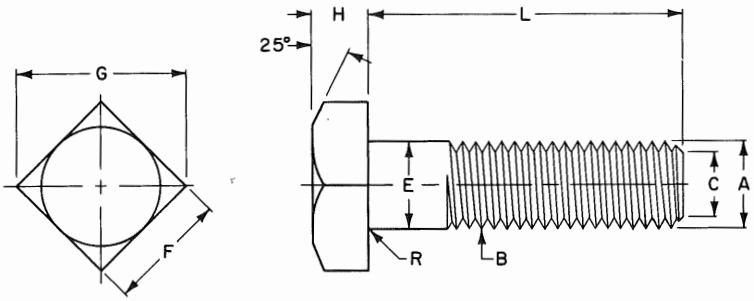

	Diameter Nominal	1/4	5/16	3/8	7/16	1/2	5/8	3/4
E	Diameter Actual	.2800 .2175	.342 .2764	.405 .3344	.468 .3911	.530 .4500	.675 .5660	.800 .6850
F	Head Width	.3750 .362	.5000 .484	.5625 .544	.6250 .603	.7500 .725	.9375 .906	1.125 1.088
G	Across Corners	.530 .498	.707 .665	.795 .747	.884 .828	1.061 .995	1.326 1.244	1.591 1.494
H	Head Thickness	.188 .156	.220 .186	.268 .232	.316 .278	.348 .308	.444 .400	.524 .476
R	Radius, Max.	.031	.031	.031	.031	.031	.062	.062
B	Threads per Inch	20	18	16	14	13	11	10
	Pitch Diameter Plain	.2164 .2127	.2752 .2712	.3331 .3287	.3897 .3850	.4485 .4435	.5644 .5589	.6832 .6773
	Pitch Diameter When Plated - Max.	.2175	.2764	.3344	.3911	.4500	.5660	.6850
C	Minor Dia. - Max.	.1876	.2431	.2970	.3485	.4041	.5119	.6255
A	Major Dia. Thread	.2489 .2408	.3113 .3026	.3737 .3643	.4361 .4258	.4985 .4876	.6234 .6113	.7482 .7353

L LENGTH	FORD PART NUMBERS						
1/2 5/8 3/4	22980-S 22984-S 22988-S	22981-S 22985-S 22989-S	22982-S 22986-S 22990-S	22983-S 22987-S 22991-S	22992-S		
7/8 1 1 1/8 1 1/4	22994-S 23000-S 23008-S 23016-S	22995-S 23001-S 23009-S 23017-S	22996-S 23002-S 23010-S 23018-S	22997-S 23003-S 23011-S 23019-S	22998-S 23004-S 23012-S 23020-S	23006-S 23014-S 23022-S	23007-S 23015-S 23023-S
1 3/8 1 1/2 1 3/4 2	23024-S 23032-S 23040-S 23048-S	23025-S 23033-S 23041-S 23049-S	23026-S 23034-S 23042-S 23050-S	23027-S 23035-S 23043-S 23051-S	23028-S 23036-S 23044-S 23052-S	23030-S 23038-S 23046-S 23054-S	23031-S 23039-S 23047-S 23055-S
2 1/4 2 1/2 2 3/4 3	23056-S 23064-S 23072-S 23080-S	23057-S 23065-S 23073-S 23081-S	23058-S 23066-S 23074-S 23082-S	23059-S 23067-S 23075-S 23083-S	23060-S 23068-S 23076-S 23084-S	23062-S 23070-S 23078-S 23086-S	23063-S 23071-S 23079-S 23087-S
3 1/4 3 1/2 3 3/4 4	23088-S 23096-S 23104-S 23112-S	23089-S 23097-S 23105-S 23113-S	23090-S 23098-S 23106-S 23114-S	23091-S 23099-S 23107-S 23115-S	23092-S 23100-S 23108-S 23116-S	23094-S 23102-S 23110-S 23118-S	23095-S 23103-S 23111-S 23119-S
4 1/2 5 5 1/2 6	23120-S 23128-S 23136-S 23144-S	23121-S 23129-S 23137-S 23145-S	23122-S 23130-S 23138-S 23146-S	23123-S 23131-S 23139-S 23147-S	23124-S 23132-S 23140-S 23148-S	23126-S 23134-S 23142-S 23150-S	23127-S 23135-S 23143-S 23151-S
6 1/2 7 7 1/2 8	23152-S 23160-S 23168-S 23176-S	23153-S 23161-S 23169-S 23177-S	23154-S 23162-S 23170-S 23178-S	23155-S 23163-S 23171-S 23179-S	23156-S 23164-S 23172-S 23180-S	23158-S 23166-S 23174-S 23182-S	23159-S 23167-S 23175-S 23183-S

NOTES: For General Specifications See Page B-950.01. For Finishes See Addendum.
MATERIAL: M-3500-A.

FORD MOTOR COMPANY
STANDARD PARTS

THIN ROUND HEAD BOLTS

CLASS 2A
WIRE SIZE BODY

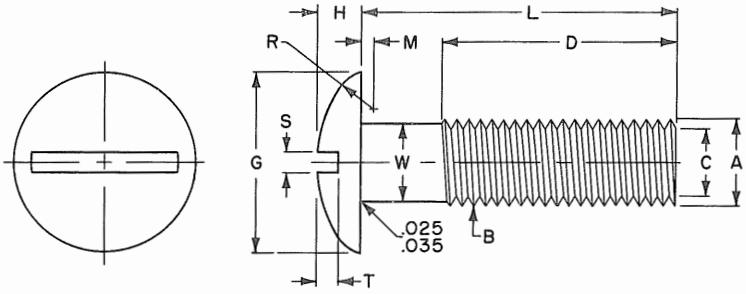

	Diameter Nominal	#10	1/4		5/16		3/8		7/16		1/2		9/16		5/8	
D	Thread Length	.818 .630	.9375 .750		1.063 .875		1.188 1.00		1.313 1.125		1.438 1.250		1.563 1.375		1.688 1.500	
G	Head Diameter	.448 .428	.573 .553		.698 .678		.823 .803		.947 .927		1.072 1.052		1.198 1.178		1.322 1.302	
H	Head Thickness	.104 .084	.135 .115		.166 .146		.198 .178		.229 .209		.260 .240		.291 .271		.323 .303	
S	Slot Width	.060 .050	.075 .064		.084 .072		.094 .081		.094 .081		.106 .091		.118 .102		.133 .116	
T	Slot Depth	.053 .034	.070 .046		.088 .058		.106 .070		.124 .082		.142 .094		.160 .106		.178 .118	
M	Hd. Rad. Offset	.031	.031		.031		.031		.063		.063		.063		.063	
R	Hd. Flange Rad.	.094	.125		.125		.156		.188		.188		.188		.188	
B	Thds. per Inch	32	20	28	18	24	16	24	14	20	13	20	12	18	11	18
	Pitch Dia.-Plain	.1688 .1658	.2164 .2127	.2258 .2225	.2752 .2712	.2843 .2806	.3331 .3287	.3468 .3430	.3897 .3850	.4037 .3995	.4485 .4435	.4662 .4619	.5068 .5016	.5250 .5205	.5644 .5589	.5875 .5828
	Pitch Dia. When Plated-Maximum	.1697	.2175	.2268	.2764	.2854	.3344	.3479	.3911	.4050	.4500	.4675	.5084	.5264	.5660	.5889
C	Minor Dia. Thd.	.1508	.1876	.2052	.2431	.2603	.2970	.3228	.3485	.3749	.4041	.4374	.4587	.4929	.5119	.5554
A	Major Dia. Thd.	.1891 .1831	.2489 .2408	.2490 .2425	.3113 .3026	.3114 .3042	.3737 .3643	.3739 .3667	.4361 .4258	.4362 .4281	.4985 .4876	.4987 .4906	.5609 .5495	.5611 .5524	.6234 .6113	.6236 .6149
W	Body Diameter	.169 .167	.217 .213	.226 .223	.276 .272	.285 .282	.334 .330	.347 .344	.391 .386	.405 .401	.450 .445	.467 .463	.508 .503	.526 .522	.566 .560	.588 .584

L LENGTH	FORD PART NUMBERS														
1/2 5/8 3/4	35000-S 35030-S 35045-S	35001-S 35031-S 35046-S	35002-S 35032-S 35047-S	35003-S 35033-S 35048-S	35004-S 35034-S 35049-S	35005-S 35035-S 35050-S	35006-S 35036-S 35051-S	35007-S 35037-S 35052-S	35008-S 35038-S 35053-S	35009-S 35039-S 35054-S	35010-S 35040-S 35055-S	35011-S 35041-S 35056-S	35012-S 35042-S 35057-S	35013-S 35043-S 35058-S	35014-S 35044-S 35059-S
7/8 1 1 1/8 1 1/4	35060-S 35075-S 35090-S 35105-S	35061-S 35076-S 35091-S 35106-S	35062-S 35077-S 35092-S 35107-S	35063-S 35078-S 35093-S 35108-S	35064-S 35079-S 35094-S 35109-S	35065-S 35080-S 35095-S 35110-S	35066-S 35081-S 35096-S 35111-S	35067-S 35082-S 35097-S 35112-S	35068-S 35083-S 35098-S 35113-S	35069-S 35084-S 35099-S 35114-S	35070-S 35085-S 35100-S 35115-S	35071-S 35086-S 35101-S 35116-S	35072-S 35087-S 35102-S 35117-S	35073-S 35088-S 35103-S 35118-S	35074-S 35089-S 35104-S 35119-S
1 3/8 1 1/2 1 5/8 1 3/4	35120-S 35135-S 35150-S 35165-S	35121-S 35136-S 35151-S 35166-S	35122-S 35137-S 35152-S 35167-S	35123-S 35138-S 35153-S 35168-S	35124-S 35139-S 35154-S 35169-S	35125-S 35140-S 35155-S 35170-S	35126-S 35141-S 35156-S 35171-S	35127-S 35142-S 35157-S 35172-S	35128-S 35143-S 35158-S 35173-S	35129-S 35144-S 35159-S 35174-S	35130-S 35145-S 35160-S 35175-S	35131-S 35146-S 35161-S 35176-S	35132-S 35147-S 35162-S 35177-S	35133-S 35148-S 35163-S 35178-S	35134-S 35149-S 35164-S 35179-S
2 2 1/4 2 1/2 2 3/4	35180-S 35195-S 35210-S 35225-S	35181-S 35196-S 35211-S 35226-S	35182-S 35197-S 35212-S 25227-S	35183-S 35198-S 35213-S 35228-S	35184-S 35199-S 35214-S 35229-S	35185-S 35200-S 35215-S 35230-S	35186-S 35201-S 35216-S 35231-S	35187-S 35202-S 35217-S 35232-S	35188-S 35203-S 35218-S 35233-S	35189-S 35204-S 35219-S 35234-S	35190-S 35205-S 35220-S 35235-S	35191-S 35206-S 35221-S 35236-S	35192-S 35207-S 35222-S 35237-S	35193-S 35208-S 35223-S 35238-S	35194-S 35209-S 35224-S 35239-S
3 3 1/4 3 1/2 3 3/4	35240-S 35255-S 35270-S 35285-S	35241-S 35256-S 35271-S 35286-S	35242-S 35257-S 35272-S 35287-S	35243-S 35258-S 35273-S 35288-S	35244-S 35259-S 35274-S 35289-S	35245-S 35260-S 35275-S 35290-S	35246-S 35261-S 35276-S 35291-S	35247-S 35262-S 35277-S 35292-S	35248-S 35263-S 35278-S 35293-S	35249-S 35264-S 35279-S 35294-S	35250-S 35265-S 35280-S 35295-S	35251-S 35266-S 35281-S 35296-S	35252-S 35267-S 35282-S 35297-S	35253-S 35268-S 35283-S 35298-S	35254-S 35269-S 35284-S 35299-S
4 4 1/4 4 1/2 4 3/4	35300-S 35315-S 35330-S 35345-S	35301-S 35316-S 35331-S 35346-S	35302-S 35317-S 35332-S 35347-S	35303-S 35318-S 35333-S 35348-S	35304-S 35319-S 35334-S 35349-S	35305-S 35320-S 35335-S 35350-S	35306-S 35321-S 35336-S 35351-S	35307-S 35322-S 35337-S 35352-S	35308-S 35323-S 35338-S 35353-S	35309-S 35324-S 35339-S 35354-S	35310-S 35325-S 35340-S 35355-S	35311-S 35326-S 35341-S 35356-S	35312-S 35327-S 35342-S 35357-S	35313-S 35328-S 35343-S 35358-S	35314-S 35329-S 35344-S 35359-S
5 5 1/4 5 1/2 5 3/4	35360-S 35375-S 35390-S 35405-S	35361-S 35376-S 35391-S 35406-S	35362-S 35377-S 35392-S 35407-S	35363-S 35378-S 35393-S 35408-S	35364-S 35379-S 35394-S 35409-S	35365-S 35380-S 35395-S 35410-S	35366-S 35381-S 35396-S 35411-S	35367-S 35382-S 35397-S 35412-S	35368-S 35383-S 35398-S 35413-S	35369-S 35384-S 35399-S 35414-S	35370-S 35385-S 35400-S 35415-S	35371-S 35386-S 35401-S 35416-S	35372-S 35387-S 35402-S 35417-S	35373-S 35388-S 35403-S 35418-S	35374-S 35389-S 35404-S 35419-S
6 6 1/4 6 1/2 6 3/4	35420-S 35435-S 35450-S 35465-S	35421-S 35436-S 35451-S 35466-S	35422-S 35437-S 35452-S 35467-S	35423-S 35438-S 35453-S 35468-S	35424-S 35439-S 35454-S 35469-S	35425-S 35440-S 35455-S 35470-S	35426-S 35441-S 35456-S 35471-S	35427-S 35442-S 35457-S 35472-S	35428-S 35443-S 35458-S 35473-S	35429-S 35444-S 35459-S 35474-S	35430-S 35445-S 35460-S 35475-S	35431-S 35446-S 35461-S 35476-S	35432-S 35447-S 35462-S 35477-S	35433-S 35448-S 35463-S 35478-S	35434-S 35449-S 35464-S 35479-S

NOTES: For General Specifications See Page B-950.01.. For Finishes See Addendum.
MATERIAL: M-3500-A
Bolt body equal to major diameter is optional with wire size body.

FORD MOTOR COMPANY
STANDARD PARTS

THIN ROUND HEAD BOLT

CLASS 2A
WIRE SIZE BODY
POINTED

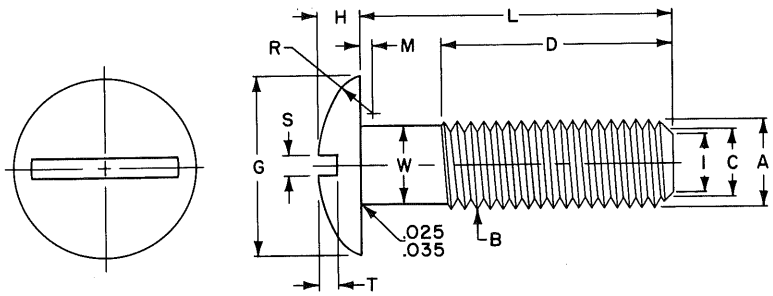

	Diameter Nominal	#10	1/4		5/16		3/8		7/16		1/2		9/16		5/8	
D	Thread Length	.818 .630	.9375 .750		1.063 .875		1.188 1.00		1.313 1.125		1.438 1.250		1.563 1.375		1.688 1.500	
G	Head Diameter	.448 .428	.573 .553		.698 .678		.823 .803		.947 .927		1.072 1.052		1.198 1.178		1.322 1.302	
H	Head Thickness	.104 .084	.135 .115		.166 .146		.198 .178		.229 .209		.260 .240		.291 .271		.323 .303	
S	Slot Width	.060 .050	.075 .064		.084 .072		.094 .081		.094 .081		.106 .091		.118 .102		.133 .116	
T	Slot Depth	.053 .034	.070 .046		.088 .058		.106 .070		.124 .082		.142 .094		.160 .106		.178 .118	
M	Hd. Rad. Offset	.031	.031		.031		.031		.063		.063		.063		.063	
R	Hd. Flange Rad.	.094	.125		.125		.156		.188		.188		.188		.188	
B	Thds. per Inch	32	20	28	18	24	16	24	14	20	13	20	12	18	11	18
	Pitch Dia.-Plain	.1688 .1658	.2164 .2127	.2258 .2225	.2752 .2712	.2843 .2806	.3331 .3287	.3468 .3430	.3897 .3850	.4037 .3995	.4485 .4435	.4662 .4619	.5068 .5016	.5250 .5205	.5644 .5589	.5875 .5828
	Pitch Dia. When Plated - Maximum	.1697	.2175	.2268	.2764	.2854	.3344	.3479	.3911	.4050	.4500	.4675	.5084	.5264	.5660	.5889
C	Minor Dia. Thread	.1508	.1876	.2052	.2431	.2603	.2970	.3228	.3485	.3749	.4041	.4374	.4587	.4929	.5119	.5554
A	Major Dia. Thread	.1891 .1831	.2489 .2408	.2490 .2425	.3113 .3026	.3114 .3042	.3737 .3643	.3739 .3667	.4361 .4258	.4362 .4281	.4985 .4876	.4987 .4906	.5609 .5495	.5611 .5524	.6234 .6113	.6236 .6149
W	Body Diameter	.169 .167	.217 .213	.226 .223	.276 .272	.285 .282	.334 .330	.347 .344	.391 .386	.405 .401	.450 .445	.467 .463	.508 .503	.526 .522	.566 .560	.588 .584
I	Point Diameter	.139 .125	.173 .156	.189 .170	.223 .202	.239 .216	.273 .247	.296 .269	.320 .290	.344 .312	.371 .336	.401 .364	.421 .382	.452 .411	.469 .426	.509 .463

L LENGTH — FORD PART NUMBERS

L																
1/2	35480-S	35481-S	35482-S	35483-S	35484-S	35485-S	35486-S	35487-S	35488-S	35489-S	35490-S	35491-S	35492-S	35493-S	35494-S
5/8	35510-S	35511-S	35512-S	35513-S	35514-S	35515-S	35516-S	35517-S	35518-S	35519-S	35520-S	35521-S	35522-S	35523-S	35524-S
3/4	35525-S	35526-S	35527-S	35528-S	35529-S	35530-S	35531-S	35532-S	35533-S	35534-S	35535-S	35536-S	35537-S	35538-S	35539-S
7/8	35540-S	35541-S	35542-S	35543-S	35544-S	35545-S	35546-S	35547-S	35548-S	35549-S	35550-S	35551-S	35552-S	35553-S	35554-S
1	35555-S	35556-S	35557-S	35558-S	35559-S	35560-S	35561-S	35562-S	35563-S	35564-S	35565-S	35566-S	35567-S	35568-S	35569-S
1 1/8	35570-S	35571-S	35572-S	35573-S	35574-S	35575-S	35576-S	35577-S	35578-S	35579-S	35580-S	35581-S	35582-S	35583-S	35584-S
1 1/4	35585-S	35586-S	35587-S	35588-S	35589-S	35590-S	35591-S	35592-S	35593-S	35594-S	35595-S	35596-S	35597-S	35598-S	35599-S
1 3/8	35600-S	35601-S	35602-S	35603-S	35604-S	35605-S	35606-S	35607-S	35608-S	35609-S	35610-S	35611-S	35612-S	35613-S	35614-S
1 1/2	35615-S	35616-S	35617-S	35618-S	35619-S	35620-S	35621-S	35622-S	35623-S	35624-S	35625-S	35626-S	35627-S	35628-S	35629-S
1 5/8	35630-S	35631-S	35632-S	35633-S	35634-S	35635-S	35636-S	35637-S	35638-S	35639-S	35640-S	35641-S	35642-S	35643-S	35644-S
1 3/4	35645-S	35646-S	35647-S	35648-S	35649-S	35650-S	35651-S	35652-S	35653-S	35654-S	35655-S	35656-S	35657-S	35658-S	35659-S
2	35660-S	35661-S	35662-S	35663-S	35664-S	35665-S	35666-S	35667-S	35668-S	35669-S	35670-S	35671-S	35672-S	35673-S	35674-S
2 1/4	35675-S	35676-S	35677-S	35678-S	35679-S	35680-S	35681-S	35682-S	35683-S	35684-S	35685-S	35686-S	35687-S	35688-S	35689-S
2 1/2	35690-S	35691-S	35692-S	35693-S	35694-S	35695-S	35696-S	35697-S	35698-S	35699-S	35700-S	35701-S	35702-S	35703-S	35704-S
2 3/4	35705-S	35706-S	35707-S	35708-S	35709-S	35710-S	35711-S	35712-S	35713-S	35714-S	35715-S	35716-S	35717-S	35718-S	35719-S
3	35720-S	35721-S	35722-S	35723-S	35724-S	35725-S	35726-S	35727-S	35728-S	35729-S	35730-S	35731-S	35732-S	35733-S	35734-S
3 1/4	35735-S	35736-S	35737-S	35738-S	35739-S	35740-S	35741-S	35742-S	35743-S	35744-S	35745-S	35746-S	35747-S	35748-S	35749-S
3 1/2	35750-S	35751-S	35752-S	35753-S	35754-S	35755-S	35756-S	35757-S	35758-S	35759-S	35760-S	35761-S	35762-S	35763-S	35764-S
3 3/4	35765-S	35766-S	35767-S	35768-S	35769-S	35770-S	35771-S	35772-S	35773-S	35774-S	35775-S	35776-S	35777-S	35778-S	35779-S
4	35780-S	35781-S	35782-S	35783-S	35784-S	35785-S	35786-S	35787-S	35788-S	35789-S	35790-S	35791-S	35792-S	35793-S	35794-S
4 1/4	35795-S	35796-S	35797-S	35798-S	35799-S	35800-S	35801-S	35802-S	35803-S	35804-S	35805-S	35806-S	35807-S	35808-S	35809-S
4 1/2	35810-S	35811-S	35812-S	35813-S	35814-S	35815-S	35816-S	35817-S	35818-S	35819-S	35820-S	35821-S	35822-S	35823-S	35824-S
4 3/4	35825-S	35826-S	35827-S	35828-S	35829-S	35830-S	35831-S	35832-S	35833-S	35834-S	35835-S	35836-S	35837-S	35838-S	35839-S
5	35840-S	35841-S	35842-S	35843-S	35844-S	35845-S	35846-S	35847-S	35848-S	35849-S	35850-S	35851-S	35852-S	35853-S	35854-S
5 1/4	35855-S	35856-S	35857-S	35858-S	35859-S	35860-S	35861-S	35862-S	35863-S	35864-S	35865-S	35866-S	35867-S	35868-S	35869-S
5 1/2	35870-S	35871-S	35872-S	35873-S	35874-S	35875-S	35876-S	35877-S	35878-S	35879-S	35880-S	35881-S	35882-S	35883-S	35884-S
5 3/4	35885-S	35886-S	35887-S	35888-S	35889-S	35890-S	35891-S	35892-S	35893-S	35894-S	35895-S	35896-S	35897-S	35898-S	35899-S
6	35900-S	35901-S	35902-S	35903-S	35904-S	35905-S	35906-S	35907-S	35908-S	35909-S	35910-S	35911-S	35912-S	35913-S	35914-S
6 1/4	35915-S	35916-S	35917-S	35918-S	35919-S	35920-S	35921-S	35922-S	35923-S	35924-S	35925-S	35926-S	35927-S	35928-S	25929-S
6 1/2	35930-S	35931-S	35932-S	35933-S	35934-S	35935-S	35936-S	35937-S	35938-S	35939-S	35940-S	35941-S	35942-S	35943-S	35944-S
6 3/4	35945-S	35946-S	35947-S	35948-S	35949-S	35950-S	35951-S	35952-S	35953-S	35954-S	35955-S	35956-S	35957-S	35958-S	35959-S

NOTES: For General Specifications See Page B-950.01. For Finishes See Addendum.
MATERIAL: M-3500-A
Bolt body equal to major diameter is optional with wire size body.

FORD MOTOR COMPANY
STANDARD PARTS

CARRIAGE BOLTS

CLASS 2A

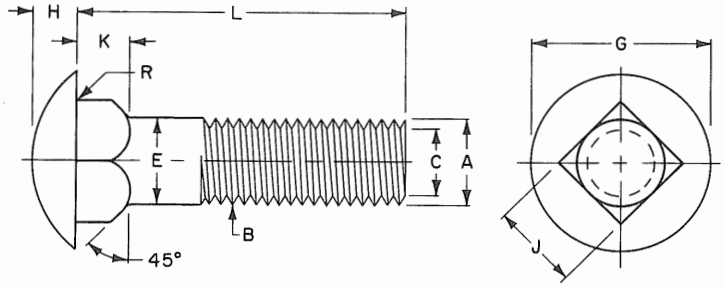

		#10	1/4		5/16		3/8		7/16		1/2		5/8	
E	Body Dia. Max.	.190	.250		.312		.375		.438		.500		.625	
G	Head Diameter	.469 .438	.594 .563		.719 .688		.844 .782		.969 .907		1.094 1.032		1.344 1.219	
H	Head Thickness	.114 .094	.145 .125		.176 .156		.208 .188		.239 .219		.270 .250		.344 .313	
J	Square Width	.199 .185	.260 .245		.324 .307		.388 .368		.452 .431		.515 .492		.642 .616	
K	Square Depth	.125 .094	.156 .125		.187 .156		.219 .188		.250 .219		.281 .250		.344 .313	
R	Radius - Max.	.031	.031		.031		.031		.031		.031		.062	
B	Threads per Inch	32	20	28	18	24	16	24	14	20	13	20	11	18
	Pitch Diameter Plain	.1688 .1658	.2164 .2127	.2258 .2225	.2752 .2712	.2843 .2806	.3331 .3287	.3468 .3430	.3897 .3850	.4037 .3995	.4485 .4435	.4662 .4619	.5644 .5589	.5875 .5828
	Pitch Diameter When Plated - Max.	.1697	.2175	.2268	.2764	.2854	.3344	.3479	.3911	.4050	.4500	.4675	.5660	.5889
C	Minor Dia. Max.	.1508	.1876	.2052	.2431	.2603	.2970	.3228	.3485	.3749	.4041	.4374	.5119	.5554
A	Major Dia. Thread	.1891 .1831	.2489 .2408	.2490 .2425	.3113 .3026	.3114 .3042	.3737 .3643	.3739 .3667	.4361 .4258	.4362 .4281	.4985 .4876	.4987 .4906	.6234 .6113	.6236 .6149

L LENGTH	FORD PART NUMBERS												
1/2 5/8	23350-S 23364-S	23351-S 23365-S	23352-S 23366-S	23353-S 23367-S	23354-S 23368-S	23369-S	23370-S	23371-S	23372-S	23373-S	23374-S		
3/4 7/8 1 1 1/8	23375-S 23390-S 23405-S 23420-S	23376-S 23391-S 23406-S 23421-S	23377-S 23392-S 23407-S 23422-S	23378-S 23393-S 23408-S 23423-S	23379-S 23394-S 23409-S 23424-S	23380-S 23395-S 23410-S 23425-S	23381-S 23396-S 23411-S 23426-S	23382-S 23397-S 23412-S 23427-S	23383-S 23398-S 23413-S 23428-S	23384-S 23399-S 23414-S 23429-S	23385-S 23400-S 23415-S 23430-S	23388-S 23403-S 23418-S 23433-S	23389-S 23404-S 23419-S 23434-S
1 1/4 1 3/8 1 1/2 1 5/8	23435-S 23450-S 23465-S 23480-S	23436-S 23451-S 23466-S 23481-S	23437-S 23452-S 23467-S 23482-S	23438-S 23453-S 23468-S 23483-S	23439-S 23454-S 23469-S 23484-S	23440-S 23455-S 23470-S 23485-S	23441-S 23456-S 23471-S 23486-S	23442-S 23457-S 23472-S 23487-S	23443-S 23458-S 23473-S 23488-S	23444-S 23459-S 23474-S 23489-S	23445-S 23460-S 23475-S 23490-S	23448-S 23463-S 23478-S 23493-S	23449-S 23464-S 23479-S 23494-S
1 3/4 2 2 1/4 2 1/2	23495-S 23510-S 23525-S 23540-S	23496-S 23511-S 23526-S 23541-S	23497-S 23512-S 23527-S 23542-S	23498-S 23513-S 23528-S 23543-S	23499-S 23514-S 23529-S 23544-S	23500-S 23515-S 23530-S 23545-S	23501-S 23516-S 23531-S 23546-S	23502-S 23517-S 23532-S 23547-S	23503-S 23518-S 23533-S 23548-S	23504-S 23519-S 23534-S 23549-S	23505-S 23520-S 23535-S 23550-S	23508-S 23523-S 23538-S 23553-S	23509-S 23524-S 23539-S 23554-S
2 3/4 3 3 1/4 3 1/2	23555-S 23570-S 23585-S 23600-S	23556-S 23571-S 23586-S 23601-S	23557-S 23572-S 23587-S 23602-S	23558-S 23573-S 23588-S 23603-S	23559-S 23574-S 23589-S 23604-S	23560-S 23575-S 23590-S 23605-S	23561-S 23576-S 23591-S 23606-S	23562-S 23577-S 23592-S 23607-S	23563-S 23578-S 23593-S 23608-S	23564-S 23579-S 23594-S 23609-S	23565-S 23580-S 23595-S 23610-S	23568-S 23583-S 23598-S 23613-S	23569-S 23584-S 23599-S 23614-S
3 3/4 4 4 1/4 4 1/2	23615-S 23630-S 23645-S 23660-S	23616-S 23631-S 23646-S 23661-S	23617-S 23632-S 23647-S 23662-S	23618-S 23633-S 23648-S 23663-S	23619-S 23634-S 23649-S 23664-S	23620-S 23635-S 23650-S 23665-S	23621-S 23636-S 23651-S 23666-S	23622-S 23637-S 23652-S 23667-S	23623-S 23638-S 23653-S 23668-S	23624-S 23639-S 23654-S 23669-S	23625-S 23640-S 23655-S 23670-S	23628-S 23643-S 23658-S 23673-S	23629-S 23644-S 23659-S 23674-S
4 3/4 5 5 1/4 5 1/2	23675-S 23690-S 23705-S 23720-S	23676-S 23691-S 23706-S 23721-S	23677-S 23692-S 23707-S 23722-S	23678-S 23693-S 23708-S 23723-S	23679-S 23694-S 23709-S 23724-S	23680-S 23695-S 23710-S 23725-S	23681-S 23696-S 23711-S 23726-S	23682-S 23697-S 23712-S 23727-S	23683-S 23698-S 23713-S 23728-S	23684-S 23699-S 23714-S 23729-S	23685-S 23700-S 23715-S 23730-S	23688-S 23703-S 23718-S 23733-S	23689-S 23704-S 23719-S 23734-S
5 3/4 6 6 1/2 7	23735-S	23736-S 23750-S 23764-S 23778-S	23737-S 23751-S 23765-S 23779-S	23738-S 23752-S 23766-S 23780-S	23739-S 23753-S 23767-S 23781-S	23740-S 23754-S 23768-S 23782-S	23741-S 23755-S 23769-S 23783-S	23742-S 23756-S 23770-S 23784-S	23743-S 23757-S 23771-S 23785-S	23744-S 23758-S 23772-S 23786-S	23745-S 23759-S 23773-S 23787-S	23748-S 23762-S 23776-S 23790-S	23749-S 23763-S 23777-S 23791-S
7 1/2 8 8 1/2 9		23792-S	23793-S	23794-S 23806-S 23818-S 23830-S	23795-S 23807-S 23819-S 23831-S	23796-S 23808-S 23820-S 23832-S	23797-S 23809-S 23821-S 23833-S	23798-S 23810-S 23822-S 23834-S	23799-S 23811-S 23823-S 23835-S	23800-S 23812-S 23824-S 23836-S	23801-S 23813-S 23825-S 23837-S	23804-S 23816-S 23828-S 23840-S	23805-S 23817-S 23829-S 23841-S
9 1/2 10 11 12				23842-S	23843-S	23844-S 23854-S 23864-S 23874-S	23845-S 23855-S 23865-S 23875-S	23846-S 23856-S 23866-S 23876-S	23847-S 23857-S 23867-S 23877-S	23848-S 23858-S 23868-S 23878-S	23849-S 23859-S 23869-S 23879-S	23852-S 23862-S 23872-S 23882-S	23853-S 23863-S 23873-S 23883-S

NOTES: For General Specifications See Page B-950.01. For Finishes See Addendum.
MATERIAL: M-3500-A
Wire Size Body Optional.
Bolt May be Sheared End With First Thread Incomplete, or They May be Round End, or Chamfered 45° to the Minor Diameter.

FORD MOTOR COMPANY
STANDARD PARTS

ROUND HEAD SHORT SQUARE NECK BOLTS — CLASS 2A

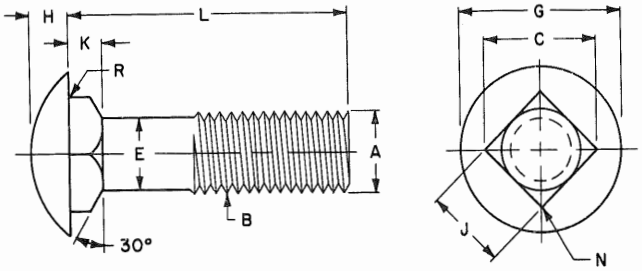

	Diameter Nominal	1/4	5/16	3/8	7/16	1/2	5/8	3/4
E	Body Diameter Max.	.250	.312	.375	.438	.500	.625	.750
G	Head Diameter	.594 .563	.719 .688	.844 .782	.969 .907	1.094 1.032	1.344 1.219	1.594 1.469
H	Head Height	.145 .125	.176 .156	.208 .188	.239 .219	.270 .250	.344 .313	.406 .375
K	Square Depth	.124 .093	.124 .093	.156 .125	.156 .125	.156 .125	.218 .187	.218 .187
J	Square Width	.260 .245	.324 .307	.388 .368	.452 .431	.515 .492	.642 .616	.768 .741
C	Across Corners	.368	.458	.549	.639	.728	.908	1.086
N	Corner Radius	1/32	1/32	3/64	3/64	3/64	5/64	5/64
R	Fillet Radius	1/32	1/32	1/32	1/32	1/32	1/16	1/16
B	Threads per Inch	20	18	16	14	13	11	10
	Pitch Diameter - Plain Pitch Dia. when Plated Max.	.2164 .2127 .2175	.2752 .2712 .2764	.3331 .3287 .3344	.3897 .3850 .3911	.4485 .4435 .4500	.5644 .5589 .5660	.6832 .6773 .6850
A	Major Diameter	.2489 .2408	.3113 .3026	.3737 .3643	.4361 .4258	.4985 .4876	.6234 .6113	.7482 .7353
L	See Below	FORD PART NUMBERS						
LENGTH	1/2 5/8 3/4 7/8	302315-S 302316-S 302317-S 302318-S	302351-S 302352-S 302353-S 302354-S	302408-S 302409-S 302410-S 302411-S	302428-S 302429-S 302430-S	302447-S 302448-S 302449-S	302474-S 302475-S	302508-S
	1 1 1/8 1 1/4 1 3/8	302368-S 302369-S 302370-S 302371-S	302355-S 302356-S 302357-S 302358-S	302319-S 302320-S 302321-S 302322-S	302363-S 302364-S 302365-S 302366-S	302335-S 302336-S 302337-S 302338-S	302476-S 302477-S 302478-S 302479-S	302509-S 302510-S 302511-S 302512-S
	1 1/2 1 5/8 1 3/4 1 7/8	302372-S 302373-S 302374-S 302375-S	302359-S 302360-S 302361-S 302362-S	302331-S 302332-S 302333-S 302334-S	302323-S 302324-S 302325-S 302326-S	302347-S 302348-S 302349-S 302350-S	302480-S 302481-S 302482-S 302483-S	302513-S 302514-S 302515-S 302516-S
	2 2 1/8 2 1/4 2 3/8	302376-S 302377-S 302378-S 302379-S	302388-S 302389-S 302390-S 302391-S	302339-S 302340-S 302341-S 302342-S	302327-S 302328-S 302329-S 302330-S	302450-S 302451-S 302452-S 302453-S	302484-S 302485-S 302486-S 302487-S	302517-S 302518-S 302519-S 302520-S
	2 1/2 2 3/4 3 3 1/4	302380-S 302381-S 302382-S 302383-S	302392-S 302393-S 302394-S 302395-S	302412-S 302413-S 302414-S 302415-S	302343-S 302367-S 302345-S 302346-S	302454-S 302455-S 302456-S 302457-S	302488-S 302489-S 302490-S 302491-S	302521-S 302522-S 302523-S 302524-S
	3 1/2 3 3/4 4 4 1/4	302384-S 302385-S 302386-S 302387-S	302396-S 302397-S 302398-S 302399-S	302416-S 302417-S 302418-S 302419-S	302431-S 302432-S 302433-S 302434-S	302458-S 302459-S 302460-S 302461-S	302492-S 302493-S 302494-S 302495-S	302525-S 302526-S 302527-S 302528-S
	4 1/2 4 3/4 5 5 1/4		302400-S 302401-S 302402-S 302403-S	302420-S 302421-S 302422-S 302423-S	302435-S 302436-S 302437-S 302438-S	302462-S 302463-S 302464-S 302465-S	302496-S 302497-S 302498-S 302499-S	302529-S 302530-S 302531-S 302532-S
	5 1/2 5 3/4 6 6 1/2		302404-S 302405-S 302406-S 302407-S	302424-S 302425-S 302426-S 302427-S	302439-S 302440-S 302441-S 302442-S	302466-S 302467-S 302468-S 302469-S	302500-S 302501-S 302502-S 302503-S	302533-S 302534-S 302535-S 302536-S
	7 7 1/2 8 8 1/2				302443-S 302444-S 302445-S 302446-S	302470-S 302471-S 302472-S 302473-S	302504-S 302505-S 302506-S 302507-S	302537-S 302538-S 302539-S 302542-S

NOTES: For General Specifications See Page B-950.01. For Finishes See Addendum.
MATERIAL: M-3500-A Steel.
Bolts may be sheared end with first thread incomplete, or they may be round end, or chamfered 45° to the minor diameter.

FORD MOTOR COMPANY
STANDARD PARTS

CARRIAGE BOLTS — CLASS 2A

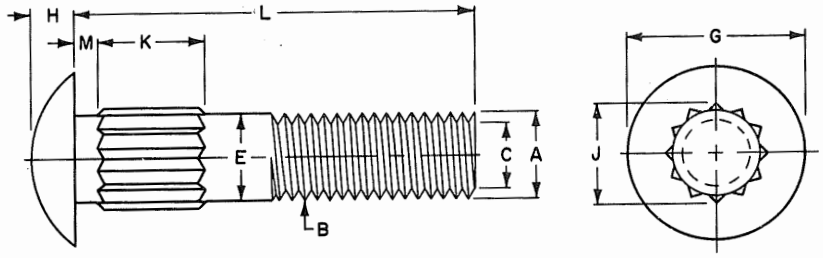

	Diameter Nominal	#10	1/4	5/16	3/8	7/16	1/2	5/8
E	Body Diameter - Maximum	.199	.260	.324	.388	.452	.515	.642
G	Head Diameter	.469 .438	.594 .563	.719 .688	.844 .782	.969 .907	1.094 1.032	1.344 1.210
H	Head Thickness	.114 .094	.145 .125	.176 .156	.208 .188	.239 .219	.270 .250	.344 .313
J	Rib Diameter - Minimum	.210	.274	.340	.405	.470	.534	.660
M	Distance (L 7/8" or less) (L 1" or more) (Tolerance + or - .031)	.031 .063	.031 .063	.031 .063	.031 .063	.031 .063	.031 .063	.094 .094
K	Length (L 7/8" or less) (L 1" & 1-1/8") (L 1-1/4" or more)	.188 .313 .500	.188 .313 .500	.188 .313 .500	.188 .313 .500	.188 .313 .500	.188 .313 .500	.188 .313 .500
B	Threads per Inch	32	20	18	16	14	13	11
	Pitch Diameter Plain	.1688 .1658	.2164 .2127	.2752 .2712	.3331 .3287	.3897 .3850	.4485 .4435	.5644 .5589
	Pitch Diameter When Plated - Maximum	.1697	.2175	.2764	.3344	.3911	.4500	.5660
C	Minor Diameter Maximum	.1508	.1876	.2431	.2970	.3485	.4041	.5119
A	Major Diameter Thread	.1891 .1831	.2489 .2408	.3113 .3026	.3737 .3643	.4361 .4258	.4985 .4876	.6234 .6113
	Number of Ribs Approximately	9	10	12	12	14	16	19

L LENGTH — FORD PART NUMBERS

L								
1 / 1 1/8 / 1 1/4 / 1 3/8	24100-S 24105-S 24110-S 24115-S	24101-S 24106-S 24111-S 24116-S	24102-S 24107-S 24112-S 24117-S	24103-S 24108-S 24113-S 24118-S	24104-S 24109-S 24114-S 24119-S		
1 1/2 / 1 5/8 / 1 3/4 / 1 7/8	24120-S 24126-S 24132-S 24138-S	24121-S 24127-S 24133-S 24139-S	24122-S 24128-S 24134-S 24140-S	24123-S 24129-S 24135-S 24141-S	24124-S 24130-S 24136-S 24142-S	24125-S 24131-S 24137-S 24143-S	
2 / 2 1/4 / 2 1/2 / 2 3/4	24144-S 24152-S 24160-S 24168-S	24145-S 24153-S 24161-S 24169-S	24146-S 24154-S 24162-S 24170-S	24147-S 24155-S 24163-S 24171-S	24148-S 24156-S 24164-S 24172-S	24149-S 24157-S 24165-S 24173-S	24151-S 24159-S 24167-S 24175-S
3 / 3 1/4 / 3 1/2 / 3 3/4	24176-S 24184-S 24192-S 24200-S	24177-S 24185-S 24193-S 24201-S	24178-S 24186-S 24194-S 24202-S	24179-S 24187-S 24195-S 24203-S	24180-S 24188-S 24196-S 24204-S	24181-S 24189-S 24197-S 24205-S	24183-S 24191-S 24199-S 24207-S
4 / 4 1/2 / 5 / 5 1/2	24208-S 24216-S 24224-S 24232-S	24209-S 24217-S 24225-S 24233-S	24210-S 24218-S 24226-S 24234-S	24211-S 24219-S 24227-S 24235-S	24212-S 24220-S 24228-S 24236-S	24213-S 24221-S 24229-S 24237-S	24215-S 24223-S 24231-S 24239-S
6 / 6 1/2 / 7 / 7 1/2	24240-S 24248-S 24256-S 24264-S	24241-S 24249-S 24257-S 24265-S	24242-S 24250-S 24258-S 24266-S	24243-S 24251-S 24259-S 24267-S	24244-S 24252-S 24260-S 24268-S	24245-S 24253-S 24261-S 24269-S	24247-S 24255-S 24263-S 24271-S
8 / 9 / 10	24272-S 24280-S 24288-S	24273-S 24281-S 24289-S	24274-S 24282-S 24290-S	24275-S 24283-S 24291-S	24276-S 24284-S 24292-S	24277-S 24285-S 24293-S	24279-S 24287-S 24295-S

NOTES: For General Specifications See Page B-950.01. For Finishes See Addendum.
MATERIAL: M-3500-A
Included Angle of Ribs Shall be Approximately 90°.
Bolts may be sheared end with first thread incomplete, or they may be round end, or chamfered 45° to the minor diameter.

FORD MOTOR COMPANY
STANDARD PARTS

STEP BOLTS — CLASS 2A

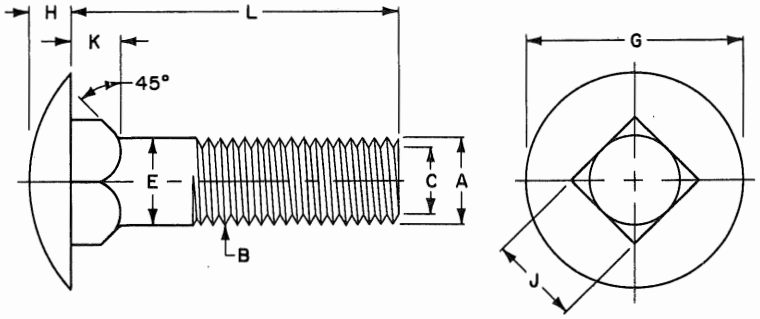

	Diameter - Nominal	#10	1/4	5/16	3/8	7/16	1/2
E	Body Diameter - Maximum	.190	.250	.312	.375	.438	.500
G	Head Diameter	.656 .625	.844 .813	1.031 1.000	1.219 1.188	1.406 1.375	1.594 1.563
H	Head Thickness	.114 .094	.145 .125	.176 .156	.208 .188	.239 .219	.270 .250
J	Square Width	.199 .185	.260 .245	.324 .307	.388 .368	.452 .431	.515 .492
K	Square Depth	.094 .125	.125 .156	.156 .187	.188 .219	.219 .250	.250 .281
B	Threads per Inch	32	20	18	16	14	13
	Pitch Diameter - Plain	.1688 .1658	.2164 .2127	.2752 .2712	.3331 .3287	.3897 .3850	.4485 .4435
	Pitch Diameter When Plated-Maximum	.1697	.2175	.2764	.3344	.3911	.4500
C	Minor Diameter Thread - Maximum	.1508	.1876	.2431	.2970	.3485	.4041
A	Major Diameter Thread	.1891 .1831	.2489 .2408	.3113 .3026	.3737 .3643	.4361 .4258	.4985 .4876

L LENGTH	FORD PART NUMBERS					
5/8, 3/4, 7/8, 1	23900-S 23906-S 23912-S 23918-S	23901-S 23907-S 23913-S 23919-S	23902-S 23908-S 23914-S 23920-S	23903-S 23909-S 23915-S 23921-S	23904-S 23910-S 23916-S 23922-S	23905-S 23911-S 23917-S 23923-S
1 1/8, 1 1/4, 1 3/8, 1 1/2	23924-S 23930-S 23936-S 23942-S	23925-S 23931-S 23937-S 23943-S	23926-S 23932-S 23938-S 23944-S	23927-S 23933-S 23939-S 23945-S	23928-S 23934-S 23940-S 23946-S	23929-S 23935-S 23941-S 23947-S
1 3/4, 2, 2 1/4, 2 1/2	23948-S 23954-S 23960-S 23966-S	23949-S 23955-S 23961-S 23967-S	23950-S 23956-S 23962-S 23968-S	23951-S 23957-S 23963-S 23969-S	23952-S 23958-S 23964-S 23970-S	23953-S 23959-S 23965-S 23971-S
2 3/4, 3, 3 1/4, 3 1/2	23972-S 23978-S 23984-S 23990-S	23973-S 23979-S 23985-S 23991-S	23974-S 23980-S 23986-S 23992-S	23975-S 23981-S 23987-S 23993-S	23976-S 23982-S 23988-S 23994-S	23977-S 23983-S 23989-S 23995-S
3 3/4, 4, 4 1/4, 4 1/2	23996-S 24002-S 24008-S 24014-S	23997-S 24003-S 24009-S 24015-S	23998-S 24004-S 24010-S 24016-S	23999-S 24005-S 24011-S 24017-S	24000-S 24006-S 24012-S 24018-S	24001-S 24007-S 24013-S 24019-S
4 3/4, 5, 5 1/2, 6		24020-S 24025-S 24030-S 24035-S	24021-S 24026-S 24031-S 24036-S	24022-S 24027-S 24032-S 24037-S	24023-S 24028-S 24033-S 24038-S	24024-S 24029-S 24034-S 24039-S
6 1/2, 7, 7 1/2, 8			24040-S 24044-S 24048-S 24052-S	24041-S 24045-S 24049-S 24053-S	24042-S 24046-S 24050-S 24054-S	24043-S 24047-S 24051-S 24055-S
8 1/2, 9, 9 1/2, 10				24056-S 24059-S 24062-S 24065-S	24057-S 24060-S 24063-S 24066-S	24058-S 24061-S 24064-S 24067-S

NOTES: For General Specifications See Page B-950.01. For Finishes See Addendum.
MATERIAL: M-3500-A
Wire Size Body Optional.
Bolts may be sheared end with first thread incomplete, or they may be round end, or chamfered 45° to the minor diameter.

FORD MOTOR COMPANY
STANDARD PARTS

PLOW BOLTS

CLASS 2A

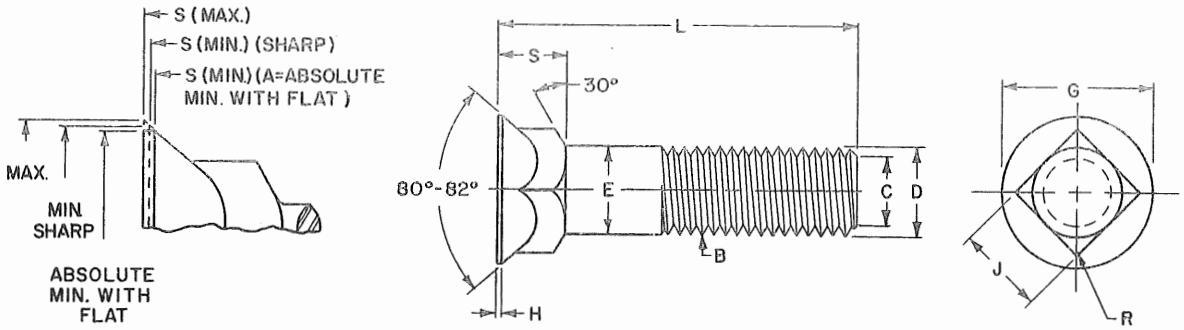

	Diameter Nominal	5/16		3/8		7/16		1/2		5/8		3/4	
E	Diameter Actual	.312-.299		.375-.360		.438-.421		.500-.483		.657-.606		.782-.729	
G	Dia. of Head Max.	.605		.708		.826		.945		1.147		1.303	
	Dia. of Head Min. Sharp	.578		.671		.781		.890		1.094		1.250	
	Dia. of Head Abs. Min. with Flat	.563		.656		.766		.875		1.063		1.219	
H	Feed Thickness Max.	.025		.031		.036		.042		.050		.050	
S	Depth of Square & Head Max.	.269		.312		.364		.417		.506		.541	
	Depth of Square & Head Min.	.243		.281		.328		.375		.456		.491	
J	Width of Square Max.	.325		.387		.450		.515		.640		.765	
	Width of Square Min.	.313		.375		.438		.500		.625		.750	
R	Radius on Corners of Sq. Max.	1/32		3/64		3/64		3/64		5/64		5/64	
B	Threads per Inch	18	24	16	24	14	20	13	20	11	18	10	16
	Pitch Diameter Plain Max.	.2752	.2843	.3331	.3468	.3897	.4037	.4485	.4662	.5644	.5875	.6832	.7079
	Pitch Diameter Plain Min.	.2712	.2806	.3287	.3430	.3850	.3995	.4435	.4619	.5589	.5828	.6773	.7029
	Pitch Dia. when Plated Max.	.2764	.2854	.3344	.3479	.3911	.4050	.4500	.4675	.5660	.5889	.6850	.7094
C	Minor Diameter Max.	.2431	.2603	.2970	.3228	.3485	.3749	.4041	.4374	.5119	.5554	.6255	.6718
D	Major Dia. Thread Max.	.3113	.3114	.3737	.3739	.4361	.4362	.4985	.4987	.6234	.6236	.7482	.7485
	Major Dia. Thread Min.	.3026	.3042	.3643	.3667	.4258	.4281	.4876	.4906	.6113	.6149	.7353	.7391
L	See Below	FORD PART NUMBERS											
LENGTH	3/4, 7/8, 1, 1 1/8	303641-S 303649-S 303651-S 303655-S	303642-S 303650-S 303652-S 303656-S	303643-S 300374-S 301138-S 300342-S	303644-S 301105-S 301106-S 301107-S	303645-S 301169-S 300355-S	303646-S 300653-S 300654-S	303647-S 303653-S 303658-S	303648-S 303654-S 303659-S				
	1 1/4, 1 3/8, 1 1/2, 1 5/8	303660-S 303666-S 303672-S 303678-S	303661-S 303667-S 303673-S 303679-S	301140-S 300343-S 301142-S 301143-S	301108-S 301109-S 301110-S 301111-S	300356-S 300357-S 300369-S 301174-S	300655-S 300656-S 300657-S 300658-S	303662-S 303668-S 303674-S 303680-S	303663-S 303669-S 303675-S 303681-S	301200-S 301201-S 301202-S 301203-S	300680-S 300812-S 300813-S 300814-S	303664-S 303670-S 303676-S 303682-S	303665-S 303671-S 303677-S 303683-S
	1 3/4, 1 7/8, 2, 2 1/4	303684-S 303690-S 303696-S 303708-S	303685-S 303691-S 303697-S 303709-S	300344-S 301145-S 301146-S 300377-S	301112-S 301113-S 301114-S 301116-S	301175-S 301176-S 301177-S 301179-S	300659-S 300660-S 300661-S 300718-S	303686-S 303692-S 303698-S 303710-S	303687-S 303693-S 303699-S 303711-S	301204-S 301205-S 301206-S 301208-S	300815-S 300816-S 300817-S 300819-S	303688-S 303694-S 303700-S 303712-S	303689-S 303695-S 303701-S 303713-S
	2 1/2, 2 3/4, 3, 3 1/4	303720-S 303726-S 303732-S 303738-S	303721-S 303727-S 303733-S 303739-S	301150-S 301151-S 300345-S 301153-S	301118-S 301119-S 301120-S 301121-S	301181-S 301182-S 301183-S 301184-S	300823-S 300824-S 300825-S 300826-S	303722-S 303728-S 303734-S 303740-S	303723-S 303729-S 303735-S 303741-S	301210-S 301211-S 301212-S 301213-S	300663-S 300664-S 300721-S 300678-S	303724-S 303730-S 303736-S 303742-S	303725-S 303731-S 303737-S 303743-S
	3 1/2, 3 3/4, 4, 4 1/4	303744-S 303750-S 303756-S 303762-S	303745-S 303751-S 303757-S 303763-S	300346-S 301155-S 301156-S 301157-S	301122-S 301123-S 301124-S 301125-S	301185-S 301186-S 301187-S 301188-S	300827-S 300828-S 300829-S 300830-S	303746-S 303752-S 303758-S 303764-S	303747-S 303753-S 303759-S 303765-S	301214-S 301215-S 301216-S 301217-S	300705-S 300722-S 300723-S 300724-S	303748-S 303754-S 303760-S 303766-S	302749-S 303755-S 303761-S 303767-S
	4 1/2, 4 3/4, 5, 5 1/4	303768-S 303774-S 303780-S 303786-S	303769-S 303775-S 303781-S 303787-S	301158-S 301159-S 301160-S 301161-S	301126-S 301127-S 301128-S 301129-S	301189-S 301190-S 301191-S 301192-S	300831-S 300832-S 300833-S 300834-S	303770-S 303776-S 303782-S 303788-S	303771-S 303777-S 303783-S 303789-S	301218-S 301219-S 301220-S 301221-S	300725-S 300665-S 300726-S 300846-S	303772-S 303778-S 303784-S 303790-S	303773-S 303779-S 303785-S 303791-S
	5 1/2, 5 3/4, 6, 6 1/2	303792-S 303798-S 303804-S 303810-S	303793-S 303799-S 303805-S 303811-S	301162-S 301163-S 301164-S 301165-S	301130-S 301131-S 301132-S 301133-S	301193-S 301194-S 301195-S 301196-S	300835-S 300836-S 300837-S 300838-S	303794-S 303800-S 303806-S 303812-S	303795-S 303801-S 303807-S 303813-S	301222-S 301223-S 301224-S 301225-S	300847-S 300848-S 300849-S 300850-S	303796-S 303802-S 303808-S 303814-S	303797-S 303803-S 303809-S 303815-S
	7, 7 1/2, 8	303816-S 303822-S 303828-S	303817-S 303823-S 303829-S	301166-S 301167-S 301168-S	301134-S 301135-S 301136-S	301197-S 301198-S 301199-S	300839-S 300840-S 300841-S	303818-S 303824-S 303830-S	303819-S 303825-S 303831-S	301226-S 301227-S 301228-S	300851-S 300852-S 300853-S	303820-S 303826-S 303832-S	303821-S 303827-S 303833-S

NOTES: For General Specifications See Page B-950.01. For Finishes See Addendum.
MATERIAL: M-3500-E Steel.
Point shall be chamfered or rounded at manufacturer's option; the length of point not to exceed pitch of 1-1/2 threads from extreme point to first full thread.

FORD MOTOR COMPANY
STANDARD PARTS

PLOW BOLTS — CLASS 2A

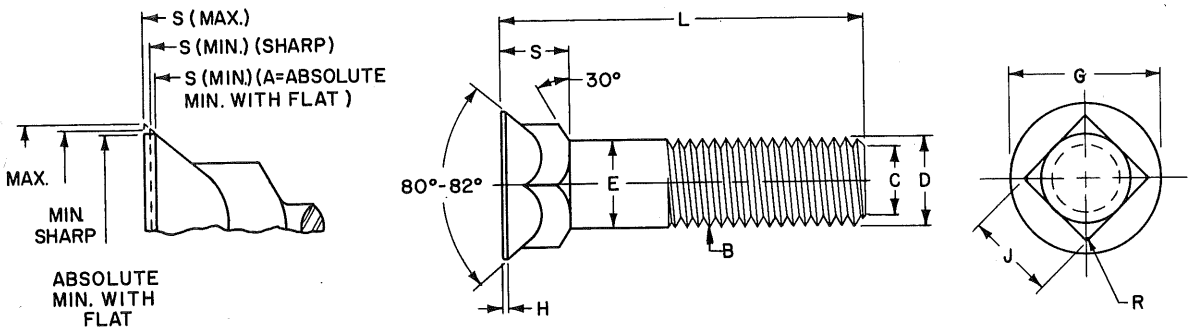

	Diameter Nominal	5/16		3/8		7/16		1/2		5/8		3/4	
E	Diameter Actual	.312-.299		.375-.360		.438-.421		.500-.483		.657-.606		.782-.729	
G	Dia. of Head Min. Sharp Max.	.605		.708		.826		.945		1.147		1.303	
	Abs. Min. with Flat	.578		.671		.781		.890		1.094		1.250	
		.563		.656		.766		.875		1.063		1.219	
H	Feed Thickness Max.	.025		.031		.036		.042		.050		.050	
S	Depth of Square & Head Max.	.269		.312		.364		.417		.506		.541	
	Min.	.243		.281		.328		.375		.456		.491	
J	Width of Square Max.	.325		.387		.450		.515		.640		.765	
	Min.	.313		.375		.438		.500		.625		.750	
R	Radius on Corners of Sq. Max.	1/32		3/64		3/64		3/64		5/64		5/64	
B	Threads per Inch	18	24	16	24	14	20	13	20	11	18	10	16
	Pitch Diameter Plain Max.	.2752	.2843	.3331	.3468	.3897	.4037	.4485	.4662	.5644	.5875	.6832	.7079
	Min.	.2712	.2806	.3287	.3430	.3850	.3995	.4435	.4619	.5589	.5828	.6773	.7029
	Pitch Dia. when Plated Max.	.2764	.2854	.3344	.3479	.3911	.4050	.4500	.4675	.5660	.5889	.6850	.7094
C	Minor Diameter Max.	.2431	.2603	.2970	.3228	.3485	.3749	.4041	.4374	.5119	.5554	.6255	.6718
D	Major Dia. Thread Max.	.3113	.3114	.3737	.3739	.4361	.4362	.4985	.4987	.6234	.6236	.7482	.7485
	Min.	.3026	.3042	.3643	.3667	.4258	.4281	.4876	.4906	.6113	.6149	.7353	.7391
L	See Below	FORD PART NUMBERS											
LENGTH	3/4, 7/8, 1, 1 1/8	301378-S 301379-S 303323-S 303330-S	303315-S 303321-S 303324-S 303331-S	300229-S 303847-S 300114-S 303837-S	303316-S 303322-S 303325-S 303332-S	303317-S 303326-S 300329-S	303318-S 303327-S 303845-S	303319-S 303328-S 303333-S	303320-S 303329-S 303334-S				
	1 1/4, 1 3/8, 1 1/2, 1 5/8	303335-S 303344-S 303354-S 303430-S	303336-S 303345-S 303355-S 303431-S	300458-S 303838-S 303356-S 303432-S	303337-S 303346-S 303357-S 303433-S	303842-S 303843-S 303844-S 303434-S	303846-S 303347-S 303358-S 303435-S	303338-S 303348-S 300308-S 303436-S	303339-S 303349-S 303359-S 303437-S	303340-S 303350-S 303360-S 303438-S	303341-S 303351-S 303361-S 303439-S	303342-S 303352-S 303362-S 303440-S	303343-S 303353-S 303363-S 303441-S
	1 3/4, 1 7/8, 2, 2 1/4	303364-S 303373-S 303385-S 303395-S	303365-S 303374-S 303386-S 303396-S	303839-S 303375-S 303387-S 303397-S	303366-S 303376-S 303388-S 303398-S	300358-S 303377-S 300321-S 303399-S	303848-S 303378-S 303389-S 303400-S	303367-S 303379-S 301401-S 303401-S	303368-S 303380-S 303390-S 303402-S	303369-S 303381-S 303391-S 303403-S	303370-S 303382-S 303392-S 303404-S	303371-S 303383-S 303393-S 303405-S	303372-S 303384-S 303394-S 303406-S
	2 1/2, 2 3/4, 3, 3 1/4	303407-S 303418-S 303442-S 303451-S	303408-S 303419-S 303443-S 303452-S	303409-S 303420-S 303840-S 303453-S	303410-S 303421-S 303444-S 303454-S	300319-S 303422-S 300320-S 303455-S	303411-S 303423-S 303445-S 303456-S	303412-S 303424-S 300315-S 303457-S	303413-S 303425-S 303446-S 303458-S	303414-S 303426-S 303447-S 303459-S	303415-S 303427-S 303448-S 303460-S	303416-S 303428-S 303449-S 303461-S	303417-S 303429-S 303450-S 303462-S
	3 1/2, 3 3/4, 4, 4 1/4	303463-S 303474-S 303486-S 303498-S	303464-S 303475-S 303487-S 303499-S	303841-S 303476-S 303488-S 303500-S	303465-S 303477-S 303489-S 303501-S	303466-S 303478-S 303490-S 303502-S	303467-S 303479-S 303491-S 303503-S	303468-S 303480-S 303492-S 303504-S	303469-S 303481-S 303493-S 303505-S	303470-S 303482-S 303494-S 303506-S	303471-S 303483-S 303495-S 303507-S	303472-S 303484-S 303496-S 303508-S	303473-S 303485-S 303497-S 303509-S
	4 1/2, 4 3/4, 5, 5 1/4	303510-S 303522-S 303534-S 303546-S	303511-S 303523-S 303535-S 303547-S	303512-S 303524-S 303536-S 303548-S	303513-S 303525-S 303537-S 303549-S	303514-S 303526-S 303538-S 303550-S	303515-S 303527-S 303539-S 303551-S	303516-S 303528-S 303540-S 303552-S	303517-S 303529-S 303541-S 303553-S	303518-S 303530-S 303542-S 303554-S	303519-S 303531-S 303543-S 303555-S	303520-S 303532-S 303544-S 303556-S	303521-S 303533-S 303545-S 303557-S
	5 1/2, 5 3/4, 6, 6 1/2	303558-S 303570-S 303582-S 303594-S	303559-S 303571-S 303583-S 303595-S	303560-S 303572-S 303584-S 303596-S	303561-S 303573-S 303585-S 303597-S	303562-S 303574-S 303586-S 303598-S	303563-S 303575-S 303587-S 303599-S	303564-S 303576-S 303588-S 303600-S	303565-S 303577-S 303589-S 303601-S	303566-S 303578-S 303590-S 303602-S	303567-S 303579-S 303591-S 303603-S	303568-S 303580-S 303592-S 303604-S	303569-S 303581-S 303593-S 303834-S
	7, 7 1/2, 8	303605-S 303617-S 303629-S	303606-S 303618-S 303630-S	303607-S 303619-S 303631-S	303608-S 303620-S 303632-S	303609-S 303621-S 303633-S	303610-S 303622-S 303634-S	303611-S 303623-S 303635-S	303612-S 303624-S 303636-S	303613-S 303625-S 303637-S	303614-S 303626-S 303638-S	303615-S 303627-S 303639-S	303616-S 303628-S 303640-S

NOTES: For General Specifications See Page B-950.01. For Finishes See Addendum.
MATERIAL: M-3500-A Steel.
Point shall be chamfered or rounded at manufacturer's option; the length of point not to exceed pitch of 1-1/2 threads from extreme point to first full thread.

FORD MOTOR COMPANY
STANDARD PARTS

SCREW STUDS — FULL DIAMETER BODY

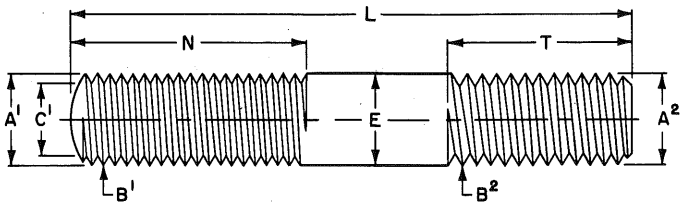

			1/4	5/16	3/8	7/16	1/2
E		Body Diameter	.250 -.246	.3125-.3085	.375 -.371	.4375-.4335	.500 -.496
		Threading Diameter	.217 -.213	.276 -.272	.334 -.330	.391 -.386	.450 -.445
NUT END	B^1	Threads per Inch	28	24	24	20	20
	A^1	Major Diameter Thread	.2500-.2438	.3125-.3059	.3750-.3684	.4375-.4303	.5000-.4928
		Pitch Diameter	.2268-.2246	.2854-.2830	.3479-.3455	.4050-.4024	.4675-.4649
	C^1	Minor Diameter Thread	.2062	.2614	.3239	.3762	.4387
TAP END	B^2	Threads per Inch	20	18	16	14	13
	A^2	Major Diameter Stud	.250 -.245	.3125-.3075	.375 -.370	.4375-.4325	.500 -.495
		Pitch Diameter Stud	.2201-.2184	.2793-.2775	.3374-.3355	.3944-.3924	.4534-.4513
		Pitch Diameter Hole	.2188-.2175	.2779-.2764	.3360-.3344	.3929-.3911	.4519-.4500

L LENGTH	Ford Nos.	N	T	Ford Nos.	N	T	Ford Nos.	N	T	Ford Nos.	N	T	Ford Nos.	N	T
7/8 15/16 1	88350-S	3/8	3/8	88351-S	3/8	3/8									
	88352-S	3/8	3/8	88353-S	3/8	3/8									
	88354-S	7/16	7/16	88355-S	7/16	7/16	88356-S	1/2	1/2	88357-S	1/2	1/2			
1 1/16 1 1/8 1 3/16 1 1/4	88358-S	7/16	7/16	88359-S	7/16	7/16	88360-S	1/2	1/2	88361-S	1/2	1/2			
	88362-S	7/16	7/16	88363-S	7/16	7/16	88364-S	1/2	1/2	88365-S	1/2	1/2			
	88366-S	7/16	7/16	88367-S	7/16	7/16	88368-S	1/2	1/2	88369-S	1/2	1/2			
	88370-S	7/16	7/16	88371-S	7/16	7/16	88372-S	5/8	1/2	88373-S	5/8	1/2	88374-S	5/8	1/2
1 5/16 1 3/8 1 7/16 1 1/2	88375-S	7/16	7/16	88376-S	7/16	7/16	88377-S	5/8	9/16	88378-S	5/8	1/2	88379-S	5/8	1/2
	88380-S	7/16	7/16	88381-S	7/16	7/16	88382-S	5/8	9/16	88383-S	5/8	1/2	88384-S	5/8	1/2
	88385-S	1/2	7/16	88386-S	1/2	7/16	88387-S	5/8	9/16	88388-S	5/8	1/2	88389-S	5/8	1/2
	88390-S	1/2	7/16	88391-S	1/2	7/16	88392-S	5/8	9/16	88393-S	3/4	1/2	88394-S	3/4	5/8
1 9/16 1 5/8 1 11/16 1 3/4	88395-S	1/2	7/16	88396-S	1/2	7/16	88397-S	5/8	9/16	88398-S	3/4	1/2	88399-S	3/4	5/8
	88400-S	1/2	1/2	88401-S	1/2	1/2	88402-S	5/8	5/8	88403-S	3/4	1/2	88404-S	3/4	5/8
	88405-S	1/2	1/2	88406-S	1/2	1/2	88407-S	5/8	5/8	88408-S	3/4	9/16	88409-S	3/4	5/8
	88410-S	1/2	1/2	88411-S	1/2	1/2	88412-S	5/8	5/8	88413-S	3/4	9/16	88414-S	3/4	5/8
1 13/16 1 7/8 1 15/16 2	88415-S	1/2	1/2	88416-S	9/16	1/2	88417-S	5/8	5/8	88418-S	3/4	9/16	88419-S	3/4	5/8
	88420-S	1/2	1/2	88421-S	9/16	1/2	88422-S	5/8	5/8	88423-S	3/4	9/16	88424-S	3/4	5/8
	88425-S	1/2	1/2	88426-S	9/16	1/2	88427-S	5/8	5/8	33428-S	3/4	5/8	88429-S	3/4	5/8
	88430-S	1/2	1/2	88431-S	9/16	1/2	88432-S	3/4	5/8	88433-S	3/4	5/8	88434-S	3/4	5/8
2 1/16 2 1/8 2 3/16 2 1/4	88435-S	9/16	1/2	88436-S	9/16	1/2	88437-S	3/4	5/8	88438-S	3/4	5/8	88439-S	3/4	5/8
	88440-S	9/16	1/2	88441-S	9/16	1/2	88442-S	3/4	5/8	88443-S	3/4	5/8	88444-S	3/4	5/8
	88445-S	9/16	1/2	88446-S	5/8	1/2	88447-S	3/4	5/8	88448-S	3/4	5/8	88449-S	3/4	5/8
	88450-S	9/16	1/2	88451-S	5/8	1/2	88452-S	3/4	5/8	88453-S	3/4	5/8	88454-S	3/4	5/8
2 5/16 2 3/8 2 7/16 2 1/2	88455-S	9/16	1/2	88456-S	5/8	1/2	88457-S	3/4	5/8	88458-S	3/4	5/8	88459-S	3/4	5/8
	88460-S	9/16	1/2	88461-S	5/8	1/2	88462-S	3/4	5/8	88463-S	3/4	5/8	88464-S	3/4	5/8
	88465-S	9/16	1/2	88466-S	5/8	1/2	88467-S	3/4	5/8	88468-S	3/4	5/8	88469-S	3/4	5/8
	88470-S	9/16	1/2	88471-S	5/8	1/2	88472-S	3/4	5/8	88473-S	3/4	5/8	88474-S	3/4	5/8
2 9/16 2 5/8 2 11/16 2 3/4	88475-S	9/16	1/2	88476-S	5/8	1/2	88477-S	3/4	5/8	88478-S	3/4	5/8	88479-S	3/4	5/8
	88480-S	9/16	1/2	88481-S	5/8	1/2	88482-S	3/4	5/8	88483-S	3/4	5/8	88484-S	3/4	5/8
	88485-S	9/16	1/2	88486-S	5/8	1/2	88487-S	3/4	5/8	88488-S	3/4	5/8	88489-S	3/4	5/8
	88490-S	9/16	1/2	88491-S	5/8	1/2	88492-S	3/4	5/8	88493-S	3/4	5/8	88494-S	7/8	3/4
2 13/16 2 7/8 2 15/16 3	88495-S	9/16	1/2	88496-S	5/8	1/2	88497-S	3/4	5/8	88498-S	3/4	5/8	88499-S	7/8	3/4
	88500-S	9/16	1/2	88501-S	5/8	1/2	88502-S	3/4	5/8	88503-S	3/4	5/8	88504-S	7/8	3/4
	88505-S	9/16	1/2	88506-S	5/8	1/2	88507-S	3/4	5/8	88508-S	3/4	5/8	88509-S	7/8	3/4
	88510-S	9/16	1/2	88511-S	5/8	1/2	88512-S	3/4	5/8	88513-S	7/8	5/8	88514-S	7/8	3/4
3 1/16 3 1/8 3 3/16 3 1/4	88515-S	9/16	1/2	88516-S	5/8	1/2	88517-S	3/4	5/8	88518-S	7/8	5/8	88519-S	7/8	3/4
	88520-S	5/8	1/2	88521-S	5/8	1/2	88522-S	3/4	5/8	88523-S	7/8	5/8	88524-S	7/8	3/4
	88525-S	5/8	1/2	88526-S	5/8	1/2	88527-S	3/4	5/8	88528-S	7/8	5/8	88529-S	7/8	3/4
	88530-S	5/8	1/2	88531-S	5/8	1/2	88532-S	3/4	5/8	88533-S	7/8	5/8	88534-S	1	3/4
3 5/16 3 3/8 3 7/16 3 1/2				88535-S	3/4	1/2	88536-S	3/4	5/8	88537-S	7/8	5/8	88538-S	1	3/4
				88539-S	3/4	1/2	88540-S	3/4	5/8	88541-S	7/8	5/8	88542-S	1	3/4
				88543-S	3/4	1/2	88544-S	3/4	5/8	88545-S	7/8	3/4	88546-S	1	3/4
				88547-S	3/4	1/2	88548-S	7/8	5/8	88549-S	7/8	3/4	88550-S	1	3/4

NOTES: For General Specifications See Page B-950.01. For Finishes See Addendum.
MATERIAL: M-3500-C.

FORD MOTOR COMPANY
STANDARD PARTS

SCREW STUDS — FULL DIAMETER BODY

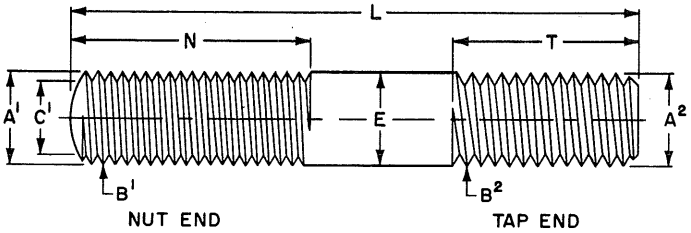

			1/4	5/16	3/8	7/16	1/2
E	Body Diameter		.250 -.246	.3125-.3085	.375 -.371	.4375-.4335	.500 -.496
	Threading Diameter		.217 -.213	.276 -.272	.334 -.330	.391 -.386	.450 -.445
NUT END	B^1	Threads per Inch	28	24	24	20	20
	A^1	Major Diameter Thread	.2500-.2438	.3125-.3059	.3750-.3684	.4375-.4303	.5000-.4928
		Pitch Diameter	.2268-.2246	.2854-.2830	.3479-.3455	.4050-.4024	.4675-.4649
	C^1	Minor Diameter Thread	.2062	.2614	.3239	.3762	.4387
TAP END	B^2	Threads per Inch	20	18	16	14	13
	A^2	Major Diameter Stud	.250 -.245	.3125-.3075	.375 -.370	.4375-.4325	.500 -.495
		Pitch Diameter Stud	.2201-.2184	.2793-.2775	.3374-.3355	.3944-.3924	.4534-.4513
		Pitch Diameter Hole	.2188-.2175	.2779-.2764	.3360-.3344	.3929-.3911	.4519-.4500

L LENGTH	1/4 Ford Nos.	N	T	5/16 Ford Nos.	N	T	3/8 Ford Nos.	N	T	7/16 Ford Nos.	N	T	1/2 Ford Nos.	N	T
3 9/16, 3 5/8, 3 11/16, 3 3/4				88551-S 88555-S 88559-S 88563-S	3/4 3/4 3/4 3/4	1/2 1/2 1/2 1/2	88552-S 88556-S 88560-S 88564-S	7/8 7/8 7/8 7/8	5/8 5/8 5/8 5/8	88553-S 88557-S 88561-S 88565-S	7/8 7/8 7/8 1	3/4 3/4 3/4 3/4	88554-S 88558-S 88562-S 88566-S	1 1 1 1	3/4 3/4 3/4 3/4
3 13/16, 3 7/8, 3 15/16, 4				88567-S 88571-S 88575-S 88579-S	3/4 3/4 3/4 7/8	1/2 1/2 1/2 1/2	88568-S 88572-S 88576-S 88580-S	7/8 7/8 7/8 7/8	5/8 5/8 5/8 11/16	88569-S 88573-S 88577-S 88581-S	1 1 1 1	3/4 3/4 3/4 3/4	88570-S 88574-S 88578-S 88582-S	1 1 1 1 1/4	3/4 3/4 3/4 3/4
4 1/16, 4 1/8, 4 3/16, 4 1/4				88583-S 88587-S 88591-S 88595-S	7/8 7/8 7/8 7/8	1/2 1/2 1/2 1/2	88584-S 88588-S 88592-S 88596-S	7/8 7/8 7/8 1	11/16 11/16 11/16 11/16	88585-S 88589-S 88593-S 88597-S	1 1 1 1	3/4 3/4 3/4 3/4	88586-S 88590-S 88594-S 88598-S	1 1/4 1 1/4 1 1/4 1 1/4	3/4 3/4 3/4 7/8
4 5/16, 4 3/8, 4 7/16, 4 1/2				88599-S 88603-S 88607-S 88611-S	7/8 7/8 7/8 7/8	1/2 1/2 1/2 1/2	88600-S 88604-S 88608-S 88612-S	1 1 1 1	11/16 11/16 11/16 11/16	88601-S 88605-S 88609-S 88613-S	1 1 1 1 1/4	3/4 3/4 3/4 3/4	88602-S 88606-S 88610-S 88614-S	1 1/4 1 1/4 1 1/4 1 1/4	7/8 7/8 7/8 7/8
4 5/8, 4 3/4, 4 7/8, 5				88615-S 88619-S 88623-S 88627-S	7/8 1 1 1	1/2 1/2 1/2 1/2	88616-S 88620-S 88624-S 88628-S	1 1 1 1	11/16 3/4 3/4 3/4	88617-S 88621-S 88625-S 88629-S	1 1/4 1 1/4 1 1/4 1 1/4	3/4 3/4 3/4 3/4	88618-S 88622-S 88626-S 88630-S	1 1/4 1 1/4 1 1/4 1 1/4	7/8 7/8 7/8 7/8
5 1/8, 5 1/4, 5 3/8, 5 1/2										88631-S 88633-S 88635-S 88637-S	1 1/4 1 1/4 1 1/4 1 1/4	3/4 3/4 3/4 3/4	88632-S 88634-S 88636-S 88638-S	1 1/4 1 1/4 1 1/4 1 1/2	7/8 7/8 7/8 7/8
5 5/8, 5 3/4, 5 7/8, 6										88639-S 88641-S 88643-S 88645-S	1 1/4 1 1/4 1 1/4 1 1/2	3/4 3/4 3/4 3/4	88640-S 88642-S 88644-S 88646-S	1 1/2 1 1/2 1 1/2 1 1/2	7/8 7/8 7/8 7/8
6 1/8, 6 1/4, 6 3/8, 6 1/2										88647-S 88649-S 88651-S 88653-S	1 1/2 1 1/2 1 1/2 1 1/2	3/4 3/4 3/4 3/4	88648-S 88650-S 88652-S 88654-S	1 1/2 1 1/2 1 1/2 1 1/2	7/8 7/8 7/8 7/8
6 5/8, 6 3/4, 6 7/8, 7										88655-S 88657-S 88659-S 88661-S	1 1/2 1 1/2 1 1/2 1 1/2	3/4 3/4 3/4 3/4	88656-S 88658-S 88660-S 88662-S	1 1/2 1 1/2 1 1/2 1 1/2	7/8 7/8 7/8 7/8
7 1/8, 7 1/4, 7 3/8, 7 1/2										88663-S 88665-S 88667-S 88669-S	1 1/2 1 1/2 1 1/2 1 1/2	3/4 3/4 3/4 3/4	88664-S 88666-S 88668-S 88670-S	1 1/2 1 1/2 1 1/2 1 1/2	7/8 7/8 7/8 7/8
7 5/8, 7 3/4, 7 7/8, 8													88671-S 88672-S 88673-S 88674-S	1 1/2 1 1/2 1 1/2 1 1/2	7/8 7/8 7/8 7/8

NOTES: For General Specifications See Page B-950.01.. For Finishes See Addendum.
MATERIAL: M-3500-C.

FORD MOTOR COMPANY
STANDARD PARTS

SCREW STUDS

WIRE SIZE BODY

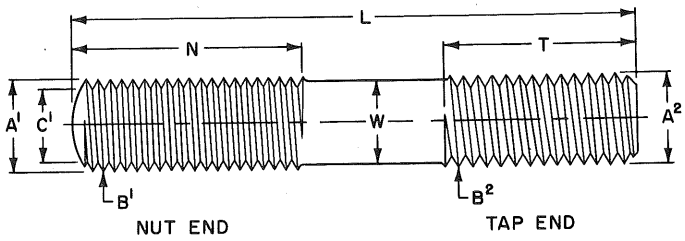

			1/4	5/16	3/8	7/16	1/2
W		Threading Diameter	.217 -.213	.276 -.272	.334 -.330	.391 -.386	.450 -.445
NUT END	B'	Threads per Inch	28	24	24	20	20
	A'	Major Diameter Thread	.2500-.2438	.3125-.3059	.3750-.3684	.4375-.4303	.5000-.4928
		Pitch Diameter	.2268-.2246	.2854-.2830	.3479-.3455	.4050-.4024	.4675-.4649
	C'	Minor Diameter Thread	.2062	.2614	.3239	.3762	.4387
TAP END	B²	Threads per Inch	20	18	16	14	13
	A²	Major Diameter Stud	.250 -.245	.3125-.3075	.375- .370	.4375-.4325	.500 -.495
		Pitch Diameter Stud	.2201-.2184	.2793-.2775	.3374-.3355	.3944-.3924	.4534-.4513
		Pitch Diameter Hole	.2188-.2175	.2779-.2764	.3360-.3344	.3929-.3911	.4519-.4500

L LENGTH	1/4 Ford Nos.	N	T	5/16 Ford Nos.	N	T	3/8 Ford Nos.	N	T	7/16 Ford Nos.	N	T	1/2 Ford Nos.	N	T
7/8, 15/16, 1	89050-S	3/8	3/8	89051-S	3/8	3/8									
	89052-S	3/8	3/8	89053-S	3/8	3/8									
	89054-S	7/16	7/16	89055-S	7/16	7/16	89056-S	1/2	1/2	89057-S	1/2	1/2			
1 1/16, 1 1/8, 1 3/16, 1 1/4	89058-S	7/16	7/16	89059-S	7/16	7/16	89060-S	1/2	1/2	89061-S	1/2	1/2			
	89062-S	7/16	7/16	89063-S	7/16	7/16	89064-S	1/2	1/2	89065-S	1/2	1/2			
	89066-S	7/16	7/16	89067-S	7/16	7/16	89068-S	1/2	1/2	89069-S	1/2	1/2			
	89070-S	7/16	7/16	89071-S	7/16	7/16	89072-S	5/8	1/2	89073-S	5/8	1/2	89074-S	5/8	1/2
1 5/16, 1 3/8, 1 7/16, 1 1/2	89075-S	7/16	7/16	89076-S	7/16	7/16	89077-S	5/8	9/16	89078-S	5/8	1/2	89079-S	5/8	1/2
	89080-S	7/16	7/16	89081-S	7/16	7/16	89082-S	5/8	9/16	89083-S	5/8	1/2	89084-S	5/8	1/2
	89085-S	1/2	7/16	89086-S	1/2	7/16	89087-S	5/8	9/16	89088-S	5/8	1/2	89089-S	5/8	1/2
	89090-S	1/2	7/16	89091-S	1/2	7/16	89092-S	5/8	9/16	89093-S	3/4	1/2	89094-S	3/4	5/8
1 9/16, 1 5/8, 1 11/16, 1 3/4	89095-S	1/2	7/16	89096-S	1/2	7/16	89097-S	5/8	9/16	89098-S	3/4	1/2	89099-S	3/4	5/8
	89100-S	1/2	1/2	89101-S	1/2	1/2	89102-S	5/8	5/8	89103-S	3/4	1/2	89104-S	3/4	5/8
	89105-S	1/2	1/2	89106-S	1/2	1/2	89107-S	5/8	5/8	89108-S	3/4	9/16	89109-S	3/4	5/8
	89110-S	1/2	1/2	89111-S	1/2	1/2	89112-S	5/8	5/8	89113-S	3/4	9/16	89114-S	3/4	5/8
1 13/16, 1 7/8, 1 15/16, 2	89115-S	1/2	1/2	89116-S	9/16	1/2	89117-S	5/8	5/8	89118-S	3/4	9/16	89119-S	3/4	5/8
	89120-S	1/2	1/2	89121-S	9/16	1/2	89122-S	5/8	5/8	89123-S	3/4	9/16	89124-S	3/4	5/8
	89125-S	1/2	1/2	89126-S	9/16	1/2	89127-S	5/8	5/8	89128-S	3/4	5/8	89129-S	3/4	5/8
	89130-S	1/2	1/2	89131-S	9/16	1/2	89132-S	3/4	5/8	89133-S	3/4	5/8	89134-S	3/4	5/8
2 1/16, 2 1/8, 2 3/16, 2 1/4	89135-S	9/16	1/2	89136-S	9/16	1/2	89137-S	3/4	5/8	89138-S	3/4	5/8	89139-S	3/4	5/8
	89140-S	9/16	1/2	89141-S	9/16	1/2	89142-S	3/4	5/8	89143-S	3/4	5/8	89144-S	3/4	5/8
	89145-S	9/16	1/2	89146-S	5/8	1/2	89147-S	3/4	5/8	89148-S	3/4	5/8	89149-S	3/4	5/8
	89150-S	9/16	1/2	89151-S	5/8	1/2	89152-S	3/4	5/8	89153-S	3/4	5/8	89154-S	3/4	5/8
2 5/16, 2 3/8, 2 7/16, 2 1/2	89155-S	9/16	1/2	89156-S	5/8	1/2	89157-S	3/4	5/8	89158-S	3/4	5/8	89159-S	3/4	5/8
	89160-S	9/16	1/2	89161-S	5/8	1/2	89162-S	3/4	5/8	89163-S	3/4	5/8	89164-S	3/4	5/8
	89165-S	9/16	1/2	89166-S	5/8	1/2	89167-S	3/4	5/8	89168-S	3/4	5/8	89169-S	3/4	5/8
	89170-S	9/16	1/2	89171-S	5/8	1/2	89172-S	3/4	5/8	89173-S	3/4	5/8	89174-S	3/4	5/8
2 9/16, 2 5/8, 2 11/16, 2 3/4	89175-S	9/16	1/2	89176-S	5/8	1/2	89177-S	3/4	5/8	89178-S	3/4	5/8	89179-S	3/4	5/8
	89180-S	9/16	1/2	89181-S	5/8	1/2	89182-S	3/4	5/8	89183-S	3/4	5/8	89184-S	3/4	5/8
	89185-S	9/16	1/2	89186-S	5/8	1/2	89187-S	3/4	5/8	89188-S	3/4	5/8	89189-S	3/4	5/8
	89190-S	9/16	1/2	89191-S	5/8	1/2	89192-S	3/4	5/8	89193-S	3/4	5/8	89194-S	7/8	3/4
2 13/16, 2 7/8, 2 15/16, 3	89195-S	9/16	1/2	89196-S	5/8	1/2	89197-S	3/4	5/8	89198-S	3/4	5/8	89199-S	7/8	3/4
	89200-S	9/16	1/2	89201-S	5/8	1/2	89202-S	3/4	5/8	89203-S	3/4	5/8	89204-S	7/8	3/4
	89205-S	9/16	1/2	89206-S	5/8	1/2	89207-S	3/4	5/8	89208-S	3/4	5/8	89209-S	7/8	3/4
	89210-S	9/16	1/2	89211-S	5/8	1/2	89212-S	3/4	5/8	89213-S	7/8	5/8	89214-S	7/8	3/4
3 1/16, 3 1/8, 3 3/16, 3 1/4	89215-S	9/16	1/2	89216-S	5/8	1/2	89217-S	3/4	5/8	89218-S	7/8	5/8	89219-S	7/8	3/4
	89220-S	5/8	1/2	89221-S	5/8	1/2	89222-S	3/4	5/8	89223-S	7/8	5/8	89224-S	7/8	3/4
	89225-S	5/8	1/2	89226-S	5/8	1/2	89227-S	3/4	5/8	89228-S	7/8	5/8	89229-S	7/8	3/4
	89230-S	5/8	1/2	89231-S	5/8	1/2	89232-S	3/4	5/8	89233-S	7/8	5/8	89234-S	1	3/4
3 5/16, 3 3/8, 3 7/16, 3 1/2				89235-S	3/4	1/2	89236-S	3/4	5/8	89237-S	7/8	5/8	89238-S	1	3/4
				89239-S	3/4	1/2	89240-S	3/4	5/8	89241-S	7/8	5/8	89242-S	1	3/4
				89243-S	3/4	1/2	89244-S	3/4	5/8	89245-S	7/8	3/4	89246-S	1	3/4
				89247-S	3/4	1/2	89248-S	7/8	5/8	89249-S	7/8	3/4	89250-S	1	3/4

NOTES: For General Specifications See Page B-950.01. For Finishes See Addendum.
MATERIAL: M-3500-C.

FORD MOTOR COMPANY
STANDARD PARTS

SCREW STUDS — WIRE SIZE BODY

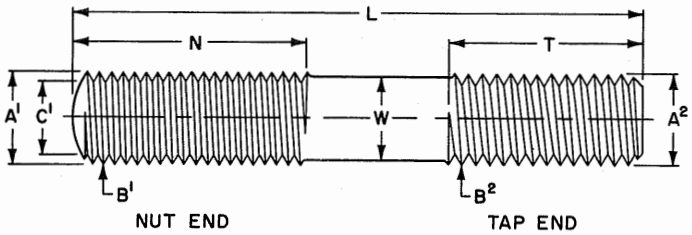

				1/4	5/16	3/8	7/16	1/2
W		Threading Diameter		.217 -.213	.276 -.272	.334 -.330	.391 -.386	.450 -.445
NUT END	B^1	Threads per Inch		28	24	24	20	20
	A^1	Major Diameter Thread		.2500-.2438	.3125-.3059	.3750-.3684	.4375-.4303	.5000-.4928
		Pitch Diameter		.2268-.2246	.2854-.2830	.3479-.3455	.4050-.4024	.4675-.4649
	C^1	Minor Diameter Thread		.2062	.2614	.3239	.3762	.4387
TAP END	B^2	Threads per Inch		20	18	16	14	13
	A^2	Major Diameter	Stud	.250 -.245	.3125-.3075	.375 -.370	.4375-.4325	.500 -.495
		Pitch Diameter	Stud	.2201-.2184	.2793-.2775	.3374-.3355	.3944-.3924	.4534-.4513
		Pitch Diameter	Hole	.2188-.2175	.2779-.2764	.3360-.3344	.3929-.3911	.4519-.4500

L LENGTH	1/4 Ford Nos.	N	T	5/16 Ford Nos.	N	T	3/8 Ford Nos.	N	T	7/16 Ford Nos.	N	T	1/2 Ford Nos.	N	T
3 9/16, 3 5/8, 3 11/16, 3 3/4				89251-S	3/4	1/2	89252-S	7/8	5/8	89253-S	7/8	3/4	89254-S	1	3/4
				89255-S	3/4	1/2	89256-S	7/8	5/8	89257-S	7/8	3/4	89258-S	1	3/4
				89259-S	3/4	1/2	89260-S	7/8	5/8	89261-S	7/8	3/4	89262-S	1	3/4
				89263-S	3/4	1/2	89264-S	7/8	5/8	89265-S	1	3/4	89266-S	1	3/4
3 13/16, 3 7/8, 3 15/16, 4				89267-S	3/4	1/2	89268-S	7/8	5/8	89269-S	1	3/4	89270-S	1	3/4
				89271-S	3/4	1/2	89272-S	7/8	5/8	89273-S	1	3/4	89274-S	1	3/4
				89275-S	3/4	1/2	89276-S	7/8	5/8	89277-S	1	3/4	89278-S	1	3/4
				89279-S	7/8	1/2	89280-S	7/8	11/16	89281-S	1	3/4	89282-S	1 1/4	3/4
4 1/16, 4 1/8, 4 3/16, 4 1/4				89283-S	7/8	1/2	89284-S	7/8	11/16	89285-S	1	3/4	89286-S	1 1/4	3/4
				89287-S	7/8	1/2	89288-S	7/8	11/16	89289-S	1	3/4	89290-S	1 1/4	3/4
				89291-S	7/8	1/2	89292-S	7/8	11/16	89293-S	1	3/4	89294-S	1 1/4	3/4
				89295-S	7/8	1/2	89296-S	1	11/16	89297-S	1	3/4	89298-S	1 1/4	7/8
4 5/16, 4 3/8, 4 7/16, 4 1/2				89299-S	7/8	1/2	89300-S	1	11/16	89301-S	1	3/4	89302-S	1 1/4	7/8
				89303-S	7/8	1/2	89304-S	1	11/16	89305-S	1	3/4	89306-S	1 1/4	7/8
				89307-S	7/8	1/2	89308-S	1	11/16	89309-S	1	3/4	89310-S	1 1/4	7/8
				89311-S	7/8	1/2	89312-S	1	11/16	89313-S	1 1/4	3/4	89314-S	1 1/4	7/8
4 5/8, 4 3/4, 4 7/8, 5				89315-S	7/8	1/2	89316-S	1	11/16	89317-S	1 1/4	3/4	89318-S	1 1/4	7/8
				89319-S	1	1/2	89320-S	1	3/4	89321-S	1 1/4	3/4	89322-S	1 1/4	7/8
				89323-S	1	1/2	89324-S	1	3/4	89325-S	1 1/4	3/4	89326-S	1 1/4	7/8
				89327-S	1	1/2	89328-S	1	3/4	89329-S	1 1/4	3/4	89330-S	1 1/4	7/8
5 1/8, 5 1/4, 5 3/8, 5 1/2										89331-S	1 1/4	3/4	89332-S	1 1/4	7/8
										89333-S	1 1/4	3/4	89334-S	1 1/4	7/8
										89335-S	1 1/4	3/4	89336-S	1 1/4	7/8
										89337-S	1 1/4	3/4	89338-S	1 1/2	7/8
5 5/8, 5 3/4, 5 7/8, 6										89339-S	1 1/4	3/4	89340-S	1 1/2	7/8
										89341-S	1 1/4	3/4	89342-S	1 1/2	7/8
										89343-S	1 1/4	3/4	89344-S	1 1/2	7/8
										89345-S	1 1/2	3/4	89346-S	1 1/2	7/8
6 1/8, 6 1/4, 6 3/8, 6 1/2										89347-S	1 1/2	3/4	89348-S	1 1/2	7/8
										89349-S	1 1/2	3/4	89350-S	1 1/2	7/8
										89351-S	1 1/2	3/4	89352-S	1 1/2	7/8
										89353-S	1 1/2	3/4	89354-S	1 1/2	7/8
6 5/8, 6 3/4, 6 7/8, 7										89355-S	1 1/2	3/4	89356-S	1 1/2	7/8
										89357-S	1 1/2	3/4	89358-S	1 1/2	7/8
										89359-S	1 1/2	3/4	89360-S	1 1/2	7/8
										89361-S	1 1/2	3/4	89362-S	1 1/2	7/8
7 1/8, 7 1/4, 7 3/8, 7 1/2										89363-S	1 1/2	3/4	89364-S	1 1/2	7/8
										89365-S	1 1/2	3/4	89366-S	1 1/2	7/8
										89367-S	1 1/2	3/4	89368-S	1 1/2	7/8
										89369-S	1 1/2	3/4	89370-S	1 1/2	7/8
7 5/8, 7 3/4, 7 7/8, 8													89371-S	1 1/2	7/8
													89372-S	1 1/2	7/8
													89373-S	1 1/2	7/8
													89374-S	1 1/2	7/8

NOTES: For General Specifications See Page B-950.01. For Finishes See Addendum.
MATERIAL: M-3500-C.

FORD MOTOR COMPANY
STANDARD PARTS

LAG BOLTS

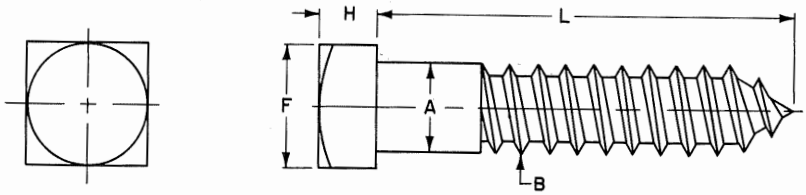

A	Body Diameter	1/4	5/16	3/8	1/2	5/8	3/4	7/8	1
B	Threads per Inch	10	9	7	6	5	4 1/2	4	3 1/2
H	Head Thickness	.188 .156	.220 .186	.268 .232	.348 .308	.444 .400	.524 .476	.620 .568	.684 .628
F	Head Width	.375 .362	.500 .484	.562 .544	.750 .725	.938 .906	1.125 1.088	1.312 1.269	1.500 1.450
L	LENGTH			FORD PART NUMBERS					
	1 1¼ 1½	33550-S 33556-S 33562-S	33551-S 33557-S 33563-S	33552-S 33558-S 33564-S	33553-S 33559-S 33565-S	33554-S 33560-S 33566-S	33555-S 33561-S 33567-S		
	1¾ 2 2¼ 2½	33568-S 33574-S 33582 S 33590-S	33569-S 33575-S 33583-S 33591-S	33570-S 33576-S 33584-S 33592-S	33571-S 33577-S 33585-S 33593-S	33572-S 33578-S 33586-S 33594-S	33573-S 33579-S 33587-S 33595-S	33580-S 33588-S 33596-S	33581-S 33589-S 33597-S
	2¾ 3 3½ 4	33598-S 33606-S 33614-S 33622-S	33599-S 33607-S 33615-S 33623-S	33600-S 33608-S 33616-S 33624-S	33601-S 33609-S 33617-S 33625-S	33602-S 33610-S 33618-S 33626-S	33603-S 33611-S 33619-S 33627-S	33604-S 33612-S 33620-S 33628-S	33605-S 33613-S 33621-S 33629-S
	4½ 5 5½ 6	33630-S 33638-S 33646-S 33654-S	33631-S 33639-S 33647-S 33655-S	33632-S 33640-S 33648-S 33656-S	33633-S 33641-S 33649-S 33657-S	33634-S 33642-S 33650-S 33658-S	33635-S 33643-S 33651-S 33659-S	33636-S 33644-S 33652-S 33660-S	33637-S 33645-S 33653-S 33661-S
	6½ 7 7½ 8	33662-S 33670-S 33678-S 33686-S	33663-S 33671-S 33679-S 33687-S	33664-S 33672-S 33680-S 33688-S	33665-S 33673-S 33681-S 33689-S	33666-S 33674-S 33682-S 33690-S	33667-S 33675-S 33683-S 33691-S	33668-S 33676-S 33684-S 33692-S	33669-S 33677-S 33685-S 33693-S
	8½ 9 9½ 10	33694-S	33695-S 33702-S 33709-S 33716-S	33696-S 33703-S 33710-S 33717-S	33697-S 33704-S 33711-S 33718-S	33698-S 33705-S 33712-S 33719-S	33699-S 33706-S 33713-S 33720-S	33700-S 33707-S 33714-S 33721-S	33701-S 33708-S 33715-S 33722-S
	10½ 11 11½ 12		33723-S	33724-S 33730-S 33736-S 33742-S	33725-S 33731-S 33737-S 33743-S	33726-S 33732-S 33738-S 33744-S	33727-S 33733-S 33739-S 33745-S	33728-S 33734-S 33740-S 33746-S	33729-S 33735-S 33741-S 33747-S
	12½ 13 13½ 14			33748-S	33749-S 33754-S 33759-S 33764-S	33750-S 33755-S 33760-S 33765-S	33751-S 33756-S 33761-S 33766-S	33752-S 33757-S 33762-S 33767-S	33753-S 33758-S 33763-S 33768-S

NOTES: For General Specifications see page B-950.01. For Finishes see Addendum.
MATERIAL: SAE 1018 -- Stress annealed after heading.
Flat at root = Pitch x 0.4305.
Depth of single thread = Pitch x 0.385.
Minimum thread length, equals 1/2 of the length plus 1/2 inch. Bolts too short for formula thread length shall be threaded as close to the head or shoulder as practical.
Tolerance for length of bolt shall be plus or minus 1/8 inch for bolts 1/2 x 6 inches and smaller and plus or minus 1/4 inch for larger and longer bolts.

GENERAL SPECIFICATIONS

MATERIAL: Refer to Material Specifications.

THREAD DATA is based on Unified and American Screw Thread ASA B1.1-1949.

HEXAGON BOLT in this section is described as a Finished Hexagon Bolt of the American Standard B18.2.

TAPER OF HEAD (angle between one side and axis) shall not exceed 2 degrees specified width across flats being the largest dimension.

TOP OF HEAD shall be flat and chamfered. Diameter of top circle shall be maximum width across flats within a tolerance of minus 15 per cent.

BEARING SURFACE shall be flat and either washer faced approximately 1/64 inch included in head height or with chamfered corners. Diameter of bearing surface shall be 95 per cent of maximum width across flats within a tolerance of plus or minus 5 per cent.

BEARING SURFACE shall be at right angles to axis of body within a tolerance of 2 degrees for hexagon and 3 degrees for square head bolts for sizes up to and including 1 inch and within a tolerance of 1 degree for hexagon and 2 degrees for square head bolts, for sizes larger than 1 inch. The bearing surface shall be concentric with axis of body within a tolerance of 3 per cent of the maximum width across flats.

MINIMUM THREAD LENGTH shall be twice the diameter plus 1/4 inch for lengths up to and including 6 inches, twice the diameter plus 1/2 inch for lengths over 6 inches. The tolerance shall be plus 3/16 inch or 2-1/2 threads, whichever is greater. On hexagon bolts that are too short for minimum thread lengths, the distance from the bearing surface of the head to the first complete thread shall not exceed the length of 2-1/2 threads as measured with a ring thread gage, for sizes up to and including 1 inch and 3-1/2 threads for sizes larger than 1 inch. Square and round head bolts too short for the formula thread length shall be threaded as close to the head or neck as practical.

TOLERANCE ON BOLT LENGTH for hexagon bolts for sizes up to and including 3/4 inch shall be; minus 1/32 inch for lengths up to and including 1 inch; minus 1/16 inch for lengths over 1 inch to and including 2 inches; minus 3/32 inch for lengths over 2 inches to and including 6 inches, and minus 3/16 inch for lengths over 6 inches. Tolerances for sizes over 3/4 inch shall be minus 1/16 inch for lengths up to and including 1 inch; minus 1/8 inch for lengths over 1 inch to and including 2 inches and minus 3/16 inch for lengths over 2 inches.

GENERAL SPECIFICATIONS

TOTAL RUNOUT (eccentricity and angularity) of thread in relation of body for sizes up to and including 3/4 inch shall not exceed 0.010 inches for each inch of length when measured in a sleeve gage; the deviation of shank from a surface plate on which it is rolled shall not exceed 0.0312 inch.

TOLERANCE ON BOLT LENGTH for square and round head bolts 6 inches and under in length shall be plus or minus 1/32 inch for sizes 1/4 to 3/8 inch, plus or minus 1/16 inch for sizes 7/16 and 1/2 inch, plus or minus 1/8 inch for sizes 5/8 to 1-1/4 inch. Length tolerance for bolts over 6 inches in length shall be plus or minus 1/16 inch for sizes 1/4 to 3/8 inch, plus or minus 3/32 inch for sizes 7/16 and 1/2 inch, plus or minus 3/16 inch for sizes 5/8 to 1-1/4 inch.

MAXIMUM RADIUS OF FILLET under round head bolt head for sizes #10 to 1/2 inch inclusive, is 1/32 inch and for sizes 5/8 to 1 inch inclusive is 1/16 inch.

In sizes 1/4 to 1 inch a tolerance of minus 0.050 times diameter may be used when the product is hot made.

When plating is specified the thickness or quality shall be measured or tested on the side of the bolt head.

STUDS: Point on the nut end shall be flat and chamfered or rounded (oval) at the option of the manufacturer.

All dimensions are in inches and apply to the finished product.

LIMITS: Allowable variation on dimensions controlling finished surfaces is plus or minus .010 inches unless otherwise specified.

DEFECTS: Bolts shall be free from burrs, seams, laps, loose scale, irregular surfaces, sharp edges, etc., that affect serviceability.

NOTES: The specifications in this section were developed without considering whether patents may or may not be involved. In all cases, therefore, the supplier shall be required to assume patent liability.

FORD MOTOR COMPANY
STANDARD PARTS

SECTION C
SCREWS

FORD MOTOR COMPANY
STANDARD PARTS

MACHINE SCREWS
FILLISTER HEAD

SLOTTED
CLASS 2A

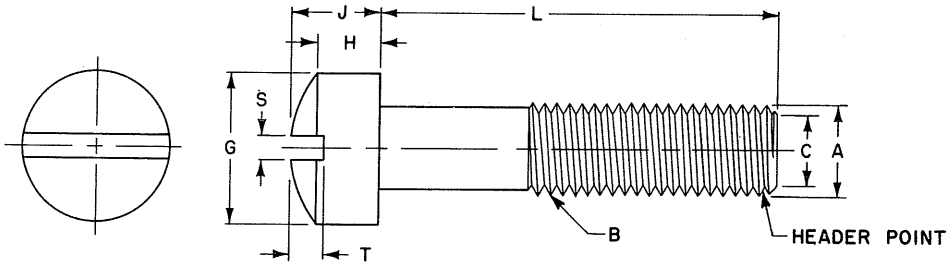

	Screw Size	4	6	8	10		12	1/4		5/16		3/8	
B	Threads Per Inch	40	32	32	24	32	24	20	28	18	24	16	24
A	Major Dia of Thread	.1112 .1061	.1372 .1312	.1631 .1571	.1890 .1818	.1891 .1831	.2150 .2078	.2489 .2408	.2490 .2425	.3113 .3026	.3114 .3042	.3737 .3643	.3739 .3667
	Pitch Dia of Thread	.0950 .0925	.1169 .1141	.1428 .1399	.1619 .1586	.1688 .1658	.1879 .1845	.2164 .2127	.2258 .2225	.2752 .2712	.2843 .2806	.3331 .3287	.3468 .3430
	Pitch Dia of Thread When Plated (Max.)	.0958	.1117	.1437	.1629	.1697	.1889	.2175	.2268	.2764	.2854	.3344	.3479
C	Minor Dia of Thread (Max)	.0805	.0989	.1248	.1379	.1508	.1639	.1876	.2052	.2431	.2603	.2970	.3228
G	Head Diameter	.183 .166	.226 .208	.270 .250	.313 .292	.313 .292	.357 .334	.414 .389	.414 .389	.518 .490	.518 .490	.622 .590	.622 .590
H	Side Height	.079 .069	.096 .086	.113 .102	.130 .118	.130 .118	.148 .134	.170 .155	.170 .155	.211 .194	.211 .194	.253 .233	.253 .233
J	Total Head Height	.107 .088	.132 .111	.156 .133	.180 .156	.180 .156	.205 .178	.237 .207	.237 .207	.295 .262	.295 .262	.355 .315	.355 .315
S	Slot Width	.039 .031	.048 .039	.054 .045	.060 .050	.060 .050	.067 .056	.075 .064	.075 .064	.084 .072	.084 .072	.094 .081	.094 .081
T	Slot Depth	.048 .035	.060 .045	.071 .054	.083 .064	.083 .064	.094 .074	.109 .087	.109 .087	.137 .110	.137 .110	.164 .133	.164 .133
	MATERIAL	Steel M 3422-A					FORD PART NUMBERS						
L	3/16 1/4 5/16 3/8	37598-S 37609-S 37620-S 37631-S	37599-S 37610-S 37621-S 37632-S	37600-S 37611-S 37622-S 37633-S	54227-S 54228-S 54229-S 54230-S	37601-S 37612-S 37623-S 37634-S	37602-S 37213-S 37624-S 37635-S	37603-S 37614-S 37625-S 37636-S	37604-S 37615-S 37626-S 37637-S	37605-S 37616-S 37627-S 37638-S	37606-S 37617-S 37628-S 37639-S	37607-S 37618-S 37629-S 37640-S	37608-S 37619-S 37630-S 37641-S
	7/16 1/2 9/16 5/8	37642-S 37653-S 37664-S 37675-S	37643-S 37654-S 37665-S 37676-S	37644-S 37655-S 37666-S 37677-S	54231-S 54232-S 54233-S 54234-S	37645-S 37656-S 37667-S 37678-S	37646-S 37657-S 37668-S 37679-S	37647-S 37658-S 37669-S 37680-S	37648-S 37659-S 37670-S 37681-S	37649-S 37660-S 37671-S 37682-S	37650-S 37661-S 37672-S 37683-S	37651-S 37662-S 37673-S 37684-S	37652-S 37663-S 37674-S 37685-S
L	11/16 3/4 7/8 1	37686-S 37697-S 37719-S 37741-S	37687-S 37698-S 37720-S 37742-S	37688-S 37699-S 37721-S 37743-S	54235-S 54236-S 54237-S 54238-S	37689-S 37700-S 37722-S 37744-S	37690-S 37701-S 37723-S 37745-S	37691-S 37702-S 37724-S 37746-S	37692-S 37703-S 37725-S 37747-S	37693-S 37704-S 37726-S 37748-S	37694-S 37705-S 37727-S 37749-S	37695-S 37706-S 37728-S 37750-S	37696-S 37707-S 37729-S 37751-S
E	1 1/8 1 1/4 1 3/8 1 1/2	37752-S 37763-S 37774-S 37785-S	37753-S 37764-S 37775-S 37786-S	37754-S 37765-S 37776-S 37787-S	54239-S 54240-S 54241-S 54242-S	37755-S 37766-S 37777-S 37788-S	37756-S 37767-S 37778-S 37789-S	37757-S 37768-S 37779-S 37790-S	37758-S 37769-S 37780-S 37791-S	37759-S 37770-S 37781-S 37792-S	37760-S 37771-S 37782-S 37793-S	37761-S 37772-S 37783-S 37794-S	37762-S 37773-S 37784-S 37795-S
N	1 5/8 1 3/4 1 7/8 2	37796-S 37807-S 37818-S 37829-S	37797-S 37808-S 37819-S 37830-S	37798-S 37809-S 37820-S 37831-S	54243-S 54244-S 54245-S 54246-S	37799-S 37810-S 37821-S 37832-S	37800-S 37811-S 37822-S 37833-S	37801-S 37812-S 37823-S 37834-S	37802-S 37813-S 37824-S 37835-S	37803-S 37814-S 37825-S 37836-S	37804-S 37815-S 37826-S 37837-S	37805-S 37816-S 37827-S 37838-S	37806-S 37817-S 37828-S 37839-S
G	2 1/8 2 1/4 2 3/8 2 1/2	37840-S 37851-S 37862-S 37873-S	37841-S 37852-S 37863-S 37874-S	37842-S 37853-S 37864-S 37875-S	54247-S 54248-S 54249-S 54250-S	37843-S 37854-S 37865-S 37876-S	37844-S 37855-S 37866-S 37877-S	37845-S 37856-S 37867-S 37878-S	37846-S 37857-S 37868-S 37879-S	37847-S 37858-S 37869-S 37880-S	37848-S 37859-S 37870-S 37881-S	37849-S 37860-S 37871-S 37882-S	37850-S 37861-S 37872-S 37883-S
T	2 5/8 2 3/4 2 7/8 3 3 1/4	37884-S 37895-S 37906-S 37917-S 37928-S	37885-S 37896-S 37907-S 37918-S 37929-S	37886-S 37897-S 37908-S 37919-S 37930-S	54251-S 54252-S 54253-S 54254-S 54255-S	37887-S 37898-S 37909-S 37920-S 37931-S	37888-S 37899-S 37910-S 37921-S 37932-S	37889-S 37900-S 37911-S 37922-S 37933-S	37890-S 37901-S 37912-S 37923-S 37934-S	37891-S 37902-S 37913-S 37924-S 37935-S	37892-S 37903-S 37914-S 37925-S 37936-S	37893-S 37904-S 37915-S 37926-S 37937-S	37894-S 37905-S 37916-S 37927-S 37938-S
	MATERIAL	Brass SAE 80-B					FORD PART NUMBERS						
L	3/16 1/4	37994-S 38005-S	37995-S 38006-S	37996-S 38007-S	54256-S 54257-S	37997-S 38008-S	37998-S 38009-S	37999-S 38010-S	38000-S 38011-S	38001-S 38012-S	38002-S 38013-S	38003-S 38014-S	38004-S 38015-S
L	5/16 3/8 7/16 1/2	38016-S 38027-S 38038-S 38049-S	38017-S 38028-S 38039-S 38050-S	38018-S 38029-S 38040-S 38051-S	54258-S 54259-S 54260-S 54261-S	38019-S 38030-S 38041-S 38052-S	38020-S 38031-S 38042-S 38053-S	38021-S 38032-S 38043-S 38054-S	38022-S 38033-S 38044-S 38055-S	38023-S 38034-S 38045-S 38056-S	38024-S 38035-S 38046-S 38057-S	38025-S 38036-S 38047-S 38058-S	38026-S 38037-S 38048-S 38059-S
E	9/16 5/8 11/16 3/4	38060-S 38071-S 38082-S 38093-S	38061-S 38072-S 38083-S 38094-S	38062-S 38073-S 38084-S 38095-S	54262-S 54263-S 54264-S 54265-S	38063-S 38074-S 38085-S 38096-S	38064-S 38075-S 38086-S 38097-S	38065-S 38076-S 38087-S 38098-S	38066-S 38077-S 38088-S 38099-S	38067-S 38078-S 38089-S 38100-S	38068-S 38079-S 38090-S 38101-S	38069-S 38080-S 38091-S 38102-S	38070-S 38081-S 38092-S 38103-S
N	7/8 1 1 1/8 1 1/4	38115-S 38137-S 38148-S 38159-S	38116-S 38138-S 38149-S 38160-S	38117-S 38139-S 38150-S 38161-S	54266-S 54267-S 54268-S 54269-S	38118-S 38140-S 38151-S 38162-S	38119-S 38141-S 38152-S 38163-S	38120-S 38142-S 38153-S 38164-S	38121-S 38143-S 38154-S 38165-S	38122-S 38144-S 38155-S 38166-S	38123-S 38145-S 38156-S 38167-S	38124-S 38146-S 38157-S 38168-S	38125-S 38147-S 38158-S 38169-S

NOTES: For General Specifications see Page C-950.01. For Finishes see Section "Z" Addendum.
For Header Point Specifications see General Specifications.

FORD MOTOR COMPANY
STANDARD PARTS

SCREW & SPRING LOCK WASHER ASSEMBLIES
FILLISTER HEAD

SLOTTED
CLASS 2A

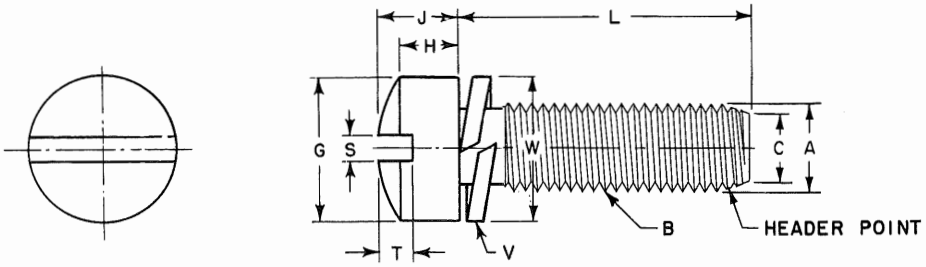

	Screw Size	6	8	10		12	1/4		5/16	
B	Threads Per Inch	32	32	24	32	24	20	28	18	24
A	Major Dia of Thread	.1372 .1312	.1631 .1571	.1890 .1818	.1891 .1831	.2150 .2078	.2489 .2408	.2490 .2425	.3113 .3026	.3114 .3042
	Pitch Dia of Thread	.1169 .1141	.1428 .1399	.1619 .1586	.1688 .1658	.1879 .1845	.2164 .2127	.2258 .2225	.2752 .2712	.2843 .2806
	Pitch Dia of Thread When Plated (Max.)	.1177	.1437	.1629	.1697	.1889	.2175	.2268	.2764	.2854
C	Minor Dia of Thread (Max.)	.0989	.1248	.1379	.1508	.1639	.1876	.2052	.2431	.2603
G	Head Diameter	.226 .208	.270 .250	.313 .292	.313 .292	.357 .334	.414 .389	.414 .389	.518 .490	.518 .490
H	Side Height	.096 .086	.113 .102	.130 .118	.130 .118	.148 .134	.170 .155	.170 .155	.211 .194	.211 .194
J	Total Head Height	.132 .111	.156 .133	.180 .156	.180 .156	.205 .178	.237 .207	.237 .207	.295 .262	.295 .262
S	Slot Width	.048 .039	.054 .045	.060 .050	.060 .050	.067 .056	.075 .064	.075 .064	.084 .072	.084 .072
T	Slot Depth	.060 .045	.071 .054	.083 .064	.083 .063	.094 .074	.109 .087	.109 .087	.137 .110	.137 .110
W	Washer Diameter	.231 .218	.257 .243	.297 .283	.297 .283	.335 .320	.400 .384	.400 .384	.524 .508	.524 .508
V	Washer Thickness (Min.)	.031	.031	.040	.040	.047	.063	.063	.062	.062
	MATERIAL	See Notes				FORD PART NUMBERS				
L	1/4	43244-S	43245-S	54427-S	43246-S	43383-S				
LENGTH	3/8 1/2 5/8 3/4	43247-S 43250-S 43254-S 43394-S	43248-S 43251-S 43255-S 43395-S	54428-S 54429-S 54430-S 54431-S	43249-S 43252-S 43256-S 43396-S	43384-S 43253-S 43368-S 43365-S	43385-S 43387-S 43390-S 43397-S	43386-S 43388-S 43391-S 43364-S	43366-S 43392-S 43398-S	43389-S 43393-S 43399-S
	7/8 1 1 1/8 1 1/4	43400-S 43406-S	43257-S 43407-S	54432-S 54433-S 54434-S 54435-S	43401-S 43408-S 43414-S 43420-S	43402-S 43409-S 43415-S 43421-S	43403-S 43410-S 43416-S 43422-S	43404-S 43411-S 43417-S 43423-S	43405-S 43412-S 43418-S 43424-S	43262-S 43413-S 43419-S 43425-S

NOTES: For General Specifications see Page C-950.01.. For Finishes see Section "Z" Addendum.
MATERIAL: Screw - Steel; M-3422-A. Washer - Steel; SAE 1060, SAE 1065 or SAE 1070, heat treated to Rockwell C45 to C53.
For Header Point Specifications see General Specifications.

FORD MOTOR COMPANY
STANDARD PARTS

SCREW & INTERNAL TOOTH WASHER ASSEMBLIES
FILLISTER HEAD

SLOTTED
CLASS 2A

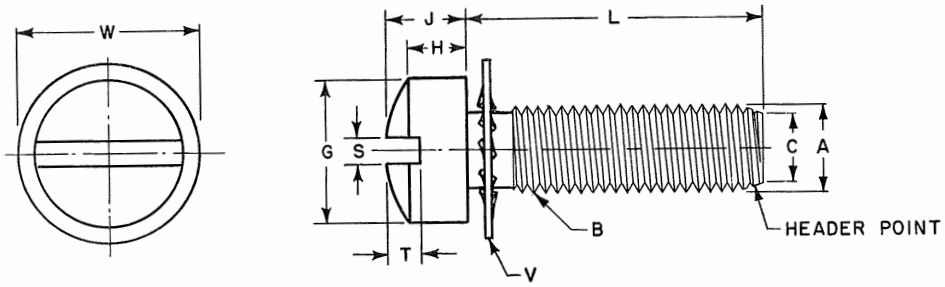

	Screw Size	6	8	10		12	1/4		5/16	
B	Threads Per Inch	32	32	24	32	24	20	28	18	24
A	Major Dia of Thread	.1372 .1312	.1631 .1571	.1890 .1818	.1891 .1831	.2150 .2078	.2489 .2408	.2490 .2425	.3113 .3026	.3114 .3042
	Pitch Dia of Thread	.1169 .1141	.1428 .1399	.1619 .1586	.1688 .1658	.1879 .1845	.2164 .2127	.2258 .2225	.2752 .2712	.2843 .2806
	Pitch Dia of Thread When Plated (Max.)	.1177	.1437	.1629	.1697	.1889	.2175	.2268	.2764	.2854
C	Minor Dia of Thread (Max.)	.0989	.1248	.1379	.1508	.1639	.1876	.2052	.2431	.2603
G	Head Diameter	.226 .208	.270 .250	.313 .292	.313 .292	.357 .334	.414 .389	.414 .389	.518 .490	.518 .490
H	Side Height	.096 .086	.113 .102	.130 .118	.130 .118	.148 .134	.170 .155	.170 .155	.211 .194	.211 .194
J	Total Head Height	.132 .111	.156 .133	.180 .156	.180 .156	.205 .178	.237 .207	.237 .207	.295 .262	.295 .262
S	Slot Width	.048 .039	.054 .045	.060 .050	.060 .050	.067 .056	.075 .064	.075 .064	.084 .072	.084 .072
T	Slot Depth	.060 .045	.071 .054	.083 .064	.083 .064	.094 .074	.109 .087	.109 .087	.137 .110	.137 .110
W	Washer Diameter	.288 .278	.338 .327	.383 .372	.383 .372	.408 .396	.478 .466	.478 .466	.610 .597	.610 .597
V	Washer Thickness	.021 .017	.023 .018	.025 .020	.025 .020	.025 .020	.028 .023	.028 .023	.034 .028	.034 .028
	MATERIAL	See Notes				FORD PART NUMBERS				
L	1/4	42660-S	42665-S	54579-S	43367-S					
LENGTH	3/8 1/2 5/8 3/4	42661-S 42662-S 42663-S 42664-S	42666-S 42667-S 42668-S 42669-S	54580-S 54581-S 54582-S 54583-S	42672-S 42673-S 42674-S 42675-S	42678-S 42679-S 42680-S 42681-S	42685-S 42686-S 42687-S 42688-S	42693-S 42694-S 42695-S 42696-S	42701-S 42702-S 42703-S 42704-S	42709-S 42710-S 42711-S 42712-S
	7/8 1 1 1/8 1 1/4		42670-S 42671-S 43258-S	54584-S 54585-S	42676-S 42677-S	42682-S 42683-S 42684-S	42689-S 42690-S 42691-S 42692-S	42697-S 42698-S 42699-S 42700-S	42705-S 42706-S 42707-S 42708-S	42713-S 42714-S 42715-S 42716-S

NOTES: For General Specifications see Page C-950.01. For Finishes see Section "Z" Addendum.
MATERIAL: Screw - Steel; M-3422-A. Washer - Steel; SAE 1050, SAE 1060 or SAE 1065, heat treated to Rockwell C40 to C50.
For Header Point Specifications see General Specifications.

FORD MOTOR COMPANY
STANDARD PARTS

SCREW & INTERNAL TOOTH WASHER ASSEMBLIES
FILLISTER HEAD

CROSS RECESSED
CLASS 2A

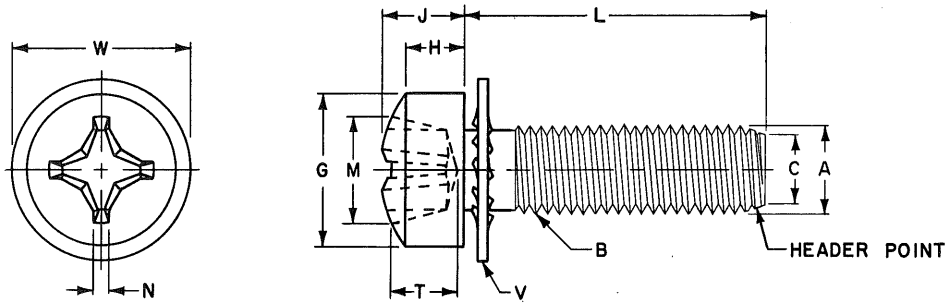

	Screw Size	6	8	10		12	1/4		5/16	
B	Threads Per Inch	32	32	24	32	24	20	28	18	24
A	Major Dia of Thread	.1372 .1312	.1631 .1571	.1890 .1818	.1891 .1831	.2150 .2078	.2489 .2408	.2490 .2425	.3113 .3026	.3114 .3042
	Pitch Dia of Thread	.1169 .1141	.1428 .1399	.1619 .1586	.1688 .1658	.1879 .1845	.2164 .2127	.2258 .2225	.2752 .2712	.2843 .2806
	Pitch Dia of Thread When Plated (Max.)	.1177	.1437	.1629	.1697	.1889	.2175	.2268	.2764	.2854
C	Minor Dia of Thread (Max.)	.0989	.1248	.1379	.1508	.1639	.1876	.2052	.2431	.2603
G	Head Diameter	.226 .208	.270 .250	.313 .292	.313 .292	.357 .334	.414 .389	.414 .389	.518 .490	.518 .490
H	Side Height	.096 .086	.113 .102	.130 .118	.130 .118	.148 .134	.170 .155	.170 .155	.211 .194	.211 .194
J	Total Head Height	.132 .111	.156 .133	.180 .156	.180 .156	.205 .178	.237 .207	.237 .207	.295 .262	.295 .262
M	Recess Diameter	.166 .153	.182 .169	.199 .186	.199 .186	.259 .246	.281 .268	.281 .268	.322 .309	.322 .309
T	Recess Depth	.091 .066	.108 .082	.124 .100	.124 .100	.141 .115	.161 .135	.161 .135	.235 .209	.235 .209
N	Recess Width (Min.)	.028	.030	.031	.031	.034	.036	.036	.042	.042
	Driver Size	2	2	2	2	3	3	3	3	3
	Penetration Gaging Depth	.080 .055	.097 .071	.113 .089	.113 .089	.124 .098	.144 .118	.144 .118	.186 .160	.186 .160
W	Washer Diameter	.288 .278	.338 .327	.383 .372	.383 .372	.408 .396	.478 .466	.478 .466	.610 .597	.610 .597
V	Washer Thickness	.021 .017	.023 .018	.025 .020	.025 .020	.025 .020	.028 .023	.028 .023	.034 .028	.034 .028
	MATERIAL	See Notes				FORD PART NUMBERS				
L	1/4	50741-S	50742-S							
LENGTH	3/8 1/2 5/8 3/4	50743-S 50749-S 50757-S 50765-S	50744-S 50750-S 50758-S 50766-S	54533-S 54534-S 54535-S 54536-S	50745-S 50751-S 50759-S 50767-S	50746-S 50752-S 50760-S 50768-S	50747-S 50753-S 50761-S 50769-S	50748-S 50754-S 50762-S 50770-S	50755-S 50763-S 50771-S	50756-S 50764-S 50772-S
	7/8 1 1 1/8 1 1/4		50773-S 50780-S	54537-S 54538-S	50774-S 50781-S	50775-S 50782-S 50787-S	50776-S 50783-S 50788-S 50792-S	50777-S 50784-S 50789-S 50793-S	50778-S 50785-S 50790-S 50794-S	50779-S 50786-S 50791-S 50795-S

NOTES: For General Specifications see Page C-950.01. For Finishes see Section "Z" Addendum.
MATERIAL: Screw - Steel; M-3422-A. Washer - Steel; SAE 1050, SAE 1060 or SAE 1065, heat treated to Rockwell C40 to C50.
For Header Point Specifications see General Specifications.
Recess penetration gaging values are shown above. For method and gaging equipment see Section "Z" Addendum.

FORD MOTOR COMPANY
STANDARD PARTS

MACHINE SCREWS
FLAT HEAD

SLOTTED
CLASS 2A

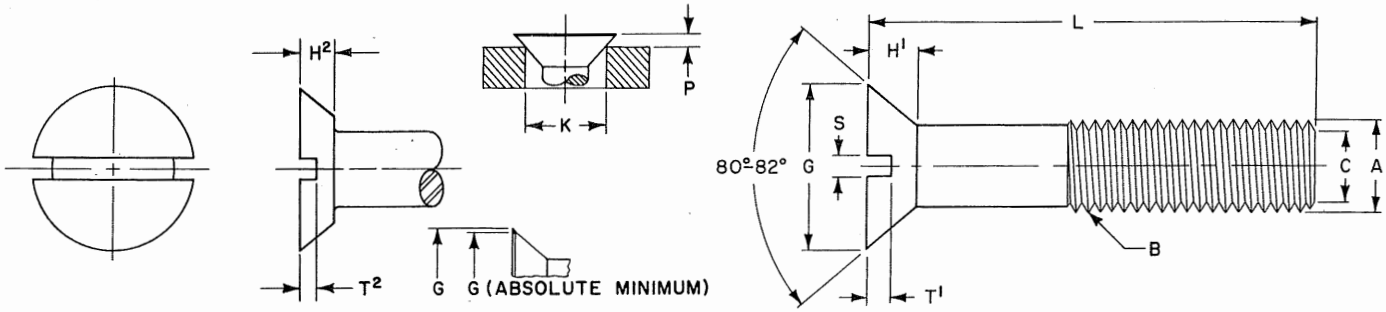

	Screw Size	4	6	8	10		12	1/4		5/16		3/8	
B	Threads Per Inch	40	32	32	24	32	24	20	28	18	24	16	24
A	Major Dia of Thread	.1112 .1061	.1372 .1312	.1631 .1571	.1890 .1818	.1891 .1831	.2150 .2078	.2489 .2408	.2490 .2425	.3113 .3026	.3114 .3042	.3737 .3643	.3739 .3667
	Pitch Dia of Thread	.0950 .0925	.1169 .1141	.1428 .1399	.1619 .1586	.1688 .1658	.1879 .1845	.2164 .2127	.2258 .2225	.2752 .2712	.2843 .2806	.3331 .3287	.3468 .3430
	Pitch Dia of Thread When Plated (Max.)	.0958	.1177	.1437	.1629	.1697	.1889	.2175	.2268	.2764	.2854	.3344	.3479
C	Minor Dia of Thread (Max)	.0805	.0989	.1248	.1379	.1508	.1639	.1876	.2052	.2431	.2603	.2970	.3228
G	Head Dia (Max. Sharp) (Min. Sharp) (Abs. Min.)	.225 .207 .195	.279 .257 .244	.332 .308 .292	.385 .359 .340	.385 .359 .340	.438 .410 .389	.507 .477 .452	.507 .477 .452	.635 .600 .568	.635 .600 .568	.762 .722 .685	.762 .722 .685
K	Gaging Diameter	.172	.220	.267	.313	.313	.362	.424	.424	.539	.539	.653	.653
P	Protrusion Above Gaging Diameter	.032 .019	.036 .021	.039 .023	.042 .025	.042 .025	.045 .027	.050 .029	.050 .029	.057 .034	.057 .034	.065 .039	.065 .039
H1	Head Height (Ref.)	.067	.083	.100	.116	.116	.132	.153	.153	.191	.191	.230	.230
H2	Head Height	.047 .038	.059 .048	.070 .058	.081 .068	.081 .068	.092 .078	.107 .092	.107 .092	.134 .116	.134 .116	.161 .140	.161 .140
S	Slot Width	.039 .031	.048 .039	.054 .045	.060 .050	.060 .050	.067 .056	.075 .064	.075 .064	.084 .072	.084 .072	.094 .081	.094 .081
T1	Slot Depth	.030 .020	.038 .024	.045 .029	.053 .034	.053 .034	.060 .039	.070 .046	.070 .046	.088 .058	.088 .058	.106 .070	.106 .070
T2	Slot Depth	.022 .014	.027 .017	.032 .021	.037 .024	.037 .024	.043 .028	.050 .032	.050 .032	.062 .041	.062 .041	.075 .049	.075 .049
	MATERIAL	Steel M 3422-A					FORD PART NUMBERS						
L	3/16	24600-S	24601-S	24602-S	24603-S	25203-S	24604-S						
	1/4	24605-S	24606-S	24607-S	24608-S	25208-S	24609-S						
	5/16	24610-S	24611-S	24612-S	24613-S	25213-S	24614-S						
	3/8	24615-S	24616-S	24617-S	24618-S	25218-S	24619-S	24297-S		24298-S		24299-S	
	7/16	24620-S	24621-S	24622-S	24623-S	25223-S	24624-S	24625-S	25225-S	24626-S	25226-S	24627-S	25227-S
	1/2	24628-S	24629-S	24630-S	24631-S	25231-S	24632-S	24633-S	25233-S	24634-S	25234-S	24635-S	25235-S
	9/16	24636-S	24637-S	24638-S	24639-S	25239-S	24640-S	24641-S	25241-S	24642-S	25242-S	24643-S	25243-S
	5/8	24644-S	24645-S	24646-S	24647-S	25247-S	24648-S	24649-S	25249-S	24650-S	25250-S	24651-S	25251-S
	11/16	24652-S	24653-S	24654-S	24655-S	25255-S	24656-S	24657-S	25257-S	24658-S	25258-S	24659-S	25259-S
	3/4	24660-S	24661-S	24662-S	24663-S	25263-S	24664-S	24665-S	25265-S	24666-S	25266-S	24667-S	25267-S
	7/8	24676-S	24677-S	24678-S	24679-S	25279-S	24680-S	24681-S	25281-S	25682-S	25282-S	24683-S	25283-S
	1	24692-S	24693-S	24694-S	24695-S	25295-S	24696-S	24697-S	25297-S	24698-S	25298-S	24699-S	25299-S
	1 1/8	24700-S	24701-S	24702-S	24703-S	25303-S	24704-S	24705-S	25305-S	24706-S	25306-S	24707-S	25307-S
	1 1/4	24708-S	24709-S	24710-S	24711-S	25311-S	24712-S	24713-S	25313-S	24714-S	25314-S	24715-S	25315-S
	1 3/8	24716-S	25717-S	24718-S	24719-S	25319-S	24720-S	24721-S	25321-S	24722-S	25322-S	24723-S	25323-S
	1 1/2	24724-S	24725-S	24726-S	24727-S	25327-S	24728-S	24729-S	25329-S	24730-S	25330-S	24731-S	25331-S
	1 5/8	24732-S	24733-S	24734-S	24735-S	25335-S	24736-S	24737-S	25337-S	24738-S	25338-S	24739-S	25339-S
	1 3/4	24740-S	24741-S	24742-S	24743-S	25343-S	24744-S	24745-S	25345-S	24746-S	25346-S	24747-S	25347-S
	1 7/8	24748-S	24749-S	24750-S	24751-S	25351-S	24752-S	24753-S	25353-S	24754-S	24754-S	25354-S	25355-S
	2	24756-S	24757-S	24758-S	24759-S	25359-S	24760-S	24761-S	25361-S	24762-S	25362-S	24763-S	25363-S
	2 1/8	24764-S	24765-S	24766-S	24767-S	25367-S	24768-S	24769-S	25369-S	24770-S	25370-S	24771-S	25371-S
	2 1/4	24772-S	24773-S	24774-S	24775-S	25375-S	24776-S	24777-S	25377-S	24778-S	25378-S	24779-S	25379-S
	2 3/8	24780-S	24781-S	24782-S	24783-S	25383-S	24784-S	24785-S	25385-S	24786-S	25386-S	24787-S	25387-S
	2 1/2	24788-S	24789-S	24790-S	24791-S	25391-S	24792-S	24793-S	25393-S	24794-S	25394-S	24795-S	25395-S
	2 5/8	24796-S	24797-S	24798-S	24799-S	25399-S	24800-S	24801-S	25401-S	24802-S	25402-S	24803-S	25403-S
	2 3/4	24804-S	24805-S	24806-S	24807-S	25407-S	24808-S	24809-S	25409-S	25810-S	25410-S	24811-S	25411-S
	3	24812-S	24813-S	24814-S	24815-S	25415-S	24816-S	24817-S	25417-S	24818-S	25418-S	24819-S	25419-S
	3 1/4	24820-S	24821-S	24822-S	24823-S	25423-S	24824-S	24825-S	25425-S	24826-S	25426-S	24827-S	25427-S
	3 1/2	24828-S	24829-S	24830-S	24831-S	25431-S	24832-S	24833-S	25433-S	24834-S	25434-S	24835-S	25435-S
	3 3/4	24836-S	24837-S	24838-S	24839-S	25439-S	24840-S	24841-S	25441-S	24842-S	25442-S	24843-S	25443-S
	4	24844-S	24845-S	24846-S	24847-S	25447-S	24848-S	24849-S	25449-S	24850-S	25450-S	24851-S	25451-S
	4 1/4	24852-S	24853-S	24854-S	24855-S	25455-S	24856-S	24857-S	25457-S	24858-S	25458-S	24859-S	25459-S
	4 1/2	24860-S	24861-S	24862-S	24863-S	25463-S	24864-S	24865-S	25465-S	24866-S	25466-S	24867-S	25467-S
	4 3/4	24868-S	24869-S	24870-S	24871-S	25471-S	24872-S	24873-S	25473-S	24874-S	25474-S	24875-S	25475-S
	5	24876-S	24877-S	24878-S	24879-S	25479-S	24880-S	24881-S	25481-S	24882-S	25482-S	24883-S	25483-S
	5 1/2	24884-S	24885-S	24886-S	24887-S	25487-S	24888-S	24889-S	25489-S	24890-S	25490-S	24891-S	25491-S
	6	24892-S	24893-S	24894-S	24895-S	25495-S	24896-S	24897-S	25497-S	24898-S	25498-S	24899-S	25499-S

NOTES: For General Specifications see Page C-950.01. For Finishes see Section "Z" Addendum.
H^1 and T^1 show dimensions for standard length screws only. (Part Numbers shown below double lines).
H^2 and T^2 show dimensions for short length undercut head screws only. (Part Numbers shown above double lines).
Protrusion gaging values are shown above. For method, gage tolerances and gaging equipment see Section "Z" Addendum.

FORD MOTOR COMPANY
STANDARD PARTS

MACHINE SCREWS
FLAT HEAD

SLOTTED
CLASS 2A

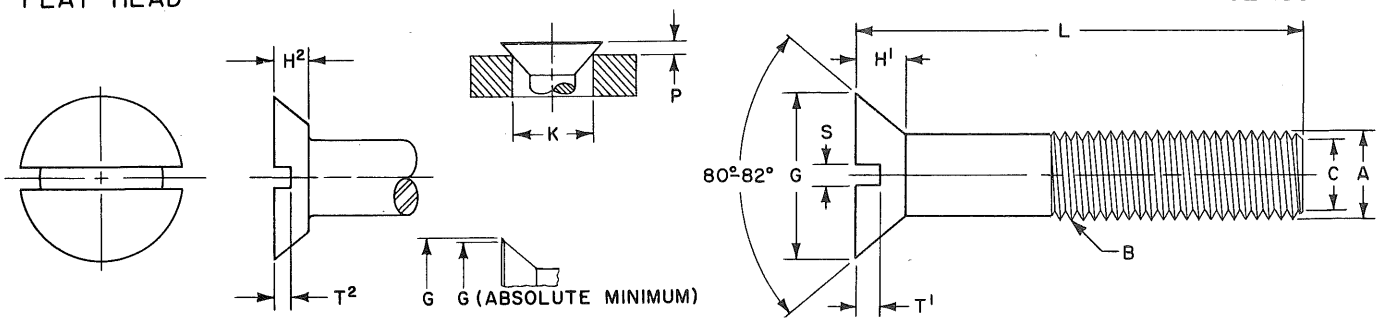

	Screw Size	4	6	8	10		12	1/4		5/16		3/8	
B	Threads Per Inch	40	32	32	24	32	24	20	28	18	24	16	24
A	Major Dia of Thread	.1112 .1061	.1372 .1312	.1631 .1571	.1890 .1818	.1891 .1831	.2150 .2078	.2489 .2408	.2490 .2425	.3113 .3026	.3114 .3042	.3737 .3643	.3739 .3667
	Pitch Dia of Thread	.0950 .0925	.1169 .1141	.1428 .1399	.1619 .1586	.1688 .1658	.1879 .1845	.2164 .2127	.2258 .2225	.2752 .2712	.2843 .2806	.3331 .3287	.3468 .3430
	Pitch Dia of Thread When Plated (Max.)	.0958	.1177	.1437	.1629	.1697	.1889	.2175	.2268	.2764	.2854	.3344	.3479
C	Minor Dia of Thread (Max.)	.0805	.0989	.1248	.1379	.1508	.1639	.1876	.2052	.2431	.2603	.2970	.3228
G	Head Dia. (Max. Sharp) (Min. Sharp) (Abs. Min.)	.225 .207 .195	.279 .257 .244	.332 .308 .292	.385 .359 .340	.385 .359 .340	.438 .410 .389	.507 .477 .452	.507 .477 .452	.635 .600 .568	.635 .600 .568	.762 .722 .685	.762 .722 .685
K	Gaging Diameter	.172	.220	.267	.313	.313	.362	.424	.424	.539	.539	.653	.653
P	Protrusion Above Gaging Diameter	.032 .019	.036 .021	.039 .023	.042 .025	.042 .025	.045 .027	.050 .029	.050 .029	.057 .034	.057 .034	.065 .039	.065 .039
H^1	Head Height (Ref.)	.067	.083	.100	.116	.116	.132	.153	.153	.191	.191	.230	.230
H^2	Head Height	.047 .038	.059 .048	.070 .058	.081 .068	.081 .068	.092 .078	.107 .092	.107 .092	.134 .116	.134 .116	.161 .140	.161 .140
S	Slot Width	.039 .031	.048 .039	.054 .045	.060 .050	.060 .050	.067 .056	.075 .064	.075 .064	.084 .072	.084 .072	.094 .081	.094 .081
T^1	Slot Depth	.030 .020	.038 .024	.045 .029	.053 .034	.053 .034	.060 .039	.070 .046	.070 .046	.088 .058	.088 .058	.106 .070	.106 .070
T^2	Slot Depth	.022 .014	.027 .017	.032 .021	.037 .024	.037 .024	.043 .028	.050 .032	.050 .032	.062 .041	.062 .041	.075 .049	.075 .049
	MATERIAL	Brass SAE 80-B					FORD PART NUMBERS						
L	3/16	25835-S	25836-S	25837-S	53818-S	25838-S	25839-S						
	1/4	25840-S	25841-S	25842-S	53819-S	25843-S	25844-S						
	5/16	25845-S	25846-S	25847-S	53820-S	25848-S	25849-S						
	3/8	25850-S	25851-S	25852-S	53821-S	25853-S	25854-S						
	7/16	25855-S	25856-S	25857-S	53822-S	25858-S	25859-S	25860-S	25500-S	25861-S	25501-S	25862-S	25502-S
	1/2	25863-S	25864-S	25865-S	53823-S	25866-S	25867-S	25868-S	25503-S	25869-S	25504-S	25870-S	25505-S
	9/16	25871-S	25872-S	25873-S	53824-S	25874-S	25875-S	25876-S	25506-S	25877-S	25507-S	25878-S	25508-S
	5/8	25879-S	25880-S	25881-S	53825-S	25882-S	25883-S	25884-S	25509-S	25885-S	25510-S	25886-S	25511-S
	11/16	25887-S	25888-S	25889-S	53826-S	25890-S	25891-S	25892-S	25512-S	25893-S	25513-S	25894-S	25514-S
	3/4	25895-S	25896-S	25897-S	53827-S	25898-S	25899-S	25900-S	25515-S	25901-S	25516-S	25902-S	25517-S
	7/8	25911-S	25912-S	25913-S	53828-S	25914-S	25915-S	25916-S	25521-S	25917-S	25522-S	25918-S	25523-S
	1	25927-S	25928-S	25929-S	53829-S	25930-S	25931-S	25932-S	25527-S	25933-S	25528-S	25934-S	25529-S
	1 1/8	25935-S	25936-S	25937-S	53830-S	25938-S	25939-S	25940-S	25530-S	25941-S	25531-S	25942-S	25532-S
	1 1/4	25943-S	25944-S	25945-S	53831-S	25946-S	25947-S	25948-S	25533-S	25949-S	25534-S	25950-S	25535-S
	1 3/8	25951-S	25952-S	25953-S	53832-S	25954-S	25955-S	25956-S	25536-S	25957-S	25537-S	25958-S	25538-S
	1 1/2	25959-S	25960-S	25961-S	53833-S	25962-S	25963-S	25964-S	25539-S	25965-S	25540-S	25966-S	25541-S
	1 5/8	25967-S	25968-S	25969-S	53834-S	25970-S	25971-S	25972-S	25542-S	25973-S	25543-S	25974-S	25544-S
	1 3/4	25975-S	25976-S	25977-S	53835-S	25978-S	25979-S	25980-S	25545-S	25981-S	25546-S	25982-S	25547-S
	1 7/8	25983-S	25984-S	25985-S	53836-S	25986-S	25987-S	25988-S	25548-S	25989-S	25549-S	25990-S	25550-S
	2	25991-S	25992-S	25993-S	53837-S	25994-S	25995-S	25996-S	25551-S	25997-S	25552-S	25998-S	25553-S
	2 1/8	25999-S	26000-S	26001-S	53838-S	26002-S	26003-S	26004-S	25554-S	26005-S	25555-S	26006-S	25556-S
	2 1/4	26007-S	26008-S	26009-S	53839-S	26010-S	26011-S	26012-S	25557-S	26013-S	25558-S	26014-S	25560-S
	2 3/8	26015-S	26016-S	26017-S	53840-S	26018-S	26019-S	26020-S	25661-S	26021-S	25562-S	26022-S	25563-S
	2 1/2	26023-S	26024-S	26025-S	53841-S	26026-S	26027-S	26028-S	25564-S	26029-S	25565-S	26030-S	25566-S
	2 5/8	26031-S	26032-S	26033-S	53842-S	26034-S	26035-S	26036-S	25567-S	26037-S	25568-S	26038-S	25569-S
	2 3/4	26039-S	26040-S	26041-S	53843-S	26042-S	26043-S	26044-S	25570-S	26045-S	25571-S	26046-S	25572-S
	3	26047-S	26048-S	26049-S	53844-S	26050-S	26051-S	26052-S	25573-S	26053-S	25574-S	26054-S	25575-S
	3 1/4	26055-S	26056-S	26057-S	53845-S	26058-S	26059-S	26060-S	25576-S	26061-S	25577-S	26062-S	25578-S
	3 1/2	26063-S	26064-S	26065-S	53846-S	26066-S	26067-S	26068-S	25579-S	26069-S	25580-S	26070-S	25581-S
	3 3/4	26071-S	26072-S	26073-S	53847-S	26074-S	26075-S	26076-S	25582-S	26077-S	25583-S	26078-S	25584-S
	4	26079-S	26080-S	26081-S	53848-S	26082-S	26083-S	26084-S	25585-S	26085-S	25586-S	26086-S	25587-S
	4 1/4			26087-S	53849-S	26088-S	26089-S	26090-S	25588-S	26091-S	25589-S	26092-S	25590-S
	4 1/2			26093-S	53850-S	26094-S	26095-S	26096-S	25591-S	26097-S	25592-S	26098-S	25593-S
	4 3/4			26099-S	53851-S	26100-S	26101-S	26102-S	25594-S	26103-S	25595-S	26104-S	25596-S
	5				53852-S	26105-S	26106-S	26107-S	25597-S	26108-S	25598-S	26109-S	25599-S
	5 1/2				53853-S	26110-S	26111-S	26112-S	25600-S	26113-S	25601-S	26114-S	25602-S
	6				53854-S	26115-S	26116-S	26117-S	25603-S	26118-S	25604-S	26119-S	25605-S

LENGTH

NOTES: For General Specifications see Page C-950.01. For Finishes see Section "Z" Addendum.
H^1 and T^1 show dimensions for standard length screws only. (Part Numbers shown below double lines).
H^2 and T^2 show dimensions for short length undercut head screws only. (Part Numbers shown above double lines).
Protrusion gaging values are shown above. For method gage tolerances and gaging equipment see Section "Z" Addendum.

FORD MOTOR COMPANY
STANDARD PARTS

MACHINE SCREWS
FLAT HEAD

SLOTTED
CLASS 2A

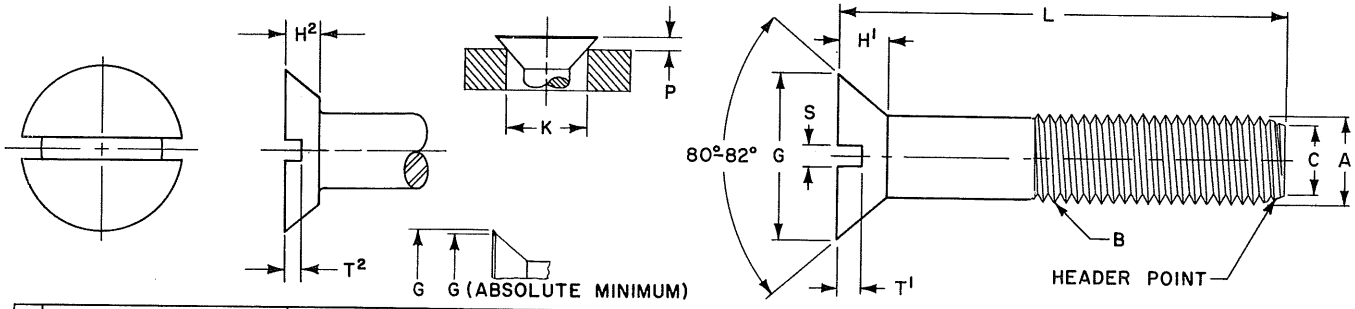

	Screw Size	4	6	8	10		12	1/4		5/16		3/8	
B	Threads Per Inch	40	32	32	24	32	24	20	28	18	24	16	24
A	Major Dia of Thread	.1112 .1061	.1372 .1312	.1631 .1571	.1890 .1818	.1891 .1831	.2150 .2078	.2489 .2408	.2490 .2425	.3113 .3026	.3114 .3042	.3737 .3643	.3739 .3667
	Pitch Dia of Thread	.0950 .0925	.1169 .1141	.1428 .1399	.1619 .1586	.1688 .1658	.1879 .1845	.2164 .2127	.2258 .2225	.2752 .2712	.2843 .2806	.3331 .3287	.3468 .3430
	Pitch Dia of Thread When Plated (Max.)	.0958	.1177	.1437	.1629	.1697	.1889	.2175	.2268	.2764	.2843	.3344	.3479
C	Minor Dia of Thread (Max.)	.0805	.0989	.1248	.1379	.1508	.1639	.1876	.2052	.2431	.2603	.2970	.3228
G	Head Dia (Max. Sharp) (Min. Sharp) (Abs. Min.)	.225 .207 .195	.279 .257 .244	.332 .308 .292	.385 .359 .340	.385 .359 .340	.438 .410 .389	.507 .477 .452	.507 .477 .452	.635 .600 .568	.635 .600 .568	.762 .722 .685	.762 .722 .685
K	Gaging Diameter	.172	.220	.267	.313	.313	.362	.424	.424	.539	.539	.653	.653
P	Protrusion Above Gaging Diameter	.032 .019	.036 .021	.039 .023	.042 .025	.042 .025	.045 .027	.050 .029	.050 .029	.057 .034	.057 .034	.065 .039	.065 .039
H1	Head Height (Ref.)	.067	.083	.100	.116	.116	.132	.153	.153	.191	.191	.230	.230
H2	Head Height	.047 .038	.059 .048	.070 .058	.081 .068	.081 .068	.092 .078	.107 .092	.107 .092	.134 .116	.134 .116	.161 .140	.161 .140
S	Slot Width	.039 .031	.048 .039	.054 .045	.060 .050	.060 .050	.067 .056	.075 .064	.075 .064	.084 .072	.084 .072	.094 .081	.094 .081
T1	Slot Depth	.030 .020	.038 .024	.045 .029	.053 .034	.053 .034	.060 .039	.070 .046	.070 .046	.088 .058	.088 .058	.106 .070	.106 .070
T2	Slot Depth	.022 .014	.027 .017	.032 .021	.037 .024	.037 .024	.043 .028	.050 .032	.050 .032	.062 .041	.062 .041	.075 .049	.075 .049
	MATERIAL	Steel M 3422-A					FORD PART NUMBERS						
L	3/16	35960-S	35961-S	35962-S	54079-S	35963-S	35964-S						
	1/4	35965-S	35966-S	35967-S	54080-S	35968-S	35969-S						
	5/16	35970-S	35971-S	35972-S	54081-S	35973-S	35974-S						
	3/8	35975-S	35976-S	35977-S	54082-S	35978-S	35979-S	35980-S	35981-S	35982-S	35983-S	35984-S	35985-S
	7/16	35986-S	35987-S	35988-S	54083-S	35989-S	35990-S	35991-S	35992-S	35993-S	35994-S	35995-S	35996-S
	1/2	35997-S	35998-S	35999-S	54084-S	36000-S	36001-S	36002-S	36003-S	36004-S	36005-S	36006-S	36007-S
	9/16	36008-S	36009-S	36010-S	54085-S	36011-S	36012-S	36013-S	36014-S	36015-S	36016-S	36017-S	36018-S
	5/8	36019-S	36020-S	36021-S	54086-S	36022-S	36023-S	36024-S	36025-S	36026-S	36027-S	36028-S	36029-S
	11/16	36030-S	36031-S	36032-S	54087-S	36033-S	36034-S	36035-S	35036-S	36037-S	36038-S	36039-S	36040-S
	3/4	36041-S	36042-S	36043-S	54088-S	36044-S	36045-S	36046-S	36047-S	36048-S	36049-S	36050-S	36051-S
	7/8	36063-S	36064-S	36065-S	54089-S	36066-S	36067-S	36068-S	36069-S	36070-S	36071-S	36072-S	36073-S
	1	36085-S	36086-S	36087-S	54090-S	36088-S	36089-S	36090-S	36091-S	36092-S	36093-S	36094-S	36095-S
	1 1/8	36096-S	36097-S	36098-S	54091-S	36099-S	36100-S	36101-S	36102-S	36103-S	36104-S	36105-S	36106-S
	1 1/4	36107-S	36108-S	36109-S	54092-S	36110-S	36111-S	36112-S	36113-S	36114-S	36115-S	36116-S	36117-S
	1 3/8	36118-S	36119-S	36120-S	54093-S	36121-S	36122-S	36123-S	36124-S	36125-S	36126-S	36127-S	36128-S
	1 1/2	36129-S	36130-S	36131-S	54094-S	36132-S	36133-S	36134-S	36135-S	36136-S	36137-S	36138-S	36139-S
	1 5/8	36140-S	36141-S	36142-S	54095-S	36143-S	36144-S	36145-S	36146-S	36147-S	36148-S	36149-S	36150-S
	1 3/4	36151-S	36152-S	36153-S	54096-S	36154-S	36155-S	36156-S	36157-S	36158-S	36159-S	36160-S	36161-S
	1 7/8	36162-S	36163-S	36164-S	54097-S	36165-S	36166-S	36167-S	36168-S	36169-S	36170-S	36171-S	36172-S
	2	36173-S	36174-S	36175-S	54098-S	36176-S	36177-S	36178-S	36179-S	36180-S	36181-S	36182-S	36183-S
	2 1/8	36184-S	36185-S	36186-S	54099-S	36187-S	36188-S	36189-S	36190-S	36191-S	36192-S	36193-S	36194-S
	2 1/4	36195-S	36196-S	36197-S	54100-S	36198-S	36199-S	36200-S	36201-S	36202-S	36203-S	36204-S	36205-S
	2 3/8	36206-S	36207-S	36208-S	54101-S	36209-S	36210-S	36211-S	36212-S	36213-S	36214-S	36215-S	36216-S
	2 1/2	36217-S	36218-S	36219-S	54102-S	36220-S	36221-S	36222-S	36223-S	36224-S	36225-S	36226-S	36227-S
	2 5/8	36228-S	36229-S	36230-S	54103-S	36231-S	36232-S	36233-S	36234-S	36235-S	36236-S	36237-S	36238-S
	2 3/4	36239-S	36240-S	36241-S	54104-S	36242-S	36243-S	36244-S	36245-S	36246-S	36247-S	36248-S	36249-S
	3	36250-S	36251-S	36252-S	54105-S	36253-S	36254-S	36255-S	36256-S	36257-S	36258-S	36259-S	36260-S
	3 1/4	36261-S	36262-S	36263-S	54106-S	36264-S	36265-S	36266-S	36267-S	36268-S	36269-S	36270-S	36271-S
	3 1/2	36272-S	36273-S	36274-S	54107-S	36275-S	36276-S	36277-S	36278-S	36279-S	36280-S	36281-S	36282-S
	3 3/4	36283-S	36284-S	36285-S	54108-S	36286-S	36287-S	36288-S	36289-S	36290-S	36291-S	36292-S	36293-S
	4	36294-S	36295-S	36296-S	54109-S	36297-S	36298-S	36299-S	36300-S	36301-S	36302-S	36303-S	36304-S
	4 1/4	36305-S	36306-S	36307-S	54110-S	36308-S	36309-S	36310-S	36311-S	35312-S	36313-S	36314-S	36315-S
	4 1/2	36316-S	36317-S	36318-S	54111-S	36319-S	36320-S	36321-S	36322-S	36323-S	36324-S	36325-S	36326-S
	4 3/4	36327-S	36328-S	36329-S	54112-S	36330-S	36331-S	36332-S	36333-S	36334-S	36335-S	36336-S	36337-S
	5	36328-S	36339-S	36340-S	54113-S	36341-S	36342-S	36343-S	36344-S	36345-S	36346-S	36347-S	36348-S
	5 1/2	36349-S	36350-S	36351-S	54114-S	36352-S	36353-S	36354-S	36355-S	36356-S	36357-S	36358-S	36359-S
	6	36360-S	36361-S	36362-S	54115-S	36363-S	36364-S	36365-S	36366-S	36367-S	36368-S	36369-S	36370-S

NOTES: For General Specifications see Page C-950.01. For Finishes see Section "Z" Addendum.
H^1 and T^1 show dimensions for standard length screws only. (Part Numbers shown below double lines).
H^2 and T^2 show dimensions for short length undercut head screws only. (Part Numbers shown above double lines).
For Header Point Specifications see General Specifications.
Protrusion gaging values are shown above. For method, gage tolerances and gaging equipment see Section "Z" Addendum.

FORD MOTOR COMPANY
STANDARD PARTS

MACHINE SCREWS
FLAT HEAD

SLOTTED
CLASS 2A

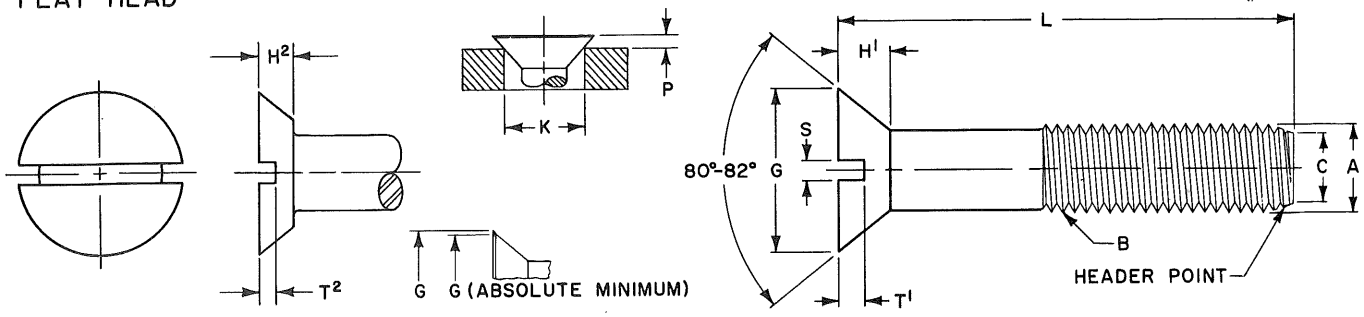

	Screw Size	4	6	8	10		12	1/4		5/16		3/8	
B	Threads Per Inch	40	32	32	24	32	24	20	28	18	24	16	24
A	Major Dia of Thread	.1112 .1061	.1372 .1312	.1631 .1571	.1890 .1818	.1891 .1831	.2150 .2078	.2489 .2408	.2490 .2425	.3113 .3026	.3114 .3042	.3737 .3643	.3739 .3667
	Pitch Dia of Thread	.0950 .0925	.1169 .1141	.1428 .1399	.1619 .1586	.1688 .1658	.1879 .1845	.2164 .2127	.2258 .2225	.2752 .2712	.2843 .2806	.3331 .3287	.3468 .3430
	Pitch Dia of Thread When Plated (Max.)	.0958	.1177	.1437	.1629	.1697	.1889	.2175	.2268	.2764	.2854	.3344	.3479
C	Minor Dia of Thread (Max.)	.0805	.0989	.1248	.1379	.1508	.1639	.1876	.2052	.2431	.2603	.2970	.3228
G	Head Dia (Max. Sharp) (Min. Sharp) (Abs. Min.)	.225 .207 .195	.279 .257 .244	.332 .308 .292	.385 .359 .340	.385 .359 .340	.438 .410 .389	.507 .477 .452	.507 .477 .452	.635 .600 .568	.635 .600 .568	.762 .722 .685	.762 .722 .685
K	Gaging Diameter	.172	.220	.267	.313	.313	.362	.424	.424	.539	.539	.653	.653
P	Protrusion Above Gaging Diameter	.032 .019	.036 .021	.039 .023	.042 .025	.042 .025	.045 .027	.050 .029	.050 .029	.057 .034	.057 .034	.065 .039	.065 .039
H^1	Head Height (Ref.)	.067	.083	.100	.116	.116	.132	.153	.153	.191	.191	.230	.230
H^2	Head Height	.047 .038	.059 .048	.070 .058	.081 .068	.081 .068	.092 .078	.107 .092	.107 .092	.134 .116	.134 .116	.161 .140	.161 .140
S	Slot Width	.039 .031	.048 .039	.054 .045	.060 .050	.060 .050	.067 .056	.075 .064	.075 .064	.084 .072	.084 .072	.094 .081	.094 .081
T^1	Slot Depth	.030 .020	.038 .024	.045 .029	.053 .034	.053 .034	.060 .039	.070 .046	.070 .046	.088 .058	.088 .058	.106 .070	.106 .070
T^2	Slot Depth	.022 .014	.027 .017	.032 .021	.037 .024	.037 .024	.043 .028	.050 .032.	.050 .032	.062 .041	.062 .041	.075 .049	.075 .049

	MATERIAL	Brass SAE 80-B						FORD PART NUMBERS					
L	3/16	36371-S	36372-S	36373-S	54116-S	36374-S	36375-S						
	1/4	36376-S	36377-S	36378-S	54117-S	36379-S	36380-S						
	5/16	36381-S	36382-S	36383-S	54118-S	36384-S	36385-S						
	3/8	36386-S	36387-S	36388-S	54119-S	36389-S	36390-S						
	7/16	36391-S	36392-S	36393-S	54120-S	36394-S	36395-S	36396-S	36397-S	36398-S	36399-S	36400-S	36401-S
	1/2	36402-S	36403-S	36404-S	54121-S	36405-S	36406-S	36407-S	36408-S	36409-S	36410-S	36411-S	36412-S
	9/16	36413-S	36414-S	36415-S	54122-S	36416-S	36417-S	36418-S	36419-S	36420-S	36421-S	36422-S	36423-S
	5/8	36424-S	36425-S	36426-S	54123-S	36427-S	36428-S	36429-S	36430-S	36431-S	36432-S	36433-S	36434-S
	11/16	36435-S	36436-S	36437-S	54124-S	36438-S	36439-S	36440-S	36441-S	36442-S	36443-S	36444-S	36445-S
	3/4	36446-S	36447-S	36448-S	54125-S	36449-S	36450-S	36451-S	36452-S	36453-S	36454-S	36455-S	36456-S
	7/8	36468-S	36469-S	36470-S	54126-S	36471-S	36472-S	36473-S	36474-S	36475-S	36476-S	36477-S	36478-S
	1	36490-S	36491-S	36492-S	54127-S	36493-S	36494-S	36495-S	36496-S	36497-S	36498-S	36499-S	36500-S
	1 1/8	36501-S	36502-S	36503-S	54128-S	36504-S	36505-S	36506-S	36507-S	36508-S	36509-S	36510-S	36511-S
	1 1/4	36512-S	36513-S	36514-S	54129-S	36515-S	36516-S	36517-S	36518-S	36519-S	36520-S	36521-S	36522-S
	1 3/8	36523-S	36524-S	36525-S	54130-S	36526-S	36527-S	36528-S	36529-S	36530-S	36531-S	36532-S	36533-S
	1 1/2	36534-S	36535-S	36536-S	54131-S	36537-S	36538-S	36539-S	36540-S	36541-S	36542-S	36543-S	36544-S
	1 5/8	36545-S	36546-S	36547-S	54132-S	36548-S	36549-S	36550-S	36551-S	36552-S	36553-S	36554-S	36555-S
	1 3/4	36556-S	36557-S	36558-S	54133-S	36559-S	36560-S	36561-S	36562-S	36563-S	36564-S	36565-S	36566-S
	1 7/8	36567-S	36568-S	36569-S	54134-S	36570-S	36571-S	36572-S	36573-S	36574-S	36575-S	36576-S	36577-S
	2	36578-S	36579-S	36580-S	54135-S	36581-S	36582-S	36583-S	36584-S	36585-S	36586-S	36587-S	36588-S
	2 1/8	36589-S	36590-S	36591-S	54136-S	36592-S	36593-S	36594-S	36595-S	36596-S	36597-S	36598-S	36599-S
	2 1/4	36600-S	36601-S	36602-S	54137-S	36603-S	36604-S	36605-S	36606-S	36607-S	36608-S	36609-S	36610-S
	2 3/8	36611-S	36612-S	36613-S	54138-S	36614-S	36615-S	36616-S	36617-S	36618-S	36619-S	36620-S	36621-S
	2 1/2	36622-S	36623-S	36624-S	54139-S	36625-S	36626-S	36627-S	36628-S	36629-S	36630-S	36631-S	36632-S
	2 5/8	36633-S	36634-S	36635-S	54140-S	36636-S	36637-S	36638-S	36639-S	36640-S	36641-S	36642-S	36643-S
	2 3/4	36644-S	36645-S	36646-S	54141-S	36647-S	36648-S	36649-S	36650-S	36651-S	36652-S	36653-S	36654-S
	3	36655-S	36656-S	36657-S	54142-S	36658-S	36659-S	36660-S	36661-S	36662-S	36663-S	36664-S	36665-S
	3 1/4	36666-S	36667-S	36668-S	54143-S	36669-S	36670-S	36671-S	36672-S	36673-S	36674-S	36675-S	36676-S
	3 1/2	36677-S	36678-S	36679-S	54144-S	36680-S	36681-S	36682-S	36683-S	36684-S	36685-S	36686-S	36687-S
	3 3/4	36688-S	36689-S	36690-S	54145-S	36691-S	36692-S	36693-S	36694-S	36695-S	36696-S	36697-S	36698-S
	4	36699-S	36700-S	36701-S	54146-S	36702-S	36703-S	36704-S	36705-S	36706-S	36707-S	36708-S	36709-S
	4 1/4	36710-S	36711-S	36712-S	54147-S	36713-S	36714-S	36715-S	36716-S	36717-S	36718-S	36719-S	36720-S
	4 1/2	36721-S	36722-S	36723-S	54148-S	36724-S	36725-S	36726-S	36727-S	36728-S	36729-S	36730-S	36731-S
	4 3/4	36732-S	36733-S	36734-S	54149-S	36735-S	36736-S	36737-S	36738-S	36739-S	36740-S	36741-S	36742-S
	5	36743-S	36744-S	36745-S	54150-S	36746-S	36747-S	36748-S	36749-S	36750-S	36751-S	36752-S	36753-S
	5 1/2	36754-S	36755-S	36756-S	54151-S	36757-S	36758-S	36759-S	36760-S	36761-S	36762-S	36763-S	36764-S
	6	36765-S	36766-S	36767-S	54152-S	36768-S	36769-S	36770-S	36771-S	36772-S	36773-S	36774-S	36775-S

NOTES: For General Specifications see Page C-950.01. For Finishes see Section "Z" Addendum.
H^1 and T^1 show dimensions for standard length screws only. (Part Numbers shown below double lines).
H^2 and T^2 show dimensions for short length undercut head screws only. (Part Numbers shown above double lines).
For Header Point Specifications see General Specifications.
Protrusion gaging values are shown aobve. For method gage tolerances and gaging equipment see Section "Z" Addendum.

FORD MOTOR COMPANY
STANDARD PARTS

MACHINE SCREWS
FLAT HEAD

CROSS RECESSED
CLASS 2A

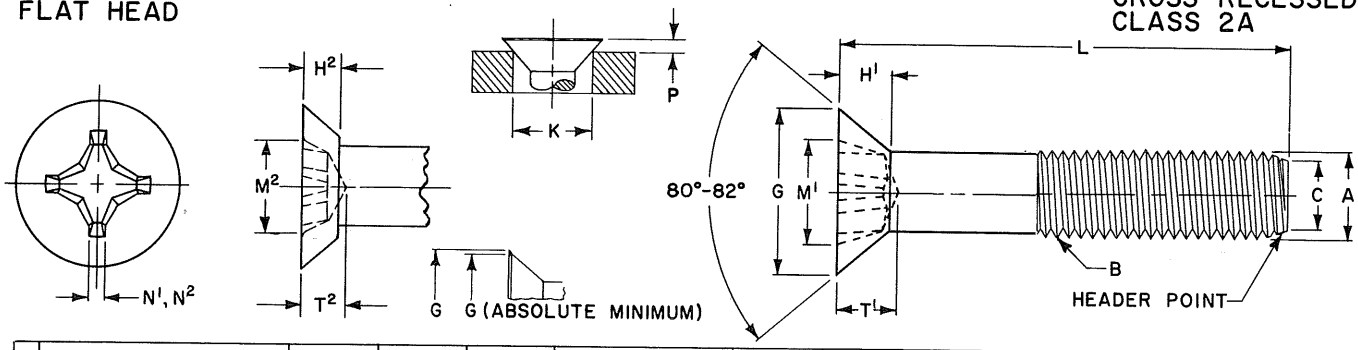

	Screw Size	4	6	8	10		12	1/4		5/16		3/8	
B	Threads Per Inch	40	32	32	24	32	24	20	28	18	24	16	24
A	Major Dia of Thread	.1112 .1061	.1372 .1312	.1631 .1571	.1890 .1818	.1891 .1831	.2150 .2078	.2489 .2408	.2490 .2425	.3113 .3026	.3114 .3042	.3737 .3643	.3739 .3667
	Pitch Dia of Thread	.0950 .0925	.1169 .1141	.1428 .1399	.1619 .1586	.1688 .1658	.1879 .1845	.2164 .2127	.2258 .2225	.2752 .2712	.2843 .2806	.3331 .3287	.3468 .3430
	Pitch Dia of Thread When Plated (Max.)	.0958	.1177	.1437	.1629	.1697	.1889	.2175	.2268	.2764	.2854	.3344	.3479
C	Minor Dia of Thread (Max.)	.0805	.0989	.1248	.1379	.1508	.1639	.1876	.2052	.2431	.2603	.2970	.3228
G	Head Dia (Max. Sharp) (Min. Sharp) (Abs. Min.)	.225 .207 .195	.279 .257 .244	.332 .308 .292	.385 .359 .340	.385 .359 .340	.438 .410 .389	.507 .477 .452	.507 .477 .452	.635 .600 .568	.635 .600 .568	.762 .722 .685	.762 .722 .685
K	Gaging Diameter	.172	.220	.267	.313	.313	.362	.424	.424	.539	.539	.653	.653
P	Protrusion Above Gaging Dia.	.032 .019	.036 .021	.039 .023	.042 .025	.042 .025	.045 .027	.050 .029	.050 .029	.057 .034	.057 .034	.065 .039	.065 .039
H1	Head Height (Ref.)	.067	.083	.100	.116	.116	.132	.153	.153	.191	.191	.230	.230
H2	Head Height	.047 .038	.059 .048	.070 .058	.081 .068	.081 .068	.092 .078	.107 .092	.107 .092	.134 .116	.134 .166	.161 .140	.161 .140
M1	Recess Diameter	.128 .115	.174 .161	.189 .176	.204 .191	.204 .191	.268 .255	.283 .270	.283 .270	.365 .352	.365 .352	.393 .380	.393 .380
M2	Recess Diameter	.116 .103	.149 .136	.174 .161	.189 .176	.189 .176	.233 .220	.250 .237	.250 .237	.317 .304	.317 .304	.365 .352	.365 .352
T1	Recess Depth	.089 .073	.106 .083	.121 .098	.136 .113	.136 .113	.156 .133	.171 .148	.171 .148	.216 .194	.216 .194	.245 .223	.245 .223
T2	Recess Depth	.078 .062	.078 .055	.106 .083	.121 .098	.121 .098	.121 .101	.136 .116	.136 .116	.168 .146	.168 .146	.216 .194	.216 .194
N1	Recess Width (Min.)	.018	.029	.031	.032	.032	.035	.036	.036	.061	.061	.065	.065
N2	Recess Width (Min.)	.018	.025	.029	.031	.031	.030	.032	.032	.053	.053	.061	.061
	Driver Size	1	2	2	2	2	3	3	3	4	4	4	4
	Penetration Gaging Depth	.082 .066	.095 .072	.110 .087	.125 .102	.125 .102	.139 .116	.154 .131	.154 .131	.196 .174	.196 .174	.225 .203	.225 .203
	Penetration Gaging Depth	.071 .055	.064 .041	.095 .072	.110 .087	.110 .087	.104 .081	.119 .096	.119 .096	.148 .126	.148 .126	.196 .174	.196 .174
	MATERIAL	Steel M 3422-A											

FORD PART NUMBERS

LENGTH												
1/4	50000-S 50004-S	50001-S	50002-S	54452-S	50003-S							
3/8		50005-S	50006-S	54453-S	50007-S	50008-S	50009-S	50010-S				
1/2		50011-S	50012-S	54454-S	50013-S	50014-S	50015-S	50016-S	50017-S	50018-S	50019-S	50020-S
5/8		50021-S 50031-S	50022-S 50032-S 50041-S 50050-S	54455-S 54456-S 54457-S 54458-S	50023-S 50033-S 50042-S 50051-S	50024-S 50034-S 50043-S 50052-S	50025-S 50035-S 50044-S 50053-S	50026-S 50036-S 50045-S 50054-S	50027-S 50037-S 50046-S 50055-S	50028-S 50038-S 50047-S 50056-S	50029-S 50039-S 50048-S 50057-S	50030-S 50040-S 50049-S 50058-S
3/4												
7/8												
1												
1 1/4			50059-S 50068-S 50077-S 50086-S	54459-S 54460-S 54461-S 54462-S	50060-S 50069-S 50078-S 50087-S	50061-S 50070-S 50079-S 50088-S	50062-S 50071-S 50080-S 50089-S	50063-S 50072-S 50081-S 50090-S	50064-S 50073-S 50082-S 50091-S	50065-S 50074-S 50083-S 50092-S	50066-S 50075-S 50084-S 50093-S	50067-S 50076-S 50085-S 50094-S
1 1/2												
1 3/4												
2												
2 1/4			50095-S 50104-S	54463-S 54464-S	50096-S 50105-S	50097-S 50106-S	50098-S 50107-S 50113-S 50119-S	50099-S 50108-S 50114-S 50120-S	50100-S 50109-S 50115-S 50121-S	50101-S 50110-S 50116-S 50122-S	50102-S 50111-S 50117-S 50123-S	50103-S 50112-S 50118-S 50124-S
2 1/2												
2 3/4												
3												

NOTES: For General Specifications see Page C-950.01. For Finishes see Section "Z" Addendum.
H^1, M^1, T^1 and N^1 show dimensions for standard length screws only. (Part Numbers shown below double lines).
H^2, M^2, T^2 and N^2 show dimensions for short length undercut head screws only. (Part Numbers shown above double lines).
For Header Point Specifications see General Specifications.
Recess penetration and protrusion gaging values are shown above. For method gage tolerances and gaging equipment, see Section "Z" Addendum.

FORD MOTOR COMPANY
STANDARD PARTS

MACHINE SCREWS
HEXAGON HEAD

CLASS 2A

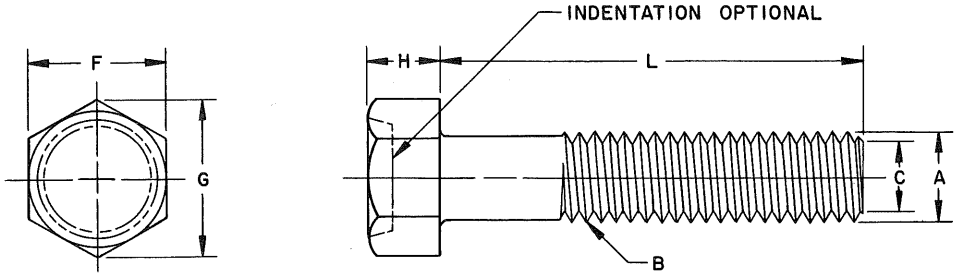

	Screw Size	4	6	8	10		12	1/4		5/16		3/8	
B	Threads Per Inch	40	32	32	24	32	24	20	28	18	24	16	24
A	Major Dia of Thread	.1112 .1061	.1372 .1312	.1631 .1571	.1890 .1818	.1891 .1831	.2150 .2078	.2489 .2408	.2490 .2425	.3113 .3026	.3114 .3042	.3737 .3643	.3739 .3667
	Pitch Dia of Thread	.0950 .0925	.1169 .1141	.1428 .1399	.1619 .1586	.1688 .1658	.1879 .1845	.2164 .2127	.2258 .2225	.2752 .2712	.2843 .2806	.3331 .3287	.3468 .3430
	Pitch Dia of Thread When Plated (Max.)	.0958	.1177	.1437	.1629	.1697	.1889	.2175	.2268	.2764	.2854	.3344	.3479
C	Minor Dia of Thread (Max.)	.0805	.0989	.1248	.1379	.1508	.1639	.1876	.2052	.2431	.2603	.2970	.3228
F	Width Across Flats	.187 .181	.250 .244	.250 .244	.312 .305	.312 .305	.312 .305	.375 .367	.375 .367	.500 .489	.500 .489	.562 .551	.562 .551
G	Width Across Corners (Min.)	.202	.272	.272	.340	.340	.340	.409	.409	.545	.545	.614	.614
H	Head Height	.060 .049	.093 .080	.110 .096	.120 .105	.120 .105	.155 .139	.190 .172	.190 .172	.230 .208	.230 .208	.295 .270	.295 .270
	MATERIAL	Steel M 3422-A					FORD PART NUMBERS						
L	3/16	54611-S	54612-S	54613-S	54614-S	54615-S	54616-S						
	1/4 5/16 3/8 7/16	54617-S 54623-S 54629-S 54639-S	54618-S 54624-S 54630-S 54640-S	54619-S 54625-S 54631-S 54641-S	54620-S 54626-S 54632-S 54642-S	54621-S 54627-S 54633-S 54643-S	54622-S 54628-S 54634-S 54644-S	54635-S 54645-S	54636-S 54646-S	54637-S 54647-S	54638-S 54648-S		
LENGTH	1/2 9/16 5/8 11/16	54649-S 54661-S 54673-S 54685-S	54650-S 54662-S 54674-S 54686-S	54651-S 54663-S 54675-S 54687-S	54652-S 54664-S 54676-S 54688-S	54653-S 54665-S 54677-S 54689-S	54654-S 54666-S 54678-S 54690-S	54655-S 54667-S 54679-S 54691-S	54656-S 54668-S 54680-S 54692-S	54657-S 54669-S 54681-S 54693-S	54658-S 54670-S 54682-S 54694-S	54659-S 54671-S 54683-S 54695-S	54660-S 54672-S 54684-S 54696-S
	3/4 7/8 1 1 1/8	54697-S 54709-S 54721-S 54733-S	54698-S 54710-S 54722-S 54734-S	54699-S 54711-S 54723-S 54735-S	54700-S 54712-S 54724-S 54736-S	54701-S 54713-S 54725-S 54737-S	54702-S 54714-S 54726-S 54738-S	54703-S 54715-S 54727-S 54739-S	54704-S 54716-S 54728-S 54740-S	54705-S 54717-S 54729-S 54741-S	54706-S 54718-S 54730-S 54742-S	54707-S 54719-S 54731-S 54743-S	54708-S 54720-S 54732-S 54744-S
	1 1/4 1 3/8 1 1/2 1 5/8	54745-S 54757-S 54769-S 54781-S	54746-S 54758-S 54770-S 54782-S	54747-S 54759-S 54771-S 54783-S	54748-S 54760-S 54772-S 54784-S	54749-S 54761-S 54773-S 54785-S	54750-S 54762-S 54774-S 54786-S	54751-S 54763-S 54775-S 54787-S	54752-S 54764-S 54776-S 54788-S	54753-S 54765-S 54777-S 54789-S	54754-S 54766-S 54778-S 54790-S	54755-S 54767-S 54779-S 54791-S	54756-S 54768-S 54780-S 54792-S
	1 3/4 1 7/8 2 2 1/8	54793-S	54794-S	54795-S	54796-S 54805-S 54814-S 54823-S	54797-S 54806-S 54815-S 54824-S	54798-S 54807-S 54816-S 54825-S	54799-S 54808-S 54817-S 54826-S	54800-S 54809-S 54818-S 54827-S	54801-S 54810-S 54819-S 54828-S	54802-S 54811-S 54820-S 54829-S	54803-S 54812-S 54821-S 54830-S	54804-S 54813-S 54822-S 54831-S
	2 1/4 2 3/8 2 1/2				54832-S	54833-S	54834-S	54835-S 54841-S 54847-S	54836-S 54842-S 54848-S	54837-S 54843-S 54849-S	54838-S 54844-S 54850-S	54839-S 54845-S 54851-S	54840-S 54846-S 54852-S

NOTES: For General Specifications see Page C-950.01. For Finishes see Section "Z" Addendum.
Indentation optional with manufacturer. Shape of indentation shall not impair function of part.

FORD MOTOR COMPANY
STANDARD PARTS

MACHINE SCREWS
HEXAGON HEAD

CLASS 2A

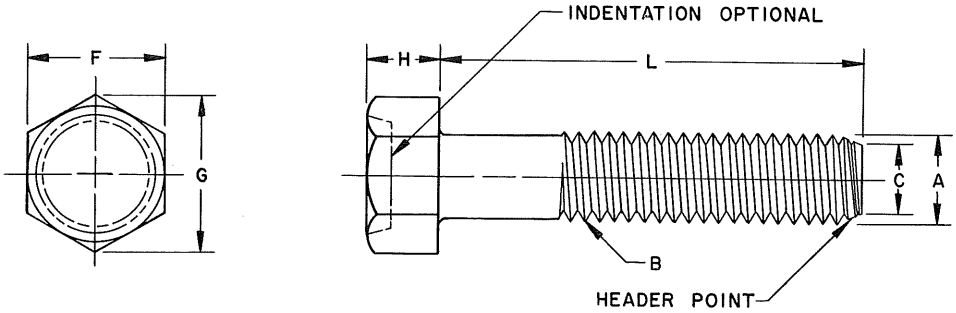

	Screw Size	4	6	8	10		12	1/4		5/16		3/8	
B	Threads Per Inch	40	32	32	24	32	24	20	28	18	24	16	24
A	Major Dia. of Thread	.1112 .1061	.1372 .1312	.1631 .1571	.1890 .1818	.1891 .1831	.2150 .2078	.2489 .2408	.2490 .2425	.3113 .3026	.3114 .3042	.3737 .3643	.3739 .3667
	Pitch Dia. of Thread	.0950 .0925	.1169 .1141	.1428 .1399	.1619 .1586	.1688 .1658	.1879 .1845	.2164 .2127	.2258 .2225	.2752 .2712	.2843 .2806	.3331 .3287	.3468 .3430
	Pitch Dia. of Thread When Plated (Max.)	.0958	.1177	.1437	.1629	.1697	.1889	.2175	.2268	.2764	.2854	.3344	.3479
C	Minor Dia. of Thread (Max.)	.0805	.0989	.1248	.1379	.1508	.1639	.1876	.2052	.2431	.2603	.2970	.3228
F	Width Across Flats	.187 .181	.250 .244	.250 .244	.312 .305	.312 .305	.312 .305	.375 .367	.375 .367	.500 .489	.500 .489	.562 .551	.562 .551
G	Width Across Corners (Min)	.202	.272	.272	.340	.340	.340	.409	.409	.545	.545	.614	.614
H	Head Height	.060 .049	.093 .080	.110 .096	.120 .105	.120 .105	.155 .139	.190 .172	.190 .172	.230 .208	.230 .208	.295 .270	.295 .270
	MATERIAL	Steel M 3422-A					FORD PART NUMBERS						
L	3/16	54853-S	54854-S	54855-S	54856-S	54857-S	54858-S						
	1/4 5/16 3/8 7/16	54859-S 54865-S 54871-S 54881-S	54860-S 54866-S 54872-S 54882-S	54861-S 54867-S 54873-S 54883-S	54862-S 54868-S 54874-S 54884-S	54863-S 54869-S 54875-S 54885-S	54864-S 54870-S 54876-S 54886-S	54877-S 54887-S	54878-S 54888-S	54879-S 54889-S	54880-S 54890-S		
L	1/2 9/16 5/8 11/16	54891-S 54903-S 54915-S 54927-S	54892-S 54904-S 54916-S 54928-S	54893-S 54905-S 54917-S 54929-S	54894-S 54906-S 54918-S 54930-S	54895-S 54907-S 54919-S 54931-S	54896-S 54908-S 54920-S 54932-S	54897-S 54909-S 54921-S 54933-S	54898-S 54910-S 54922-S 54934-S	54899-S 54911-S 54923-S 54935-S	54900-S 54912-S 54924-S 54936-S	54901-S 54913-S 54925-S 54937-S	54902-S 54914-S 54926-S 54938-S
E	3/4 7/8 1 1 1/8	54939-S 54951-S 54963-S 54975-S	54940-S 54952-S 54964-S 54976-S	54941-S 54953-S 54965-S 54977-S	54942-S 54954-S 54966-S 54978-S	54943-S 54955-S 54967-S 54979-S	54944-S 54956-S 54968-S 54980-S	54945-S 54957-S 54969-S 54981-S	54946-S 54958-S 54970-S 54982-S	54947-S 54959-S 54971-S 54983-S	54948-S 54960-S 54972-S 54984-S	54949-S 54961-S 54973-S 54985-S	54950-S 54962-S 54974-S 54986-S
N	1 1/4 1 3/8 1 1/2 1 5/8	54987-S 54999-S 55011-S 55023-S	54988-S 55000-S 55012-S 55024-S	54989-S 55001-S 55013-S 55025-S	54990-S 55002-S 55014-S 55026-S	54991-S 55003-S 55015-S 55027-S	54992-S 55004-S 55016-S 55028-S	54993-S 55005-S 55017-S 55029-S	54994-S 55006-S 55018-S 55030-S	54995-S 55007-S 55019-S 55031-S	54996-S 55008-S 55020-S 55032-S	54997-S 55009-S 55021-S 55033-S	54998-S 55010-S 55022-S 55034-S
G	1 3/4 1 7/8 2 2 1/8	55035-S	55036-S	55037-S	55038-S 55047-S 55056-S 55065-S	55039-S 55048-S 55057-S 55066-S	55040-S 55049-S 55058-S 55067-S	55041-S 55050-S 55059-S 55068-S	55042-S 55051-S 55060-S 55069-S	55043-S 55052-S 55061-S 55070-S	55044-S 55053-S 55062-S 55071-S	55045-S 55054-S 55063-S 55072-S	55046-S 55055-S 55064-S 55073-S
T	2 1/4 2 3/8 2 1/2				55074-S	55075-S	55076-S	55077-S 55083-S 55089-S	55078-S 55084-S 55090-S	55079-S 55085-S 55091-S	55080-S 55086-S 55092-S	55081-S 55087-S 55093-S	55082-S 55088-S 55094-S
H													

NOTES: For General Specifications see Page C-950.01. For Finishes see Section "Z" Addendum.
For Header Point Specifications see General Specifications.
Indentation optional with manufacturer. Shape of indentation shall not impair function of part.

FORD MOTOR COMPANY
STANDARD PARTS

SCREW & SPRING LOCK WASHER ASSEMBLIES
HEXAGON HEAD

CLASS 2A

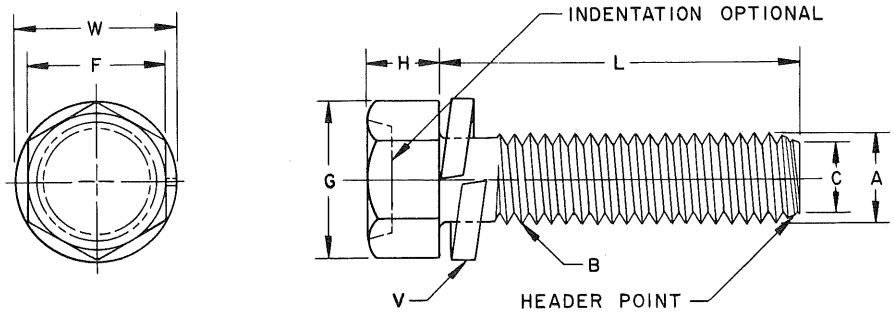

	Screw Size	8	10		12	1/4		5/16		3/8	
B	Threads Per Inch	32	24	32	24	20	28	18	24	16	24
A	Major Dia of Thread	.1631 .1571	.1890 .1818	.1891 .1831	.2150 .2078	.2489 .2408	.2490 .2425	.3113 .3026	.3114 .3042	.3737 .3643	.3739 .3667
	Pitch Dia of Thread	.1428 .1399	.1619 .1586	.1688 .1658	.1879 .1845	.2164 .2127	.2258 .2225	.2752 .2712	.2843 .2806	.3331 .3287	.3468 .3430
	Pitch Dia of Thread When Plated (Max.)	.1437	.1629	.1697	.1889	.2175	.2268	.2764	.2854	.3344	.3479
C	Minor Dia of Thread (Max.)	.1248	.1379	.1508	.1639	.1876	.2052	.2431	.2603	.2970	.3228
F	Width Across Flats	.312 .305	.312 .305	.312 .305	.375 .367	.437 .428	.437 .428	.500 .489	.500 .489	.562 .551	.562 .551
G	Width Across Corners (Min.)	.340	.340	.340	.409	.477	.477	.545	.545	.614	.614
H	Head Height	.110 .096	.120 .105	.120 .105	.155 .139	.190 .172	.190 .172	.230 .208	.230 .208	.295 .270	.295 .270
W	Washer Diameter	.257 .243	.311 .297	.311 .297	.335 .320	.464 .448	.464 .448	.556 .540	.556 .540	.651 .635	.651 .635
V	Washer Thickness (Min.)	.031	.047	.047	.047	.062	.062	.078	.078	.094	.094
	MATERIAL	See Notes				FORD PART NUMBERS					
LENGTH	1/4 3/8 1/2	43481-S 43484-S 43488-S	54445-S 54446-S 54447-S	43482-S 43485-S 42717-S	43483-S 43486-S 43489-S	43487-S 43260-S	43375-S 42907-S	42718-S	43490-S	43491-S	43492-S
	5/8 3/4 7/8 1	43493-S 43498-S 43372-S 43508-S	54448-S ~~54449-S~~ 54450-S 54451-S	43494-S 43499-S 43503-S 43509-S	43495-S 43500-S 43504-S 43510-S	43263-S 42906-S 43261-S 43511-S	42904-S 43501-S 43505-S 43512-S	42719-S 42789-S 42846-S 42847-S	42908-S 42905-S 43264-S 43513-S	43496-S 43265-S 43506-S 43514-S	43497-S 43502-S 43507-S 43374-S
	1 1/8 1 1/4 1 3/8 1 1/2				43515-S 43521-S	43516-S 43522-S	43517-S 43523-S	42848-S 43524-S	43518-S 43525-S	43519-S 43526-S 43528-S 43530-S	43520-S 43527-S 43529-S 43531-S

NOTES: For General Specifications see Page C-950.01. For Finishes see Section "Z" Addendum.
MATERIAL: Screw - Steel; M-3422-A. Washer - Steel; SAE 1060, SAE 1065 or SAE 1070, heat treated to Rockwell C45 to C53.

FORD MOTOR COMPANY
STANDARD PARTS

SCREW & EXTERNAL TOOTH WASHER ASSEMBLIES
HEXAGON HEAD

CLASS 2A

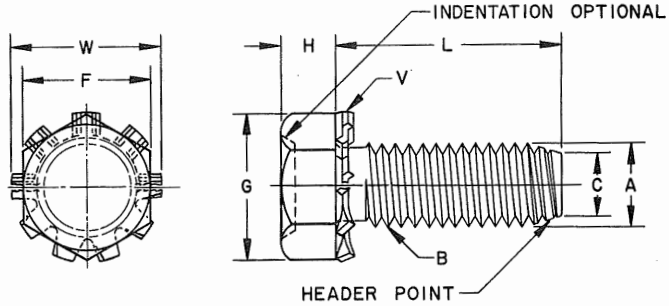

	Screw Size	8	10		12	1/4		5/16		3/8	
B	Threads Per Inch	32	24	32	24	20	28	18	24	16	24
A	Major Dia of Thread	.1631 .1571	.1890 .1818	.1891 .1831	.2150 .2078	.2489 .2408	.2490 .2425	.3113 .3026	.3114 .3042	.3737 .3643	.3739 .3667
	Pitch Dia of Thread	.1428 .1399	.1619 .1586	.1688 .1658	.1879 .1845	.2164 .2127	.2258 .2225	.2752 .2712	.2843 .2806	.3331 .3287	.3468 .3430
	Pitch Dia of Thread When Plated (Max.)	.1437	.1629	.1697	.1889	.2175	.2268	.2764	.2854	.3344	.3479
C	Minor Dia of Thread (Max.)	.1248	.1379	.1508	.1639	.1876	.2052	.2431	.2603	.2970	.3228
F	Width Across Flats	.312 .305	.312 .305	.312 .305	.375 .367	.437 .428	.437 .428	.500 .489	.500 .489	.562 .551	.562 .551
G	Width Across Corners (Min.)	.340	.340	.340	.409	.477	.477	.545	.545	.614	.614
H	Head Height	.110 .096	.120 .105	.120 .105	.155 .139	.190 .172	.190 .172	.230 .208	.230 .208	.295 .270	.295 .270
W	Washer Diameter	.320 .305	.381 .365	.381 .365	.410 .395	.475 .460	.475 .460	.590 .567	.590 .567	.660 .640	.660 .640
V	Washer Thickness	.023 .018	.025 .020	.025 .020	.027 .020	.028 .023	.028 .023	.034 .028	.034 .028	.040 .032	.040 .032
	MATERIAL	See Notes				FORD PART NUMBERS					
LENGTH	1/4 3/8 1/2	42720-S 42721-S 42722-S	54594-S 54595-S 54596-S	42849-S 42727-S 42728-S	42734-S 42735-S	42741-S 42742-S	42749-S 42750-S	42757-S	42764-S	42771-S	42780-S
	5/8 3/4 7/8 1	42723-S 42724-S 42725-S 42726-S	54597-S 54598-S 54599-S 54600-S	42729-S 42730-S 42731-S 42732-S	42736-S 42737-S 42738-S 42739-S	42743-S 42744-S 42745-S 42746-S	42751-S 42752-S 42753-S 42754-S	42758-S 42759-S 42760-S 42761-S	42765-S 42766-S 42767-S 42768-S	42772-S 42773-S 42774-S 42775-S	42781-S 42782-S 42783-S 42784-S
	1 1/8 1 1/4 1 3/8 1 1/2		54601-S 54602-S	42733-S 43316-S	42740-S	42747-S 42748-S	42755-S 42756-S	42762-S 42763-S	42769-S 42770-S	42776-S 42777-S 42778-S 42779-S	42785-S 42786-S 42787-S 42788-S

NOTES: For General Specifications see Page C-950.01. For Finishes see Section "Z" Addendum.
MATERIAL: Screw - Steel; M-3422-A. Washer - Steel; SAE 1050, SAE 1060 or SAE 1065, heat treated to Rockwell C40 to C50.
For Header Point Specifications see General Specifications.
Indentation optional with manufacturer. Shape of indentation shall not impair function of part.

FORD MOTOR COMPANY
STANDARD PARTS

MACHINE SCREWS
HEXAGON WASHER HEAD

CLASS 2A

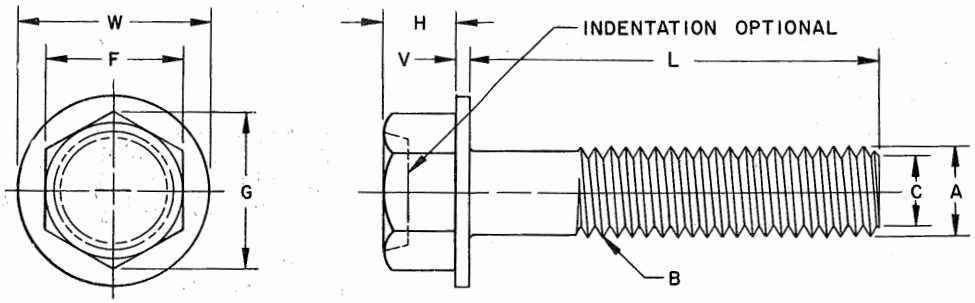

	Screw Size	4	6	8	10		12	1/4		5/16		3/8	
B	Threads Per Inch	40	32	32	24	32	24	20	28	18	24	16	24
A	Major Dia of Thread	.1112 .1061	.1372 .1312	.1631 .1571	.1890 .1818	.1891 .1831	.2150 .2078	.2489 .2408	.2490 .2425	.3113 .3026	.3114 .3042	.3737 .3643	.3739 .3667
	Pitch Dia of Thread	.0950 .0925	.1169 .1141	.1428 .1399	.1619 .1586	.1688 .1658	.1879 .1845	.2164 .2127	.2258 .2225	.2752 .2712	.2843 .2806	.3331 .3287	.3468 .3430
	Pitch Dia of Thread When Plated (Max.)	.0958	.1177	.1437	.1629	.1697	.1889	.2175	.2268	.2764	.2854	.3344	.3479
C	Minor Dia of Thread (Max.)	.0805	.0989	.1248	.1379	.1508	.1639	.1876	.2052	.2431	.2603	.2970	.3228
F	Width Across Flats	.187 .181	.250 .244	.250 .244	.312 .305	.312 .305	.312 .305	.375 .367	.375 .367	.500 .489	.500 .489	.562 .551	.562 .551
G	Width Across Corners (Min.)	.202	.272	.272	.340	.340	.340	.409	.409	.545	.545	.614	.614
H	Head Height	.060 .049	.093 .080	.110 .096	.120 .105	.120 .105	.155 .139	.190 .172	.190 .172	.230 .208	.230 .208	.295 .270	.295 .270
W	Washer Diameter	.243 .225	.328 .302	.348 .322	.414 .384	.414 .384	.432 .398	.520 .480	.520 .480	.676 .624	.676 .624	.780 .720	.780 .720
V	Washer Thickness	.019 .011	.025 .015	.031 .019	.031 .019	.031 .019	.039 .022	.050 .030	.050 .030	.055 .035	.055 .035	.063 .037	.063 .037
	MATERIAL	Steel M 3422-A					FORD PART NUMBERS						
L	3/16	55095-S	55096-S	55097-S	55098-S	55099-S	55100-S						
	1/4, 5/16, 3/8, 7/16	55101-S 55107-S 55113-S 55123-S	55102-S 55108-S 55114-S 55124-S	55103-S 55109-S 55115-S 55125-S	55104-S 55110-S 55116-S 55126-S	55105-S 55111-S 55117-S 55127-S	55106-S 55112-S 55118-S 55128-S	55119-S 55129-S	55120-S 55130-S	55121-S 55131-S	55122-S 55132-S		
	1/2, 9/16, 5/8, 11/16	55133-S 55145-S 55157-S 55169-S	55134-S 55146-S 55158-S 55170-S	55135-S 55147-S 55159-S 55171-S	55136-S 55148-S 55160-S 55172-S	55137-S 55149-S 55161-S 55173-S	55138-S 55150-S 55162-S 55174-S	55139-S 55151-S 55163-S 55175-S	55140-S 55152-S 55164-S 55176-S	55141-S 55153-S 55165-S 55177-S	55142-S 55154-S 55166-S 55178-S	55143-S 55155-S 55167-S 55179-S	55144-S 55156-S 55168-S 55180-S
	3/4, 7/8, 1, 1 1/8	55181-S 55193-S 55205-S 55217-S	55182-S 55194-S 55206-S 55218-S	55183-S 55195-S 55207-S 55219-S	55184-S 55196-S 55208-S 55220-S	55185-S 55197-S 55209-S 55221-S	55186-S 55198-S 55210-S 55222-S	55187-S 55199-S 55211-S 55223-S	55188-S 55200-S 55212-S 55224-S	55189-S 55201-S 55213-S 55225-S	55190-S 55202-S 55214-S 55226-S	55191-S 55203-S 55215-S 55227-S	55192-S 55204-S 55216-S 55228-S
	1 1/4, 1 3/8, 1 1/2, 1 5/8	55229-S 55241-S 55253-S 55265-S	55230-S 55242-S 55254-S 55266-S	55231-S 55243-S 55255-S 55267-S	55232-S 55244-S 55256-S 55268-S	55233-S 55245-S 55257-S 55269-S	55234-S 55246-S 55258-S 55270-S	55235-S 55247-S 55259-S 55271-S	55236-S 55248-S 55260-S 55272-S	55237-S 55249-S 55261-S 55273-S	55238-S 55250-S 55262-S 55274-S	55239-S 55251-S 55263-S 55275-S	55240-S 55252-S 55264-S 55276-S
	1 3/4, 1 7/8, 2, 2 1/8	55277-S	55278-S	55279-S	55280-S 55289-S 55298-S 55307-S	55281-S 55290-S 55299-S 55308-S	55282-S 55291-S 55300-S 55309-S	55283-S 55292-S 55301-S 55310-S	55284-S 55293-S 55302-S 55311-S	55285-S 55294-S 55303-S 55312-S	55286-S 55295-S 55304-S 55313-S	55287-S 55296-S 55305-S 55314-S	55288-S 55297-S 55306-S 55315-S
	2 1/4, 2 3/8, 2 1/2				55316-S	55317-S	55318-S	55319-S 55325-S 55331-S	55320-S 55326-S 55332-S	55321-S 55327-S 55333-S	55322-S 55328-S 55334-S	55323-S 55329-S 55335-S	55324-S 55330-S 55336-S

Recommended Finish: S8. For other Finishes see Section "Z" Addendum.
For General Specifications see Page C-950.01.
Maximum radius allowed at junction of sides of hex and washer shall be .15 times the Basic Major Diameter.
Indentation optional with manufacturer. Shape of indentation shall not impair function of part.

FORD MOTOR COMPANY
STANDARD PARTS

MACHINE SCREWS
HEXAGON WASHER HEAD

CLASS 2A

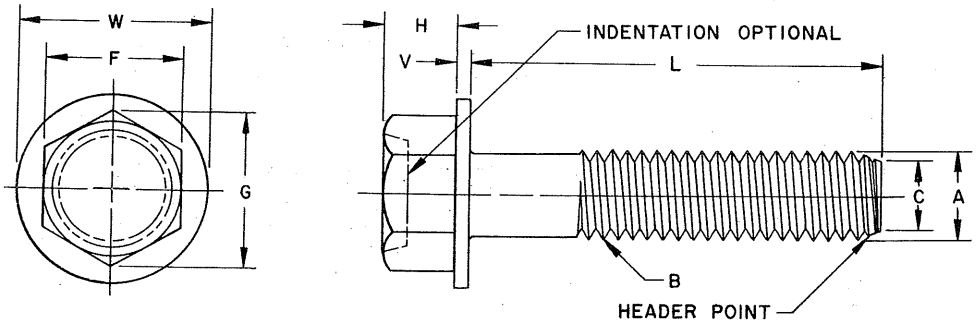

	Screw Size	4	6	8	10		12	1/4		5/16		3/8	
B	Threads Per Inch	40	32	32	24	32	24	20	28	18	24	16	24
A	Major Dia of Thread	.1112 .1061	.1372 .1312	.1631 .1571	.1890 .1818	.1891 .1831	.2150 .2078	.2489 .2408	.2490 .2425	.3113 .3026	.3114 .3042	.3737 .3643	.3739 .3667
	Pitch Dia of Thread	.0950 .0925	.1169 .1141	.1428 .1399	.1619 .1586	.1688 .1658	.1879 .1845	.2164 .2127	.2258 .2225	.2752 .2712	.2843 .2806	.3331 .3287	.3468 .3430
	Pitch Dia of Thread When Plated (Max.)	.0958	.1177	.1437	.1629	.1697	.1889	.2175	.2268	.2764	.2854	.3344	.3479
C	Minor Dia of Thread (Max)	.0805	.0989	.1248	.1379	.1508	.1639	.1876	.2052	.2431	.2603	.2970	.3228
F	Width Across Flats	.187 .181	.250 .244	.250 .244	.312 .305	.312 .305	.312 .305	.375 .367	.375 .367	.500 .489	.500 .489	.562 .551	.562 .551
G	Width Across Corners (Min)	.202	.272	.272	.340	.340	.340	.409	.409	.545	.545	.614	.614
H	Head Height	.060 .049	.093 .080	.110 .096	.120 .105	.120 .105	.155 .139	.190 .172	.190 .172	.230 .208	.230 .208	.295 .270	.295 .270
W	Washer Diameter	.243 .225	.328 .302	.348 .322	.414 .384	.414 .384	.432 .398	.520 .480	.520 .480	.676 .624	.676 .624	.780 .720	.780 .720
V	Washer Thickness	.019 .011	.025 .015	.031 .019	.031 .019	.031 .019	.039 .022	.050 .030	.050 .030	.055 .035	.055 .035	.063 .037	.063 .037
	MATERIAL	Steel M 3422-A					FORD PART NUMBERS						
L	3/16	55337-S	55338-S	55339-S	55340-S	55341-S	55342-S						
	1/4, 5/16, 3/8, 7/16	55343-S 55349-S 55355-S 55365-S	55344-S 55350-S 55356-S 55366-S	55345-S 55351-S 55357-S 55367-S	55346-S 55352-S 55358-S 55368-S	55347-S 55353-S 55359-S 55369-S	55348-S 55354-S 55360-S 55370-S	55361-S 55371-S	55362-S 55372-S	55363-S 55373-S	55364-S 55374-S		
	1/2, 9/16, 5/8, 11/16	55375-S 55387-S 55399-S 55411-S	55376-S 55388-S 55400-S 55412-S	55377-S 55389-S 55401-S 55413-S	55378-S 55390-S 55402-S 55414-S	55379-S 55391-S 55403-S 55415-S	55380-S 55392-S 55404-S 55416-S	55381-S 55393-S 55405-S 55417-S	55382-S 55394-S 55406-S 55418-S	55383-S 55395-S 55407-S 55419-S	55384-S 55396-S 55408-S 55420-S	55385-S 55397-S 55409-S 55421-S	55386-S 55398-S 55410-S 55422-S
LENGTH	3/4, 7/8, 1, 1 1/8	55423-S 55435-S 55447-S 55459-S	55424-S 55436-S 55448-S 55460-S	55425-S 55437-S 55449-S 55461-S	55426-S 55438-S 55450-S 55462-S	55427-S 55439-S 55451-S 55463-S	55428-S 55440-S 55452-S 55464-S	55429-S 55441-S 55453-S 55465-S	55430-S 55442-S 55454-S 55466-S	55431-S 55443-S 55455-S 55467-S	55432-S 55444-S 55456-S 55468-S	55433-S 55445-S 55457-S 55469-S	55434-S 55446-S 55458-S 55470-S
	1 1/4, 1 3/8, 1 1/2, 1 5/8	55471-S 55483-S 55495-S 55507-S	55472-S 55484-S 55496-S 55508-S	55473-S 55485-S 55497-S 55509-S	55474-S 55486-S 55498-S 55510-S	55475-S 55487-S 55499-S 55511-S	55476-S 55488-S 55500-S 55512-S	55477-S 55489-S 55501-S 55513-S	55478-S 55490-S 55502-S 55514-S	55479-S 55491-S 55503-S 55515-S	55480-S 55492-S 55504-S 55516-S	55481-S 55493-S 55505-S 55517-S	55482-S 55494-S 55506-S 55518-S
	1 3/4, 1 7/8, 2, 2 1/8	55519-S	55520-S	55521-S	55522-S 55531-S 55540-S 55549-S	55523-S 55532-S 55541-S 55550-S	55524-S 55533-S 55542-S 55551-S	55525-S 55534-S 55543-S 55552-S	55526-S 55535-S 55544-S 55553-S	55527-S 55536-S 55545-S 55554-S	55528-S 55537-S 55546-S 55555-S	55529-S 55538-S 55547-S 55556-S	55530-S 55539-S 55548-S 55557-S
	2 1/4, 2 3/8, 2 1/2				55558-S	55559-S	55560-S	55561-S 55567-S 55573-S	55562-S 55568-S 55574-S	55563-S 55569-S 55575-S	55564-S 55570-S 55576-S	55565-S 55571-S 55577-S	55566-S 55572-S 55578-S

Recommended Finish: S8. For other Finishes see Section "Z" Addendum.
For General Specifications see Page C-950.01.
Maximum radius allowed at junction of sides of hex and washer shall be .15 times the Basic Major Diameter.
Indentation optional with manufacturer. Shape of indentation shall not impair function of part.
For Header Point Specifications see General Specifications.

FORD MOTOR COMPANY
STANDARD PARTS

SCREW & EXTERNAL TOOTH WASHER ASSEMBLIES — CLASS 2A
HEXAGON WASHER HEAD

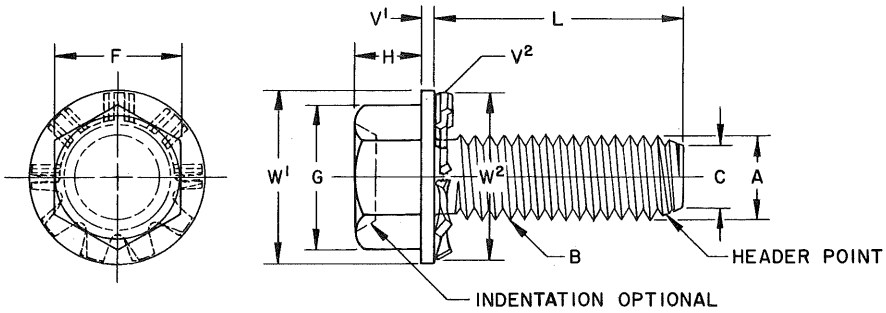

	Screw Size	8	10		12	1/4		5/16		3/8	
B	Threads Per Inch	32	24	32	24	20	28	18	24	16	24
A	Major Dia of Thread	.1631 .1571	.1890 .1818	.1891 .1831	.2150 .2078	.2489 .2408	.2490 .2425	.3113 .3026	.3114 .3042	.3737 .3643	.3739 .3667
	Pitch Dia of Thread	.1428 .1399	.1619 .1586	.1688 .1658	.1879 .1845	.2164 .2127	.2258 .2225	.2752 .2712	.2843 .2806	.3331 .3287	.3468 .3430
	Pitch Dia of Thread When Plated (Max.)	.1437	.1629	.1697	.1889	.2175	.2268	.2764	.2854	.3344	.3479
C	Minor Dia of Thread (Max.)	.1248	.1379	.1508	.1639	.1876	.2052	.2431	.2603	.2970	.3228
F	Width Across Flats	.250 .244	.312 .305	.312 .305	.312 .305	.375 .367	.375 .367	.500 .489	.500 .489	.562 .551	.562 .551
G	Width Across Corners (Min.)	.272	.340	.340	.340	.409	.409	.545	.545	.614	.614
H	Head Height	.110 .096	.120 .105	.120 .105	.155 .139	.190 .172	.190 .172	.230 .208	.230 .208	.295 .270	.295 .270
W¹	Washer Diameter	.348 .322	.414 .384	.414 .384	.432 .398	.520 .480	.520 .480	.676 .624	.676 .624	.780 .720	.780 .720
W²	Washer Diameter	.317 .306	.406 .395	.406 .395	.406 .395	.580 .567	.580 .567	.654 .640	.654 .640	.760 .740	.760 .740
V¹	Washer Thickness	.031 .019	.031 .019	.031 .019	.039 .022	.050 .030	.050 .030	.055 .035	.055 .035	.063 .037	.063 .037
V²	Washer Thickness	.023 .018	.025 .020	.025 .020	.027 .020	.028 .023	.028 .023	.034 .028	.034 .028	.040 .032	.040 .032
	MATERIAL	See Notes				FORD PART NUMBERS					
L	1/4 3/8 1/2	55579-S 55583-S 55589-S	55580-S 55584-S 55599-S	55581-S 55585-S 55591-S	55582-S 55586-S 55592-S	55587-S 55593-S	55588-S 55594-S	55595-S	55596-S	55597-S	55598-S
LENGTH	5/8 3/4 7/8 1	55599-S 55609-S 55619-S 55629-S	55600-S 55610-S 55620-S 55630-S	55601-S 55611-S 55621-S 55631-S	55602-S 55612-S 55622-S 55632-S	55603-S 55613-S 55623-S 55633-S	55604-S 55614-S 55624-S 55634-S	55605-S 55615-S 55625-S 55635-S	55606-S 55616-S 55626-S 55636-S	55607-S 55617-S 55627-S 55637-S	55608-S 55618-S 55628-S 55638-S
	1 1/8 1 1/4 1 3/8 1 1/2		55639-S 55648-S	55640-S 55649-S	55641-S 55650-S	55642-S 55651-S 55657-S 55663-S	55643-S 55652-S 55658-S 55664-S	55644-S 55653-S 55659-S 55665-S	55645-S 55654-S 55660-S 55666-S	55646-S 55655-S 55661-S 55667-S	55647-S 55656-S 55662-S 55668-S

Recommended Finish: S8. For other Finishes see Section "Z" Addendum.
MATERIAL: Screw - Steel; M-3422-A. Washer - Steel; SAE 1050, SAE 1060 or SAE 1065, heat treated to Rockwell C40 to C50.
For General Specifications see Page C-950.01.
For Header Point Specifications see General Specifications.
Maximum radius allowed at junction of sides of hex and washer shall be .15 times the Basic Major Diameter.
Indentation optional with manufacturer. Shape of indentation shall not impair function of part.

FORD MOTOR COMPANY
STANDARD PARTS

MACHINE SCREWS
OVAL HEAD

SLOTTED
CLASS 2A

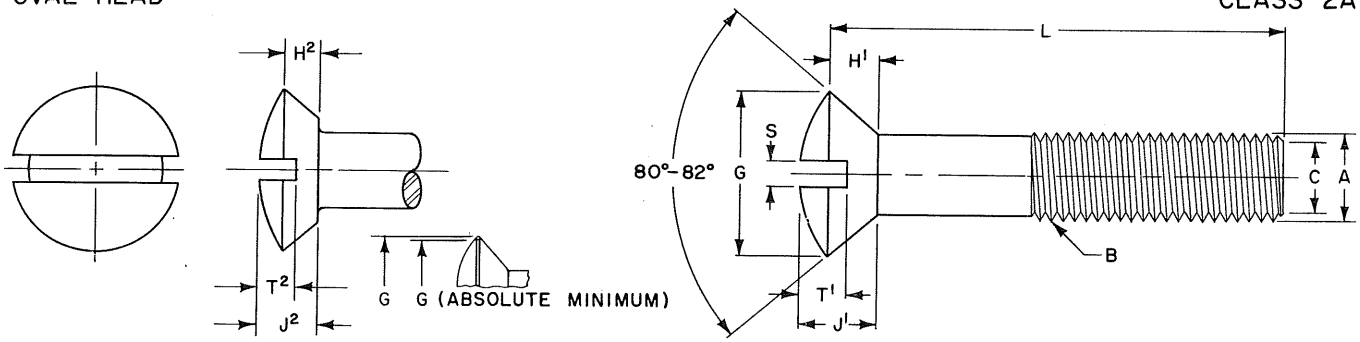

	Screw Size	4	6	8	10		12	1/4		5/16		3/8	
B	Threads Per Inch	40	32	32	24	32	24	20	28	18	24	16	24
A	Major Dia of Thread	.1112 .1061	.1372 .1312	.1631 .1571	.1890 .1818	.1891 .1831	.2150 .2078	.2489 .2408	.2490 .2425	.3113 .3026	.3114 .3042	.3737 .3643	.3739 .3667
	Pitch Dia of Thread	.0950 .0925	.1169 .1141	.1428 .1399	.1619 .1586	.1688 .1658	.1879 .1845	.2164 .2127	.2258 .2225	.2752 .2712	.2843 .2806	.3331 .3287	.3468 .3430
	Pitch Dia of Thread When Plated (Max.)	.0958	.1177	.1437	.1629	.1697	.1889	.2175	.2268	.2764	.2854	.3344	.3479
C	Minor Dia of Thread (Max.)	.0805	.0989	.1248	.1379	.1508	.1639	.1876	.2052	.2431	.2603	.2970	.3228
G	Head Dia (Max. Sharp) (Min. Sharp) (Abs. Min.)	.225 .207 .195	.279 .257 .244	.332 .308 .292	.385 .359 .340	.385 .359 .340	.438 .410 .389	.507 .477 .452	.507 .477 .452	.635 .600 .568	.635 .600 .568	.762 .722 .685	.762 .722 .685
H^1	Side Height (Ref.)	.067	.083	.100	.116	.116	.132	.153	.153	.191	.191	.230	.230
H^2	Side Height (Ref.)	.047	.059	.070	.081	.081	.092	.107	.107	.134	.134	.161	.161
J^1	Total Head Height	.104 .084	.128 .105	.152 .126	.176 .148	.176 .148	.200 .169	.232 .197	.232 .197	.290 .249	.290 .249	.347 .300	.347 .300
J^2	Total Head Height	.084 .067	.104 .084	.123 .101	.142 .118	.142 .118	.161 .135	.186 .158	.186 .158	.232 .198	.232 .198	.278 .239	.278 .239
S	Slot Width	.039 .031	.048 .039	.054 .045	.060 .050	.060 .050	.067 .056	.075 .064	.075 .064	.084 .072	.084 .072	.094 .081	.094 .081
T^1	Slot Depth	.059 .049	.074 .060	.088 .072	.103 .084	.103 .084	.117 .096	.136 .112	.136 .112	.171 .141	.171 .141	.206 .170	.206 .170
T^2	Slot Depth	.053 .043	.065 .053	.078 .064	.090 .074	.090 .074	.103 .085	.119 .098	.119 .098	.149 .124	.149 .124	.179 .149	.179 .149
	MATERIAL	Steel M 3422-A					FORD PART NUMBERS						
L	3/16	28300-S	28301-S	28302-S	53929-S	28903-S	28304-S						
	1/4	28305-S	28306-S	28307-S	53930-S	28908-S	28309-S						
	5/16	28310-S	28311-S	28312-S	53931-S	28913-S	28314-S						
	3/8	28315-S	28316-S	28317-S	53932-S	28918-S	28319-S						
	7/16	28320-S	28321-S	28322-S	53933-S	28923-S	28324-S	28325-S	28925-S	28326-S	28926-S	28327-S	28927-S
	1/2	28328-S	28329-S	28330-S	53934-S	28931-S	28332-S	28333-S	28933-S	28334-S	28934-S	28335-S	28935-S
	9/16	28336-S	28337-S	28338-S	53935-S	28939-S	28340-S	28341-S	28941-S	28342-S	28942-S	28343-S	28943-S
	5/8	28344-S	28345-S	28346-S	53936-S	28947-S	28348-S	28349-S	28949-S	28350-S	28950-S	28351-S	28951-S
	11/16	28352-S	28353-S	28354-S	53937-S	28955-S	28356-S	28357-S	28957-S	28358-S	28958-S	28359-S	28959-S
	3/4	28360-S	28361-S	28362-S	53938-S	28963-S	28364-S	28365-S	28965-S	28366-S	28966-S	28367-S	28967-S
	7/8	28376-S	28377-S	28378-S	53939-S	28979-S	28380-S	28381-S	28981-S	28382-S	28982-S	28383-S	28983-S
	1	28392-S	28393-S	28394-S	53940-S	28995-S	28396-S	28397-S	28997-S	28398-S	28998-S	28399-S	28999-S
	1 1/8	28400-S	28401-S	28402-S	53941-S	29003-S	28404-S	28405-S	29005-S	28406-S	29006-S	28407-S	29007-S
	1 1/4	28408-S	28409-S	28410-S	53942-S	29011-S	28412-S	28413-S	29013-S	28414-S	29014-S	28415-S	29015-S
	1 3/8	28416-S	28417-S	28418-S	53943-S	29019-S	28420-S	28421-S	29021-S	28422-S	29022-S	28423-S	29023-S
	1 1/2	28424-S	28425-S	28426-S	53944-S	29027-S	28428-S	28429-S	29029-S	28430-S	29030-S	28431-S	29031-S
	1 5/8	28432-S	28433-S	28434-S	53945-S	29035-S	28436-S	28437-S	29037-S	28438-S	29038-S	28439-S	29039-S
	1 3/4	28440-S	28441-S	28442-S	53946-S	29043-S	28444-S	28445-S	29045-S	28446-S	29046-S	28447-S	29047-S
	1 7/8	28448-S	28449-S	28450-S	53947-S	29051-S	28452-S	28453-S	29053-S	28454-S	29054-S	28455-S	29055-S
	2	28456-S	28457-S	28458-S	53948-S	29059-S	28460-S	28461-S	29061-S	28462-S	29062-S	28463-S	29063-S
	2 1/8	28464-S	28465-S	28466-S	53949-S	29067-S	28468-S	28469-S	29069-S	28470-S	29070-S	28471-S	29071-S
	2 1/4	28472-S	28473-S	28474-S	53950-S	29075-S	28476-S	28477-S	29077-S	28478-S	29078-S	28479-S	29079-S
	2 3/8	28480-S	28481-S	28482-S	53951-S	29083-S	28484-S	28485-S	29085-S	28486-S	29086-S	28487-S	29087-S
	2 1/2	28488-S	28489-S	28490-S	53952-S	29091-S	28492-S	28493-S	29093-S	29494-S	29094-S	28495-S	29095-S
	2 5/8	28496-S	28497-S	28498-S	53953-S	29099-S	28500-S	28501-S	29101-S	28502-S	29102-S	28503-S	29103-S
	2 3/4	28504-S	28505-S	28506-S	53954-S	29107-S	28508-S	28509-S	29109-S	28510-S	29110-S	28511-S	29111-S
	3	28512-S	28513-S	28514-S	53955-S	29115-S	28516-S	28517-S	29117-S	28518-S	29118-S	28519-S	29119-S
	3 1/4	28520-S	28521-S	28522-S	53956-S	29123-S	28524-S	29525-S	29125-S	28526-S	29126-S	28527-S	29127-S
	3 1/2	28528-S	28529-S	28530-S	53957-S	29131-S	28532-S	28533-S	29133-S	28534-S	29134 S	28535-S	29135-S
	3 3/4	28536-S	28537-S	28538-S	53958-S	29139-S	28540-S	28541-S	29141-S	28542-S	29142-S	28543-S	29143-S
	4	28544-S	28545-S	28546-S	53959-S	29147-S	28548-S	28549-S	29149-S	28550-S	29150-S	28551-S	29151-S
	4 1/4	28552-S	28553-S	28554-S	53960-S	29155-S	28556-S	28557-S	29157-S	28558-S	29158-S	28559-S	29159-S
	4 1/2	28560-S	28561-S	28562-S	53961-S	29163-S	28564-S	28565-S	29165-S	28566-S	29166-S	28567-S	29167-S
	4 3/4	28568-S	28569-S	28570-S	53962-S	29171-S	28572-S	28573-S	29173-S	28574-S	29174-S	28575-S	29175-S
	5	28576-S	28577-S	28578-S	53963-S	29179-S	28580-S	28581-S	29181-S	28582-S	29182-S	28583-S	29183-S
	5 1/2	28584-S	28585-S	28586-S	53964-S	29187-S	28588-S	28589-S	29189-S	28590-S	29190-S	28591-S	29191-S
	6	28592-S	28593-S	29594-S	53965-S	29195-S	28596-S	28597 S	29197-S	28598-S	29198-S	28599-S	29199-S

NOTES: For General Specifications see Page C-950.01. For Finishes see Section "Z" Addendum.
H^1, J^1 and T^1 show dimensions for standard length screws only. (Part Numbers shown below double lines.)
H^2, J^2 and T^2 show dimensions for short length undercut head screws only. (Part Numbers shown above double lines.)

FORD MOTOR COMPANY
STANDARD PARTS

MACHINE SCREWS
OVAL HEAD

SLOTTED
CLASS 2A

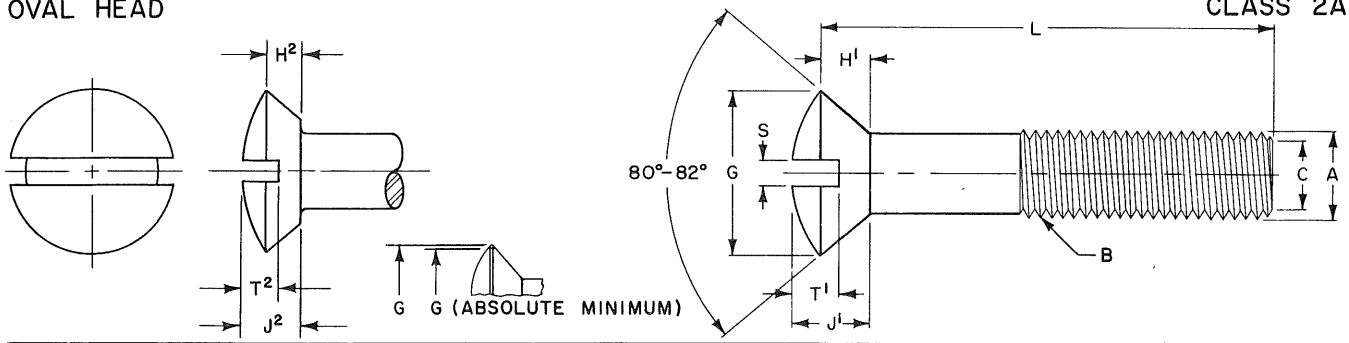

	Screw Size	4	6	8	10		12	1/4		5/16		3/8	
B	Threads Per Inch	40	32	32	24	32	24	20	28	18	24	16	24
A	Major Dia of Thread	.1112 .1061	.1372 .1312	.1631 .1571	.1890 .1818	.1891 .1831	.2150 .2078	.2489 .2408	.2490 .2425	.3113 .3026	.3114 .3042	.3737 .3643	.3739 .3667
	Pitch Dia of Thread	.0950 .0925	.1169 .1141	.1428 .1399	.1619 .1586	.1688 .1658	.1879 .1845	.2164 .2127	.2258 .2225	.2752 .2712	.2843 .2806	.3331 .3287	.3468 .3430
	Pitch Dia of Thread When Plated (Max.)	.0958	.1177	.1437	.1629	.1697	.1889	.2175	.2268	.2764	.2854	.3344	.3479
C	Minor Dia of Thread (Max.)	.0805	.0989	.1248	.1379	.1508	.1639	.1876	.2052	.2431	.2603	.2970	.3228
G	Head Dia (Max. Sharp) (Min. Sharp) (Abs. Min.)	.225 .207 .195	.279 .257 .244	.332 .308 .292	.385 .359 .340	.385 .359 .340	.438 .410 .389	.507 .477 .452	.507 .477 .452	.635 .600 .568	.635 .600 .568	.762 .722 .685	.762 .722 .685
H^1	Side Height (Ref.)	.067	.083	.100	.116	.116	.132	.153	.153	.191	.191	.230	.230
H^2	Side Height (Ref.)	.047	.059	.070	.081	.081	.092	.107	.107	.134	.134	.161	.161
J^1	Total Head Height	.104 .084	.128 .105	.152 .126	.176 .148	.176 .148	.200 .169	.232 .197	.232 .197	.290 .249	.290 .249	.347 .300	.347 .300
J^2	Total Head Height	.084 .067	.104 .084	.123 .101	.142 .118	.142 .118	.161 .135	.186 .158	.186 .158	.232 .198	.232 .198	.278 .239	.278 .239
S	Slot Width	.039 .031	.048 .039	.054 .045	.060 .050	.060 .050	.067 .056	.075 .064	.075 .064	.084 .072	.084 .072	.094 .081	.094 .081
T^1	Slot Depth	.059 .049	.074 .060	.088 .072	.103 .084	.103 .084	.117 .096	.136 .112	.136 .112	.171 .141	.171 .141	.206 .170	.206 .170
T^2	Slot Depth	.053 .043	.065 .053	.078 .064	.090 .074	.090 .074	.103 .085	.119 .098	.119 .098	.149 .124	.149 .124	.179 .149	.179 .149
	MATERIAL	Brass SAE 80-B					FORD PART NUMBERS						
L.	3/16	29535-S	29536-S	29537-S	53966-S	29538-S	29539-S						
	1/4	29540-S	29541-S	29542-S	53967-S	29543-S	29544-S						
	5/16	29545-S	29546-S	29547-S	53968-S	29548-S	29549-S						
	3/8	29550-S	29551-S	29552-S	53969-S	29553-S	29554-S						
	7/16	29555-S	29556-S	29557-S	53970-S	29558-S	29559-S	29560-S	29200-S	29561-S	29201-S	29562-S	29202-S
	1/2	29563-S	29564-S	29565-S	53971-S	29566-S	29567-S	29568-S	29203-S	29569-S	29204-S	29570-S	29205-S
	9/16	29571-S	29572-S	29573-S	53972-S	29574-S	29575-S	29576-S	29206-S	29577-S	29207-S	29578-S	29208-S
	5/8	29579-S	29580-S	29581-S	53973-S	29582-S	29583-S	29584-S	29209-S	29585-S	29210-S	29586-S	29211-S
	11/16	29587-S	29588-S	29589-S	53974-S	29590-S	29591-S	29592-S	29212-S	29593-S	29213-S	29594-S	29214-S
	3/4	29595-S	29596-S	29597-S	53975-S	29598-S	29599-S	29600-S	29215-S	29601-S	29216-S	29602-S	29217-S
	7/8	29611-S	29612-S	29613-S	53976-S	29614-S	29615-S	29616-S	29221-S	29617-S	29222-S	29618-S	29223-S
	1	29627-S	29628-S	29629-S	53977-S	29630-S	29631-S	29632-S	29227-S	29633-S	29228-S	29634-S	29229-S
	1 1/8	29635-S	29636-S	29637-S	53978-S	29638-S	29639-S	29640-S	29230-S	29641-S	29231-S	29642-S	29232-S
	1 1/4	29643-S	29644-S	29645-S	53979-S	29646-S	29647-S	29648-S	29233-S	29649-S	29234-S	29650-S	29235-S
	1 3/8	29651-S	29652-S	29653-S	53980-S	29654-S	29655-S	29656-S	29236-S	29657-S	29237-S	29658-S	29238-S
	1 1/2	29659-S	29660-S	29661-S	53981-S	29662-S	29663-S	29664-S	29239-S	29665-S	29240-S	29666-S	29241-S
	1 5/8	29667-S	29668-S	29669-S	53982-S	29670-S	29671-S	29672-S	29242-S	29673-S	29243-S	29674-S	29244-S
	1 3/4	29675-S	29676-S	29677-S	53983-S	29678-S	29679-S	29680-S	29245-S	29681-S	29246-S	29682-S	29247-S
	1 7/8	29683-S	29684-S	29685-S	53984-S	29686-S	29687-S	29688-S	29248-S	29689-S	29249-S	29690-S	29250-S
	2	29691-S	29692-S	29693-S	53985-S	29694-S	29695-S	29696-S	29251-S	29697-S	29552-S	29698-S	29253-S
	2 1/8	29699-S	29700-S	29701-S	53986-S	29702-S	29703-S	29704-S	29254-S	29705-S	29255-S	29706-S	29256-S
	2 1/4	29707-S	29708-S	29709-S	53987-S	29710-S	29711-S	29712-S	29257-S	29713-S	29258-S	29714-S	29259-S
	2 3/8	29715-S	29716-S	29717-S	53988-S	29718-S	29719-S	29720-S	29260-S	29721-S	29261-S	29722-S	29262-S
	2 1/2	29723-S	29724-S	29725-S	53989-S	29726-S	29727-S	29728-S	29263-S	29729-S	29264-S	29730-S	29265-S
	2 5/8	29731-S	29732-S	29733-S	53990-S	29734-S	29735-S	29736-S	29266-S	29737-S	29267-S	29738-S	29268-S
	2 3/4	29739-S	29740-S	29741-S	53991-S	29742-S	29743-S	29744-S	29269-S	29745-S	29270-S	29746-S	29271-S
	3	29747-S	29748-S	29749-S	53992-S	29750-S	29751-S	29752-S	29272-S	29753-S	29273-S	29754-S	29274-S
	3 1/4	29755-S	29756-S	29757-S	53993-S	29758-S	29759-S	29760-S	29275-S	29761-S	29276-S	29762-S	29277-S
	3 1/2	29763-S	29764-S	29765-S	53994-S	29766-S	29767-S	29768-S	29278-S	29769-S	29279-S	29770-S	29280-S
	3 3/4	29771-S	29772-S	29773-S	53995-S	29774-S	29775-S	29776-S	29281-S	29777-S	29282-S	29778-S	29283-S
	4	29779-S	29780-S	29781-S	53996-S	29782-S	29783-S	29784-S	29284-S	29785-S	29285-S	29786-S	29286-S
	4 1/4			29787-S	53997-S	29788-S	29789-S	29790-S	29287-S	29791-S	29288-S	29792-S	29289-S
	4 1/2			29793-S	53998-S	29794-S	29795-S	29796-S	29290-S	29797-S	29291-S	29798-S	29292-S
	4 3/4			29799-S	53999-S	29800-S	29801-S	29802-S	29293-S	29803-S	29294-S	29804-S	29295-S
	5				54000-S	29805-S	29806-S	29807-S	29296-S	29808-S	29297-S	29809-S	29298-S
	5 1/2				54001-S	29810-S	29811-S	29812-S	29299-S	29813-S	29300-S	29814-S	29301-S
	6				54002-S	29815-S	29816-S	29817-S	29302-S	29818-S	29303-S	29819-S	29304-S

NOTES: For General Specifications see Page C-950.01. For Finishes see Section "Z" Addendum.
H^1, J^1 and T^1 show dimensions for standard length screws only. (Part Numbers shown below double lines).
H^2, J^2 and T^2 show dimensions for short length undercut head screws only. (Part Numbers shown above double lines).

FORD MOTOR COMPANY
STANDARD PARTS

MACHINE SCREWS
OVAL HEAD

SLOTTED
CLASS 2A

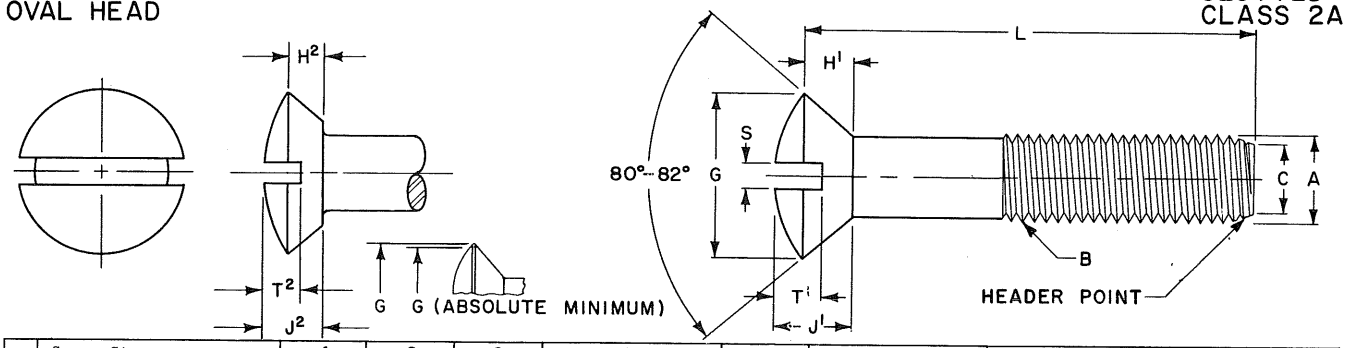

	Screw Size	4	6	8	10		12	1/4		5/16		3/8	
B	Threads Per Inch	40	32	32	24	32	24	20	28	18	24	16	24
A	Major Dia of Thread	.1112 .1061	.1372 .1312	.1631 .1571	.1890 .1818	.1891 .1831	.2150 .2078	.2489 .2408	.2490 .2425	.3113 .3026	.3114 .3042	.3737 .3643	.3739 .3667
	Pitch Dia of Thread	.0950 .0925	.1169 .1141	.1428 .1399	.1619 .1586	.1688 .1658	.1879 .1845	.2164 .2127	.2258 .2225	.2752 .2712	.2843 .2806	.3331 .3287	.3468 .3430
	Pitch Dia of Thread When Plated (Max.)	.0958	.1177	.1437	.1629	.1697	.1889	.2175	.2268	.2764	.2854	.3344	.3479
C	Minor Dia of Thread (Max)	.0805	.0989	.1248	.1379	.1508	.1639	.1876	.2052	.2431	.2603	.2970	.3228
G	Head Dia (Max. Sharp) (Min. Sharp) (Abs. Min.)	.225 .207 .195	.279 .257 .244	.332 .308 .292	.385 .359 .340	.385 .359 .340	.438 .410 .389	.507 .477 .452	.507 .477 .452	.635 .600 .568	.635 .600 .568	.762 .722 .685	.762 .722 .685
H^1	Side Height (Ref.)	.067	.083	.100	.116	.116	.132	.153	.153	.191	.191	.230	.230
H^2	Side Height (Ref.)	.047	.059	.070	.081	.081	.092	.107	.107	.134	.134	.161	.161
J^1	Total Head Height	.104 .084	.128 .105	.152 .126	.176 .148	.176 .148	.200 .169	.232 .197	.232 .197	.290 .249	.290 .249	.347 .300	.347 .300
J^2	Total Head Height	.084 .067	.104 .084	.123 .101	.142 .118	.142 .118	.161 .135	.186 .158	.186 .158	.232 .198	.232 .198	.278 .239	.278 .239
S	Slot Width	.039 .031	.048 .039	.054 .045	.060 .050	.060 .050	.067 .056	.075 .064	.075 .064	.084 .072	.084 .072	.094 .081	.094 .081
T^1	Slot Depth	.059 .049	.074 .060	.088 .072	.103 .084	.130 .084	.117 .096	.136 .112	.136 .112	.171 .141	.171 .141	.206 .170	.206 .170
T^2	Slot Depth	.053 .043	.065 .053	.078 .064	.090 .074	.090 .074	.103 .085	.119 .098	.119 .098	.149 .124	.149 .124	.179 .149	.179 .149

MATERIAL Steel - M 3422-A — FORD PART NUMBERS

LENGTH	4	6	8	10		12	1/4		5/16		3/8	
3/8	30000-S	30001-S	30002-S	54003-S	30453-S	30004-S						
7/16	30005-S	30006-S	30007-S	54004-S	30458-S	30009-S						
1/2	30010-S	30011-S	30012-S	54005-S	30463-S	30014-S	30015-S	30465-S	30016-S	30466-S	30017-S	30467-S
9/16	30018-S	30019-S	30020-S	54006-S	30471-S	30022-S	30023-S	30473-S	30024-S	30474-S	30025-S	30475-S
5/8	30026-S	30027-S	30028-S	54007-S	30479-S	30030-S	30031-S	30481-S	30032-S	30482-S	30033-S	30483-S
11/16	30034-S	30035-S	30036-S	54008-S	30487-S	30038-S	30039-S	30489-S	30040-S	30490-S	30041-S	30491-S
3/4	30042-S	30043-S	30044-S	54009-S	30495-S	30046-S	30047-S	30497-S	30048-S	30498-S	30049-S	30499-S
7/8	30058-S	30059-S	30060-S	54010-S	30511-S	30062-S	30063-S	30513-S	30064-S	30514-S	30065-S	30515-S
1	30074-S	30075-S	30076-S	54011-S	30527-S	30078-S	30079-S	30529-S	30080-S	30530-S	30081-S	30531-S
1 1/8	30082-S	30083-S	30084-S	54012-S	30535-S	30086-S	30087-S	30537-S	30088-S	30538-S	30089-S	30539-S
1 1/4	30090-S	30091-S	30092-S	54013-S	30543-S	30094-S	30095-S	30545-S	30096-S	30546-S	30097-S	30547-S
1 3/8	30098-S	30099-S	30100-S	54014-S	30551-S	30102-S	30103-S	30553-S	30104-S	30554-S	30105-S	30555-S
1 1/2	30106-S	30107-S	30108-S	54015-S	30559-S	30110-S	30111-S	30561-S	30112-S	30562-S	30113-S	30563-S
1 5/8	30114-S	30115-S	30116-S	54016-S	30567-S	30118-S	30119-S	30569-S	30120-S	30570-S	30121-S	30571-S
1 3/4			30122-S	54017-S	30573-S	30124-S	30125-S	30575-S	30126-S	30576-S	30127-S	30577-S
1 7/8			30128-S	54018-S	30579-S	30130-S	30131-S	30581-S	30132-S	30582-S	30133-S	30583-S
2			30134-S	54019-S	30585-S	30136-S	30137-S	30587-S	30138-S	30588-S	30139-S	30589-S

MATERIAL Brass SAE 80-B — FORD PART NUMBERS

LENGTH	4	6	8	10		12	1/4		5/16		3/8	
3/8	30150-S	30151-S	30152-S	54020-S	30603-S	30154-S						
7/16	30155-S	30156-S	30157-S	54021-S	30608-S	30159-S						
1/2	30160-S	30161-S	30162-S	54022-S	30613-S	30164-S	30165-S	30615-S	30166-S	30616-S	30167-S	30617-S
9/16	30168-S	30169-S	30170-S	54023-S	30621-S	30172-S	30173-S	30623-S	30174-S	30624-S	30175-S	30625-S
5/8	30176-S	30177-S	30178-S	54024-S	30629-S	30180-S	30181-S	30631-S	30182-S	30632-S	30183-S	30633-S
11/16	30184-S	30185-S	30186-S	54025-S	30637-S	30188-S	30189-S	30639-S	30190-S	30640-S	30191-S	30641-S
3/4	30192-S	30193-S	30194-S	54026-S	30645-S	30196-S	30197-S	30647-S	30198-S	30648-S	30199-S	30649-S
7/8	30208-S	30209-S	30210-S	54027-S	30661-S	30212-S	30213-S	30663-S	30214-S	30664-S	30215-S	30665-S
1	30224-S	30225-S	30226-S	54028-S	30677-S	30228-S	30229-S	30679-S	30230-S	30680-S	30231-S	30681-S
1 1/8	30232-S	30233-S	30234-S	54029-S	30685-S	30236-S	30237-S	30687-S	30238-S	30688-S	30239-S	30689-S
1 1/4	30240-S	30241-S	30242-S	54030-S	30693-S	30244-S	30245-S	30695-S	30246-S	30696-S	30247-S	30697-S
1 3/8	30248-S	30249-S	30250-S	54031-S	30701-S	30252-S	30253-S	30703-S	30254-S	30704-S	30255-S	30705-S
1 1/2	30256-S	30257-S	30258-S	54032-S	30709-S	30260-S	30261-S	30711-S	30262-S	30712-S	30626-S	30713-S
1 5/8	30264-S	30265-S	30266-S	54033-S	30717-S	30268-S	30269-S	30719-S	30270-S	30720-S	30271-S	30721-S
1 3/4			30272-S	54034-S	30723-S	30274-S	30275-S	30725-S	30276-S	30726-S	30277-S	30727-S
1 7/8			30278-S	54035-S	30729-S	30280-S	30281-S	30731-S	30282-S	30732-S	30283-S	30733-S
2			30284-S	54036-S	30735-S	30286-S	30287-S	30737-S	30288-S	30738-S	30289-S	30739-S

NOTES: For General Specifications see Page C-950.01. For Finishes see Section "Z" Addendum.
H^1, J^1 and T^1 show dimensions for standard length screws only. (Part Numbers shown below double lines).
H^2, J^2 and T^2 show dimensions for short length undercut head screws only. (Part Numbers shown above double lines).
For Header Point Specifications see General Specifications.

FORD MOTOR COMPANY
STANDARD PARTS

SCREW & EXTERNAL TOOTH WASHER ASSEMBLIES
OVAL HEAD

SLOTTED
CLASS 2A

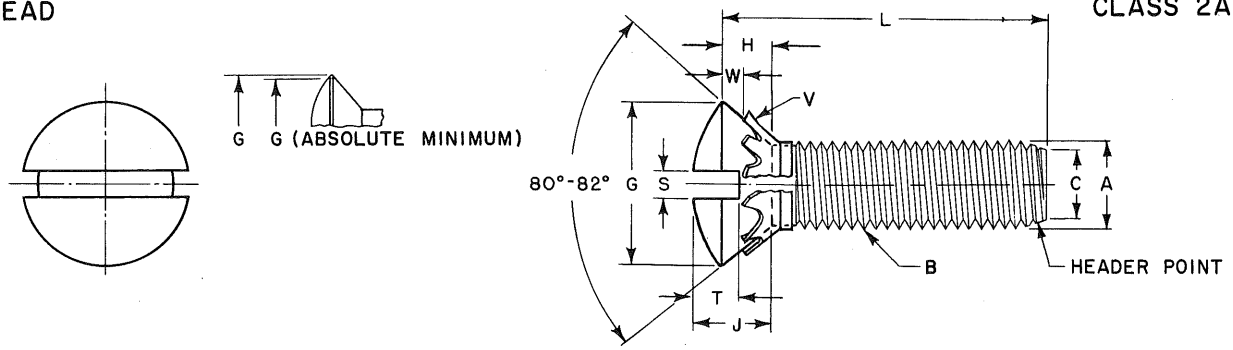

	Screw Size	6	8	10		12	1/4		5/16	
B	Threads Per Inch	32	32	24	32	24	20	28	18	24
A	Major Dia of Thread	.1372 .1312	.1631 .1571	.1890 .1818	.1891 .1831	.2150 .2078	.2489 .2408	.2490 .2425	.3113 .3026	.3114 .3042
	Pitch Dia of Thread	.1169 .1141	.1428 .1399	.1619 .1586	.1688 .1658	.1879 .1845	.2164 .2127	.2258 .2225	.2752 .2712	.2843 .2806
	Pitch Dia of Thread When Plated (Max.)	.1177	.1437	.1629	.1697	.1889	.2175	.2268	.2764	.2854
C	Minor Dia of Thread (Max.)	.0989	.1248	.1379	.1508	.1639	.1876	.2052	.2431	.2603
G	Head Diameter (Max. Sharp) (Min. Sharp) (Abs. Min.)	.279 .257 .244	.332 .308 .292	.385 .359 .340	.385 .359 .340	.438 .410 .389	.507 .477 .452	.507 .477 .452	.635 .600 .568	.635 .600 .568
H	Side Height (Ref.)	.083	.100	.116	.116	.132	.153	.153	.191	.191
J	Total Head Height	.128 .105	.152 .126	.176 .148	.176 .148	.200 .169	.232 .197	.232 .197	.290 .249	.290 .249
S	Slot Width	.048 .039	.054 .045	.060 .050	.060 .050	.067 .056	.075 .064	.075 .064	.084 .072	.084 .072
T	Slot Depth	.074 .060	.088 .072	.103 .084	.103 .084	.117 .096	.136 .112	.136 .112	.171 .141	.171 .141
W	Washer Height - Flush With Minus Tolerance of:	.026	.030	.036	.036	.041	.047	.047	.060	.060
V	Washer Thickness	.020 .016	.020 .016	.025 .019	.025 .019	.025 .019	.025 .019	.025 .019	.028 .023	.028 .023
	MATERIAL	See Notes				FORD PART NUMBERS				
L LENGTH	3/8 1/2 5/8 3/4	42850-S 42851-S 42852-S 42853-S	42854-S 42855-S 42856-S 42857-S	54572-S 54573-S 54574-S 54575-S	42860-S 42861-S 42862-S 42863-S	42867-S 42868-S 42869-S 42870-S	42874-S 42875-S 42876-S	42881-S 42882-S 42883-S	42888-S 42889-S	42894-S 42895-S
	7/8 1 1 1/8 1 1/4		42858-S 42859-S	54576-S 54577-S 54578-S	42864-S 42865-S 42866-S	42871-S 42872-S 42873-S	42877-S 42878-S 42879-S 42880-S	42884-S 42885-S 42886-S 42887-S	42890-S 42891-S 42892-S 42893-S	42896-S 42897-S 42898-S 42899-S

NOTES: For General Specifications see Page C-950.01. For Finishes see Section "Z" Addendum.
MATERIAL: Screw - Steel; M-3422-A. Washer - Steel; SAE 1050, SAE 1060 or SAE 1065, heat treated to Rockwell C40 to C50.
For Header Point Specifications see General Specifications.

FORD MOTOR COMPANY
STANDARD PARTS

MACHINE SCREWS
OVAL HEAD

CROSS RECESSED
CLASS 2A

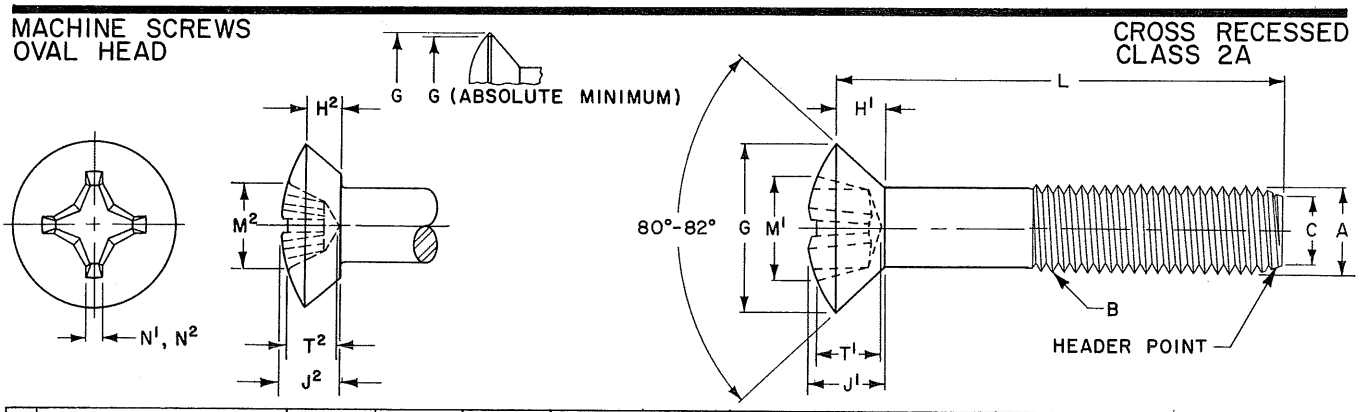

	Screw Size	4	6	8	10		12	1/4		5/16		3/8	
B	Threads Per Inch	40	32	32	24	32	24	20	28	18	24	16	24
A	Major Dia of Thread	.1112 .1061	.1372 .1312	.1631 .1571	.1890 .1818	.1891 .1831	.2150 .2078	.2489 .2408	.2490 .2425	.3113 .3026	.3114 .3042	.3737 .3643	.3739 .3667
	Pitch Dia of Thread	.0950 .0925	.1169 .1141	.1428 .1399	.1619 .1586	.1688 .1658	.1879 .1845	.2164 .2127	.2258 .2225	.2752 .2712	.2843 .2806	.3331 .3287	.3468 .3430
	Pitch Dia of Thread When Plated (Max.)	.0958	.1177	.1437	.1629	.1697	.1889	.2175	.2268	.2764	.2854	.3344	.3479
C	Minor Dia of Thread (Max.)	.0805	.0989	.1248	.1379	.1508	.1639	.1876	.2052	.2431	.2603	.2970	.3228
G	Head Dia (Max. Sharp) (Min. Sharp) (Abs. Min.)	.225 .207 .195	.279 .257 .244	.332 .308 .292	.385 .359 .340	.385 .359 .340	.438 .410 .389	.507 .477 .452	.507 .477 .452	.635 .600 .568	.635 .600 .568	.762 .722 .685	.762 .722 .685
H^1	Side Height (Ref.)	.067	.083	.100	.116	.116	.132	.153	.153	.191	.191	.230	.230
H^2	Side Height (Ref.)	.047	.059	.070	.081	.081	.092	.107	.107	.134	.134	.161	.161
J^1	Total Head Height	.104 .084	.128 .105	.152 .126	.176 .148	.176 .148	.200 .169	.232 .197	.232 .197	.290 .249	.290 .249	.347 .300	.347 .300
J^2	Total Head Height	.084 .067	.104 .084	.123 .101	.142 .118	.142 .118	.161 .135	.186 .158	.186 .158	.232 .198	.232 .198	.278 .239	.278 .239
M^1	Recess Diameter	.136 .123	.178 .165	.192 .179	.209 .196	.209 .196	.270 .257	.290 .277	.290 .277	.390 .377	.390 .377	.410 .397	.410 .397
M^2	Recess Diameter	.136 .123	.178 .165	.192 .179	.209 .196	.209 .196	.270 .257	.290 .277	.290 .277	.381 .368	.381 .368	.400 .387	.400 .387
T^1	Recess Depth	.094 .077	.105 .080	.119 .095	.137 .113	.137 .113	.152 .128	.173 .148	.173 .148	.238 .214	.238 .214	.257 .233	.257 .233
T^2	Recess Depth	.094 .077	.105 .080	.119 .095	.137 .113	.137 .113	.152 .128	.173 .148	.173 .148	.226 .202	.226 .202	.245 .221	.245 .221
N^1	Recess Width	.019	.030	.031	.033	.033	.038	.040	.040	.065	.065	.068	.068
N^2	Recess Width	.019	.030	.031	.033	.033	.038	.040	.040	.064	.064	.066	.066
	Driver Size	1	2	2	2	2	3	3	3	4	4	4	4
	Penetration Gaging Depth	.087 .070	.094 .069	.108 .084	.126 .102	.126 .102	.135 .111	.156 .131	.156 .131	.218 .194	.218 .194	.237 .213	.237 .213
	Penetration Gaging Depth	.087 .070	.094 .069	.108 .084	.126 .102	.126 .102	.135 .111	.156 .131	.156 .131	.206 .182	.206 .182	.225 .201	.225 .201

	MATERIAL	Steel - M 3422-A	FORD PART NUMBERS										
L	1/4	50380-S	50381-S	50382-S	54492-S	50383-S	50384-S						
	3/8	50385-S	50386-S	50387-S	54493-S	50388-S	50389-S	50390-S	50391-S	50392-S	50393-S	50394-S	50395-S
	1/2	50396-S	50397-S	50398-S	54494-S	50399-S	50400-S	50401-S	50402-S	50403-S	50404-S	50405-S	50406-S
	5/8		50407-S	50408-S	54495-S	50409-S	50410-S	50411-S	50412-S	50413-S	50414-S	50415-S	50416-S
	3/4		50417-S	50418-S	54496-S	50419-S	50420-S	50421-S	50422-S	50423-S	50424-S	50425-S	50426-S
	7/8		50427-S	50428-S	54497-S	50429-S	50430-S	50431-S	50432-S	50433-S	50434-S	50435-S	50436-S
	1		50437-S	50438-S	54498-S	50439-S	50440-S	50441-S	50442-S	50443-S	50444-S	50445-S	50446-S
	1 1/4		50447-S	50448-S	54499-S	50449-S	50450-S	50451-S	50452-S	50453-S	50454-S	50455-S	50456-S
	1 1/2			50457-S	54500-S	50458-S	50459-S	50460-S	50461-S	50462-S	50463-S	50464-S	50465-S
	1 3/4			50466-S	54501-S	50467-S	50468-S	50469-S	50470-S	50471-S	50472-S	50473-S	50474-S
	2			50475-S	54502-S	50476-S	50477-S	50478-S	50479-S	50480-S	50481-S	50482-S	50483-S
	2 1/4						50484-S	50485-S	50486-S	50487-S	50488-S	50489-S	50490-S
	2 1/2						50491-S	50492-S	50493-S	50494-S	50495-S	50496-S	50497-S

LENGTH

NOTES: For General Specifications see Page C-950.01. For Finishes see Section "Z" Addendum.
H^1, J^1, M^1, T^1 and N^1 show dimensions for standard length screws only. (Part Numbers shown below double lines.)
H^2, J^2, M^2, T^2 and N^2 show dimensions for short length undercut head screws only. (Part Numbers shown above double lines.)
For Header Point Specifications see General Specifications.
Recess penetration gaging values are shown above. For method and gaging equipment see Section "Z" Addendum.

FORD MOTOR COMPANY
STANDARD PARTS

SCREW & EXTERNAL TOOTH WASHER ASSEMBLIES
OVAL HEAD

CROSS RECESSED
CLASS 2A

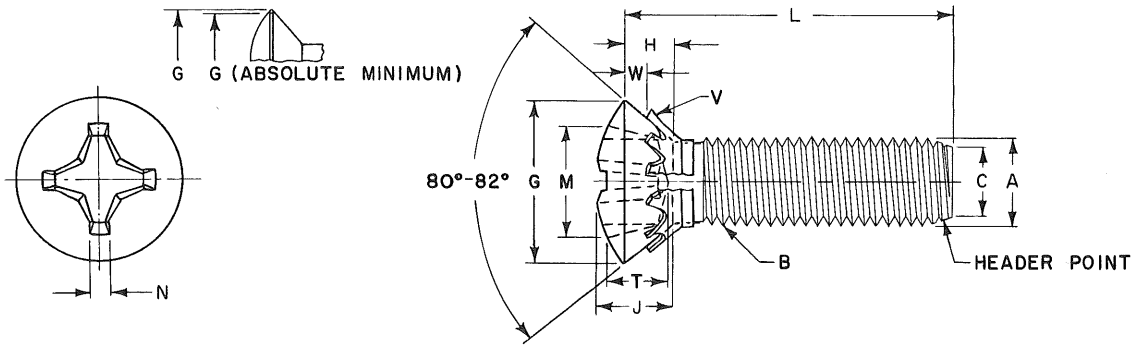

	Screw Size	6	8	10		12	1/4		5/16	
B	Threads Per Inch	32	32	24	32	24	20	28	18	24
A	Major Dia of Thread	.1372 .1312	.1631 .1571	.1890 .1818	.1891 .1831	.2150 .2078	.2489 .2408	.2490 .2425	.3113 .3026	.3114 .3042
	Pitch Dia of Thread	.1169 .1141	.1428 .1399	.1619 .1586	.1688 .1658	.1879 .1845	.2164 .2127	.2258 .2225	.2752 .2712	.2843 .2806
	Pitch Dia of Thread When Plated (Max.)	.1177	.1437	.1629	.1697	.1889	.2175	.2268	.2764	.2854
C	Minor Dia of Thread (Max.)	.0989	.1248	.1379	.1508	.1639	.1876	.2052	.2431	.2603
G	Head Diameter (Max. Sharp) (Min. Sharp) (Abs. Min.)	.279 .257 .244	.332 .308 .292	.385 .359 .340	.385 .359 .340	.438 .410 .389	.507 .477 .452	.507 .477 .452	.635 .600 .568	.635 .600 .568
H	Side Height (Ref.)	.083	.100	.116	.116	.132	.153	.153	.191	.191
J	Total Head Height	.128 .105	.152 .126	.176 .148	.176 .148	.200 .169	.232 .197	.232 .197	.290 .249	.290 .249
M	Recess Diameter	.178 .165	.192 .179	.209 .196	.209 .196	.270 .257	.290 .277	.290 .277	.390 .377	.390 .377
T	Recess Depth	.105 .080	.119 .095	.137 .113	.137 .113	.152 .128	.173 .148	.173 .148	.238 .214	.238 .214
N	Recess Width	.030	.031	.033	.033	.038	.040	.040	.065	.065
	Driver Size	2	2	2	2	3	3	3	4	4
	Penetration Gaging Depth	.094 .069	.108 .084	.126 .102	.126 .102	.135 .111	.156 .131	.156 .131	.218 .194	.218 .194
W	Washer Diameter - Flush with Minus Tolerance of -	.026	.030	.036	.036	.041	.047	.047	.060	.060
V	Washer Thickness	.020 .016	.020 .016	.025 .019	.025 .019	.025 .019	.025 .019	.025 .019	.028 .023	.028 .023
	MATERIAL	See Notes				FORD PART NUMBERS				
L LENGTH	3/8 1/2 5/8 3/4	50691-S 50695-S 50701-S 50707-S	50692-S 50696-S 50702-S 50708-S	54525-S 54526-S 54527-S 54528-S	50693-S 50697-S 50703-S 50709-S	50694-S 50698-S 50704-S 50710-S	50699-S 50705-S 50711-S	50700-S 50706-S 50712-S	50713-S	50714-S
	7/8 1 1 1/8 1 1/4		50715-S 50722-S	54529-S 54530-S 54531-S 54532-S	50716-S 50723-S 50729-S 50735-S	50717-S 50724-S 50730-S 50736-S	50718-S 50725-S 50731-S 50737-S	50719-S 50726-S 50732-S 50738-S	50720-S 50727-S 50733-S 50739-S	50721-S 50728-S 50734-S 50740-S

NOTES: For General Specifications see Page C-950.01. For Finishes see Section "Z" Addendum.
MATERIAL: Screw - Steel; M-3422-A. Washer - Steel; SAE 1050, SAE 1060 or SAE 1065, heat treated to Rockwell C40 to C50.
For Header Point Specifications see General Specifications.
Recess penetration gaging values are shown above. For method and gaging equipment see Section "Z" Addendum.

FORD MOTOR COMPANY
STANDARD PARTS

MACHINE SCREWS
PAN HEAD

SLOTTED
CLASS 2A

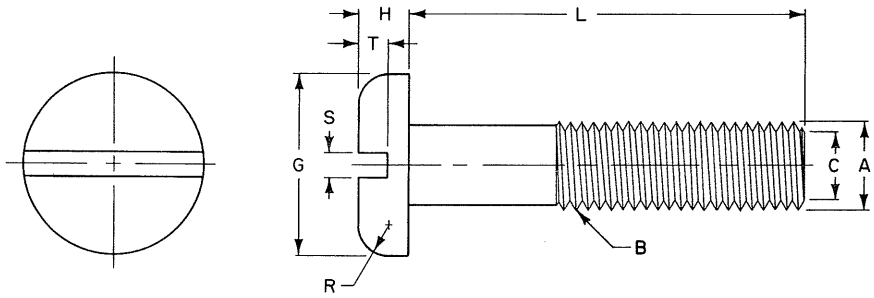

	Screw Size	4	6	8	10		12	1/4		5/16		3/8	
B	Threads Per Inch	40	32	32	24	32	24	20	28	18	24	16	24
A	Major Dia of Thread	.1112 .1061	.1372 .1312	.1631 .1571	.1890 .1818	.1891 .1831	.2150 .2078	.2489 .2408	.2490 .2425	.3113 .3026	.3114 .3042	.3737 .3643	.3739 .3667
	Pitch Dia of Thread	.0950 .0925	.1169 .1141	.1428 .1399	.1619 .1586	.1688 .1658	.1879 .1845	.2164 .2127	.2258 .2225	.2752 .2712	.2843 .2806	.3331 .3287	.3468 .3430
	Pitch Dia of Thread When Plated (Max.)	.0958	.1177	.1437	.1629	.1697	.1889	.2175	.2268	.2764	.2854	.3344	.3479
C	Minor Dia of Thread (Max.)	.0805	.0989	.1248	.1379	.1508	.1639	.1876	.2052	.2431	.2603	.2970	.3228
G	Head Diameter	.219 .205	.270 .256	.322 .306	.373 .357	.373 .357	.425 .407	.492 .473	.492 .473	.615 .594	.615 .594	.740 .716	.740 .716
H	Head Height	.068 .058	.082 .072	.096 .085	.110 .099	.110 .099	.125 .112	.144 .130	.144 .130	.178 .162	.178 .162	.212 .195	.212 .195
R	Radius	.042	.046	.052	.061	.061	.078	.087	.087	.099	.099	.143	.143
S	Slot Width	.039 .031	.048 .039	.054 .045	.060 .050	.060 .050	.067 .056	.075 .064	.075 .064	.084 .072	.084 .072	.094 .081	.094 .081
T	Slot Depth	.040 .030	.050 .037	.058 .045	.068 .053	.068 .053	.077 .061	.087 .070	.087 .070	.106 .085	.106 .085	.124 .100	.124 .100
	MATERIAL	Steel M 3422-A					FORD PART NUMBERS						
L	3/16	38170-S	38171-S	38172-S	54270-S	38173-S	38174-S						
	1/4 5/16 3/8 7/16	38175-S 38180-S 38185-S 38190-S	38176-S 38181-S 38186-S 38191-S	38177-S 38182-S 38187-S 38192-S	54271-S 54272-S 54273-S 54274-S	38178-S 38183-S 38188-S 38193-S	38179-S 38184-S 38189-S 38194-S	38195-S	38196-S	38197-S	38198-S	38199-S	38200-S
	1/2 9/16 5/8 11/16	38201-S 38212-S 38223-S 38234-S	38202-S 38213-S 38224-S 38235-S	38203-S 38214-S 38225-S 38236-S	54275-S 54276-S 54277-S 54278-S	38204-S 38215-S 38226-S 38237-S	38205-S 38216-S 38227-S 38238-S	38206-S 38217-S 38228-S 38239-S	38207-S 38218-S 38229-S 38240-S	38208-S 38219-S 38230-S 38241-S	38209-S 38220-S 38231-S 38242-S	38210-S 38221-S 38232-S 38243-S	38211-S 38222-S 38233-S 38244-S
	3/4 7/8 1 1 1/8	38245-S 38267-S 38289-S 38300-S	38246-S 38268-S 38290-S 38301-S	38247-S 38269-S 38291-S 38302-S	54279-S 54280-S 54281-S 54282-S	38248-S 38270-S 38292-S 38303-S	38249-S 38271-S 38293-S 38304-S	38250-S 38272-S 38294-S 38305-S	38251-S 38273-S 38295-S 38306-S	38252-S 38274-S 38296-S 38307-S	38253-S 38275-S 38297-S 38308-S	38254-S 38276-S 38298-S 38309-S	38255-S 38277-S 38299-S 38310-S
L	1 1/4 1 3/8 1 1/2 1 5/8	38311-S 38322-S 38333-S 38344-S	38312-S 38323-S 38334-S 38345-S	38313-S 38324-S 38335-S 38346-S	54283-S 54284-S 54285-S 54286-S	38314-S 38325-S 38336-S 38347-S	38315-S 38326-S 38337-S 38348-S	38316-S 38327-S 38338-S 38349-S	38317-S 38328-S 38339-S 38350-S	38318-S 38329-S 38340-S 38351-S	38319-S 38330-S 38341-S 38352-S	38320-S 38331-S 38342-S 38353-S	38321-S 38332-S 38343-S 38354-S
E	1 3/4 1 7/8 2 2 1/8	38355-S 38366-S 38377-S 38388-S	38356-S 38367-S 38378-S 38389-S	38357-S 38368-S 38379-S 38390-S	54287-S 54288-S 54289-S 54290-S	38358-S 38369-S 38380-S 38391-S	38359-S 38370-S 38381-S 38392-S	38360-S 38371-S 38382-S 38393-S	38361-S 38372-S 38383-S 38394-S	38362-S 38373-S 38384-S 38395-S	38363-S 38374-S 38385-S 38396-S	38364-S 38375-S 38386-S 38397-S	38365-S 38376-S 38387-S 38398-S
N	2 1/4 2 3/8 2 1/2 2 5/8	38399-S 38410-S 38421-S 38432-S	38400-S 38411-S 38422-S 38433-S	38401-S 38412-S 38423-S 38434-S	54291-S 54292-S 54293-S 54294-S	38402-S 38413-S 38424-S 38435-S	38403-S 38414-S 38425-S 38436-S	38404-S 38415-S 38426-S 38437-S	38405-S 38416-S 38427-S 38438-S	38406-S 38417-S 38428-S 38439-S	38407-S 38418-S 38429-S 38440-S	38408-S 38419-S 38430-S 38441-S	38409-S 38420-S 38431-S 38442-S
G	2 3/4 3 3 1/4 3 1/2	38443-S 38454-S 38465-S 38476-S	38444-S 38455-S 38466-S 38477-S	38445-S 38456-S 38467-S 38478-S	54295-S 54296-S 54297-S 54298-S	38446-S 38457-S 38468-S 38479-S	38447-S 38458-S 38469-S 38480-S	38448-S 38459-S 38470-S 38481-S	38449-S 38460-S 38471-S 38482-S	39450-S 38461-S 38472-S 38483-S	38451-S 38462-S 38473-S 38484-S	38452-S 38463-S 38474-S 38485-S	38453-S 38464-S 38475-S 38486-S
H	3 3/4 4 4 1/4 4 1/2	38487-S 38498-S 38509-S 38520-S	38488-S 38499-S 38510-S 38521-S	38489-S 38500-S 38511-S 38522-S	54299-S 54300-S 54301-S 54302-S	38490-S 38501-S 38512-S 38523-S	38491-S 38502-S 38513-S 38524-S	38492-S 38503-S 38514-S 38525-S	38493-S 38504-S 38515-S 38526-S	38494-S 38505-S 38516-S 38527-S	38495-S 38506-S 38517-S 38528-S	38496-S 38507-S 38518-S 38529-S	38497-S 38508-S 38519-S 38530-S
	4 3/4 5 5 1/2 6	38531-S 38542-S 38553-S 38564-S	38532-S 38543-S 38554-S 38565-S	38533-S 38544-S 38555-S 38566-S	54303-S 54304-S 54305-S 54306-S	38534-S 38545-S 38556-S 38567-S	38535-S 38546-S 38557-S 38568-S	38536-S 38547-S 38558-S 38569-S	38537-S 38548-S 38559-S 38570-S	38538-S 38549-S 38560-S 38571-S	38539-S 38550-S 38561-S 38572-S	38540-S 38551-S 38562-S 38573-S	38541-S 38552-S 38563-S 38574-S

NOTES: For General Specifications see Page C-950.01. For Finishes see Section "Z" Addendum.

FORD MOTOR COMPANY
STANDARD PARTS

MACHINE SCREWS
PAN HEAD

SLOTTED
CLASS 2A

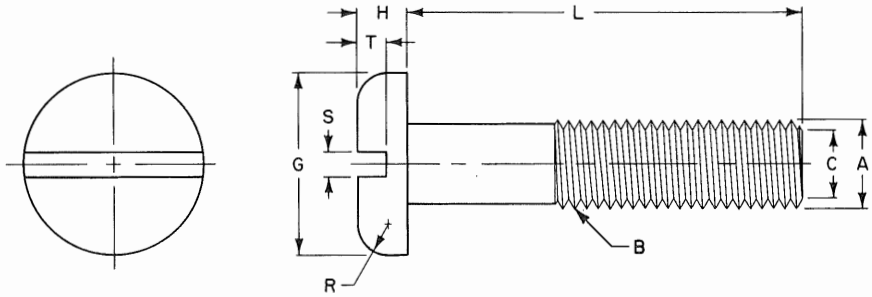

	Screw Size	4	6	8	10		12	1/4		5/16		3/8	
B	Threads Per Inch	40	32	32	24	32	24	20	28	18	24	16	24
A	Major Dia of Thread	.1112 .1061	.1372 .1312	.1631 .1571	.1890 .1818	.1891 .1831	.2150 .2078	.2489 .2408	.2490 .2425	.3113 .3026	.3114 .3042	.3737 .3643	.3739 .3667
	Pitch Dia of Thread	.0950 .0925	.1169 .1141	.1428 .1399	.1619 .1586	.1688 .1658	.1879 .1845	.2164 .2127	.2258 .2225	.2752 .2712	.2843 .2806	.3331 .3287	.3468 .3430
	Pitch Dia of Thread When Plated (Max.)	.0958	.1177	.1437	.1629	.1697	.1889	.2175	.2268	.2764	.2854	.3344	.3479
C	Minor Dia of Thread (Max.)	.0805	.0989	.1248	.1379	.1508	.1639	.1876	.2052	.2431	.2603	.2970	.3228
G	Head Diameter	.219 .205	.270 .256	.322 .306	.373 .357	.373 .357	.425 .407	.492 .473	.492 .473	.615 .594	.615 .594	.740 .716	.740 .716
H	Head Height	.068 .058	.082 .072	.096 .085	.110 .099	.110 .099	.125 .112	.144 .130	.144 .130	.178 .162	.178 .162	.212 .195	.212 .195
R	Radius	.042	.046	.052	.061	.061	.078	.087	.087	.099	.099	.143	.143
S	Slot Width	.039 .031	.048 .039	.054 .045	.060 .050	.060 .050	.067 .056	.075 .064	.075 .064	.084 .072	.084 .072	.094 .081	.094 .081
T	Slot Depth	.040 .030	.050 .037	.058 .045	.068 .053	.068 .053	.077 .061	.087 .070	.087 .070	.106 .085	.106 .085	.124 .100	.124 .100
	MATERIAL	Brass SAE 80-B					FORD PART NUMBERS						
L	3/16	38575-S	38576-S	38577-S	54307-S	38578-S	38579-S	38580-S	38581-S	38582-S	38583-S	38584-S	38585-S
	1/4 5/16 3/8 7/16	38586-S 38597-S 38608-S 38619-S	38587-S 38598-S 38609-S 38620-S	38588-S 38599-S 38610-S 38621-S	54308-S 54309-S 54310-S 54311-S	38589-S 38600-S 38611-S 38622-S	38590-S 38601-S 38612-S 38623-S	38591-S 38602-S 38613-S 38624-S	38592-S 38603-S 38614-S 38625-S	38593-S 38604-S 38615-S 38626-S	38594-S 38605-S 38616-S 38627-S	38595-S 38606-S 38617-S 38628-S	38596-S 38607-S 38618-S 38629-S
	1/2 9/16 5/8 11/16	38630-S 38641-S 38652-S 38663-S	38631-S 38642-S 38653-S 38664-S	38632-S 38643-S 38654-S 38665-S	54312-S 54313-S 54314-S 54315-S	38633-S 38644-S 38655-S 38666-S	38634-S 38645-S 38656-S 38667-S	38635-S 38646-S 38657-S 38668-S	38636-S 38647-S 38658-S 38669-S	38637-S 38648-S 38659-S 38670-S	38638-S 38649-S 38660-S 38671-S	38639-S 38650-S 38661-S 38672-S	38640-S 38651-S 38662-S 38673-S
	3/4 7/8 1 1 1/8	38674-S 38696-S 38718-S 38729-S	38675-S 38697-S 38719-S 38730-S	38676-S 38698-S 38720-S 38731-S	54316-S 54317-S 54318-S 54319-S	38677-S 38699-S 38721-S 38732-S	38678-S 38700-S 38722-S 38733-S	38679-S 38701-S 38723-S 38734-S	38680-S 38702-S 38724-S 38735-S	38681-S 38703-S 38725-S 38736-S	38682-S 38704-S 38726-S 38737-S	38683-S 38705-S 38727-S 38738-S	38684-S 38706-S 38728-S 38739-S
	1 1/4 1 3/8 1 1/2 1 5/8	38740-S 38751-S 38762-S 38773-S	38741-S 38752-S 38763-S 38774-S	38742-S 38753-S 38764-S 38775-S	54320-S 54321-S 54322-S 54323-S	38743-S 38754-S 38765-S 38776-S	38744-S 38755-S 38766-S 38777-S	38745-S 38756-S 38767-S 38778-S	38746-S 38757-S 38768-S 38779-S	38747-S 38758-S 38769-S 38780-S	38748-S 38759-S 38770-S 38781-S	38749-S 38760-S 38771-S 38782-S	38750-S 38761-S 38772-S 38783-S
	1 3/4 1 7/8 2 2 1/8	38784-S 38795-S 38806-S 38817-S	38785-S 38796-S 38807-S 38818-S	38786-S 38797-S 38808-S 38819-S	54324-S 54325-S 54326-S 54327-S	38787-S 38798-S 38809-S 38820-S	38788-S 38799-S 38810-S 38821-S	38789-S 38800-S 38811-S 38822-S	38790-S 38801-S 38812-S 38823-S	38791-S 38802-S 38813-S 38824-S	38792-S 38803-S 38814-S 38825-S	38793-S 38804-S 38815-S 38826-S	38794-S 38805-S 38816-S 38827-S
	2 1/4 2 3/8 2 1/2 2 5/8	38828-S 38839-S 38850-S 38861-S	38829-S 38840-S 38851-S 38862-S	38830-S 38841-S 38852-S 38863-S	54328-S 54329-S 54330-S 54331-S	33831-S 38842-S 38853-S 38864-S	38832-S 38843-S 38854-S 38865-S	38833-S 38844-S 38855-S 38866-S	38834-S 38845-S 38856-S 38867-S	38835-S 38846-S 38857-S 38868-S	38836-S 38847-S 38858-S 38869-S	38837-S 38848-S 38859-S 38870-S	38838-S 38849-S 38860-S 38871-S
	2 3/4 3 3 1/4 3 1/2	38872-S 38883-S 38894-S 38905-S	38873-S 38884-S 38895-S 38906-S	38874-S 38885-S 38896-S 38907-S	54332-S 54333-S 54334-S 54335-S	38875-S 38886-S 38897-S 38908-S	38876-S 38887-S 38898-S 38909-S	38877-S 38888-S 38899-S 38910-S	38878-S 38889-S 38900-S 38911-S	38879-S 38890-S 38901-S 38912-S	38880-S 38891-S 38902-S 38913-S	38881-S 38892-S 38903-S 38914-S	38882-S 38893-S 38904-S 38915-S
	3 3/4 4 4 1/4 4 1/2	38916-S 38927-S 38938-S 38949-S	38917-S 38928-S 38939-S 38950-S	38918-S 38929-S 38940-S 38951-S	54336-S 54337-S 54338-S 54339-S	38919-S 38930-S 38941-S 38952-S	38920-S 38931-S 38942-S 38953-S	38921-S 38932-S 38943-S 38954-S	38922-S 38933-S 38944-S 38955-S	38923-S 38934-S 38945-S 38956-S	38924-S 38935-S 38946-S 38957-S	38925-S 38936-S 38947-S 38958-S	38926-S 38937-S 38948-S 38959-S
	4 3/4 5 5 1/2 6	38960-S 38971-S 38982-S 38993-S	38961-S 38972-S 38983-S 38994-S	38962-S 38973-S 38984-S 38995-S	54340-S 54341-S 54342-S 54343-S	38963-S 38974-S 38985-S 38996-S	38964-S 38975-S 38986-S 38997-S	38965-S 38976-S 38987-S 38998-S	38966-S 38977-S 38988-S 38999-S	38967-S 38978-S 38989-S 39000-S	38968-S 38979-S 38990-S 39001-S	38969-S 38980-S 38991-S 39002-S	38970-S 38981-S 38992-S 39003-S

LENGTH

NOTES: For General Specifications see Page C-950.01. For Finishes see Section "Z" Addendum.

FORD MOTOR COMPANY
STANDARD PARTS

MACHINE SCREWS
PAN HEAD

SLOTTED
CLASS 2A

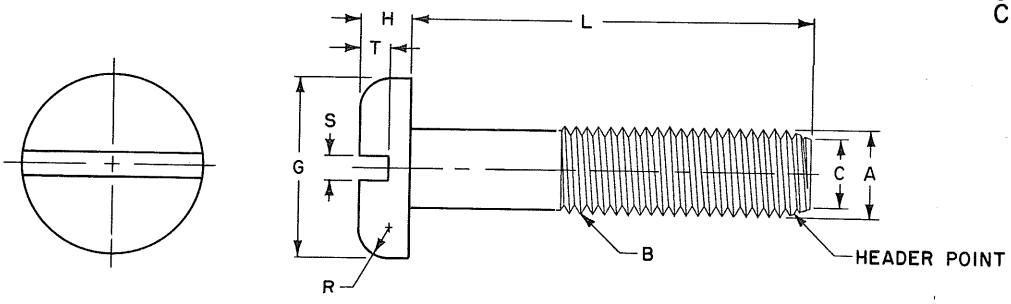

	Screw Size	4	6	8	10		12	1/4		5/16		3/8	
B	Threads Per Inch	40	32	32	24	32	24	20	28	18	24	16	24
A	Major Dia of Thread	.1112 .1061	.1372 .1312	.1631 .1571	.1890 .1818	.1891 .1831	.2150 .2078	.2489 .2408	.2490 .2425	.3113 .3026	.3114 .3042	.3737 .3643	.3739 .3667
	Pitch Dia of Thread	.0950 .0925	.1169 .1141	.1428 .1399	.1619 .1586	.1688 .1658	.1879 .1845	.2164 .2127	.2258 .2225	.2752 .2712	.2843 .2806	.3331 .3287	.3468 .3430
	Pitch Dia of Thread When Plated (Max.)	.0958	.1177	.1437	.1629	.1697	.1889	.2175	.2268	.2764	.2854	.3344	.3479
C	Minor Dia of Thread (Max)	.0805	.0989	.1248	.1379	.1508	.1639	.1876	.2052	.2431	.2603	.2970	.3228
G	Head Diameter	.219 .205	.270 .256	.322 .306	.373 .357	.373 .357	.425 .407	.492 .473	.492 .473	.615 .594	.615 .594	.740 .716	.740 .716
H	Head Height	.068 .058	.082 .072	.096 .085	.110 .099	.110 .099	.125 .112	.144 .130	.144 .130	.178 .162	.178 .162	.212 .195	.212 .195
R	Radius	.042	.046	.052	.061	.061	.078	.087	.087	.099	.099	.143	.143
S	Slot Width	.039 .031	.048 .039	.054 .045	.060 .050	.060 .050	.067 .056	.075 .064	.075 .064	.084 .072	.084 .072	.094 .081	.094 .081
T	Slot Depth	.040 .030	.050 .037	.058 .045	.068 .053	.068 .053	.077 .061	.087 .070	.087 .070	.106 .085	.106 .085	.124 .100	.124 .100

MATERIAL Steel - M 3422-A

FORD PART NUMBERS

LENGTH	4	6	8	10		12	1/4		5/16		3/8	
3/16	39004-S	39005-S	39006-S	54344-S	39007-S	39008-S						
1/4, 5/16, 3/8, 7/16	39009-S 39014-S 39029-S 39034-S	39010-S 39015-S 39030-S 39035-S	39011-S 39016-S 39031-S 39036-S	54345-S 54346-S 54347-S 54348-S	39012-S 39017-S 39032-S 39037-S	39013-S 39018-S 39033-S 39038-S	39039-S	39040-S	39041-S	39042-S	39043-S	39044-S
1/2, 9/16, 5/8, 11/16	39045-S 39056-S 39067-S 39078-S	39046-S 39057-S 39068-S 39079-S	39047-S 39058-S 39069-S 39080-S	54349-S 54350-S 54351-S 54352-S	39048-S 39059-S 39070-S 39081-S	39049-S 39060-S 39071-S 39082-S	39050-S 39061-S 39072-S 39083-S	39051-S 39062-S 39073-S 39084-S	39052-S 39063-S 39074-S 39085-S	39053-S 39064-S 39075-S 39086-S	39054-S 39065-S 39076-S 39087-S	39055-S 39066-S 39077-S 39088-S
3/4, 7/8, 1, 1 1/8	39089-S 39111-S 39133-S 39144-S	39090-S 39112-S 39134-S 39145-S	39091-S 39113-S 39135-S 39146-S	54353-S 54354-S 54355-S 54356-S	39092-S 39114-S 39136-S 39147-S	39093-S 39115-S 39137-S 39148-S	39094-S 39116-S 39138-S 39149-S	39095-S 39117-S 39139-S 39150-S	39096-S 39118-S 39140-S 39151-S	39097-S 39119-S 39141-S 39152-S	39098-S 39120-S 39142-S 39153-S	39099-S 39121-S 39143-S 39154-S
1 1/4, 1 3/8, 1 1/2, 1 5/8	39155-S 39166-S 39177-S 39188-S	39156-S 39167-S 39178-S 39189-S	39157-S 39168-S 39179-S 39190-S	54357-S 54358-S 54359-S 54360-S	39158-S 39169-S 39180-S 39191-S	39159-S 39170-S 39181-S 39192-S	39160-S 39171-S 39182-S 39193-S	39161-S 39172-S 39183-S 39194-S	39162-S 39173-S 39184-S 39195-S	39163-S 39174-S 39185-S 39196-S	39164-S 39175-S 39186-S 39197-S	39165-S 39176-S 39187-S 39198-S
1 3/4, 1 7/8, 2, 2 1/8	39199-S 39210-S 39221-S 39232-S	39200-S 39211-S 39222-S 39233-S	39201-S 39212-S 39223-S 39234-S	54361-S 54362-S 54363-S 54364-S	39202-S 39213-S 39224-S 39235-S	39203-S 39214-S 39225-S 39236-S	39204-S 39215-S 39226-S 39237-S	39205-S 39216-S 39227-S 39238-S	39206-S 39217-S 39228-S 39239-S	39207-S 39218-S 39229-S 39240-S	39208-S 39219-S 39230-S 39241-S	39209-S 39220-S 39231-S 39242-S
2 1/4, 2 3/8, 2 1/2, 2 5/8	39243-S 39254-S 39265-S 39276-S	39244-S 39255-S 39266-S 39277-S	39245-S 39256-S 39267-S 39278-S	54365-S 54366-S 54367-S 54368-S	39246-S 39257-S 39268-S 39279-S	39247-S 39258-S 39269-S 39280-S	39248-S 39259-S 39270-S 39281-S	39249-S 39260-S 39271-S 39282-S	39250-S 39261-S 39272-S 39283-S	39251-S 39262-S 39273-S 39284-S	39252-S 39263-S 39274-S 39285-S	39253-S 39264-S 39275-S 39286-S
2 3/4, 3, 3 1/4, 3 1/2	39287-S 39298-S 39309-S 39320-S	39288-S 39299-S 39310-S 39321-S	39289-S 39300-S 39311-S 39322-S	54369-S 54370-S 54371-S 54372-S	39290-S 39301-S 39312-S 39323-S	39291-S 39302-S 39313-S 39324-S	39292-S 39303-S 39314-S 39325-S	39293-S 39304-S 39315-S 39326-S	39294-S 39305-S 39316-S 39327-S	39295-S 39306-S 39317-S 39328-S	39296-S 39307-S 39318-S 39329-S	39297-S 39308-S 39319-S 39330-S
3 3/4, 4, 4 1/4, 4 1/2	39331-S 39342-S 39353-S 39364-S	39332-S 39343-S 39354-S 39365-S	39333-S 39344-S 39355-S 39366-S	54373-S 54374-S 54375-S 54376-S	39334-S 39345-S 39356-S 39367-S	39335-S 39346-S 39357-S 39368-S	39336-S 39347-S 39358-S 39369-S	39337-S 39348-S 39359-S 39370-S	39338-S 39349-S 39360-S 39371-S	39339-S 39350-S 39361-S 39372-S	39340-S 39351-S 39362-S 39373-S	39341-S 39352-S 39363-S 39374-S
4 3/4, 5, 5 1/2, 6	39375-S 39386-S 39397-S 39408-S	39376-S 39387-S 39398-S 39409-S	39377-S 39388-S 39399-S 39410-S	54377-S 54378-S 54379-S 54380-S	39378-S 39389-S 39400-S 39411-S	39379-S 39390-S 39401-S 39412-S	39380-S 39391-S 39402-S 39413-S	39381-S 39392-S 39403-S 39414-S	39382-S 39393-S 39404-S 39415-S	39383-S 39394-S 39405-S 39416-S	39384-S 39395-S 39406-S 39417-S	39385-S 39396-S 39407-S 39418-S

NOTES: For General Specifications see Page C-950.01. For Finishes see Section "Z" Addendum.
For Header Point Specifications see General Specifications.

FORD MOTOR COMPANY
STANDARD PARTS

MACHINE SCREWS
PAN HEAD

SLOTTED
CLASS 2A

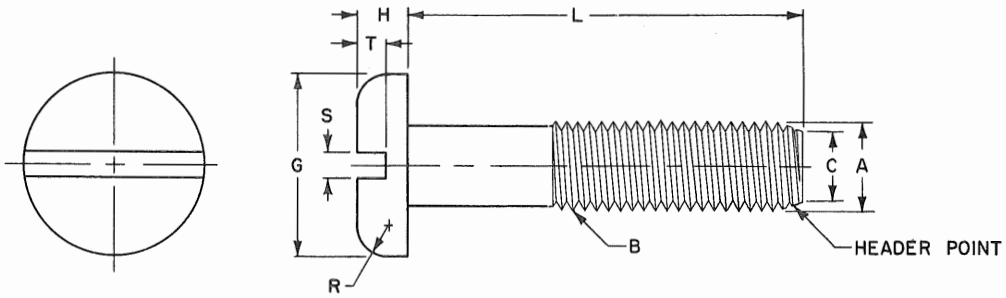

	Screw Size	4	6	8	10		12	1/4		5/16		3/8	
B	Threads Per Inch	40	32	32	24	32	24	20	28	18	24	16	24
A	Major Dia of Thread	.1112 .1061	.1372 .1312	.1631 .1571	.1890 .1818	.1891 .1831	.2150 .2078	.2489 .2408	.2490 .2425	.3113 .3026	.3114 .3042	.3737 .3643	.3739 .3667
	Pitch Dia of Thread	.0950 .0925	.1169 .1141	.1428 .1399	.1619 .1586	.1688 .1658	.1879 .1845	.2164 .2127	.2258 .2225	.2752 .2712	.2843 .2806	.3331 .3287	.3468 .3430
	Pitch Dia of Thread When Plated (Max.)	.0958	.1177	.1437	.1629	.1697	.1889	.2175	.2268	.2764	.2854	.3344	.3479
C	Minor Dia of Thread (Max.)	.0805	.0989	.1248	.1379	.1508	.1639	.1876	.2052	.2431	.2603	.2970	.3228
G	Head Diameter	.219 .205	.270 .256	.322 .306	.373 .357	.373 .357	.425 .407	.492 .473	.492 .473	.615 .594	.615 .594	.740 .716	.740 .716
H	Head Height	.068 .058	.082 .072	.096 .085	.110 .099	.110 .099	.125 .112	.144 .130	.144 .130	.178 .162	.178 .162	.212 .195	.212 .195
R	Radius	.042	.046	.052	.061	.061	.078	.087	.087	.099	.099	.143	.143
S	Slot Width	.039 .031	.048 .039	.054 .045	.060 .050	.060 .050	.067 .056	.075 .064	.075 .064	.084 .072	.084 .072	.094 .081	.094 .081
T	Slot Depth	.040 .030	.050 .037	.058 .045	.068 .053	.068 .053	.077 .061	.087 .070	.087 .070	.106 .085	.106 .085	.124 .100	.124 .100
	MATERIAL	Brass-SAE 80-B					FORD PART NUMBERS						
L	3/16	39419-S	39420-S	39421-S	54381-S	39422-S	39423-S	39424-S	39425-S	39426-S	39427-S	39428-S	39429-S
	1/4 5/16 3/8 7/16	39430-S 39441-S 39452-S 39463-S	39431-S 39442-S 39453-S 39464-S	39432-S 39443-S 39454-S 39465-S	54382-S 54383-S 54384-S 54385-S	39433-S 39444-S 39455-S 39466-S	39434-S 39445-S 39456-S 39467-S	39435-S 39446-S 39457-S 39468-S	39436-S 39447-S 39458-S 39469-S	39437-S 39448-S 39459-S 39470-S	39438-S 39449-S 39460-S 39471-S	39439-S 39450-S 39461-S 39472-S	39440-S 39451-S 39462-S 39473-S
	1/2 9/16 5/8 11/16	39474-S 39485-S 39496-S 39507-S	39475-S 39486-S 39497-S 39508-S	39476-S 39487-S 39498-S 39509-S	54386-S 54387-S 54388-S 54389-S	39477-S 39488-S 39499-S 39510-S	39478-S 39489-S 39500-S 39511-S	39479-S 39490-S 39501-S 39512-S	39480-S 39491-S 39502-S 39513-S	39481-S 39492-S 39503-S 39514-S	39482-S 39493-S 39504-S 39515-S	39483-S 39494-S 39505-S 39516-S	39484-S 39495-S 39506-S 39517-S
	3/4 7/8 1 1 1/8	39518-S 39540-S 39562-S 39573-S	39519-S 39541-S 39563-S 39574-S	39520-S 39542-S 39564-S 39575-S	54390-S 54391-S 54392-S 54393-S	39521-S 39543-S 39565-S 39576-S	39522-S 39544-S 39566-S 39577-S	39523-S 39545-S 39567-S 39578-S	39524-S 39546-S 39568-S 39579-S	39525-S 39547-S 39569-S 39580-S	39526-S 39548-S 39570-S 39581-S	39527-S 39549-S 39571-S 39582-S	39528-S 39550-S 39572-S 39583-S
LENGTH	1 1/4 1 3/8 1 1/2 1 5/8	39584-S 39595-S 39606-S 39617-S	39585-S 39596-S 39607-S 39618-S	39586-S 39597-S 39608-S 39619-S	54394-S 54395-S 54396-S 54397-S	39587-S 39598-S 39609-S 39620-S	39588-S 39599-S 39610-S 39621-S	39589-S 39600-S 39611-S 39622-S	39590-S 39601-S 39612-S 39623-S	39591-S 39602-S 39613-S 39624-S	39592-S 39603-S 39614-S 39625-S	39593-S 39604-S 39615-S 39626-S	39594-S 39605-S 39616-S 39627-S
	1 3/4 1 7/8 2 2 1/8	39628-S 39639-S 39650-S 39661-S	39629-S 39640-S 39651-S 39662-S	39630-S 39641-S 39652-S 39663-S	54398-S 54399-S 54400-S 54401-S	39631-S 39642-S 39653-S 39664-S	39632-S 39643-S 39654-S 39665-S	39633-S 39644-S 39655-S 39666-S	39634-S 39645-S 39656-S 39667-S	39635-S 39646-S 39657-S 39668-S	39636-S 39647-S 39658-S 39669-S	39637-S 39648-S 30659-S 39670-S	39638-S 39649-S 39660-S 39671-S
	2 1/4 2 3/8 2 1/2 2 5/8	39672-S 39683-S 39694-S 39705-S	39673-S 39684-S 39695-S 39706-S	39674-S 39685-S 39696-S 39707-S	54402-S 54403-S 54404-S 54405-S	39675-S 39686-S 39697-S 39708-S	39676-S 39687-S 39698-S 39709-S	39677-S 39688-S 39699-S 39710-S	39678-S 39689-S 39700-S 39711-S	39679-S 39690-S 39701-S 39712-S	39680-S 39691-S 39702-S 39713-S	39681-S 39692-S 39703-S 39714-S	39682-S 39693-S 39704-S 39715-S
	2 3/4 3 3 1/4 3 1/2	39716-S 39727-S 39738-S 39749-S	39717-S 39728-S 39739-S 39750-S	39718-S 39729-S 39740-S 39751-S	54406-S 54407-S 54408-S 54409-S	39719-S 39730-S 39741-S 39752-S	39720-S 39731-S 39742-S 39753-S	39721-S 39732-S 39743-S 39754-S	39722-S 39733-S 39744-S 39755-S	39723-S 39734-S 39745-S 39756-S	39724-S 39735-S 39746-S 39757-S	39725-S 39736-S 39747-S 39758-S	39726-S 39737-S 39748-S 39759-S
	3 3/4 4 4 1/4 4 1/2	39760-S 39771-S 39782-S 39793-S	39761-S 39772-S 39783-S 39794-S	39762-S 39773-S 39784-S 39795-S	54410-S 54411-S 54412-S 54413-S	39763-S 39774-S 39785-S 39796-S	39764-S 39775-S 39786-S 39797-S	39765-S 39776-S 39787-S 39798-S	39766-S 39777-S 39788-S 39799-S	39767-S 39778-S 39789-S 39800-S	39768-S 39779-S 39790-S 39801-S	39769-S 39780-S 39791-S 39802-S	39770-S 39781-S 39792-S 39803-S
	4 3/4 5 5 1/2 6	39804-S 39815-S 39826-S 39837-S	39805-S 39816-S 39827-S 39838-S	39806-S 39817-S 39828-S 39839-S	54414-S 54415-S 54416-S 54417-S	39807-S 39818-S 39829-S 39840-S	39808-S 39819-S 39830-S 39841-S	39809-S 39820-S 39831-S 39842-S	39810-S 39821-S 39832-S 39843-S	39811-S 39822-S 39833-S 39844-S	39812-S 39823-S 39834-S 39845-S	39813-S 39824-S 39835-S 39846-S	39814-S 39825-S 39836-S 39847-S

NOTES: For General Specifications see Page C-950.01. For Finishes see Section "Z" Addendum.
For Header Point Specifications see General Specifications.

FORD MOTOR COMPANY
STANDARD PARTS

SCREW & SPRING LOCK WASHER ASSEMBLIES
PAN HEAD

SLOTTED
CLASS 2A

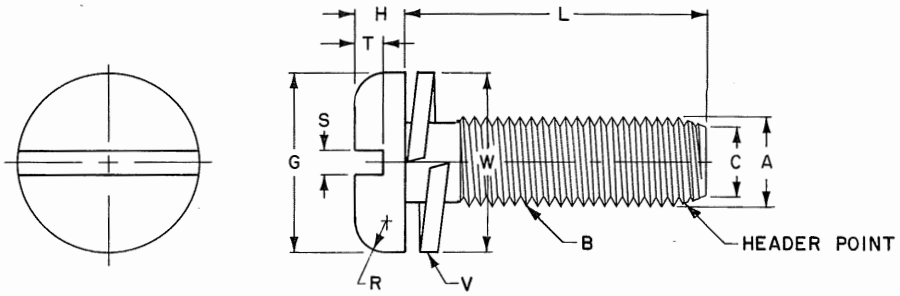

	Screw Size	6	8	10		12	1/4		5/16	
B	Threads Per Inch	32	32	24	32	24	20	28	18	24
A	Major Dia of Thread	.1372 .1312	.1631 .1571	.1890 .1818	.1891 .1831	.2150 .2078	.2489 .2408	.2490 .2425	.3113 .3026	.3114 .3042
	Pitch Dia of Thread	.1169 .1141	.1428 .1399	.1619 .1586	.1688 .1658	.1879 .1845	.2164 .2127	.2258 .2225	.2752 .2712	.2843 .2806
	Pitch Dia of Thread When Plated (Max.)	.1177	.1437	.1629	.1697	.1889	.2175	.2268	.2764	.2854
C	Minor Dia of Thread (Max.)	.0989	.1248	.1379	.1508	.1639	.1876	.2052	.2431	.2603
G	Head Diameter	.270 .256	.322 .306	.373 .357	.373 .357	.425 .407	.492 .473	.492 .473	.615 .594	.615 .594
H	Head Thickness	.082 .072	.096 .085	.110 .099	.110 .099	.125 .112	.144 .130	.144 .130	.178 .162	.178 .162
R	Radius	.046	.052	.061	.061	.078	.087	.087	.099	.099
S	Slot Width	.048 .039	.054 .045	.060 .050	.060 .050	.067 .056	.075 .064	.075 .064	.084 .072	.084 .072
T	Slot Depth	.050 .037	.058 .045	.068 .053	.068 .053	.077 .061	.087 .070	.087 .070	.106 .085	.106 .085
W	Washer Diameter	.261 .248	.319 .305	.373 .359	.373 .359	.429 .414	.496 .480	.496 .480	.618 .602	.618 .602
V	Washer Thickness (Min.)	.034	.031	.047	.047	.062	.062	.062	.078	.078
	MATERIAL	See Notes				FORD PART NUMBERS				
L	1/4	43370-S	43428-S	54436-S	43238-S	43429-S	43430-S	43239-S		
LENGTH	3/8 1/2 5/8 3/4	42903-S 43377-S 43439-S 43446-S	43373-S 43241-S 43242-S 43243-S	54437-S 54438-S 54439-S 54440-S	43378-S 43434-S 43440-S 43447-S	43431-S 43376-S 43441-S 43371-S	43432-S 43435-S 43442-S 43448-S	43369-S 43436-S 43443-S 43449-S	43433-S 43437-S 43444-S 43450-S	43240-S 43438-S 43445-S 43451-S
	7/8 1 1 1/8 1 1/4	43452-S 43460-S	43453-S 43461-S	54441-S 54442-S 54443-S 54444-S	43454-S 43462-S 43468-S 43474-S	43455-S 43463-S 43469-S 43475-S	43456-S 43464-S 43470-S 43476-S	43457-S 43465-S 43471-S 43477-S	43458-S 43466-S 43472-S 43478-S	43459-S 43467-S 43473-S 43479-S

NOTES: For General Specifications see Page C-950.01. For Finishes see Section "Z" Addendum.
MATERIAL: Screw - Steel; M-3422-A. Washer - Steel; SAE 1060, SAE 1065 or SAE 1070, heat treated to Rockwell C45 to C53.
For Header Point Specifications see General Specifications.

FORD MOTOR COMPANY
STANDARD PARTS

SCREW & EXTERNAL TOOTH WASHER ASSEMBLIES
PAN HEAD

SLOTTED
CLASS 2A

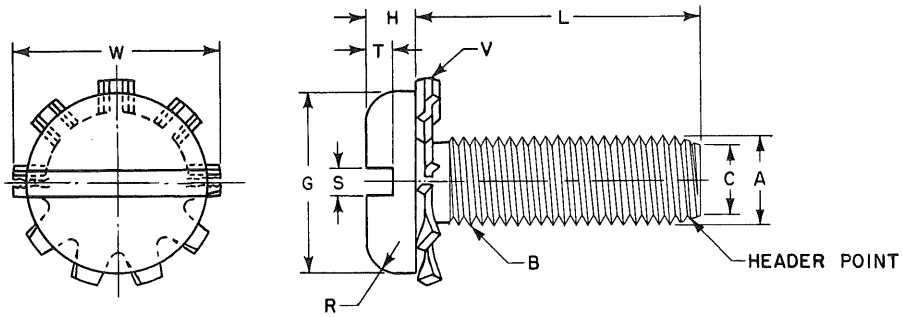

	Screw Size	6	8	10		12	1/4		5/16	
B	Threads Per Inch	32	32	24	32	24	20	28	18	24
A	Major Dia of Thread	.1372 .1312	.1631 .1571	.1890 .1818	.1891 .1831	.2150 .2078	.2489 .2408	.2490 .2425	.3113 .3026	.3114 .3042
	Pitch Dia of Thread	.1169 .1141	.1428 .1399	.1619 .1586	.1688 .1658	.1879 .1845	.2164 .2127	.2258 .2225	.2752 .2712	.2843 .2806
	Pitch Dia of Thread When Plated (Max.)	.1177	.1437	.1629	.1697	.1889	.2175	.2268	.2764	.2854
C	Minor Dia of Thread (Max.)	.0989	.1248	.1379	.1508	.1639	.1876	.2052	.2431	.2603
G	Head Diameter	.270 .256	.322 .306	.373 .357	.373 .357	.425 .407	.492 .473	.492 .473	.615 .594	.615 .594
H	Head Height	.082 .072	.096 .085	.110 .099	.110 .099	.125 .112	.144 .130	.144 .130	.178 .162	.178 .162
R	Radius	.046	.052	.061	.061	.078	.087	.087	.099	.099
S	Slot Width	.048 .039	.054 .045	.060 .050	.060 .050	.067 .056	.075 .064	.075 .064	.084 .072	.084 .072
T	Slot Depth	.050 .037	.058 .045	.068 .053	.068 .053	.077 .061	.087 .070	.087 .070	.106 .085	.106 .085
W	Washer Diameter	.285 .270	.320 .305	.381 .365	.381 .365	.410 .395	.510 .494	.510 .494	.610 .588	.610 .588
V	Washer Thickness	.020 .014	.023 .018	.024 .018	.024 .018	.027 .020	.028 .023	.028 .023	.034 .028	.034 .028
	MATERIAL	See Notes				FORD PART NUMBERS				
L	1/4	42790-S	42795-S							
LENGTH	3/8 1/2 5/8 3/4	42791-S 42792-S 42793-S 42794-S	42796-S 42797-S 42798-S 42799-S	54586-S 54587-S 54588-S 54589-S	42802-S 42803-S 42804-S 42805-S	42809-S 42810-S 42811-S 42812-S	42816-S 42817-S 42818-S 42819-S	42824-S 42825-S 42826-S 42827-S	42832-S 42833-S 42834-S	42839-S 42840-S 42841-S
	7/8 1 1 1/8 1 1/4		42800-S 42801-S	54590-S 54591-S 54592-S 54593-S	42806-S 42807-S 42808-S 43315-S	42813-S 42814-S 42815-S	42820-S 42821-S 42822-S 42823-S	42828-S 42829-S 42830-S 42831-S	42835-S 42836-S 42837-S 42838-S	42842-S 42843-S 42844-S 42845-S

NOTES: For General Specifications see Page C-950.01. For Finishes see Section "Z" Addendum.
MATERIAL: Screw - Steel; M-3422-A. Washer - Steel; SAE 1050, SAE 1060 or SAE 1065, heat treated to Rockwell C40 to C50.
For Header Point Specifications see General Specifications.

FORD MOTOR COMPANY
STANDARD PARTS

MACHINE SCREWS
PAN HEAD

CROSS RECESSED
CLASS 2A

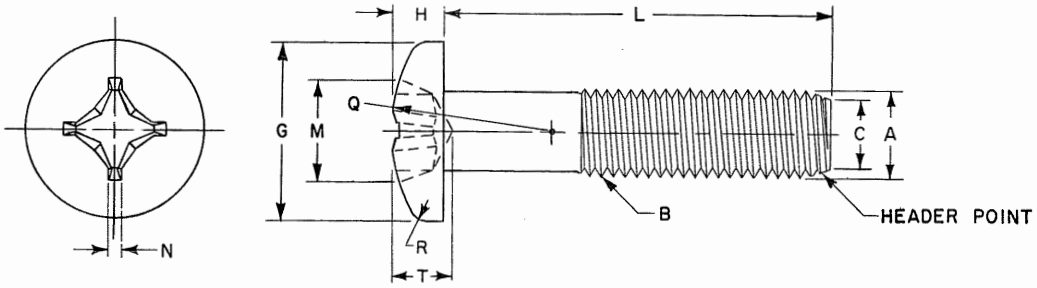

	Screw Size	4	6	8	10		12	1/4		5/16		3/8	
B	Threads Per Inch	40	32	32	24	32	24	20	28	18	24	16	24
A	Major Dia of Thread	.1112 .1061	.1372 .1312	.1631 .1571	.1890 .1818	.1891 .1831	.2150 .2078	.2489 .2408	.2490 .2425	.3113 .3026	.3114 .3042	.3737 .3643	.3739 .3667
	Pitch Dia of Thread	.0950 .0925	.1169 .1141	.1428 .1399	.1619 .1586	.1688 .1658	.1879 .1845	.2164 .2127	.2258 .2225	.2752 .2712	.2843 .2806	.3331 .3287	.3468 .3430
	Pitch Dia of Thread When Plated (Max.)	.0958	.1177	.1437	.1629	.1697	.1889	.2175	.2268	.2764	.2854	.3344	.3479
C	Minor Dia of Thread (Max)	.0805	.0989	.1248	.1379	.1508	.1639	.1876	.2052	.2431	.2603	.2970	.3228
G	Head Diameter	.219 .205	.270 .256	.322 .306	.373 .357	.373 .357	.425 .407	.492 .473	.492 .473	.615 .594	.615 .594	.740 .716	.740 .716
H	Head Height	.080 .070	.097 .087	.115 .105	.133 .122	.133 .122	.151 .139	.175 .162	.175 .162	.218 .203	.218 .203	.261 .244	.261 .244
Q	Radius (Ref.)	.173	.207	.244	.284	.284	.323	.373	.373	.527	.527	.652	.652
R	Radius	.042	.046	.052	.061	.061	.078	.087	.087	.099	.099	.143	.143
M	Recess Diameter	.122 .109	.166 .153	.182 .169	.199 .186	.199 .186	.259 .246	.281 .268	.281 .268	.350 .337	.350 .337	.393 .380	.393 .380
T	Recess Depth	.078 .060	.091 .066	.108 .082	.124 .100	.124 .100	.141 .115	.161 .135	.161 .135	.193 .169	.193 .169	.233 .210	.233 .210
N	Recess Width	.019	.028	.030	.031	.031	.034	.036	.036	.059	.059	.065	.065
	Driver Size	1	2	2	2	2	3	3	3	4	4	4	4
	Penetration Gaging Depth	.071 .053	.080 .055	.097 .071	.113 .089	.113 .089	.124 .098	.144 .118	.144 .118	.173 .149	.173 .149	.213 .190	.213 .190
	MATERIAL	Steel - M 3422-A					FORD PART NUMBERS						
L	1/4 3/8	50500-S 50505-S	50501-S 50506-S	50502-S 50507-S	54503-S 54504-S	50503-S 50508-S	50504-S 50509-S	50510-S	50511-S				
LENGTH	1/2 5/8 3/4 7/8	50512-S	50513-S 50523-S 50533-S 50543-S	50514-S 50524-S 50534-S 50544-S	54505-S 54506-S 54507-S 54508-S	50515-S 50525-S 50535-S 50545-S	50516-S 50526-S 50536-S 50546-S	50517-S 50527-S 50537-S 50547-S	50518-S 50528-S 50538-S 50548-S	50519-S 50529-S 50539-S 50549-S	50520-S 50530-S 50540-S 50550-S	50521-S 50531-S 50541-S 50551-S	50522-S 50532-S 50542-S 50552-S
	1 1 1/4 1 1/2 1 3/4		50553-S	50554-S 50563-S 50572-S 50581-S	54509-S 54510-S 54511-S 54512-S	50555-S 50564-S 50573-S 50582-S	50556-S 50565-S 50574-S 50583-S	50557-S 50566-S 50575-S 50584-S	50558-S 50567-S 50576-S 50585-S	50559-S 50568-S 50577-S 50586-S	50560-S 50569-S 50578-S 50587-S	50561-S 50570-S 50579-S 50588-S	50562-S 50571-S 50580-S 50589-S
	2 2 1/4 2 1/2 2 3/4			50590-S	54513-S 54514-S 54515-S	50591-S 50599-S 50607-S	50592-S 50600-S 50608-S	50593-S 50601-S 50609-S 50615-S	50594-S 50602-S 50610-S 50616-S	50595-S 50603-S 50611-S 50617-S	50596-S 50604-S 50612-S 50618-S	50597-S 50605-S 50613-S 50619-S	50598-S 50606-S 50614-S 50620-S

NOTES: For General Specifications see Page C-950.01. For Finishes see Section "Z" Addendum.
For Header Point Specifications see General Specifications.
Recess penetration gaging values are shown above. For method and gaging equipment see Section "Z" Addendum.

FORD MOTOR COMPANY
STANDARD PARTS

SCREW & SPRING LOCK WASHER ASSEMBLIES
PAN HEAD

CROSS RECESSED
CLASS 2A

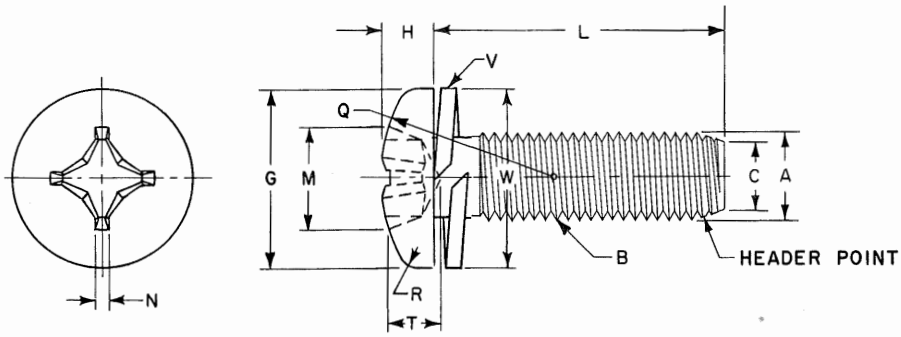

	Screw Size	6	8	10		12	1/4		5/16	
B	Threads Per Inch	32	32	24	32	24	20	28	18	24
A	Major Dia of Thread	.1372 .1312	.1631 .1571	.1890 .1818	.1891 .1831	.2150 .2078	.2489 .2408	.2490 .2425	.3113 .3026	.3114 .3042
	Pitch Dia of Thread	.1169 .1141	.1428 .1399	.1619 .1586	.1688 .1658	.1879 .1845	.2164 .2127	.2258 .2225	.2752 .2712	.2843 .2806
	Pitch Dia of Thread When Plated (Max.)	.1177	.1437	.1629	.1697	.1889	.2175	.2268	.2764	.2854
C	Minor Dia of Thread (Max.)	.0989	.1248	.1379	.1508	.1639	.1876	.2052	.2431	.2603
G	Head Diameter	.270 .256	.322 .306	.373 .357	.373 .357	.425 .407	.492 .473	.492 .473	.615 .594	.615 .594
H	Head Height	.097 .087	.115 .105	.133 .122	.133 .122	.151 .139	.175 .162	.175 .162	.218 .203	.218 .203
Q	Radius (Ref.)	.207	.244	.284	.284	.323	.373	.373	.527	.527
R	Radius	.046	.052	.061	.061	.078	.087	.087	.099	.099
M	Recess Diameter	.166 .153	.182 .169	.199 .186	.199 .186	.259 .246	.281 .268	.281 .268	.350 .337	.350 .337
T	Recess Depth	.091 .066	.108 .082	.124 .100	.124 .100	.141 .115	.161 .135	.161 .135	.193 .169	.193 .169
N	Recess Width	.028	.030	.031	.031	.034	.036	.036	.059	.059
	Driver Size	2	2	2	2	3	3	3	4	4
	Penetration Gaging Depth	.080 .055	.097 .071	.113 .089	.113 .089	.124 .098	.144 .118	.144 .118	.173 .149	.173 .149
W	Washer Diameter	.261 .248	.319 .305	.373 .359	.373 .359	.429 .414	.496 .480	.496 .480	.618 .602	.618 .602
V	Washer Thickness (Min.)	.034	.031	.047	.047	.062	.062	.062	.078	.078
	MATERIAL	See Notes		FORD PART NUMBERS						
L	1/4	50980-S	50981-S							
LENGTH	3/8 1/2 5/8 3/4	50982-S 50988-S 50996-S 51004-S	50983-S 50989-S 50997-S 51005-S	54563-S 54564-S 54565-S 54566-S	50984-S 50990-S 50998-S 51006-S	50985-S 50991-S 50999-S 51007-S	50986-S 50992-S 51000-S 51008-S	50987-S 50993-S 51001-S 51009-S	50994-S 51002-S 51010-S	50995-S 51003-S 51011-S
	7/8 1 1 1/8 1 1/4		51012-S 51019-S	54567-S 54568-S 54569-S 54570-S	51013-S 51020-S 51026-S 51036-S	51014-S 51021-S 51027-S	51015-S 51022-S 51028-S 51032-S	51016-S 51023-S 51029-S 51033-S	51017-S 51024-S 51030-S 51034-S	51018-S 51025-S 51031-S 51035-S
	1 3/8			54571-S	51037-S					

NOTES: For General Specifications see Page C-950.01. For Finishes see Section "Z" Addendum.
MATERIAL: Screw - Steel; M-3422-A. Washer - Steel; SAE 1060, SAE 1065 or SAE 1070, heat treated to Rockwell C45 to C53.
For Header Point Specifications see General Specifications.
Recess penetration gaging values are shown above. For method and gaging equipment see Section "Z" Addendum.

FORD MOTOR COMPANY
STANDARD PARTS

SCREW & EXTERNAL TOOTH WASHER ASSEMBLIES
PAN HEAD

CROSS RECESSED
CLASS 2A

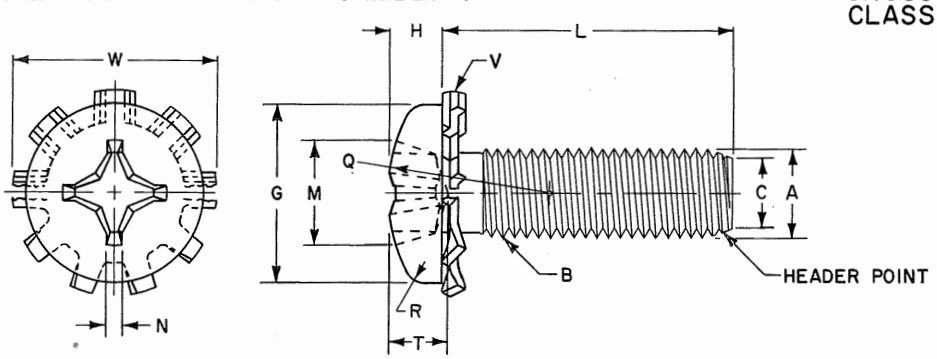

	Screw Size	6	8	10		12	1/4		5/16	
B	Threads Per Inch	32	32	24	32	24	20	28	18	24
A	Major Dia of Thread	.1372 .1312	.1631 .1571	.1890 .1818	.1891 .1831	.2150 .2078	.2489 .2408	.2490 .2425	.3113 .3026	.3114 .3042
	Pitch Dia of Thread	.1169 .1141	.1428 .1399	.1619 .1586	.1688 .1658	.1879 .1845	.2164 .2127	.2258 .2225	.2752 .2712	.2843 .2806
	Pitch Dia of Thread When Plated (Max.)	.1177	.1437	.1629	.1697	.1889	.2175	.2268	.2764	.2854
C	Minor Dia of Thread (Max.)	.0989	.1248	.1379	.1508	.1639	.1876	.2052	.2431	.2603
G	Head Diameter	.270 .256	.322 .306	.373 .357	.373 .357	.425 .407	.492 .473	.492 .473	.615 .594	.615 .594
H	Head Height	.097 .087	.115 .105	.133 .122	.133 .122	.151 .139	.175 .162	.175 .162	.218 .203	.218 .203
Q	Radius (Ref.)	.207	.244	.284	.284	.323	.373	.373	.527	.527
R	Radius	.046	.052	.061	.061	.078	.087	.087	.099	.099
M	Recess Diameter	.166 .153	.182 .169	.199 .186	.199 .186	.259 .246	.281 .268	.281 .268	.350 .337	.350 .337
T	Recess Depth	.091 .066	.108 .082	.124 .100	.124 .100	.141 .115	.161 .135	.161 .135	.193 .169	.193 .169
N	Recess Width	.028	.030	.031	.031	.034	.036	.036	.059	.059
	Driver Size	2	2	2	2	3	3	3	4	4
	Penetration Gaging Depth	.080 .055	.097 .071	.113 .089	.113 .089	.124 .098	.144 .118	.144 .118	.173 .149	.173 .149
W	Washer Diameter	.285 .270	.320 .305	.381 .365	.381 .365	.410 .395	.510 .494	.510 .494	.610 .588	.610 .588
V	Washer Thickness	.020 .014	.023 .018	.024 .018	.024 .018	.027 .020	.028 .023	.028 .023	.034 .028	.034 .028
	MATERIAL	See Notes				FORD PART NUMBERS				
L	1/4	50800-S	50801-S	54539-S	50855-S					
LENGTH	3/8 1/2 5/8 3/4	50802-S 50808-S 50816-S 50824-S	50803-S 50809-S 50817-S 50825-S	54540-S 54541-S 54542-S 54543-S	50804-S 50810-S 50818-S 50826-S	50805-S 50811-S 50819-S 50827-S	50806-S 50812-S 50820-S 50828-S	50807-S 50813-S 50821-S 50829-S	50814-S 50822-S 50830-S	50815-S 50823-S 50831-S
	7/8 1 1 1/8 1 1/4		50832-S 50839-S	54544-S 54545-S 54546-S 54547-S	50833-S 50840-S 50857-S 50856-S	50834-S 50841-S 50846-S	50835-S 50842-S 50847-S 50851-S	50836-S 50843-S 50848-S 50852-S	50837-S 50844-S 50849-S 50853-S	50838-S 50845-S 50850-S 50854-S
	1 3/8			54548-S	50858-S					

NOTES: For General Specifications see Page C-950.01. For Finishes see Section "Z" Addendum.
MATERIAL: Screw - Steel; M-3422-A. Washer - Steel, SAE 1050, SAE 1060 or SAE 1065, heat treated to Rockwell C40 to C50.
For Header Point Specifications see General Specifications.
Recess penetration gaging values are shown above. For method and gaging equipment see Section "Z" Addendum.

FORD MOTOR COMPANY
STANDARD PARTS

MACHINE SCREWS
ROUND HEAD

SLOTTED
CLASS 2A

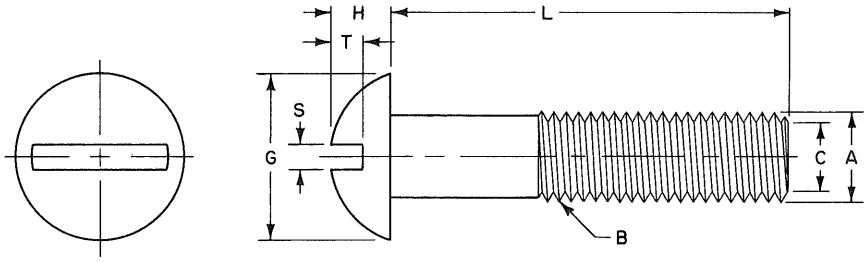

	Screw Size	4	6	8	10		12	1/4		5/16		3/8	
B	Threads Per Inch	40	32	32	24	32	24	20	28	18	24	16	24
A	Major Dia of Thread	.1112 .1061	.1372 .1312	.1631 .1571	.1890 .1818	.1891 .1831	.2150 .2078	.2489 .2408	.2490 .2425	.3113 .3026	.3114 .3042	.3737 .3643	.3739 .3667
	Pitch Dia of Thread	.0950 .0925	.1169 .1141	.1428 .1399	.1619 .1586	.1688 .1658	.1879 .1845	.2164 .2127	.2258 .2225	.2752 .2712	.2843 .2806	.3331 .3287	.3468 .3430
	Pitch Dia of Thread When Plated (Max.)	.0958	.1177	.1437	.1629	.1697	.1889	.2175	.2268	.2764	.2854	.3344	.3479
C	Minor Dia of Thread (Max.)	.0805	.0989	.1248	.1379	.1508	.1639	.1876	.2052	.2431	.2603	.2970	.3228
G	Head Diameter	.211 .193	.260 .240	.309 .287	.359 .334	.359 .334	.408 .382	.472 .443	.472 .443	.590 .557	.590 .557	.708 .670	.708 .670
H	Head Height	.086 .075	.103 .091	.120 .107	.137 .123	.137 .123	.153 .139	.175 .160	.175 .160	.216 .198	.216 .198	.256 .237	.256 .237
S	Slot Width	.039 .031	.048 .039	.054 .045	.060 .050	.060 .050	.067 .056	.075 .064	.075 .064	.084 .072	.084 .072	.094 .081	.094 .081
T	Slot Depth	.058 .044	.068 .051	.077 .058	.087 .065	.087 .065	.096 .073	.109 .082	.109 .082	.132 .099	.132 .099	.155 .117	.155 .117
	MATERIAL	Steel M 3422-A					FORD PART NUMBERS						
L	3/16	26450-S	26451-S	26452-S	53855-S	27053-S	26454-S						
	1/4 5/16 3/8 7/16	26455-S 26460-S 26465-S 26470-S	26456-S 26461-S 26466-S 26471-S	26457-S 26462-S 26467-S 26472-S	53856-S 53857-S 53858-S 53859-S	27058-S 27063-S 27068-S 27073-S	26459-S 26464-S 26469-S 26474-S	26145-S 26147-S 26475-S	27075-S	26146-S 26148-S 26476-S	27076-S	26149-S 26477-S	27077-S
	1/2 9/16 5/8 11/16	26478-S 26486-S 26494-S 26502-S	26479-S 26487-S 26495-S 26503-S	26480-S 26488-S 26496-S 26504-S	53860-S 53861-S 53862-S 53863-S	27081-S 27089-S 27097-S* 27105-S	26482-S 26490-S 26498-S 26506-S	26483-S 26491-S 26499-S 26507-S	27083-S 27091-S 27099-S 27107-S	26484-S 26492-S 26500-S 26508-S	27084-S 27092-S 27100-S 27108-S	26485-S 26493-S 26501-S 26509-S	27085-S 27093-S 27101-S 27109-S
	3/4 7/8 1 1 1/8	26510-S 26526-S 26542-S 26550-S	26511-S 26527-S 26543-S 26551-S	26512-S 26528-S 26544-S 26552-S	53864-S 53865-S 53866-S 53867-S	27113-S 27129-S 27145-S 27153-S	26514-S 26530-S 26546-S 26554-S	26515-S 26531-S 26547-S 26555-S	27115-S 27131-S 27147-S 27155-S	26516-S 26532-S 26548-S 26556-S	27116-S 27132-S 27148-S 27156-S	26517-S 26533-S 26549-S 26557-S	27117-S 27133-S 27149-S 27157-S
LENGTH	1 1/4 1 3/8 1 1/2 1 5/8	26558-S 26566-S 26574-S 26582-S	26559-S 26567-S 26575-S 26583-S	26560-S 26568-S 26576-S 26584-S	53868-S 53869-S 53870-S 53871-S	27161-S 27169-S 27177-S 27185-S	26562-S 26570-S 26578-S 26586-S	26563-S 26571-S 26579-S 26587-S	27163-S 27171-S 27179-S 27187-S	26564-S 26572-S 26580-S 26588-S	27164-S 27172-S 27180-S 27188-S	26565-S 26573-S 26581-S 26589-S	27165-S 27173-S 27181-S 27189-S
	1 3/4 1 7/8 2 2 1/8	26590-S 26598-S 26606-S 26614-S	26591-S 26599-S 26607-S 26615-S	26592-S 26600-S 26608-S 26616-S	53872-S 53873-S 53874-S 53875-S	27193-S 27201-S 27209-S 27217-S	26594-S 26602-S 26610-S 26618-S	26595-S 26603-S 26611-S 26619-S	27195-S 27203-S 27211-S 27219-S	26596-S 26604-S 26612-S 26620-S	27196-S 27204-S 27212-S 27220-S	26597-S 26605-S 26613-S 26621-S	27197-S 27205-S 27213-S 27221-S
	2 1/4 2 3/8 2 1/2 2 5/8	26622-S 26630-S 26638-S 26646-S	26623-S 26631-S 26639-S 26647-S	26624-S 26632-S 26640-S 26648-S	53876-S 53877-S 53878-S 53879-S	27225-S 27233-S 27241-S 27249-S	26626-S 26634-S 26642-S 26650-S	26627-S 26635-S 26643-S 26651-S	27227-S 27235-S 27243-S 27251-S	26628-S 26636-S 26644-S 26652-S	27228-S 27236-S 27244-S 27252-S	26629-S 26637-S 26645-S 26653-S	27229-S 27237-S 27245-S 27253-S
	2 3/4 3 3 1/4 3 1/2	26654-S 26662-S 26670-S 26678-S	26655-S 26663-S 26671-S 26679-S	26656-S 26664-S 26672-S 26680-S	53880-S 53881-S 53882-S 53883-S	27257-S 27265-S 27273-S 27281-S	26658-S 26666-S 26674-S 26682-S	26659-S 26667-S 26675-S 26683-S	27259-S 27267-S 27275-S 27283-S	26660-S 26668-S 26676-S 26684-S	27260-S 27268-S 27276-S 27284-S	26661-S 26669-S 26677-S 26685-S	27261-S 27269-S 27277-S 27285-S
	3 3/4 4 4 1/4 4 1/2	26686-S 26694-S 26702-S 26710-S	26687-S 26695-S 26703-S 26711-S	26688-S 26696-S 26704-S 26712-S	53884-S 53885-S 53886-S 53887-S	27289-S 27297-S 27305-S 27313-S	26690-S 26698-S 26706-S 26714-S	26691-S 26699-S 26707-S 26715-S	27291-S 27299-S 27307-S 27315-S	26692-S 26700-S 26708-S 26716-S	27292-S 27300-S 27308-S 27316-S	26693-S 26701-S 26709-S 26717-S	27293-S 27301-S 27309-S 27317-S
	4 3/4 5 5 1/2 6	26718-S 26726-S 26734-S 26742-S	26719-S 26727-S 26735-S 26743-S	26720-S 26728-S 26736-S 26744-S	53888-S 53889-S 53890-S 53891-S	27321-S 27329-S 27337-S 27345-S	26722-S 26730-S 26738-S 26746-S	26723-S 26731-S 26739-S 26747-S	27323-S 27331-S 27339-S 27347-S	26724-S 26732-S 26740-S 26748-S	27324-S 27332-S 27340-S 27348-S	26725-S 26733-S 26741-S 26749-S	27325-S 27333-S 27341-S 27349-S

NOTES: For General Specifications see Page C-950.01. For Finishes see Section "Z" Addendum.

FORD MOTOR COMPANY
STANDARD PARTS

MACHINE SCREWS
ROUND HEAD

SLOTTED
CLASS 2A

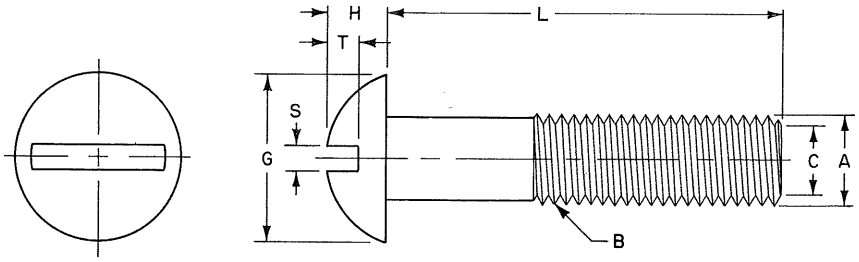

	Screw Size	4	6	8	10		12	1/4		5/16		3/8	
B	Threads Per Inch	40	32	32	24	32	24	20	28	18	24	16	24
A	Major Dia of Thread	.1112 .1061	.1372 .1312	.1631 .1571	.1890 .1818	.1891 .1831	.2150 .2078	.2489 .2408	.2490 .2425	.3113 .3026	.3114 .3042	.3737 .3643	.3739 .3667
	Pitch Dia of Thread	.0950 .0925	.1169 .1141	.1428 .1399	.1619 .1586	.1688 .1658	.1879 .1845	.2164 .2127	.2258 .2225	.2752 .2712	.2843 .2806	.3331 .3287	.3468 .3430
	Pitch Dia of Thread When Plated (Max.)	.0958	.1177	.1437	.1629	.1697	.1889	.2175	.2268	.2764	.2854	.3344	.3479
C	Minor Dia of Thread (Max.)	.0805	.0989	.1248	.1379	.1508	.1639	.1876	.2052	.2431	.2603	.2970	.3228
G	Head Diameter	.211 .193	.260 .240	.309 .287	.359 .334	.359 .334	.408 .382	.472 .443	.472 .443	.590 .557	.590 .557	.708 .670	.708 .670
H	Head Height	.086 .075	.103 .091	.120 .107	.137 .123	.137 .123	.153 .139	.175 .160	.175 .160	.216 .198	.216 .198	.256 .237	.256 .237
S	Slot Width	.039 .031	.048 .039	.054 .045	.060 .050	.060 .050	.067 .056	.075 .064	.075 .064	.084 .072	.084 .072	.094 .081	.094 .081
T	Slot Depth	.058 .044	.068 .051	.077 .058	.087 .065	.087 .065	.096 .073	.109 .082	.109 .082	.132 .099	.132 .099	.155 .117	.155 .117

MATERIAL Brass SAE 80-B — FORD PART NUMBERS

L (LENGTH)	4	6	8	10		12	1/4		5/16		3/8	
3/16	27685-S	27686-S	27687-S	53892-S	27688-S	27689-S						
1/4, 5/16, 3/8, 7/16	27690-S 27695-S 27700-S 27705-S	27691-S 27696-S 27701-S 27706-S	27692-S 27697-S 27702-S 27707-S	53893-S 53894-S 53895-S 53896-S	27693-S 27698-S 27703-S 27708-S	27694-S 27699-S 27704-S 27709-S	27710-S	27350-S	27711-S	27351-S	27712-S	27352-S
1/2, 9/16, 5/8, 11/16	27713-S 27721-S 27729-S 27737-S	27714-S 27722-S 27730-S 27738-S	27715-S 27723-S 27731-S 27739-S	53897-S 53898-S 53899-S 53900-S	27716-S 27724-S 27732-S 27740-S	27717-S 27725-S 27733-S 27741-S	27718-S 27726-S 27734-S 27742-S	27353-S 27356-S 27359-S 27362-S	27719-S 27727-S 27735-S 27743-S	27354-S 27357-S 27360-S 27363-S	27720-S 27728-S 27736-S 27744-S	27355-S 27358-S 27361-S 27364-S
3/4, 7/8, 1, 1 1/8	27745-S 27761-S 27777-S 27785-S	27746-S 27762-S 27778-S 27786-S	27747-S 27763-S 27779-S 27787-S	53901-S 53902-S 53903-S 53904-S	27748-S 27764-S 27780-S 27788-S	27749-S 27765-S 27781-S 27789-S	27750-S 27766-S 27782-S 27790-S	27365-S 27371-S 27377-S 27380-S	27751-S 27767-S 27783-S 27791-S	27366-S 27372-S 27378-S 27381-S	27752-S 27768-S 27784-S 27792-S	27367-S 27373-S 27379-S 27382-S
1 1/4, 1 3/8, 1 1/2, 1 5/8	27793-S 27801-S 27809-S 27817-S	27794-S 27802-S 27810-S 27818-S	27795-S 27803-S 27811-S 27819-S	53905-S 53906-S 53907-S 53908-S	27796-S 27804-S 27812-S 27820-S	27797-S 27805-S 27813-S 27821-S	27798-S 27806-S 27814-S 27822-S	27383-S 27386-S 27389-S 27392-S	27799-S 27807-S 27815-S 27823-S	27384-S 27387-S 27390-S 27393-S	27800-S 27808-S 27816-S 27824-S	27385-S 27388-S 27391-S 27394-S
1 3/4, 1 7/8, 2, 2 1/8	27825-S 27833-S 27841-S 27849-S	27826-S 27834-S 27842-S 27850-S	27827-S 27835-S 27843-S 27851-S	53909-S 53910-S 53911-S 53912-S	27828-S 27836-S 27844-S 27852-S	27829-S 27837-S 27845-S 27853-S	27830-S 27838-S 27846-S 27854-S	27395-S 27398-S 27401-S 27404-S	27831-S 27839-S 27847-S 27855-S	27396-S 27399-S 27402-S 27405-S	27832-S 27840-S 27848-S 27856-S	27397-S 27400-S 27403-S 27406-S
2 1/4, 2 3/8, 2 1/2, 2 5/8	27857-S 27865-S 27873-S 27881-S	27858-S 27866-S 27874-S 27882-S	27859-S 27867-S 27875-S 27883-S	53913-S 53914-S 53915-S 53916-S	27860-S 27868-S 27876-S 27884-S	27861-S 27869-S 27877-S 27885-S	27862-S 27870-S 27878-S 27886-S	27407-S 27410-S 27413-S 27416-S	27863-S 27871-S 27879-S 27887-S	27408-S 27411-S 27414-S 27417-S	27864-S 27872-S 27880-S 27888-S	27409-S 27412-S 27415-S 27418-S
2 3/4, 3, 3 1/4, 3 1/2	27889-S 27897-S 27905-S 27913-S	27890-S 27898-S 27906-S 27914-S	27891-S 27899-S 27907-S 27915-S	53917-S 53918-S 53919-S 53920-S	27892-S 27900-S 27908-S 27916-S	27893-S 27901-S 27909-S 27917-S	27894-S 27902-S 27910-S 27918-S	27419-S 27422-S 27425-S 27428-S	27895-S 27903-S 27911-S 27919-S	27420-S 27423-S 27426-S 27429-S	27896-S 27904-S 27912-S 27920-S	27421-S 27424-S 27427-S 27430-S
3 3/4, 4, 4 1/4, 4 1/2	27921-S 27929-S	27922-S 27930-S	27923-S 27931-S 27937-S 27943-S	53921-S 53922-S 53923-S 53924-S	27924-S 27932-S 27938-S 27944-S	27925-S 27933-S 27939-S 27945-S	27926-S 27934-S 27940-S 27946-S	27431-S 27434-S 27437-S 27440-S	27927-S 27935-S 27941-S 27947-S	27432-S 27435-S 27438-S 27441-S	27928-S 27936-S 27942-S 27948-S	27433-S 27436-S 27439-S 27442-S
4 3/4, 5, 5 1/2, 6			27949-S	53925-S 53926-S 53927-S 53928-S	27950-S 27955-S 27960-S 27965-S	27951-S 27956-S 27961-S 27966-S	27952-S 27957-S 27962-S 27967-S	27443-S 27446-S 27449-S 27452-S	27953-S 27958-S 27963-S 27968-S	27444-S 27447-S 27450-S 27453-S	27954-S 27959-S 27964-S 27969-S	27445-S 27448-S 27451-S 27454-S

NOTES: For General Specifications see Page C-950.01. For Finishes see Section "Z" Addendum.

FORD MOTOR COMPANY
STANDARD PARTS

MACHINE SCREWS
ROUND HEAD

SLOTTED
CLASS 2A

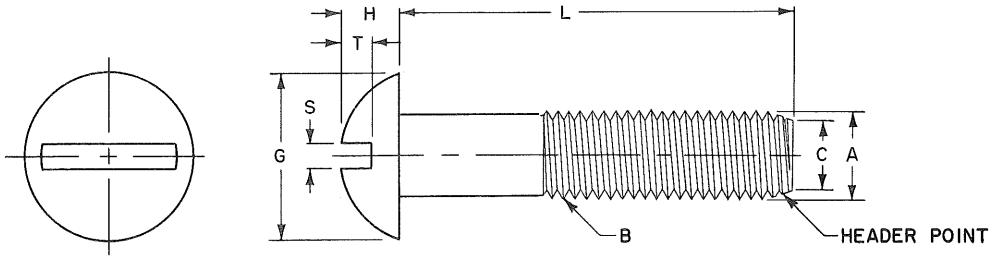

	Screw Size	4	6	8	10		12	1/4		5/16		3/8	
B	Threads Per Inch	40	32	32	24	32	24	20	28	18	24	16	24
A	Major Dia of Thread	.1112 .1061	.1372 .1312	.1631 .1571	.1890 .1818	.1891 .1831	.2150 .2078	.2489 .2408	.2490 .2425	.3113 .3026	.3114 .3042	.3737 .3643	.3739 .3667
	Pitch Dia of Thread	.0950 .0925	.1169 .1141	.1428 .1399	.1619 .1586	.1688 .1658	.1879 .1845	.2164 .2127	.2258 .2225	.2752 .2712	.2843 .2806	.3331 .3287	.3468 .3430
	Pitch Dia of Thread When Plated (Max.)	.0958	.1177	.1437	.1629	.1697	.1889	.2175	.2268	.2764	.2854	.3344	.3479
C	Minor Dia of Thread (Max)	.0805	.0989	.1248	.1379	.1508	.1639	.1876	.2052	.2431	.2603	.2970	.3228
G	Head Diameter	.211 .193	.260 .240	.309 .287	.359 .334	.359 .334	.408 .382	.472 .443	.472 .443	.590 .557	.590 .557	.708 .670	.708 .670
H	Head Height	.086 .075	.103 .091	.120 .107	.137 .123	.137 .123	.153 .139	.175 .160	.175 .160	.216 .198	.216 .198	.256 .237	.256 .237
S	Slot Width	.039 .031	.048 .039	.054 .045	.060 .050	.060 .050	.067 .056	.075 .064	.075 .064	.084 .072	.084 .072	.094 .081	.094 .081
T	Slot Depth	.058 .044	.068 .051	.077 .058	.087 .065	.087 .065	.096 .073	.109 .082	.109 .082	.132 .099	.132 .099	.155 .117	.155 .117
	MATERIAL	Steel M 3422-A					FORD PART NUMBERS						
L	3/16	36776-S	36777-S	36778-S	54153-S	36779-S	36780-S						
	1/4 5/16 3/8 7/16	36781-S 36786-S 36797-S 36808-S	36782-S 36787-S 36798-S 36809-S	36783-S 36788-S 36799-S 36810-S	54154-S 54155-S 54156-S 54157-S	36784-S 36789-S 36800-S 36811-S	36785-S 36790-S 36801-S 36812-S	36791-S 36802-S 36813-S	36792-S 36803-S 36814-S	36793-S 36804-S 36815-S	36794-S 36805-S 36816-S	36795-S 36806-S 36817-S	36796-S 36807-S 36818-S
	1/2 9/16 5/8 11/16	36819-S 36830-S 36841-S 36852-S	36820-S 36831-S 36842-S 36853-S	36821-S 38632-S 36843-S 36854-S	54158-S 54159-S 54160-S 54161-S	36822-S 36833-S 36844-S 36855-S	36823-S 36834-S 36845-S 36856-S	36824-S 36835-S 36846-S 36857-S	36825-S 36836-S 36847-S 36858-S	36826-S 36837-S 36848-S 36859-S	36827-S 36838-S 36849-S 36860-S	36828-S 36839-S 36850-S 36861-S	36829-S 36840-S 36851-S 36862-S
	3/4 7/8 1 1 1/8	36863-S 36885-S 36907-S 36918-S	36864-S 36886-S 36908-S 36919-S	36865-S 36887-S 36909-S 36920-S	54162-S 54163-S 54164-S 54165-S	36866-S 36888-S 36910-S 36921-S	36867-S 36889-S 36911-S 36922-S	36868-S 36890-S 36912-S 36923-S	36869-S 36891-S 36913-S 36924-S	36870-S 36892-S 36914-S 36925-S	36871-S 36893-S 36915-S 36926-S	36872-S 36894-S 36916-S 36927-S	36873-S 36895-S 36917-S 36928-S
LENGTH	1 1/4 1 3/8 1 1/2 1 5/8	36929-S 36940-S 36951-S 36962-S	36930-S 36941-S 36952-S 36963-S	36931-S 36942-S 36953-S 36964-S	54166-S 54167-S 54168-S 54169-S	36932-S 36943-S 36954-S 36965-S	36933-S 36944-S 36955-S 36966-S	36934-S 36945-S 36956-S 36967-S	36935-S 36946-S 36957-S 36968-S	36936-S 36947-S 36958-S 36969-S	36937-S 36948-S 36959-S 36970-S	36938-S 36949-S 36960-S 36971-S	36939-S 36950-S 36961-S 36972-S
	1 3/4 1 7/8 2 2 1/8	36973-S 36984-S 36995-S 37006-S	36974-S 36985-S 36996-S 37007-S	36975-S 36986-S 36997-S 37008-S	54170-S 54171-S 54172-S 54173-S	36976-S 36987-S 36998-S 37009-S	36977-S 36988-S 36999-S 37010-S	36978-S 36989-S 37000-S 37011-S	36979-S 36990-S 37001-S 37012-S	36980-S 36991-S 37002-S 37013-S	36981-S 36992-S 37003-S 37014-S	36982-S 36993-S 37004-S 37015-S	36983-S 36994-S 37005-S 37016-S
	2 1/4 2 3/8 2 1/2 2 5/8	37017-S 37028-S 37039-S 37050-S	37018-S 37029-S 37040-S 37051-S	37019-S 37030-S 37041-S 37052-S	54174-S 54175-S 54176-S 54177-S	37020-S 37031-S 37042-S 37053-S	37021-S 37032-S 37043-S 37054-S	37022-S 37033-S 37044-S 37055-S	37023-S 37034-S 37045-S 37056-S	37024-S 37035-S 37046-S 37057-S	37025-S 37036-S 37047-S 37058-S	37026-S 37037-S 37048-S 37059-S	37027-S 37038-S 37049-S 37060-S
	2 3/4 3 3 1/4 3 1/2	37061-S 37072-S 37083-S 37094-S	37062-S 37073-S 37084-S 37095-S	37063-S 37074-S 37085-S 37096-S	54178-S 54179-S 54180-S 54181-S	37064-S 37075-S 37086-S 37097-S	37065-S 37076-S 37087-S 37098-S	37066-S 37077-S 37088-S 37099-S	37067-S 37078-S 37089-S 37100-S	37068-S 37079-S 37090-S 37101-S	37069-S 37080-S 37091-S 37102-S	37070-S 37081-S 37092-S 37103-S	37071-S 37082-S 37093-S 37104-S
	3 3/4 4 4 1/4 4 1/2	37105-S 37116-S 37127-S 37138-S	37106-S 37117-S 37128-S 37139-S	37107-S 37118-S 37129-S 37140-S	54182-S 54183-S 54184-S 54185-S	37108-S 37119-S 37130-S 37141-S	37109-S 37120-S 37131-S 37142-S	37110-S 37121-S 37132-S 37143-S	37111-S 37122-S 37133-S 37144-S	37112-S 37123-S 37134-S 37145-S	37113-S 37124-S 37135-S 37146-S	37114-S 37125-S 37136-S 37147-S	37115-S 37126-S 37137-S 37148-S
	4 3/4 5 5 1/2 6	37149-S 37160-S 37171-S 37182-S	37150-S 37161-S 37172-S 37183-S	37151-S 37162-S 37173-S 37184-S	54186-S 54187-S 54188-S 54189-S	37152-S 37163-S 37174-S 37185-S	37153-S 37164-S 37175-S 37186-S	37154-S 37165-S 37176-S 37187-S	37155-S 37166-S 37177-S 37188-S	37156-S 37167-S 37178-S 37189-S	37157-S 37168-S 37179-S 37190-S	37158-S 37169-S 37180-S 37191-S	37159-S 37170-S 37181-S 37192-S

NOTES: For General Specifications see Page C-950.01. For Finishes see Section "Z" Addendum.
For Header Point Specifications see General Specifications.

FORD MOTOR COMPANY
STANDARD PARTS

MACHINE SCREWS
ROUND HEAD

SLOTTED
CLASS 2A

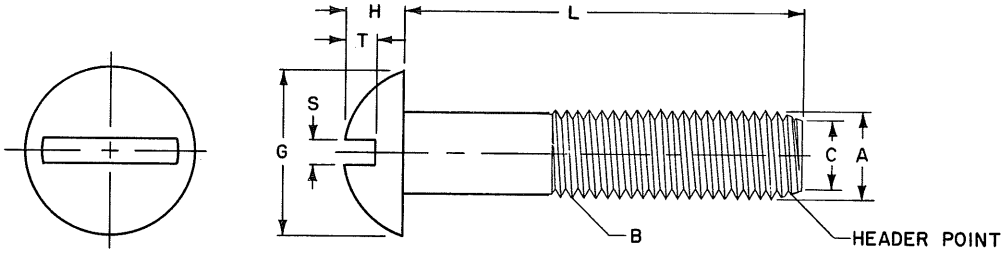

	Screw Size	4	6	8	10		12	1/4		5/16		3/8	
B	Threads Per Inch	40	32	32	24	32	24	20	28	18	24	16	24
A	Major Dia of Thread	.1112 .1061	.1372 .1312	.1631 .1571	.1890 .1818	.1891 .1831	.2150 .2078	.2489 .2408	.2490 .2425	.3113 .3026	.3114 .3042	.3737 .3643	.3739 .3667
	Pitch Dia of Thread	.0950 .0925	.1169 .1141	.1428 .1399	.1619 .1586	.1688 .1658	.1879 .1845	.2164 .2127	.2258 .2225	.2752 .2712	.2843 .2806	.3331 .3287	.3468 .3430
	Pitch Dia of Thread When Plated (Max.)	.0958	.1177	.1437	.1629	.1697	.1889	.2175	.2268	.2764	.2854	.3344	.3479
C	Minor Dia of Thread (Max.)	.0805	.0989	.1248	.1379	.1508	.1639	.1876	.2052	.2431	.2603	.2970	.3228
G	Head Diameter	.211 .193	.260 .240	.309 .287	.359 .334	.359 .334	.408 .382	.472 .443	.472 .443	.590 .557	.590 .557	.708 .670	.708 .670
H	Head Height	.086 .075	.103 .091	.120 .107	.137 .123	.137 .123	.153 .139	.175 .160	.175 .160	.216 .198	.216 .198	.256 .237	.256 .237
S	Slot Width	.039 .031	.048 .039	.054 .045	.060 .050	.060 .050	.067 .056	.075 .064	.075 .064	.084 .072	.084 .072	.094 .081	.094 .081
T	Slot Depth	.058 .044	.068 .051	.077 .058	.087 .065	.087 .065	.096 .073	.109 .082	.109 .082	.132 .099	.132 .099	.155 .117	.155 .117

MATERIAL Brass SAE 80-B

FORD PART NUMBERS

LENGTH	4	6	8	10		12	1/4		5/16		3/8	
3/16	37193-S	37194-S	37195-S	54190-S	37196-S	37197-S						
1/4, 5/16, 3/8, 7/16	37198-S 37203-S 37208-S 37213-S	37199-S 37204-S 37209-S 37214-S	37200-S 37205-S 37210-S 37215-S	54191-S 54192-S 54193-S 54194-S	37201-S 37206-S 37211-S 37216-S	37202-S 37207-S 37212-S 37217-S	37218-S	37219-S	37220-S	37221-S	37222-S	37223-S
1/2, 9/16, 5/8, 11/16	37224-S 37235-S 37246-S 37257-S	37225-S 37236-S 37247-S 37258-S	37226-S 37237-S 37248-S 37259-S	54195-S 54196-S 54197-S 54198-S	37227-S 37238-S 37249-S 37260-S	37228-S 37239-S 37250-S 37261-S	37229-S 37240-S 37251-S 37262-S	37230-S 37241-S 37252-S 37263-S	37231-S 37242-S 37253-S 37264-S	37232-S 37243-S 37254-S 37265-S	37233-S 37244-S 37255-S 37266-S	37234-S 37245-S 37256-S 37267-S
3/4, 7/8, 1, 1 1/8	37268-S 37290-S 37312-S 37323-S	37269-S 37291-S 37313-S 37324-S	37270-S 37292-S 37314-S 37325-S	54199-S 54200-S 54201-S 54202-S	37271-S 37293-S 37315-S 37326-S	37272-S 37294-S 37316-S 37327-S	37273-S 37295-S 37317-S 37328-S	37274-S 37296-S 37318-S 37329-S	37275-S 37297-S 37319-S 37330-S	37276-S 37298-S 37320-S 37331-S	37277-S 37299-S 37321-S 37332-S	37278-S 37300-S 37322-S 37333-S
1 1/4, 1 3/8, 1 1/2, 1 5/8	37334-S 37345-S 37356-S 37367-S	37335-S 37346-S 37357-S 37368-S	37336-S 37347-S 37358-S 37369-S	54203-S 54204-S 54205-S 54206-S	37337-S 37348-S 37359-S 37370-S	37338-S 37349-S 37360-S 37371-S	37339-S 37350-S 37361-S 37372-S	37340-S 37351-S 37362-S 37373-S	37341-S 37352-S 37363-S 37374-S	37342-S 37353-S 37364-S 37375-S	37343-S 37354-S 37365-S 37376-S	37344-S 37355-S 37366-S 37377-S
1 3/4, 1 7/8, 2, 2 1/8	37378-S 37389-S 37400-S 37411-S	37379-S 37390-S 37401-S 37412-S	37380-S 37391-S 37402-S 37413-S	54207-S 54208-S 54209-S 54210-S	37381-S 37392-S 37403-S 37414-S	37382-S 37393-S 37404-S 37415-S	37383-S 37394-S 37405-S 37416-S	37384-S 37395-S 37406-S 37417-S	37385-S 37396-S 37407-S 37418-S	37386-S 37397-S 37408-S 37419-S	37387-S 37398-S 37409-S 37420-S	37388-S 37399-S 37410-S 37421-S
2 1/4, 2 3/8, 2 1/2, 2 5/8	37422-S 37433-S 37444-S 37455-S	37423-S 37434-S 37445-S 37456-S	37424-S 37435-S 37446-S 37457-S	54211-S 54212-S 54213-S 54214-S	37425-S 37436-S 37447-S 37458-S	37426-S 37437-S 37448-S 37459-S	37427-S 37438-S 37449-S 37460-S	37428-S 37439-S 37450-S 37461-S	37429-S 37440-S 37451-S 37462-S	37430-S 37441-S 37452-S 37463-S	37431-S 37442-S 37453-S 37464-S	37432-S 37443-S 37454-S 37465-S
2 3/4, 3, 3 1/4, 3 1/2	37466-S 37477-S 37488-S 37499-S	37467-S 37478-S 37489-S 37500-S	37468-S 37479-S 37490-S 37501-S	54215-S 54216-S 54217-S 54218-S	37469-S 37480-S 37491-S 37502-S	37470-S 37481-S 37492-S 37503-S	37471-S 37482-S 37493-S 37504-S	37472-S 37483-S 37494-S 37505-S	37473-S 37484-S 37495-S 37506-S	37474-S 37485-S 37496-S 37507-S	37475-S 37486-S 37497-S 37508-S	37476-S 37487-S 37498-S 37509-S
3 3/4, 4, 4 1/4, 4 1/2	37510-S 37521-S 37532-S 37543-S	37511-S 37522-S 37533-S 37544-S	37512-S 37523-S 37534-S 37545-S	54219-S 54220-S 54221-S 54222-S	37513-S 37524-S 37535-S 37546-S	37514-S 37525-S 37536-S 37547-S	37515-S 37526-S 37537-S 37548-S	37516-S 37527-S 37538-S 37549-S	37517-S 37528-S 37539-S 37550-S	37518-S 37529-S 37540-S 37551-S	37519-S 37530-S 37541-S 37552-S	37520-S 37531-S 37542-S 37553-S
4 3/4, 5, 5 1/2, 6	37554-S 37565-S 37576-S 37587-S	37555-S 37566-S 37577-S 37588-S	37556-S 37567-S 37578-S 37589-S	54223-S 54224-S 54225-S 54226-S	37557-S 37568-S 37579-S 37590-S	37558-S 37569-S 37580-S 37591-S	37559-S 37570-S 37581-S 37592-S	37560-S 37571-S 37582-S 37593-S	37561-S 37572-S 37583-S 37594-S	37562-S 37573-S 37584-S 37595-S	37563-S 37574-S 37585-S 37596-S	37564-S 37575-S 37586-S 37597-S

NOTES: For General Specifications see Page C-950.01. For Finishes see Section "Z" Addendum.
For Header Point Specifications see General Specifications.

FORD MOTOR COMPANY
STANDARD PARTS

SCREW & SPRING LOCK WASHER ASSEMBLIES
ROUND HEAD

SLOTTED
CLASS 2A

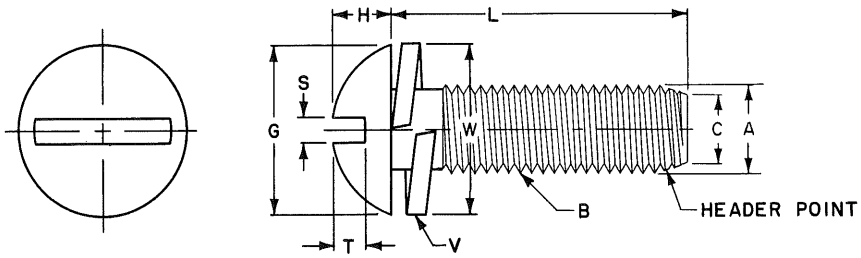

	Screw Size	6	8	10		12	1/4		5/16	
B	Threads Per Inch	32	32	24	32	24	20	28	18	24
A	Major Dia of Thread	.1372 .1312	.1631 .1571	.1890 .1818	.1891 .1831	.2150 .2078	.2489 .2408	.2490 .2425	.3113 .3026	.3114 .3042
	Pitch Dia of Thread	.1169 .1141	.1428 .1399	.1619 .1586	.1688 .1658	.1879 .1845	.2164 .2127	.2258 .2225	.2752 .2712	.2843 .2086
	Pitch Dia of Thread When Plated (Max.)	.1177	.1437	.1629	.1697	.1889	.2175	.2268	.2764	.2854
C	Minor Dia of Thread (Max.)	.0989	.1248	.1379	.1508	.1639	.1876	.2052	.2431	.2603
G	Head Diameter	.260 .240	.309 .287	.359 .334	.359 .334	.408 .382	.472 .443	.472 .443	.590 .557	.590 .557
H	Head Height	.103 .091	.120 .107	.137 .123	.137 .123	.153 .139	.175 .160	.175 .160	.216 .198	.216 .198
S	Slot Width	.048 .039	.054 .045	.060 .050	.060 .050	.067 .056	.075 .064	.075 .064	.084 .072	.084 .072
T	Slot Depth	.068 .051	.077 .058	.087 .065	.087 .065	.096 .073	.109 .082	.109 .082	.132 .099	.132 .099
W	Washer Diameter	.261 .248	.319 .305	.373 .359	.373 .359	.397 .382	.464 .448	.464 .448	.578 .562	.578 .562
V	Washer Thickness (Min.)	.034	.031	.047	.047	.047	.062	.062	.070	.070
	MATERIAL	See Notes				FORD PART NUMBERS				
L	1/4	43321-S	43226-S	54603-S	43322-S					
LENGTH	3/8 1/2 5/8 3/4	43323-S 43325-S 43328-S 43334-S	43227-S 43231-S 43329-S 43335-S	54604-S 54605-S 54606-S 54607-S	43228-S 43232-S 43330-S 43266-S	43229-S 43233-S 43234-S 43336-S	43324-S 43326-S 43235-S 43337-S	43230-S 43327-S 43331-S 43338-S	43332-S 43339-S	43333-S 43340-S
	7/8 1 1 1/8 1 1/4		43341-S 43346-S	54608-S 54609-S 54610-S	43342-S 43347-S 43351-S	43259-S 43236-S 43352-S	43343-S 43348-S 43353-S 43357-S	43344-S 43349-S 43354-S 43358-S	43345-S 43350-S 43355-S 43359-S	43380-S 43237-S 43356-S 43360-S

NOTES: For General Specifications see Page C-950.01. For Finishes see Section "Z" Addendum.
MATERIAL: Screw - Steel; M-3422-A. Washer - Steel; SAE 1060, SAE 1065 or SAE 1070, heat treated to Rockwell C45 to C53.
For Header Point Specifications see General Specifications.

FORD MOTOR COMPANY
STANDARD PARTS

SCREW & EXTERNAL TOOTH WASHER ASSEMBLIES
ROUND HEAD

SLOTTED
CLASS 2A

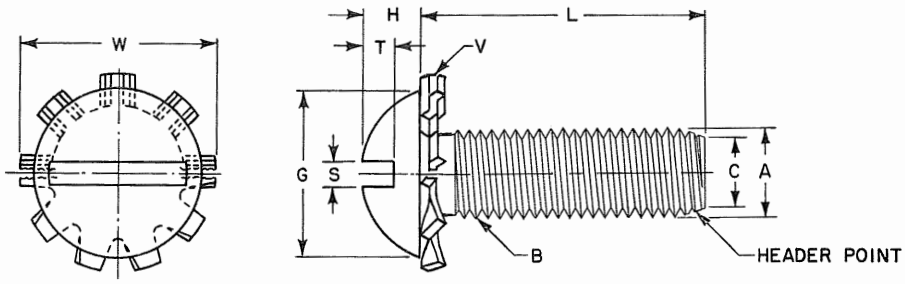

	Screw Size	6	8	10		12	1/4		5/16	
B	Threads Per Inch	32	32	24	32	24	20	28	18	24
A	Major Dia of Thread	.1372 .1312	.1631 .1571	.1890 .1818	.1891 .1831	.2150 .2078	.2489 .2408	.2490 .2425	.3113 .3026	.3114 .3042
	Pitch Dia of Thread	.1169 .1141	.1428 .1399	.1619 .1586	.1688 .1658	.1879 .1845	.2164 .2127	.2258 .2225	.2752 .2712	.2843 .2806
	Pitch Dia of Thread When Plated (Max.)	.1177	.1437	.1629	.1697	.1889	.2175	.2268	.2764	.2854
C	Minor Dia of Thread (Max.)	.0989	.1248	.1379	.1508	.1639	.1876	.2052	.2431	.2603
G	Head Diameter	.260 .240	.309 .287	.359 .334	.359 .334	.408 .382	.472 .443	.472 .443	.590 .557	.590 .557
H	Head Height	.103 .091	.120 .107	.137 .123	.137 .123	.153 .139	.175 .160	.175 .160	.216 .198	.216 .198
S	Slot Width	.048 .039	.054 .045	.060 .050	.060 .050	.067 .056	.075 .064	.075 .064	.084 .072	.084 .072
T	Slot Depth	.068 .051	.077 .058	.087 .065	.087 .065	.096 .073	.109 .082	.109 .082	.132 .099	.132 .099
W	Washer Diameter	.285 .270	.320 .305	.381 .365	.381 .365	.410 .395	.475 .460	.475 .460	.610 .588	.610 .588
V	Washer Thickness	.020 .014	.023 .018	.024 .018	.024 .018	.027 .020	.028 .023	.028 .023	.034 .028	.034 .028
	MATERIAL	See Notes				FORD PART NUMBERS				
L	1/4	43272-S	42648-S	54418-S	43273-S	43274-S				
LENGTH	3/8 1/2 5/8 3/4	43275-S 43277-S 43281-S 43285-S	42649-S 42653-S 43282-S 43286-S	54419-S 54420-S 54421-S 54422-S	42650-S 42654-S 43283-S 43287-S	42651-S 42655-S 42656-S 43270-S	43276-S 43278-S 42657-S 43288-S	42652-S 42900-S 42909-S 43289-S	43279-S 43284-S 43290-S	43280-S 42658-S 43291-S
	7/8 1 1 1/8 1 1/4	43292-S 43298-S	43293-S 43379-S	54423-S 54424-S 54425-S 54426-S	43294-S 43299-S 43303-S 43309-S	42902-S 42659-S 43304-S 43310-S	43295-S 42901-S 43305-S 43311-S	43271-S 43300-S 43306-S 43312-S	43296-S 43301-S 43307-S 43313-S	43297-S 43302-S 43308-S 43314-S

NOTES: For General Specifications see Page C-950.01. For Finishes see Section "Z" Addendum.
MATERIAL: Screw - Steel; M-3422-A. Washer - Steel; SAE 1060, SAE 1065 or SAE 1070, heat treated to Rockwell C45 to C53.
For Header Point Specifications see General Specifications.

FORD MOTOR COMPANY
STANDARD PARTS

MACHINE SCREWS
ROUND HEAD

CROSS RECESSED
CLASS 2A

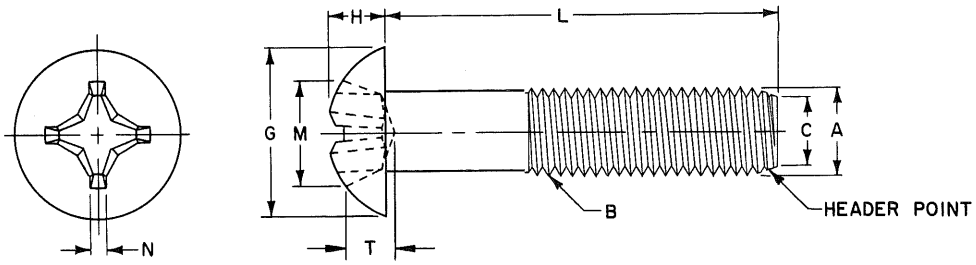

	Screw Size	4	6	8	10		12	1/4		5/16		3/8	
B	Threads Per Inch	40	32	32	24	32	24	20	28	18	24	16	24
A	Major Dia of Thread	.1112 .1061	.1372 .1312	.1631 .1571	.1890 .1818	.1891 .1831	.2150 .2078	.2489 .2408	.2490 .2425	.3113 .3026	.3114 .3042	.3737 .3643	.3739 .3667
	Pitch Dia of Thread	.0950 .0925	.1169 .1141	.1428 .1399	.1619 .1586	.1688 .1658	.1879 .1845	.2164 .2127	.2258 .2225	.2752 .2712	.2843 .2806	.3331 .3287	.3468 .3430
	Pitch Dia of Thread When Plated (Max.)	.0958	.1177	.1437	.1629	.1697	.1889	.2175	.2268	.2764	.2854	.3344	.3479
C	Minor Dia of Thread (Max.)	.0805	.0989	.1248	.1379	.1508	.1639	.1876	.2052	.2431	.2603	.2970	.3228
G	Head Diameter	.211 .193	.260 .240	.309 .287	.359 .334	.359 .334	.408 .382	.472 .443	.472 .443	.590 .557	.590 .557	.708 .670	.708 .670
H	Head Height	.086 .075	.103 .091	.120 .107	.137 .123	.137 .123	.153 .139	.175 .160	.175 .160	.216 .198	.216 .198	.256 .237	.256 .237
M	Recess Diameter	.118 .105	.162 .149	.178 .165	.195 .182	.195 .182	.249 .236	.268 .255	.268 .255	.308 .295	.308 .295	.387 .374	.387 .374
T	Recess Depth	.072 .053	.084 .056	.101 .075	.119 .093	.119 .093	.125 .099	.147 .121	.147 .121	.187 .161	.187 .161	.228 .202	.228 .202
N	Recess Width (Min.)	.019	.027	.030	.031	.031	.032	.034	.034	.040	.040	.064	.064
	Driver Size	1	2	2	2	2	3	3	3	3	3	4	4
	Penetration Gaging Depth	.065 .046	.073 .045	.090 .064	.108 .082	.108 .082	.108 .082	.130 .104	.130 .104	.170 .144	.170 .144	.208 .182	.208 .182
	MATERIAL	Steel M 3422-A					FORD PART NUMBERS						
L	1/4 3/8	50250-S 50255-S	50251-S 50256-S	50252-S 50257-S	54478-S 54479-S	50253-S 50258-S	50254-S 50259-S	50260-S	50261-S	50262-S	50263-S		
LENGTH	1/2 5/8 3/4 7/8	50264-S	50265-S 50275-S 50285-S 50295-S	50266-S 50276-S 50286-S 50296-S	54480-S 54481-S 54482-S 54483-S	50267-S 50277-S 50287-S 50297-S	50268-S 50278-S 50288-S 50298-S	50269-S 50279-S 50289-S 50299-S	50270-S 50280-S 50290-S 50300-S	50271-S 50281-S 50291-S 50301-S	50272-S 50282-S 50292-S 50302-S	50273-S 50283-S 50293-S 50303-S	50274-S 50284-S 50294-S 50304-S
	1 1 1/4 1 1/2 1 3/4		50305-S 50315-S	50306-S 50316-S 50325-S 50334-S	54484-S 54485-S 54486-S 54487-S	50307-S 50317-S 50326-S 50335-S	50308-S 50318-S 50327-S 50336-S	50309-S 50319-S 50328-S 50337-S	50310-S 50320-S 50329-S 50338-S	50311-S 50321-S 50330-S 50339-S	50312-S 50322-S 50331-S 50340-S	50313-S 50323-S 50332-S 50341-S	50314-S 50324-S 50333-S 50342-S
	2 2 1/4 2 1/2 2 3/4			50343-S	54488-S 54489-S 54490-S 54491-S	50344-S 50352-S 50360-S 50368-S	50345-S 50353-S 50361-S 50369-S	50346-S 50354-S 50362-S 50370-S	50347-S 50355-S 50363-S 50371-S	50348-S 50356-S 50364-S 50372-S	50349-S 50357-S 50365-S 50373-S	50350-S 50358-S 50366-S 50374-S	50351-S 50359-S 50367-S 50375-S

NOTES: For General Specifications see Page C-950.01. For Finishes see Section "Z" Addendum.
For Header Point Specifications see General Specifications.
Recess penetration gaging values are shown above. For method and gaging equipment see Section "Z" Addendum.

FORD MOTOR COMPANY
STANDARD PARTS

SCREW & SPRING LOCK WASHER ASSEMBLIES
ROUND HEAD

CROSS RECESSED
CLASS 2A

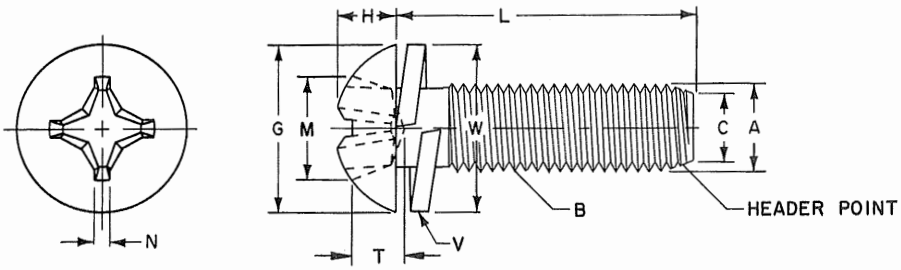

	Screw Size	6	8	10		12	1/4		5/16	
B	Threads Per Inch	32	32	24	32	24	20	28	18	24
A	Major Dia of Thread	.1372 .1312	.1631 .1571	.1890 .1818	.1891 .1831	.2150 .2078	.2489 .2408	.2490 .2425	.3113 .3026	.3114 .3042
	Pitch Dia of Thread	.1169 .1141	.1428 .1399	.1619 .1586	.1688 .1658	.1879 .1845	.2164 .2127	.2258 .2225	.2752 .2712	.2843 .2806
	Pitch Dia of Thread When Plated (Max.)	.1177	.1437	.1629	.1697	.1889	.2175	.2268	.2764	.2854
C	Minor Dia of Thread (Max.)	.0989	.1248	.1379	.1508	.1639	.1876	.2052	.2431	.2603
G	Head Diameter	.260 .240	.309 .287	.359 .334	.359 .334	.408 .382	.472 .443	.472 .443	.590 .557	.590 .557
H	Head Height	.103 .091	.120 .107	.137 .123	.137 .123	.153 .139	.175 .160	.175 .160	.216 .198	.216 .198
M	Recess Diameter	.162 .149	.178 .165	.195 .182	.195 .182	.249 .236	.268 .255	.268 .255	.308 .295	.308 .295
T	Recess Depth	.084 .056	.101 .075	.119 .093	.119 .093	.125 .099	.147 .121	.147 .121	.187 .161	.187 .161
N	Recess Width (Min.)	.027	.030	.031	.031	.032	.034	.034	.040	.040
	Driver Size	2	2	2	2	3	3	3	3	3
	Penetration Gaging Depth	.073 .045	.090 .064	.108 .082	.108 .082	.108 .082	.130 .104	.130 .104	.170 .144	.170 .144
W	Washer Diameter	.261 .248	.319 .305	.373 .359	.373 .359	.397 .382	.464 .448	.464 .448	.578 .562	.578 .562
V	Washer Thickness (Min.)	.034	.031	.047	.047	.047	.062	.062	.070	.070
	MATERIAL	See Notes				FORD PART NUMBERS				
L	1/4	50860-S	50861-S							
LENGTH	3/8 1/2 5/8 3/4	50862-S 50868-S 50876-S 50884-S	50863-S 50869-S 50877-S 50885-S	54549-S 54550-S 54551-S 54552-S	50864-S 50870-S 50878-S 50886-S	50865-S 50871-S 50879-S 50887-S	50866-S 50872-S 50880-S 50888-S	50867-S 50873-S 50881-S 50889-S	50874-S 50882-S 50890-S	50875-S 50883-S 50891-S
	7/8 1 1 1/8 1 1/4		50892-S 50899-S	54553-S 54554-S 54555-S	50893-S 50900-S 50906-S	50894-S 50901-S 50907-S	50895-S 50902-S 50908-S 50912-S	50896-S 50903-S 50909-S 50913-S	50897-S 50904-S 50910-S 50914-S	50898-S 50905-S 50911-S 50915-S

NOTES: For General Specifications see Page C-950.01. For Finishes see Section "Z" Addendum.
MATERIAL: Screw - Steel; M-3422-A. Washer - Steel; SAE 1060, SAE 1065 or SAE 1070, heat treated to Rockwell C45 to C53.
For Header Point Specifications see General Specifications.
Recess penetration gaging values are shown above. For method and gaging equipment see Section Addendum.

FORD MOTOR COMPANY
STANDARD PARTS

SCREW & EXTERNAL TOOTH WASHER ASSEMBLIES
ROUND HEAD

CROSS RECESSED
CLASS 2A

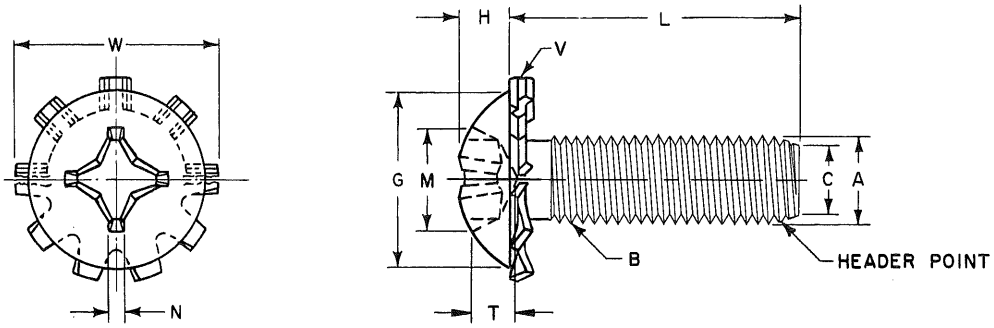

	Screw Size	6	8	10		12	1/4		5/16	
B	Threads Per Inch	32	32	24	32	24	20	28	18	24
A	Major Dia of Thread	.1372 .1312	.1631 .1571	.1890 .1818	.1891 .1831	.2150 .2078	.2489 .2408	.2490 .2425	.3113 .3026	.3114 .3042
	Pitch Dia of Thread	.1169 .1141	.1428 .1399	.1619 .1586	.1688 .1658	.1879 .1845	.2164 .2127	.2258 .2225	.2752 .2712	.2843 .2806
	Pitch Dia of Thread When Plated (Max.)	.1177	.1437	.1629	.1697	.1889	.2175	.2268	.2764	.2854
C	Minor Dia of Thread (Max.)	.0989	.1248	.1379	.1508	.1639	.1876	.2052	.2431	.2603
G	Head Diameter	.260 .240	.309 .287	.359 .334	.359 .334	.408 .382	.472 .443	.472 .443	.590 .557	.590 .557
H	Head Height	.103 .091	.120 .107	.137 .123	.137 .123	.153 .139	.175 .160	.175 .160	.216 .198	.216 .198
M	Recess Diameter	.162 .149	.178 .165	.195 .182	.195 .182	.249 .236	.268 .255	.268 .255	.308 .295	.308 .295
T	Recess Depth	.084 .056	.101 .075	.119 .093	.119 .093	.125 .099	.147 .121	.147 .121	.187 .161	.187 .161
N	Recess Width (Min.)	.027	.030	.031	.031	.032	.034	.034	.040	.040
	Driver Size	2	2	2	2	3	3	3	3	3
	Penetration Gaging Depth	.073 .045	.090 .064	.108 .082	.108 .082	.108 .082	.130 .104	.130 .104	.170 .144	.170 .144
W	Washer Diameter	.285 .270	.320 .305	.381 .365	.381 .365	.410 .395	.475 .460	.475 .460	.610 .588	.610 .588
V	Washer Thickness	.020 .014	.023 .018	.024 .018	.024 .018	.027 .020	.028 .023	.028 .023	.034 .028	.034 .028
	MATERIAL	See Notes				FORD PART NUMBERS				
L	1/4	50625-S	50626-S	54516-S	50627-S					
LENGTH	3/8 1/2 5/8 3/4	50628-S 50636-S 50644-S 50652-S	50629-S 50637-S 50645-S 50653-S	54517-S 54518-S 54519-S 54520-S	50630-S 50638-S 50646-S 50654-S	50631-S 50639-S 50647-S 50655-S	50632-S 50640-S 50648-S 50656-S	50633-S 50641-S 50649-S 50657-S	50634-S 50642-S 50650-S 50658-S	50635-S 50643-S 50651-S 50659-S
	7/8 1 1 1/8 1 1/4	50660-S 50668-S	50661-S 50669-S 50676-S 50683-S	54521-S 54522-S 54523-S 54524-S	50662-S 50670-S 50677-S 50684-S	50663-S 50671-S 50678-S 50685-S	50664-S 50672-S 50679-S 50686-S	50665-S 50673-S 50680-S 50687-S	50666-S 50674-S 50681-S 50688-S	50667-S 50675-S 50682-S 50689-S

NOTES: For General Specifications see Page C-950.01. For Finishes see Section "Z" Addendum.
MATERIAL: Screw - Steel; M-3422-A. Washer - Steel; SAE 1050, SAE 1060 or SAE 1065, heat treated to Rockwell C40 to C50.
For Header Point Specifications see General Specifications.
Recess penetration gaging values are shown above. For method and gaging equipment see Section "Z" Addendum.

FORD MOTOR COMPANY
STANDARD PARTS

SET SCREWS
SQUARE HEAD

CLASS 3A

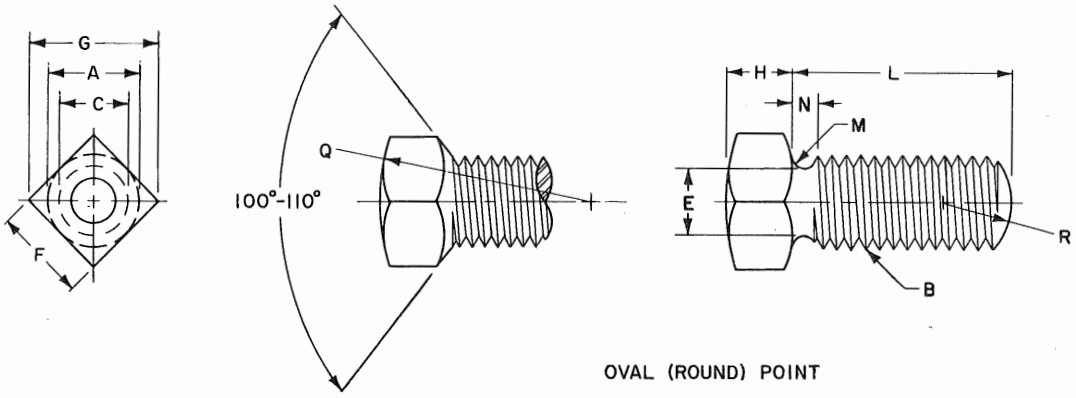

OVAL (ROUND) POINT

	Screw Size	1/4	5/16	3/8	7/16	1/2	9/16	5/8	3/4	7/8	1
B	Threads Per Inch	20	18	16	14	13	12	11	10	9	8
A	Major Dia of Threads	.2500 .2419	.3125 .3038	.3750 .3656	.4375 .4272	.5000 .4891	.5625 .5511	.6250 .6129	.7500 .7371	.8750 .8611	1.0000 .9850
	Pitch Dia of Thread	.2175 .2147	.2764 .2734	.3344 .3311	.3911 .3876	.4500 .4463	.5084 .5045	.5660 .5619	.6850 .6806	.8028 .7981	.9188 .9137
C	Minor Dia of Thread (Max.)	.1887	.2443	.2983	.3499	.4056	.4603	.5135	.6273	.7387	.8466
F	Width Across Flats	.2500 .2410	.3125 .3020	.3750 .3620	.4375 .4230	.5000 .4840	.5625 .5450	.6250 .6060	.7500 .7290	.8750 .8520	1.0000 .9740
G	Width Across Corners (Min.)	.331	.415	.497	.581	.665	.748	.833	1.001	1.170	1.337
H	Head Height	.196 .178	.245 .224	.293 .270	.341 .315	.389 .361	.437 .407	.485 .452	.582 .544	.678 .635	.774 .726
Q	Radius of Head	.625	.781	.938	1.094	1.250	1.406	1.562	1.875	2.188	2.500
E	Diameter of Neck Relief	.185 .170	.240 .225	.294 .279	.345 .330	.400 .385	.454 .439	.507 .492	.620 .605	.731 .716	.838 .823
M	Radius of Neck Relief (Max.)	.032	.036	.041	.046	.050	.054	.059	.065	.072	.081
N	Width of Neck Relief (Min.)	.100	.111	.125	.143	.154	.167	.182	.200	.222	.250
R	Radius (Oval Point)	.188	.234	.281	.328	.375	.422	.469	.563	.656	.750

	MATERIAL	See Notes				FORD PART NUMBERS			OVAL (ROUND) POINT		
L	1/4 5/16 3/8 7/16	91125-S 91128-S 91132-S 91137-S	91126-S 91129-S 91133-S 91138-S	91127-S 91130-S 91134-S 91139-S	91131-S 91135-S 91140-S	91136-S 91141-S	91142-S				
	1/2 9/16 5/8 11/16	91143-S 91150-S 91158-S 91167-S	91144-S 91151-S 91159-S 91168-S	91145-S 91152-S 91160-S 91169-S	91146-S 91153-S 91161-S 91170-S	91147-S 91154-S 91162-S 91171-S	91148-S 91155-S 91163-S 91172-S	91149-S 91156-S 91164-S 91173-S	91157-S 91165-S 91174-S	91166-S 91175-S	91176-S
LENGTH	3/4 13/16 7/8 1	91177-S 91187-S 91197-S 91207-S	91178-S 91188-S 91198-S 91208-S	91179-S 91189-S 91199-S 91209-S	91180-S 91190-S 91200-S 91210-S	91181-S 91191-S 91201-S 91211-S	91182-S 91192-S 91202-S 91212-S	91183-S 91193-S 91203-S 91213-S	91184-S 91194-S 91204-S 91214-S	91185-S 91195-S 91205-S 91215-S	91186-S 91196-S 91206-S 91216-S
	1 1/8 1 1/4 1 3/8 1 1/2	91217-S 91227-S 91237-S 91247-S	91218-S 91228-S 91238-S 91248-S	91219-S 91229-S 91239-S 91249-S	91220-S 91230-S 91240-S 91250-S	91221-S 91231-S 91241-S 91251-S	91222-S 91232-S 91242-S 91252-S	91223-S 91233-S 91243-S 91253-S	91224-S 91234-S 91244-S 91254-S	91225-S 91235-S 91245-S 91255-S	91226-S 91236-S 91246-S 91256-S
	1 5/8 1 3/4 1 7/8 2	91257-S 91267-S 91277-S 91287-S	91258-S 91268-S 91278-S 91288-S	91259-S 91269-S 91279-S 91289-S	91260-S 91270-S 91280-S 91290-S	91261-S 91271-S 91281-S 91291-S	91262-S 91272-S 91282-S 91292-S	91263-S 91273-S 91283-S 91293-S	91264-S 91274-S 91284-S 91294-S	91265-S 91275-S 91285-S 91295-S	91266-S 91276-S 91286-S 91296-S
	2 1/4 2 1/2 2 3/4 3		91297-S	91298-S 91306-S	91299-S 91307-S 91314-S	91300-S 91308-S 91315-S 91321-S	91301-S 91309-S 91316-S 91322-S	91302-S 91310-S 91317-S 91323-S	91303-S 91311-S 91318-S 91324-S	91304-S 91312-S 91319-S 91325-S	91305-S 91313-S 91320-S 91326-S
	3 1/4 3 1/2 3 3/4 4						91327-S	91328-S 91332-S	91329-S 91333-S 91336-S	91330-S 91334-S 91337-S 91339-S	91331-S 91335-S 91338-S 91340-S

MATERIAL: Steel - M-3500-B (unhardened parts). When a case hardened set screw is desired, specify Finish S-18 or S-34, in which case the material shall be SAE 1018 (M-2K2-F) Steel.
THREADS: Threads shall be gaged by virtual gaging methods. Where parts are plated, dimensions apply after plating.
For General Specifications see page C-950.01. For Finishes see Section "Z" Addendum.

FORD MOTOR COMPANY
STANDARD PARTS

SET SCREWS
SQUARE HEAD

CLASS 3A

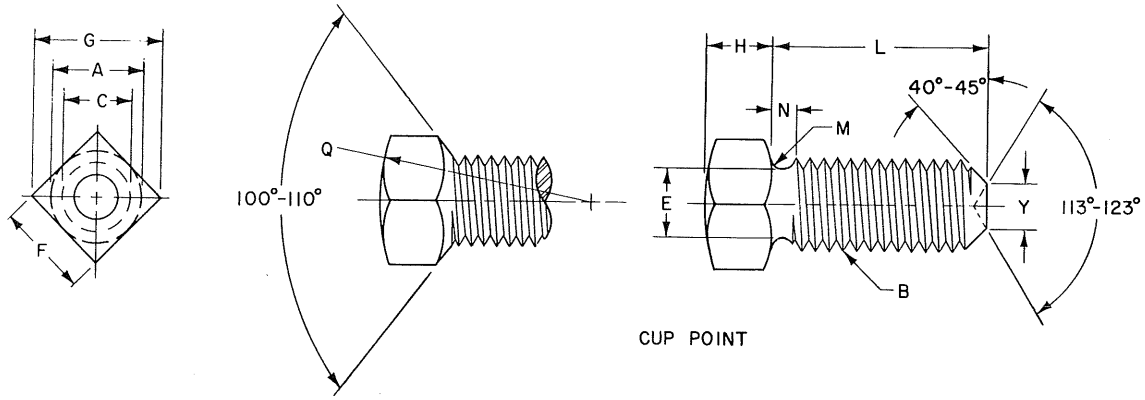

	Screw Size	1/4	5/16	3/8	7/16	1/2	9/16	5/8	3/4	7/8	1
B	Threads Per Inch	20	18	16	14	13	12	11	10	9	8
A	Major Dia of Thread	.2500 .2419	.3125 .3038	.3750 .3656	.4375 .4272	.5000 .4891	.5625 .5511	.6250 .6129	.7500 .7371	.8750 .8611	1.0000 .9850
	Pitch Dia of Thread	.2175 .2147	.2764 .2734	.3344 .3311	.3911 .3876	.4500 .4463	.5084 .5045	.5660 .5619	.6850 .6806	.8028 .7981	.9188 .9137
C	Minor Dia of Thread (Max.)	.1887	.2443	.2983	.3499	.4056	.4603	.5135	.6273	.7287	.8466
F	Width Across Flats	.2500 .2410	.3125 .3020	.3750 .3620	.4375 .4230	.5000 .4840	.5625 .5450	.6250 .6060	.7500 .7290	.8750 .8520	1.0000 .9740
G	Width Across Corners (Min.)	.331	.415	.497	.581	.665	.748	.833	1.001	1.170	1.337
H	Head Height	.196 .178	.245 .224	.293 .270	.341 .315	.389 .361	.437 .407	.485 .452	.582 .544	.678 .635	.774 .726
Q	Radius of Head	.625	.781	.938	1.094	1.250	1.406	1.562	1.875	2.188	2.500
E	Diameter of Neck Relief	.185 .170	.240 .225	.294 .279	.345 .330	.400 .385	.454 .439	.507 .492	.620 .605	.731 .716	.838 .823
M	Radius of Neck Relief (Max.)	.032	.036	.041	.046	.050	.054	.059	.065	.072	.081
N	Width of Neck Relief (Min.)	.100	.111	.125	.143	.154	.167	.182	.200	.222	.250
Y	Point Diameter	.132 .118	.172 .156	.212 .194	.252 .232	.291 .270	.332 .309	.371 .347	.450 .425	.530 .502	.609 .579
	MATERIAL	See Notes				FORD PART NUMBERS				CUP POINT	
L	1/4 5/16 3/8 7/16	91350-S 91353-S 91357-S 91362-S	91351-S 91354-S 91358-S 91363-S	91352-S 91355-S 91359-S 91364-S	91356-S 91360-S 91365-S	91361-S 91366-S	91367-S				
	1/2 9/16 5/8 11/16	91368-S 91375-S 91383-S 91392-S	91369-S 91376-S 91384-S 91393-S	91370-S 91377-S 91385-S 91394-S	91371-S 91378-S 91386-S 91395-S	91372-S 91379-S 91387-S 91396-S	91373-S 91380-S 91388-S 91397-S	91374-S 91381-S 91389-S 91398-S	91382-S 91390-S 91399-S	91391-S 91400-S	91401-S
	3/4 13/16 7/8 1	91402-S 91412-S 91422-S 91432-S	91403-S 91413-S 91423-S 91433-S	91404-S 91414-S 91424-S 91434-S	91405-S 91415-S 91425-S 91435-S	91406-S 91416-S 91426-S 91436-S	91407-S 91417-S 91427-S 91437-S	91408-S 91418-S 91428-S 91438-S	91409-S 91419-S 91429-S 91439-S	91410-S 91420-S 91430-S 91440-S	91411-S 91421-S 91431-S 91441-S
	1 1/8 1 1/4 1 3/8 1 1/2	91442-S 91452-S 91462-S 91472-S	91443-S 91453-S 91463-S 91473-S	91444-S 91454-S 91464-S 91474-S	91445-S 91455-S 91465-S 91475-S	91446-S 91456-S 91466-S 91476-S	91447-S 91457-S 91467-S 91477-S	91448-S 91458-S 91468-S 91478-S	91449-S 91459-S 91469-S 91479-S	91450-S 91460-S 91470-S 91480-S	91451-S 91461-S 91471-S 91481-S
	1 5/8 1 3/4 1 7/8 2	91482-S 91492-S 91502-S 91512-S	91483-S 91493-S 91503-S 91513-S	91484-S 91494-S 91504-S 91514-S	91485-S 91495-S 91505-S 91515-S	91486-S 91496-S 91506-S 91516-S	91487-S 91497-S 91507-S 91517-S	91488-S 91498-S 91508-S 91518-S	91489-S 91499-S 91509-S 91519-S	91490-S 91500-S 91510-S 91520-S	91491-S 91501-S 91511-S 91521-S
	2 1/4 2 1/2 2 3/4 3		91522-S	91523-S 91531-S	91524-S 91532-S 91539-S	91525-S 91533-S 91540-S 91546-S	91526-S 91534-S 91541-S 91547-S	91527-S 91535-S 91542-S 91548-S	91528-S 91536-S 91543-S 91549-S	91529-S 91537-S 91544-S 91550-S	91530-S 91538-S 91545-S 91551-S
	3 1/4 3 1/2 3 3/4 4						91552-S	91553-S 91557-S	91554-S 91558-S 91561-S	91555-S 91559-S 91562-S 91564-S	91556-S 91560-S 91563-S 91565-S

MATERIAL: Steel - M-3500-B (unhardened parts). When a case hardened set screw is desired, specify Finish S-18 or S-34, in which case the material shall be SAE 1018 (M-2K2-F) Steel.
THREADS: Threads shall be gaged by virtual gaging methods. Where parts are plated, dimensions apply after plating.
For General Specifications see page C-950.01. For Finishes see Section "Z" Addendum.

FORD MOTOR COMPANY
STANDARD PARTS

SET SCREWS
SQUARE HEAD

CLASS 3A

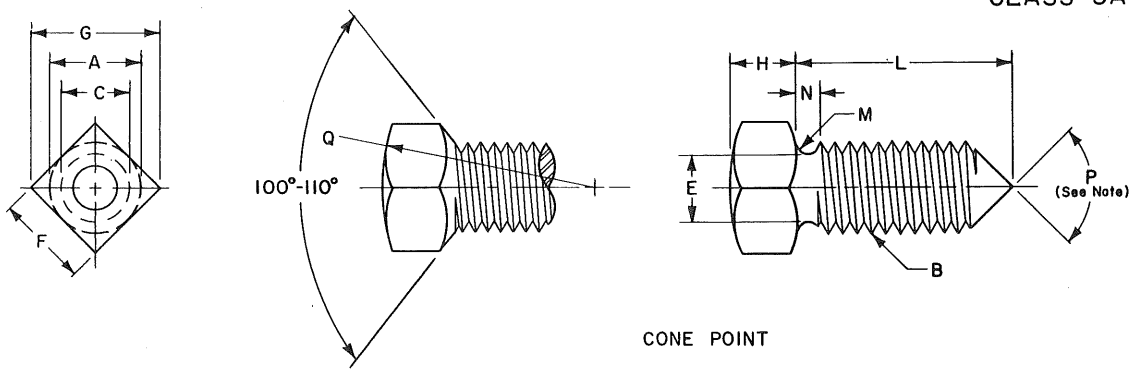

CONE POINT

	Screw Size	1/4	5/16	3/8	7/16	1/2	9/16	5/8	3/4	7/8	1
B	Threads Per Inch	20	18	16	14	13	12	11	10	9	8
A	Major Dia of Thread	.2500 .2419	.3125 .3038	.3750 .3656	.4375 .4272	.5000 .4891	.5625 .5511	.6250 .6129	.7500 .7371	.8750 .8611	1.0000 .9850
	Pitch Dia of Thread	.2175 .2147	.2764 .2734	.3344 .3311	.3911 .3876	.4500 .4463	.5084 .5045	.5660 .5619	.6850 .6806	.8028 .7981	.9188 .9137
C	Minor Dia of Thread (Max.)	.1887	.2443	.2983	.3499	.4056	.4603	.5135	.6273	.7387	.8466
F	Width Across Flats	.2500 .2410	.3125 .3020	.3750 .3620	.4375 .4230	.5000 .4840	.5625 .5450	.6250 .6060	.7500 .7290	.8750 .8520	1.0000 .9740
G	Width Across Corners (Min.)	.331	.415	.497	.581	.665	.748	.833	1.001	1.170	1.337
H	Head Height	.196 .178	.245 .224	.293 .270	.341 .315	.389 .361	.437 .407	.485 .452	.582 .544	.678 .635	.774 .726
Q	Radius of Head	.625	.781	.938	1.094	1.250	1.406	1.562	1.875	2.188	2.500
E	Diameter of Neck Relief (Max.)	.185 .170	.240 .225	.294 .279	.345 .330	.400 .385	.454 .439	.507 .492	.620 .605	.731 .716	.838 .823
M	Radius of Neck Relief (Max.)	.032	.036	.041	.046	.050	.054	.059	.065	.072	.081
N	Width of Neck Relief (Min.)	.100	.111	.125	.143	.154	.167	.182	.200	.222	.250

	MATERIAL	See Notes				FORD PART NUMBERS			CONE POINT		
L	1/2 9/16 5/8 11/16	91575-S 91578-S 91582-S 91587-S	91576-S 91579-S 91583-S 91588-S	91577-S 91580-S 91584-S 91589-S	91581-S 91585-S 91590-S	91586-S 91591-S	91592-S				
	3/4 13/16 7/8 1	91593-S 91600-S 91608-S 91617-S	91594-S 91601-S 91609-S 91618-S	91595-S 91602-S 91610-S 91619-S	91596-S 91603-S 91611-S 91620-S	91597-S 91604-S 91612-S 91621-S	91598-S 91605-S 91613-S 91622-S	91599-S 91606-S 91614-S 91623-S	91607-S 91615-S 91624-S	91616-S 91625-S	91626-S
LENGTH	1 1/8 1 1/4 1 3/8 1 1/2	91627-S 91637-S 91647-S 91657-S	91628-S 91638-S 91648-S 91658-S	91629-S 91639-S 91649-S 91659-S	91630-S 91640-S 91650-S 91660-S	91631-S 91641-S 91651-S 91661-S	91632-S 91642-S 91652-S 91662-S	91633-S 91643-S 91653-S 91663-S	91634-S 91644-S 91654-S 91664-S	91635-S 91645-S 91655-S 91665-S	91636-S 91646-S 91656-S 91666-S
	1 5/8 1 3/4 1 7/8 2	91667-S 91677-S 91687-S 91697-S	91668-S 91678-S 91688-S 91698-S	91669-S 91679-S 91689-S 91699-S	91670-S 91680-S 91690-S 91700-S	91671-S 91681-S 91691-S 91701-S	91672-S 91682-S 91692-S 91702-S	91673-S 91683-S 91693-S 91703-S	91674-S 91684-S 91694-S 91704-S	91675-S 91685-S 91695-S 91705-S	91676-S 91686-S 91696-S 91706-S
	2 1/4 2 1/2 2 3/4 3	91707-S 91717-S 91727-S 91737-S	91708-S 91718-S 91728-S 91738-S	91709-S 91719-S 91729-S 91739-S	91710-S 91720-S 91730-S 91740-S	91711-S 91721-S 91731-S 91741-S	91712-S 91722-S 91732-S 91742-S	91713-S 91723-S 91733-S 91743-S	91714-S 91724-S 91734-S 91744-S	91715-S 91725-S 91735-S 91745-S	91716-S 91726-S 91736-S 91746-S
	3 1/4 3 1/2 3 3/4 4		91747-S	91748-S 91756-S	91749-S 91757-S 91764-S	91750-S 91758-S 91765-S 91771-S	91751-S 91759-S 91766-S 91772-S	91752-S 91760-S 91767-S 91773-S	91753-S 91761-S 91768-S 91774-S	91754-S 91762-S 91769-S 91775-S	91755-S 91763-S 91770-S 91776-S
	4 1/4 4 1/2 4 3/4 5						91777-S	91778-S 91782-S	91779-S 91783-S 91786-S	91780-S 91784-S 91787-S 91789-S	91781-S 91785-S 91788-S 91790-S

MATERIAL: Steel - M-3500-B (unhardened parts). When a case hardened set screw is desired, specify Finish S-18 or S-34, in which case the material shall be SAE 1018 (M-2K2-F) Steel.
THREADS: Threads shall be gaged by virtual gaging methods. Where parts are plated, dimensions apply after plating.
For General Specifications see page C-950.01. For Finishes see Section "Z" Addendum.
POINT ANGLE: When length equals nominal diameter or less, P = 118 ± 2 degrees; when length exceeds nominal diameter, P = 90 ± 2 degrees.

FORD MOTOR COMPANY
STANDARD PARTS

SET SCREWS
SQUARE HEAD

CLASS 3A

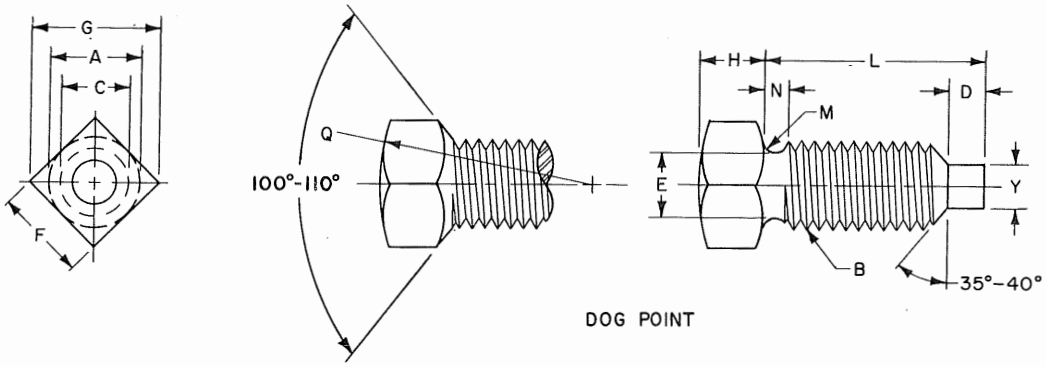

	Screw Size	1/4	5/16	3/8	7/16	1/2	9/16	5/8	3/4	7/8	1
B	Threads Per Inch	20	18	16	14	13	12	11	10	9	8
A	Major Dia of Thread	.2500 .2419	.3125 .3038	.3750 .3656	.4375 .4272	.5000 .4891	.5625 .5511	.6250 .6129	.7500 .7371	.8750 .8611	1.0000 .9850
	Pitch Dia of Thread	.2175 .2147	.2764 .2734	.3344 .3311	.3911 .3876	.4500 .4463	.5084 .5045	.5660 .5619	.6850 .6806	.8028 .7981	.9188 .9137
C	Minor Dia of Thread (Max.)	.1887	.2443	.2983	.3499	.4056	.4603	.5135	.6273	.7387	.8466
F	Width Across Flats	.2500 .2410	.3125 .3020	.3750 .3620	.4375 .4230	.5000 .4840	.5625 .5450	.6250 .6060	.7500 .7290	.8750 .8520	1.0000 .9740
G	Width Across Corners (Min.)	.331	.415	.497	.581	.665	.748	.833	1.001	1.170	1.337
H	Head Height	.196 .178	.245 .224	.293 .270	.341 .315	.389 .361	.437 .407	.485 .452	.582 .544	.678 .635	.774 .726
Q	Radius of Head	.625	.781	.938	1.094	1.250	1.406	1.562	1.875	2.188	2.500
E	Diameter of Neck Relief	.185 .170	.240 .225	.294 .279	.345 .330	.400 .385	.454 .439	.507 .492	.620 .605	.731 .716	.838 .823
M	Radius of Neck Relief (Max.)	.032	.036	.041	.046	.050	.054	.059	.065	.072	.081
N	Width of Neck Relief (Min.)	.100	.111	.125	.143	.154	.167	.182	.200	.222	.250
D	Point Length	.125	.156	.188	.219	.250	.281	.313	.375	.438	.500
Y	Point Diameter	.156 .149	.203 .195	.250 .241	.297 .287	.344 .334	.391 .379	.469 .456	.563 .549	.656 .642	.750 .734

	MATERIAL	See Notes					FORD PART NUMBERS			DOG POINT	
L	1/2 9/16 5/8 11/16	91800-S 91803-S 91807-S 91812-S	91801-S 91804-S 91808-S 91813-S	91802-S 91805-S 91809-S 91814-S	91806-S 91810-S 91815-S	91811-S 91816-S	91817-S				
	3/4 13/16 7/8 1	91818-S 91825-S 91833-S 91842-S	91819-S 91826-S 91834-S 91843-S	91820-S 91827-S 91835-S 91844-S	91821-S 91828-S 91836-S 91845-S	91822-S 91829-S 91837-S 91846-S	91823-S 91830-S 91838-S 91847-S	91824-S 91831-S 91839-S 91848-S	91832-S 91840-S 91849-S	91841-S 91850-S	91851-S
LENGTH	1 1/8 1 1/4 1 3/8 1 1/2	91852-S 91862-S 91872-S 91882-S	91853-S 91863-S 91873-S 91883-S	91854-S 91864-S 91874-S 91884-S	91855-S 91865-S 91875-S 91885-S	91856-S 91866-S 91876-S 91886-S	91857-S 91867-S 91877-S 91887-S	91858-S 91868-S 91878-S 91888-S	91859-S 91869-S 91879-S 91889-S	91860-S 91870-S 91880-S 91890-S	91861-S 91871-S 91881-S 91891-S
	1 5/8 1 3/4 1 7/8 2	91892-S 91902-S 91912-S 91922-S	91893-S 91903-S 91913-S 91923-S	91894-S 91904-S 91914-S 91924-S	91895-S 91905-S 91915-S 91925-S	91896-S 91906-S 91916-S 91926-S	91897-S 91907-S 91917-S 91927-S	91898-S 91908-S 91918-S 91928-S	91899-S 91909-S 91919-S 91929-S	91900-S 91910-S 91920-S 91930-S	91901-S 91911-S 91921-S 91931-S
	2 1/4 2 1/2 2 3/4 3	91932-S 91942-S 91952-S 91962-S	91933-S 91943-S 91953-S 91963-S	91934-S 91944-S 91954-S 91964-S	91935-S 91945-S 91955-S 91965-S	91936-S 91946-S 91956-S 91966-S	91937-S 91947-S 91957-S 91967-S	91938-S 91948-S 91958-S 91968-S	91939-S 91949-S 91959-S 91969-S	91940-S 91950-S 91960-S 91970-S	91941-S 91951-S 91961-S 91971-S
	3 1/4 3 1/2 3 3/4 4		91972-S	91973-S 91981-S	91974-S 91982-S 91989-S	91975-S 91983-S 91990-S 91996-S	91976-S 91984-S 91991-S 91997-S	91977-S 91985-S 91992-S 91998-S	91978-S 91986-S 91993-S 91999-S	91979-S 91987-S 91994-S 92000-S	91980-S 91988-S 91995-S 92001-S
	4 1/4 4 1/2 4 3/4 5						92002-S	92003-S 92007-S	92004-S 92008-S 92011-S	92005-S 92009-S 92012-S 92014-S	92006-S 92010-S 92013-S 92015-S

MATERIAL: Steel - M-3500-B (unhardened parts). When a case hardened set screw is desired, specify Finish S-18 or S-34, in which case the material shall be SAE 1018 (M-2K2-F) Steel.
THREADS: Threads shall be gaged by virtual gaging methods. Where parts are plated, dimensions apply after plating.
For General Specifications see page C-950.01. For Finishes see Section "Z" Addendum.

FORD MOTOR COMPANY
STANDARD PARTS

SET SCREWS
HEADLESS

SLOTTED
CLASS 3A

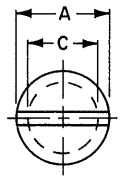

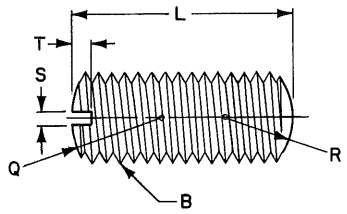

OVAL (ROUND) POINT

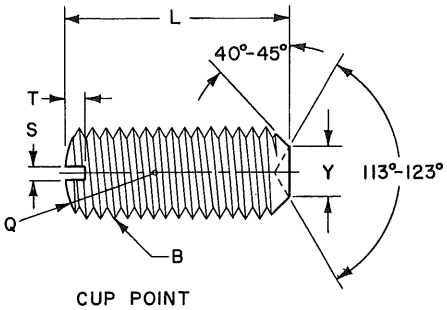

CUP POINT

	Screw Size	8		10		12		1/4		5/16	
B	Threads Per Inch	32	36	24	32	24	28	20	28	18	24
A	Major Dia of Thread	.1640 .1580	.1640 .1585	.1900 .1828	.1900 .1840	.2160 .2088	.2160 .2095	.2500 .2419	.2500 .2435	.3125 .3038	.3125 .3053
	Pitch Dia of Thread	.1437 .1415	.1460 .1439	.1629 .1604	.1697 .1674	.1889 .1863	.1928 .1904	.2175 .2147	.2268 .2243	.2764 .2734	.2854 .2827
C	Minor Dia of Thread (Max.)	.1257	.1299	.1389	.1517	.1649	.1722	.1887	.2062	.2443	.2614
Q	Radius (Slotted end) (Nom.)	.164	.164	.190	.190	.216	.216	.250	.250	.313	.313
S	Slot Width (Nom.)	.029	.029	.032	.032	.036	.036	.045	.045	.051	.051
T	Slot Depth (Nom.)	.041	.041	.048	.048	.054	.054	.063	.063	.078	.078
R	Radius (Oval Point)	.125	.125	.141	.141	.156	.156	.188	.188	.234	.234
Y	Point Diameter (Cup Point)	.087 .076	.087 .076	.102 .088	.102 .088	.115 .101	.115 .101	.132 .118	.132 .118	.172 .156	.172 .156
	MATERIAL	See Notes				FORD PART NUMBERS			OVAL (ROUND) POINT		
L	1/4 5/16 3/8 7/16	89400-S 89410-S 89420-S 89430-S	89401-S 89411-S 89421-S 89431-S	89402-S 89412-S 89422-S 89432-S	89403-S 89413-S 89423-S 89433-S	89404-S 89414-S 89424-S 89434-S	89405-S 89415-S 89425-S 89435-S	89406-S 89416-S 89426-S 89436-S	89407-S 89417-S 89427-S 89437-S	89408-S 89418-S 89428-S 89438-S	89409-S 89419-S 89429-S 89439-S
LENGTH	1/2 9/16 5/8 11/16	89440-S 89450-S 89460-S 89470-S	89441-S 89451-S 89461-S 89471-S	89442-S 89452-S 89462-S 89472-S	89443-S 89453-S 89463-S 89473-S	89444-S 89454-S 89464-S 89474-S	89445-S 89455-S 89465-S 89475-S	89446-S 89456-S 89466-S 89476-S	89447-S 89457-S 89467-S 89477-S	89448-S 89458-S 89468-S 89478-S	89449-S 89459-S 89469-S 89479-S
	3/4 13/16 7/8 1	89480-S 89490-S 89500-S 89510-S	89481-S 89491-S 89501-S 89511-S	89482-S 89492-S 89502-S 89512-S	89483-S 89493-S 89503-S 89513-S	89484-S 89494-S 89504-S 89514-S	89485-S 89495-S 89505-S 89515-S	89486-S 89496-S 89506-S 89516-S	89487-S 89497-S 89507-S 89517-S	89488-S 89498-S 89508-S 89518-S	89489-S 89499-S 89509-S 89519-S
	1 1/8 1 1/4 1 3/8 1 1/2			89520-S 89528-S	89521-S 89529-S	89522-S 89530-S 89536-S 89542-S	89523-S 89531-S 89537-S 89543-S	89524-S 89532-S 89538-S 89544-S	89525-S 89533-S 89539-S 89545-S	89526-S 89534-S 89540-S 89546-S	89527-S 89535-S 89541-S 89547-S
	1 5/8 1 3/4 1 7/8 2							89548-S 89552-S	89549-S 89553-S	89550-S 89554-S 89556-S 89558-S	89551-S 89555-S 89557-S 89559-S
	MATERIAL	See Notes				FORD PART NUMBERS			CUP POINT		
L	1/4 5/16 3/8 7/16	89565-S 89575-S 89585-S 89595-S	89566-S 89576-S 89586-S 89596-S	89567-S 89577-S 89587-S 89597-S	89568-S 89578-S 89588-S 89598-S	89569-S 89579-S 89589-S 89599-S	89570-S 89580-S 89590-S 89600-S	89571-S 89581-S 89591-S 89601-S	89572-S 89582-S 89592-S 89602-S	89573-S 89583-S 89593-S 89603-S	89574-S 89584-S 89594-S 89604-S
LENGTH	1/2 9/16 5/8 11/16	89605-S 89615-S 89625-S 89635-S	89606-S 89616-S 89626-S 89636-S	89607-S 89617-S 89627-S 89637-S	89608-S 89618-S 89628-S 89638-S	89609-S 89619-S 89629-S 89639-S	89610-S 89620-S 89630-S 89640-S	89611-S 89621-S 89631-S 89641-S	89612-S 89622-S 89632-S 89642-S	89613-S 89623-S 89633-S 89643-S	89614-S 89624-S 89634-S 89644-S
	3/4 13/16 7/8 1	89645-S 89655-S 89665-S 89675-S	89646-S 89656-S 89666-S 89676-S	89647-S 89657-S 89667-S 89677-S	89648-S 89658-S 89668-S 89678-S	89649-S 89659-S 89669-S 89679-S	89650-S 89660-S 89670-S 89680-S	89651-S 89661-S 89671-S 89681-S	89652-S 89662-S 89672-S 89682-S	89653-S 89663-S 89673-S 89683-S	89654-S 89664-S 89674-S 89684-S
	1 1/8 1 1/4 1 3/8 1 1/2			89685-S 89693-S	89686-S 89694-S	89687-S 89695-S 89701-S 89707-S	89688-S 89696-S 89702-S 89708-S	89689-S 89697-S 89703-S 89709-S	89690-S 89698-S 89704-S 89710-S	89691-S 89699-S 89705-S 89711-S	89692-S 89700-S 89706-S 89712-S
	1 5/8 1 3/4 1 7/8 2							89713-S 89717-S	89714-S 89718-S	89715-S 89719-S 89721-S 89723-S	89716-S 89720-S 89722-S 89724-S

NOTES: For General Specifications see Page C-950.01. For Finishes see Section "Z" Addendum.
MATERIAL: Steel - M-3500-A or equivalent free cutting steel (Unhardened product). Specify finish S18 or S34 when a case hardened set screw is desired, in which case the material shall be SAE 1018 (M-2K2-F).
THREADS: Threads shall be gaged by virtual gaging method. Where parts are plated, dimensions apply after plating.

FORD MOTOR COMPANY
STANDARD PARTS

SET SCREWS
HEADLESS

SLOTTED
CLASS 3A

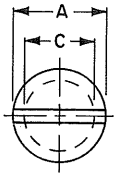

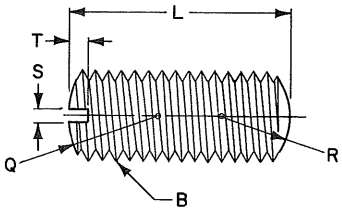

OVAL (ROUND) POINT

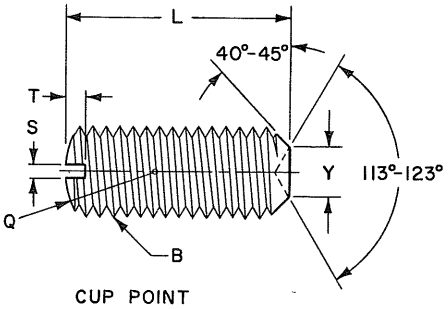

CUP POINT

	Screw Size	3/8		7/16		1/2		9/16	
B	Threads Per Inch	16	24	14	20	13	20	12	18
A	Major Dia of Thread	.3750 .3656	.3750 .3678	.4375 .4272	.4375 .4294	.5000 .4891	.5000 .4919	.5625 .5511	.5625 .5538
	Pitch Dia of Thread	.3344 .3311	.3479 .3450	.3911 .3876	.4050 .4019	.4500 .4463	.4675 .4643	.5084 .5045	.5264 .5230
C	Minor Dia of Thread (Max.)	.2983	.3239	.3499	.3762	.4056	.4387	.4603	.4943
Q	Radius (Slotted end) (Nom.)	.375	.375	.438	.438	.500	.500	.563	.563
S	Slot Width (Nom.)	.064	.064	.072	.072	.081	.081	.091	.091
T	Slot Depth (Nom.)	.094	.094	.109	.109	.125	.125	.141	.141
R	Radius (Oval Point)	.281	.281	.328	.328	.375	.375	.422	.422
Y	Point Diameter (Cup Point)	.212 .194	.212 .194	.252 .232	.252 .232	.291 .270	.291 .270	.332 .309	.332 .309
	MATERIAL	See Notes			FORD PART NUMBERS		OVAL (ROUND) POINT		
L	1/4 5/16 3/8 7/16	90060-S 90064-S 90068-S 90074-S	90061-S 90065-S 90069-S 90075-S	90062-S 90066-S 90070-S 90076-S	90063-S 90067-S 90071-S 90077-S	90072-S 90078-S	90073-S 90079-S		
LENGTH	1/2 9/16 5/8 11/16	90080-S 90088-S 90096-S 90104-S	90081-S 90089-S 90097-S 90105-S	90082-S 90090-S 90098-S 90106-S	90083-S 90091-S 90099-S 90107-S	90084-S 90092-S 90100-S 90108-S	90085-S 90093-S 90101-S 90109-S	90086-S 90094-S 90102-S 90110-S	90087-S 90095-S 90103-S 90111-S
	3/4 13/16 7/8 1	90112-S 90120-S 90128-S 90136-S	90113-S 90121-S 90129-S 90137-S	90114-S 90122-S 90130-S 90138-S	90115-S 90123-S 90131-S 90139-S	90116-S 90124-S 90132-S 90140-S	90117-S 90125-S 90133-S 90141-S	90118-S 90126-S 90134-S 90142-S	90119-S 90127-S 90135-S 90143-S
	1 1/8 1 1/4 1 3/8 1 1/2	90144-S 90152-S 90160-S 90168-S	90145-S 90153-S 90161-S 90169-S	90146-S 90154-S 90162-S 90170-S	90147-S 90155-S 90163-S 90171-S	90148-S 90156-S 90164-S 90172-S	90149-S 90157-S 90165-S 90173-S	90150-S 90158-S 90166-S 90174-S	90151-S 90159-S 90167-S 90175-S
	1 5/8 1 3/4 1 7/8 2	90176-S 90184-S 90192-S 90200-S	90177-S 90185-S 90193-S 90201-S	90178-S 90186-S 90194-S 90202-S	90179-S 90187-S 90195-S 90203-S	90180-S 90188-S 90196-S 90204-S	90181-S 90189-S 90197-S 90205-S	90182-S 90190-S 90198-S 90206-S	90183-S 90191-S 90199-S 90207-S
	MATERIAL	See Notes			FORD PART NUMBERS		CUP POINT		
L	1/4 5/16 3/8 7/16	90215-S 90219-S 90223-S 90229-S	90216-S 90220-S 90224-S 90230-S	90217-S 90221-S 90225-S 90231-S	90218-S 90222-S 90226-S 90232-S	90227-S 90233-S	90228-S 90234-S		
LENGTH	1/2 9/16 5/8 11/16	90235-S 90243-S 90251-S 90259-S	90236-S 90244-S 90252-S 90260-S	90237-S 90245-S 90253-S 90261-S	90238-S 90246-S 90254-S 90262-S	90239-S 90247-S 90255-S 90263-S	90240-S 90248-S 90256-S 90264-S	90241-S 90249-S 90257-S 90265-S	90242-S 90250-S 90258-S 90266-S
	3/4 13/16 7/8 1	90267-S 90275-S 90283-S 90291-S	90268-S 90276-S 90284-S 90292-S	90269-S 90277-S 90285-S 90293-S	90270-S 90278-S 90286-S 90294-S	90271-S 90279-S 90287-S 90295-S	90272-S 90280-S 90288-S 90296-S	90273-S 90281-S 90289-S 90297-S	90274-S 90282-S 90290-S 90298-S
	1 1/8 1 1/4 1 3/8 1 1/2	90299-S 90307-S 90315-S 90323-S	90300-S 90308-S 90316-S 90324-S	90301-S 90309-S 90317-S 90325-S	90302-S 90310-S 90318-S 90326-S	90303-S 90311-S 90319-S 90327-S	90304-S 90312-S 90320-S 90328-S	90305-S 90313-S 90321-S 90329-S	90306-S 90314-S 90322-S 90330-S
	1 5/8 1 3/4 1 7/8 2	90331-S 90339-S 90347-S 90355-S	90332-S 90340-S 90348-S 90356-S	90333-S 90341-S 90349-S 90357-S	90334-S 90342-S 90350-S 90358-S	90335-S 90343-S 90351-S 90359-S	90336-S 90344-S 90352-S 90360-S	90337-S 90345-S 90353-S 90361-S	90338-S 90346-S 90354-S 90362-S

NOTES: For General Specifications see Page C-950.01. For Finishes see Section "Z" Addendum.
MATERIAL: Steel - M-3500-A or equivalent free cutting steel (Unhardened product). Specify finish S18 or S34 when a case hardened set screw is desired, in which case the material shall be SAE 1018 (M-2K2-F).
THREADS: Threads shall be gaged by virtual gaging method. Where parts are plated, dimensions apply after plating.

FORD MOTOR COMPANY
STANDARD PARTS

SET SCREWS
HEADLESS

SLOTTED
CLASS 3A

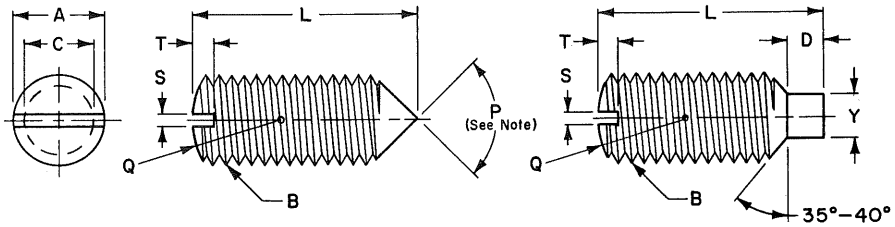

CONE POINT

DOG POINT

	Screw Size	8		10		12		1/4		5/16	
B	Threads Per Inch	32	36	24	32	24	28	20	28	18	24
A	Major Dia of Thread	.1640 .1580	.1640 .1585	.1900 .1828	.1900 .1840	.2160 .2088	.2160 .2095	.2500 .2419	.2500 .2435	.3125 .3038	.3125 .3053
	Pitch Dia of Thread	.1437 .1415	.1460 .1439	.1629 .1604	.1697 .1674	.1889 .1863	.1928 .1904	.2175 .2147	.2268 .2243	.2764 .2734	.2854 .2827
C	Minor Dia of Thread (Max.)	.1257	.1299	.1389	.1517	.1649	.1722	.1887	.2062	.2443	.2614
Q	Radius (Slotted end) (Nom.)	.164	.164	.190	.190	.216	.216	.250	.250	.313	.313
S	Slot Width (Nom.)	.029	.029	.032	.032	.036	.036	.045	.045	.051	.051
T	Slot Depth (Nom.)	.041	.041	.048	.048	.054	.054	.063	.063	.078	.078
D	Point Length (Nom.)	.080	.080	.090	.090	.110	.110	.125	.125	.156	.156
Y	Point Diameter	.109 .103	.109 .103	.127 .120	.127 .120	.144 .137	.144 .137	.156 .149	.156 .149	.203 .195	.203 .195
	MATERIAL	See Notes				FORD PART NUMBERS			CONE POINT		
L	1/4 5/16 3/8 7/16	89730-S 89740-S 89750-S 89760-S	89731-S 89741-S 89751-S 89761-S	89732-S 89742-S 89752-S 89762-S	89733-S 89743-S 89753-S 89763-S	89734-S 89744-S 89754-S 89764-S	89735-S 89745-S 89755-S 89765-S	89736-S 89746-S 89756-S 89766-S	89737-S 89747-S 89757-S 89767-S	89738-S 89748-S 89758-S 89768-S	89739-S 89749-S 89759-S 89769-S
LENGTH	1/2 9/16 5/8 11/16	89770-S 89780-S 89790-S 89800-S	89771-S 89781-S 89791-S 89801-S	89772-S 89782-S 89792-S 89802-S	89773-S 89783-S 89793-S 89803-S	89774-S 89784-S 89794-S 89804-S	89775-S 89785-S 89795-S 89805-S	89776-S 89786-S 89796-S 89806-S	89777-S 89787-S 89797-S 89807-S	89778-S 89788-S 89798-S 89808-S	89779-S 89789-S 89799-S 89809-S
	3/4 13/16 7/8 1	89810-S 89820-S 89830-S 89840-S	89811-S 89821-S 89831-S 89841-S	89812-S 89822-S 89832-S 89842-S	89813-S 89823-S 89833-S 89843-S	89814-S 89824-S 89834-S 89844-S	89815-S 89825-S 89835-S 89845-S	89816-S 89826-S 89836-S 89846-S	89817-S 89827-S 89837-S 89847-S	89818-S 89828-S 89838-S 89848-S	89819-S 89829-S 89839-S 89849-S
	1 1/8 1 1/4 1 3/8 1 1/2			89850-S 89858-S	89851-S 89859-S	89852-S 89860-S 89866-S 89872-S	89853-S 89861-S 89867-S 89873-S	89854-S 89862-S 89868-S 89874-S	89855-S 89863-S 89869-S 89875-S	89856-S 89864-S 89870-S 89876-S	89857-S 89865-S 89871-S 89877-S
	1 5/8 1 3/4 1 7/8 2							89878-S 89882-S	89879-S 89883-S	89880-S 89884-S 89886-S 89888-S	89881-S 89885-S 89887-S 89889-S
	MATERIAL	See Notes				FORD PART NUMBERS			DOG POINT		
L	1/4 5/16 3/8 7/16	89895-S 89905-S 89915-S 89925-S	89896-S 89906-S 89916-S 89926-S	89897-S 89907-S 89917-S 89927-S	89898-S 89908-S 89918-S 89928-S	89899-S 89909-S 89919-S 89929-S	89900-S 89910-S 89920-S 89930-S	89901-S 89911-S 89921-S 89931-S	89902-S 89912-S 89922-S 89932-S	89903-S 89913-S 89923-S 89933-S	89904-S 89914-S 89924-S 89934-S
LENGTH	1/2 9/16 5/8 11/16	89935-S 89945-S 89955-S 89965-S	89936-S 89946-S 89956-S 89966-S	89937-S 89947-S 89957-S 89967-S	89938-S 89948-S 89958-S 89968-S	89939-S 89949-S 89959-S 89969-S	89940-S 89950-S 89960-S 89970-S	89941-S 89951-S 89961-S 89971-S	89942-S 89952-S 89962-S 89972-S	89943-S 89953-S 89963-S 89973-S	89944-S 89954-S 89964-S 89974-S
	3/4 13/16 7/8 1	89975-S 89985-S 89995-S 90005-S	89976-S 89986-S 89996-S 90006-S	89977-S 89987-S 89997-S 90007-S	89978-S 89988-S 89998-S 90008-S	89979-S 89989-S 89999-S 90009-S	89980-S 89990-S 90000-S 90010-S	89981-S 89991-S 90001-S 90011-S	89982-S 89992-S 90002-S 90012-S	89983-S 89993-S 90003-S 90013-S	89984-S 89994-S 90004-S 90014-S
	1 1/8 1 1/4 1 3/8 1 1/2			90015-S 90023-S	90016-S 90024-S	90017-S 90025-S 90031-S 90037-S	90018-S 90026-S 90032-S 90038-S	90019-S 90027-S 90033-S 90039-S	90020-S 90028-S 90034-S 90040-S	90021-S 90029-S 90035-S 90041-S	90022-S 90030-S 90036-S 90042-S
	1 5/8 1 3/4 1 7/8 2							90043-S 90047-S	90044-S 90048-S	90045-S 90049-S 90051-S 90053-S	90046-S 90050-S 90052-S 90054-S

NOTES: For General Specifications see Page C-950.01. For Finishes see Section "Z" Addendum.
MATERIAL: Steel - M-3500-A or equivalent free cutting steel (Unhardened product). Specify finish S18 or S34 when a case hardened set screw is desired, in which case the material shall be SAE 1018 (M-2K2-F).
POINT ANGLE: When length equals nominal diameter or less, P = 118 ± 2 degrees; when length exceeds nominal diameter, P = 90 ± 2 degrees.
THREADS: Threads shall be gaged by virtual gaging method. Where parts are plated, dimensions apply after plating.

FORD MOTOR COMPANY
STANDARD PARTS

SET SCREW
HEADLESS

SLOTTED
CLASS 3A

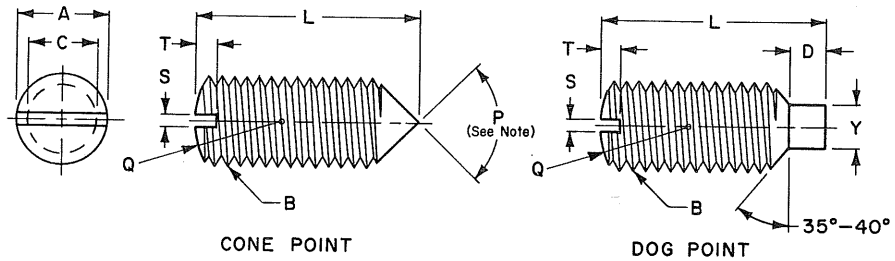

CONE POINT DOG POINT

	Screw Size	3/8		7/16		1/2		9/16	
B	Threads Per Inch	16	24	14	20	13	20	12	18
A	Major Dia of Thread	.3750 .3656	.3750 .3678	.4375 .4272	.4375 .4294	.5000 .4891	.5000 .4919	.5625 .5511	.5625 .5538
	Pitch Dia of Thread	.3344 .3311	.3479 .3450	.3911 .3876	.4050 .4019	.4500 .4463	.4675 .4643	.5084 .5045	.5264 .5230
C	Minor Dia of Thread (Max.)	.2983	.3239	.3499	.3762	.4056	.4387	.4603	.4943
Q	Radius (Slotted end)(Nom.)	.375	.375	.438	.438	.500	.500	.563	.563
S	Slot Width (Nom.)	.064	.064	.072	.072	.081	.081	.091	.091
T	Slot Depth (Nom.)	.094	.094	.109	.109	.125	.125	.141	.141
D	Point Length (Nom.)	.188	.188	.219	.219	.250	.250	.281	.281
Y	Point Diameter	.250 .241	.250 .241	.297 .287	.297 .287	.344 .334	.344 .334	.391 .379	.391 .379

MATERIAL — See Notes — FORD PART NUMBERS — CONE POINT

L									
1/4 5/16 3/8 7/16	90370-S 90374-S 90378-S 90384-S	90371-S 90375-S 90379-S 90385-S	90372-S 90376-S 90380-S 90386-S	90373-S 90377-S 90381-S 90387-S	90382-S 90388-S	90383-S 90389-S		
1/2 9/16 5/8 11/16	90390-S 90398-S 90406-S 90414-S	90391-S 90399-S 90407-S 90415-S	90392-S 90400-S 90408-S 90416-S	90393-S 90401-S 90409-S 90417-S	90394-S 90402-S 90410-S 90418-S	90395-S 90403-S 90411-S 90419-S	90396-S 90404-S 90412-S 90420-S	90397-S 90405-S 90413-S 90421-S
3/4 13/16 7/8 1	90422-S 90430-S 90438-S 90446-S	90423-S 90431-S 90439-S 90447-S	90424-S 90432-S 90440-S 90448-S	90425-S 90433-S 90441-S 90449-S	90426-S 90434-S 90442-S 90450-S	90427-S 90435-S 90443-S 90451-S	90428-S 90436-S 90444-S 90452-S	90429-S 90437-S 90445-S 90453-S
1 1/8 1 1/4 1 3/8 1 1/2	90454-S 90462-S 90470-S 90478-S	90455-S 90463-S 90471-S 90479-S	90456-S 90464-S 90472-S 90480-S	90457-S 90465-S 90473-S 90481-S	90458-S 90466-S 90474-S 90482-S	90459-S 90467-S 90475-S 90483-S	90460-S 90468-S 90476-S 90484-S	90461-S 90469-S 90477-S 90485-S
1 5/8 1 3/4 1 7/8 2	90486-S 90494-S 90502-S 90510-S	90487-S 90495-S 90503-S 90511-S	90488-S 90496-S 90504-S 90512-S	90489-S 90497-S 90505-S 90513-S	90490-S 90498-S 90506-S 90514-S	90491-S 90499-S 90507-S 90515-S	90492-S 90500-S 90508-S 90516-S	90493-S 90501-S 90509-S 90517-S

MATERIAL — See Notes — FORD PART NUMBERS — DOG POINT

L								
1/4 5/16 3/8 7/16	90525-S 90529-S 90533-S 90539-S	90526-S 90530-S 90534-S 90540-S	90527-S 90531-S 90535-S 90541-S	90528-S 90532-S 90536-S 90542-S	90537-S 90543-S	90538-S 90544-S		
1/2 9/16 5/8 11/16	90545-S 90553-S 90561-S 90569-S	90546-S 90554-S 90562-S 90570-S	90547-S 90555-S 90563-S 90571-S	90548-S 90556-S 90564-S 90572-S	90549-S 90557-S 90565-S 90573-S	90550-S 90558-S 90566-S 90574-S	90551-S 90559-S 90567-S 90575-S	90552-S 90560-S 90568-S 90576-S
3/4 13/16 7/8 1	90577-S 90585-S 90593-S 90601-S	90578-S 90586-S 90594-S 90602-S	90579-S 90587-S 90595-S 90603-S	90580-S 90588-S 90596-S 90604-S	90581-S 90589-S 90597-S 90605-S	90582-S 90590-S 90598-S 90606-S	90583-S 90591-S 90599-S 90607-S	90584-S 90592-S 90600-S 90608-S
1 1/8 1 1/4 1 3/8 1 1/2	90609-S 90617-S 90625-S 90633-S	90610-S 90618-S 90626-S 90634-S	90611-S 90619-S 90627-S 90635-S	90612-S 90620-S 90628-S 90636-S	90613-S 90621-S 90629-S 90637-S	90614-S 90622-S 90630-S 90638-S	90615-S 90623-S 90631-S 90639-S	90616-S 90624-S 90632-S 90640-S
1 5/8 1 3/4 1 7/8 2	90641-S 90649-S 90657-S 90665-S	90642-S 90650-S 90658-S 90666-S	90643-S 90651-S 90659-S 90667-S	90644-S 90652-S 90660-S 90668-S	90645-S 90653-S 90661-S 90669-S	90646-S 90654-S 90662-S 90670-S	90647-S 90655-S 90663-S 90671-S	90648-S 90656-S 90664-S 90672-S

NOTES: For General Specifications see Page C-950.01. For Finishes see Section "Z" Addendum.
MATERIAL: Steel - M-3500-A or equivalent free cutting steel (Unhardened product). Specify finish S18 or S34 when a case hardened set screw is desired, in which case the material shall be SAE 1018 (M-2K2-F).
POINT ANGLE: When length equals nominal diameter or less, P = 118 ± 2 degrees; when length exceeds nominal diameter, P = 90 ± 2 degrees.
THREADS: Threads shall be gaged by virtual gaging method. Where parts are plated, dimensions apply after plating.

FORD MOTOR COMPANY
STANDARD PARTS

SET SCREWS
HEADLESS

HEXAGON SOCKET
CLASS 3A

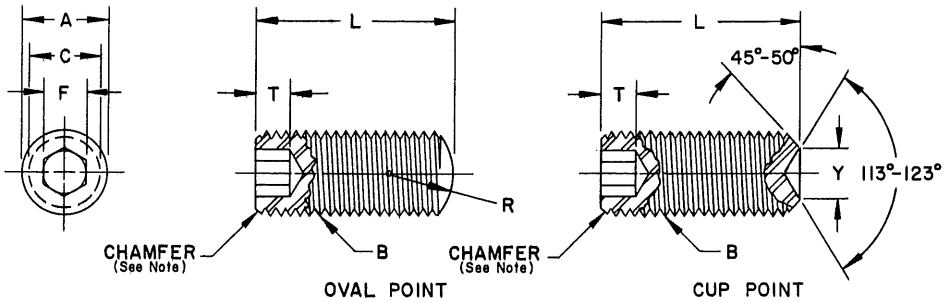

	Screw Size	12		1/4		5/16		3/8		7/16	
B	Threads Per Inch	24	28	20	28	18	24	16	24	14	20
A	Major Dia of Thread	.2160 .2088	.2160 .2095	.2500 .2419	.2500 .2435	.3125 .3038	.3125 .3053	.3750 .3656	.3750 .3678	.4375 .4272	.4375 .4294
	Pitch Dia of Thread	.1889 .1863	.1928 .1904	.2175 .2147	.2268 .2243	.2764 .2734	.2854 .2827	.3344 .3311	.3479 .3450	.3911 .3876	.4050 .4019
C	Minor Dia of Thread (Max.)	.1649	.1722	.1887	.2062	.2443	.2614	.2983	.3239	.3499	.3762
F	Socket Width (Across Flats)	.0947 .0938	.0947 .0938	.1270 .1250	.1270 .1205	.1582 .1562	.1582 .1562	.1895 .1875	.1895 .1875	.2207 .2188	.2207 .2188
T	Socket Depth (Min.)	.075	.075	.100	.100	.125	.125	.150	.150	.175	.175
R	Radius (Oval Point)	.156	.156	.188	.188	.234	.234	.281	.281	.328	.328
Y	Point Diameter (Cup Point)	.115 .101	.115 .101	.132 .118	.132 .118	.172 .156	.172 .156	.212 .194	.212 .194	.252 .232	.252 .232
	MATERIAL	See Notes				FORD PART NUMBERS		OVAL POINT			
L	1/4 5/16 3/8 7/16	301545-S 301546-S 301547-S 301548-S	301549-S 301550-S 301551-S 301552-S	301553-S 301554-S 301555-S 331556-S	301557-S 301558-S 301559-S 301560-S	301561-S 301562-S 301563-S 301564-S	301565-S 301566-S 301567-S 301568-S	301569-S 301570-S 301571-S 301572-S	301573-S 301574-S 301575-S 301576-S	301577-S 301578-S 301579-S 301580-S	301581-S 301582-S 301583-S 301584-S
L	1/2 9/16 5/8 3/4	301585-S 301586-S 301587-S 301588-S	301589-S 301590-S 301591-S 301592-S	301593-S 301594-S 301595-S 301596-S	301597-S 301598-S 301599-S 301600-S	301601-S 301602-S 301603-S 301604-S	301605-S 301606-S 301607-S 301608-S	301609-S 301610-S 301611-S 301612-S	301613-S 301614-S 301615-S 301616-S	301617-S 301618-S 301619-S 301620-S	301621-S 301622-S 301623-S 301624-S
L	7/8 1 1 1/4 1 1/2	301625-S 301626-S 301627-S 301628-S	301629-S 301630-S 301631-S 301632-S	301633-S 301534-S 301635-S 301636-S	301637-S 301638-S 301639-S 301640-S	301641-S 301642-S 301643-S 301644-S	301645-S 301646-S 301647-S 301648-S	301649-S 301650-S 301651-S 301652-S	301653-S 301654-S 301655-S 301656-S	301657-S 301658-S 301659-S 301660-S	301661-S 301662-S 301663-S 301664-S
L	1 3/4 2 2 1/4 2 1/2							301665-S 301666-S 301667-S 301668-S	301660-S 301670-S 301671-S 301672-S	301673-S 301674-S 301675-S 301676-S	301677-S 301678-S 301679-S 301680-S
	MATERIAL	See Notes				FORD PART NUMBERS		CUP POINT			
L	1/4 5/16 3/8 7/16	301410-S 301411-S 301412-S 301413-S	301414-S 301415-S 301416-S 301417-S	300353-S 301419-S 301420-S 301421-S	301422-S 301423-S 301424-S 301425-S	301426-S 301384-S 300140-S 301428-S	301429-S 301430-S 301431-S 301432-S	300460-S 300263-S 300138-S 301436-S	301437-S 301438-S 301439-S 301440-S	301441-S 301442-S 301443-S 301444-S	301445-S 301446-S 301447-S 301448-S
L	1/2 9/16 5/8 3/4	301449-S 301450-S 301451-S 301452-S	301453-S 301454-S 301455-S 301456-S	301457-S 301458-S 301459-S 301460-S	301461-S 301462-S 301463-S 301464-S	300141-S 301466-S 301467-S 301468-S	301469-S 301470-S 301471-S 301472-S	300005-S 301474-S 301475-S 301476-S	301477-S 301478-S 301479-S 301480-S	301481-S 301482-S 301483-S 301484-S	301485-S 301486-S 301487-S 301488-S
L	7/8 1 1 1/4 1 1/2	301489-S 301490-S 301491-S 301492-S	301493-S 301494-S 301495-S 301496-S	301497-S 301498-S 301499-S 301500-S	301501-S 301502-S 301503-S 301504-S	301505-S 301506-S 301507-S 301508-S	301509-S 301510-S 301511-S 301512-S	301513-S 301514-S 301515-S 301516-S	301517-S 301518-S 301519-S 301520-S	301521-S 301522-S 301523-S 301524-S	301525-S 301526-S 301527-S 301528-S
L	1 3/4 2 2 1/4 2 1/2							301529-S 301530-S 301531-S 301532-S	301533-S 301534-S 301535-S 301536-S	301537-S 301538-S 301539-S 301540-S	301541-S 301542-S 301543-S 301544-S

NOTES: For General Specifications see Page C-950.01. For Finishes see Section "Z" Addendum.
MATERIAL: Steel - Medium Carbon Alloy, hardened by quenching in oil from the hardening temperature, and tempered to a Rockwell "C" hardness of 45-53.
SOCKET DEPTH: Tabular dimensions apply to cup point screws one diameter in length or longer. For screws shorter than one diameter in length, and for all oval point screws, the socket shall be as deep as practicable.
SOCKET END CHAMFER: See General Specifications.

FORD MOTOR COMPANY
STANDARD PARTS

SET SCREWS
HEADLESS

HEXAGON SOCKET
CLASS 3A

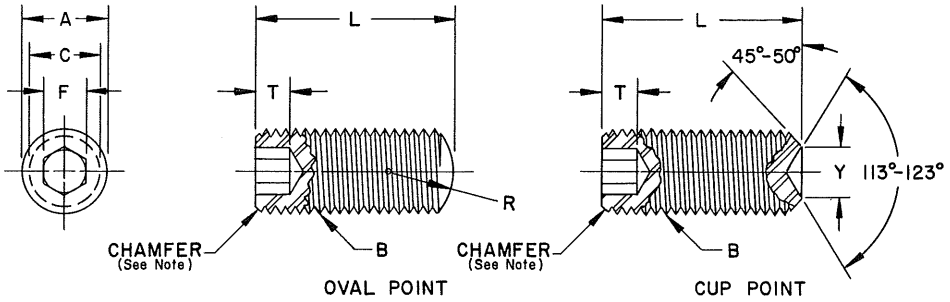

	Screw Size	1/2		9/16		5/8		3/4		7/8	
B	Threads Per Inch	13	20	12	18	11	18	10	16	9	14
A	Major Dia of Thread	.5000 .4891	.5000 .4919	.5625 .5511	.5625 .5538	.6250 .6129	.6250 .6163	.7500 .7371	.7500 .7406	.8750 .8611	.8750 .8647
	Pitch Dia of Thread	.4500 .4463	.4675 .4643	.5084 .5045	.5264 .5230	.5660 .5619	.5889 .5854	.6850 .6806	.7094 .7056	.8028 .7981	.8286 .8245
C	Minor Dia of Thread (Max.)	.4056	.4387	.4603	.4943	.5135	.5568	.6273	.6733	.7387	.7874
F	Socket Width (Across Flats)	.2520 .2500	.2520 .2500	.2520 .2500	.2520 .2500	.3155 .3125	.3155 .3125	.3780 .3750	.3780 .3750	.5030 .5000	.5030 .5000
T	Socket Depth (Min.)	.200	.200	.200	.200	.250	.250	.300	.300	.400	.400
R	Radius (Oval Point)	.375	.375	.422	.422	.469	.469	.562	.562	.656	.656
Y	Point Diameter (Cup Point)	.291 .270	.291 .270	.332 .309	.332 .309	.371 .347	.371 .347	.450 .425	.450 .425	.530 .502	.530 .502

MATERIAL	See Notes				FORD PART NUMBERS				OVAL POINT	
LENGTH	1/4 5/16 3/8 7/16	301928-S 301929-S 301930-S 301931-S	301932-S 301933-S 301934-S 301935-S							
	1/2 9/16 5/8 3/4	301936-S 301937-S 301938-S 301939-S	301940-S 301941-S 301942-S 301943-S	301944-S 301945-S 301946-S 301947-S	301948-S 301949-S 301950-S 301951-S	301952-S 301953-S 391954-S 301955-S	301956-S 301957-S 301958-S 301959-S				
	7/8 1 1 1/4 1 1/2	301960-S 301961-S 301962-S 301963-S	301964-S 301965-S 301966-S 301967-S	301968-S 301969-S 301970-S 301971-S	301972-S 301973-S 301974-S 301975-S	301976-S 301977-S 301978-S 301979-S	301980-S 301981-S 301982-S 301983-S	301984-S 301985-S 301986-S 301987-S	301988-S 301989-S 301990-S 301991-S	301992-S 301993-S 301994-S 301995-S	301996-S 301997-S 301998-S 301999-S
	1 3/4 2 2 1/4 2 1/2	302000-S 302001-S 302002-S 302003-S	302004-S 302005-S 302006-S 302007-S	302008-S 302009-S 302010-S 302011-S	302012-S 302013-S 302014-S 302015-S	302016-S 302017-S 302018-S 302019-S	302020-S 302021-S 302022-S 302023-S	302024-S 302025-S 302026-S 302027-S	302028-S 302029-S 302030-S 302031-S	302032-S 302033-S 302034-S 302035-S	302036-S 302037-S 302038-S 302039-S

MATERIAL	See Notes				FORD PART NUMBERS				CUP POINT	
LENGTH	1/4 5/16 3/8 7/16	301817-S 301818-S 301819-S 301820-S	301821-S 301822-S 301823-S 301824-S							
	1/2 9/16 5/8 3/4	300142-S 301826-S 301827-S 301828-S	301829-S 301830-S 301831-S 301832-S	301833-S 301834-S 301835-S 301836-S	301837-S 301838-S 301839-S 301840-S	301841-S 301842-S 301843-S 300371-S	301844-S 301845-S 301846-S 301847-S				
	7/8 1 1 1/4 1 1/2	301848-S 301849-S 301850-S 301851-S	301852-S 301853-S 301854-S 301855-S	301856-S 301857-S 301858-S 301859-S	301860-S 301861-S 301862-S 301863-S	301864-S 301865-S 301866-S 301867-S	301868-S 301869-S 301870-S 301871-S	301872-S 301873-S 301874-S 301875-S	301876-S 301877-S 301878-S 301879-S	301880-S 301881-S 301882-S 301883-S	301884-S 301885-S 301886-S 301887-S
	1 3/4 2 2 1/4 2 1/2	301888-S 301889-S 301890-S 301891-S	301892-S 301893-S 391894-S 301895-S	301896-S 301897-S 301898-S 301899-S	301900-S 301901-S 301902-S 301903-S	301904-S 301905-S 301906-S 301907-S	301908-S 301909-S 301910-S 301911-S	301912-S 301913-S 301914-S 301915-S	301916-S 301917-S 301918-S 301919-S	391920-S 301921-S 301922-S 301923-S	391924-S 301925-S 301926-S 301927-S

NOTES: For General Specifications see Page C-950.01. For Finishes see Section "Z" Addendum.
MATERIAL: Steel - Medium Carbon Alloy, hardened by quenching in oil from the hardening temperature, and tempered to a Rockwell "C" hardness of 45-53.
SOCKET DEPTH: Tabular dimensions apply to cup point screws one diameter in length or longer. For screws shorter than one diameter in length, and for all oval point screws, the socket shall be as deep as practicable.
SOCKET END CHAMFER: See General Specifications.

FORD MOTOR COMPANY
STANDARD PARTS

SET SCREWS
HEADLESS

HEXAGON SOCKET
CLASS 3A

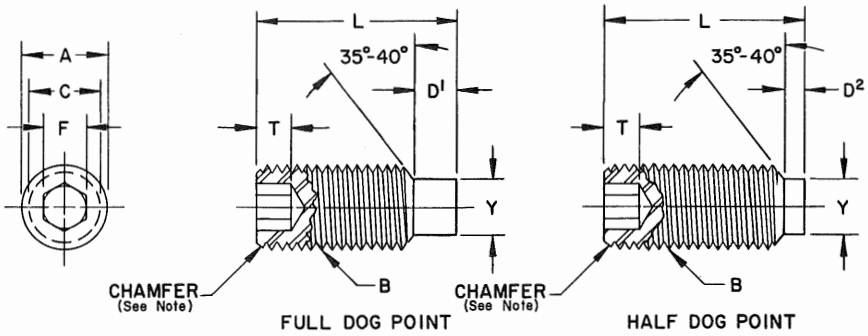

	Screw Size	12		1/4		5/16		3/8		7/16	
B	Threads Per Inch	24	28	20	28	18	24	16	24	14	20
A	Major Dia of Thread	.2160 .2088	.2160 .2095	.2500 .2419	.2500 .2435	.3125 .3038	.3125 .3053	.3750 .3656	.3750 .3678	.4375 .4272	.4375 .4294
	Pitch Dia of Thread	.1889 .1863	.1928 .1904	.2175 .2147	.2268 .2243	.2764 .2734	.2854 .2827	.3344 .3311	.3479 .3450	.3911 .3876	.4050 .4019
C	Minor Dia of Thread (Max.)	.1649	.1722	.1887	.2062	.2443	.2614	.2983	.3239	.3499	.3762
F	Socket Width (Across Flats)	.0947 .0938	.0947 .0938	.1270 .1250	.1270 .2150	.1582 .1562	.1582 .1562	.1895 .1875	.1895 .1875	.2207 .2188	.2207 .2188
T	Socket Depth	DEEP AS PRACTICABLE									
D^1	Point Length (Full Dog)	.11	.11	.12	.12	.16	.16	.19	.19	.22	.22
D^2	Point Length (Half Dog)	.06	.06	.06	.06	.08	.08	.09	.09	.11	.11
Y	Point Diameter	.144 .137	.144 .137	.156 .149	.156 .149	.203 .195	.203 .195	.250 .241	.250 .241	.297 .287	.297 .287
	MATERIAL	See Notes				FORD PART NUMBERS					
L	1/4 5/16 3/8 7/16	301681-S 301682-S 301683-S 301684-S	301685-S 301686-S 301687-S 301688-S	301689-S 301690-S 301691-S 301692-S	301693-S 301694-S 301695-S 301696-S	301697-S 301698-S 301699-S 301700-S	301701-S 301702-S 301703-S 301704-S	301705-S 301706-S 301707-S 301708-S	301709-S 301710-S 301711-S 301712-S	301713-S 301714-S 301715-S 301716-S	301717-S 301718-S 301719-S 301720-S
LENGTH	1/2 9/16 5/8 3/4	301721-S 301722-S 301723-S 301724-S	301725-S 301726-S 301727-S 301728-S	301729-S 301730-S 301731-S 301732-S	301733-S 301734-S 301735-S 301736-S	301737-S 301738-S 301739-S 301740-S	301741-S 301742-S 301743-S 301744-S	301745-S 301746-S 301747-S 301748-S	301749-S 301750-S 301751-S 301752-S	301753-S 301754-S 301755-S 301756-S	301757-S 301758-S 301759-S 301760-S
	7/8 1 1 1/4 1 1/2	301761-S 301762-S 301763-S 301764-S	301765-S 301766-S 301767-S 301768-S	301769-S 301770-S 301771-S 301772-S	301773-S 301774-S 301775-S 301776-S	301777-S 301778-S 301779-S 301780-S	301781-S 301782-S 301783-S 301784-S	301785-S 301786-S 301787-S 301788-S	301789-S 301790-S 301791-S 301792-S	301793-S 301794-S 301795-S 301796-S	301797-S 301798-S 301799-S 301800-S
	1 3/4 2 2 1/4 2 1/2							301801-S 301802-S 301803-S 301804-S	301805-S 301806-S 301807-S 301808-S	301809-S 301810-S 301811-S 301812-S	301813-S 301814-S 301815-S 301816-S

NOTES: For General Specifications see Page C-950.01. For Finishes see Section "Z" Addendum.
MATERIAL: Steel - Medium Carbon Alloy, hardened by quenching in oil from the hardening temperature, and tempered to a Rockwell "C" hardness of 45-53.
SOCKET END CHAMFER: See General Specifications.
D^1 shows dimensions for screws having Full Dog Points only. (Part Numbers shown below double lines).
D^2 shows dimensions for screws having Half Dog Points only. (Part Numbers shown above double lines).

FORD MOTOR COMPANY
STANDARD PARTS

SET SCREWS
HEADLESS

HEXAGON SOCKET
CLASS 3A

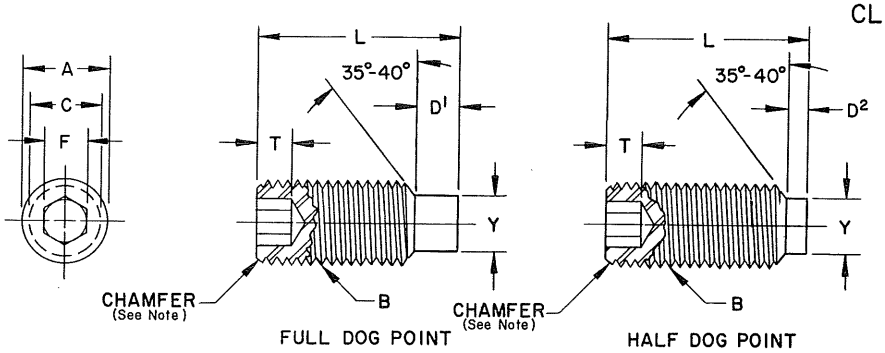

	Screw Size	1/2		9/16		5/8		3/4		7/8	
B	Threads Per Inch	13	20	12	18	11	18	10	16	9	14
A	Major Dia of Thread	.5000 .4891	.5000 .4919	.5625 .5511	.5625 .5538	.6250 .6129	.6250 .6163	.7500 .7371	.7500 .7406	.8750 .8611	.8750 .8647
	Pitch Dia of Thread	.4500 .4463	.4675 .4643	.5084 .5045	.5264 .5230	.5660 .5619	.5889 .5854	.6850 .6806	.7094 .7056	.8028 .7981	.8286 .8245
C	Minor Dia of Thread (Max.)	.4056	.4387	.4603	.4943	.5135	.5568	.6273	.6733	.7387	.7874
F	Socket Width (Across Flats)	.2520 .2500	.2520 .2500	.2520 .2500	.2520 .2500	.3155 .3125	.3155 .3125	.3780 .3750	.3780 .3750	.5030 .5000	.5030 .5000
T	Socket Depth	DEEP AS PRACTICABLE									
D^1	Point Length (Full Dog)	.25	.25	.28	.28	.31	.31	.38	.38	.44	.44
D^2	Point Length (Half Dog)	.12	.12	.14	.14	.16	.16	.19	.19	.22	.22
Y	Point Diameter	.344 .334	.344 .334	.391 .379	.391 .379	.469 .456	.469 .456	.562 .549	.562 .549	.656 .642	.656 .642
	MATERIAL	See Notes				FORD PART NUMBERS					
L	1/4 5/16 3/8 7/16	302040-S 302041-S 302042-S 302043-S	302044-S 302045-S 302046-S 302047-S								
L	1/2 9/16 5/8	302048-S 302049-S 302050-S	302052-S 302053-S 302054-S	302056-S 302057-S 302058-S	302060-S 302061-S 302062-S	302064-S 302065-S 302066-S	302068-S 302069-S 302070-S				
E	3/4	302051-S	302055-S	302059-S	302063-S	302067-S	302071-S				
N	7/8	302072-S	302076-S	302080-S	302084-S	302088-S	302092-S	302096-S	302100-S	302104-S	302108-S
G	1	302073-S	302077-S	302081-S	302085-S	302089-S	302093-S	302097-S	302101-S	302105-S	302109-S
T	1 1/4	302074-S	302078-S	302082-S	302086-S	302090-S	302094-S	302098-S	302102-S	302106-S	302110-S
H	1 1/2	302075-S	302079-S	302083-S	302087-S	302091-S	302095-S	302099-S	302103-S	302107-S	302111-S
	1 3/4	302112-S 302113-S 302114-S 302115-S	302116-S 302117-S 302118-S 302119-S	302120-S 302121-S 302122-S 302123-S	302124-S 302125-S 302126-S 302127-S	302128-S 302129-S 302130-S 302131-S	302132-S 302133-S 302134-S 302135-S	302136-S 302137-S 302138-S 302139-S	302140-S 302141-S 302142-S 302143-S	302144-S 302145-S 302146-S 302147-S	302148-S 302149-S 302150-S 302151-S
	2										
	2 1/4										
	2 1/2										

NOTES: For General Specifications see Page C-950.01. For Finishes see Section "Z" Addendum.
MATERIAL: Steel - Medium Carbon Alloy, hardened by quenching in oil from the hardening temperature, and tempered to a Rockwell "C" hardness of 45-53.
SOCKET END CHAMFER: See General Specifications.
D^1 shows dimensions for screws having Full Dog Points only. (Part Numbers shown below double lines).
D^2 shows dimensions for screws having Half Dog Points only. (Part Numbers shown above double lines).

GENERAL SPECIFICATIONS

MACHINE SCREWS

HEAD HEIGHT: The head height is a metal to metal measurement and does not include material theoretically removed by recess or slot. Head height therefore extends from the top of the head to the bearing surface for 90° heads; from the intersection of the bearing surface and the basic body diameter[1] for full form countersunk heads, and to the undercut for undercut heads.

SIDE HEIGHT: Side height is a reference dimension which extends axially from the largest diameter of the bearing surface of countersunk heads to the intersection of the bearing surface and the basic body diameter[1] for full form countersunk heads and to the undercut for undercut heads.

HEAD EDGES: A slight rounding of all edges and corners of the hexagon heads is permissible provided the diameter of the bearing surface is not less than 90% of the minimum "Across Flats" dimension.

Edges of countersunk heads may be rounded but not to less than the absolute minimum diameter specified in the tables.

HEAD TAPER: Taper of sides of hexagon (angle between one side and the axis) shall not exceed 2° or .004 inch whichever is greater, the specified width across flats being the larger dimension.

HEAD DIMENSIONS: Dimensions across flats and across corners of hexagon heads shall be measured at the point of maximum material.

RECESS DEPTH: Recess depth is the axial distance from the rounded intersection of the head surface and maximum diameter of the recess, to the bottom of the recess.

SLOT DEPTH: Slot depth is the axial distance from the highest part of the head to the intersection of the bottom of the slot with the head surface.

BEARING SURFACE: The bearing surface of 90° heads shall be at right angles to the axis of the body within 2°.

ECCENTRICITY OF HEADS: Screw heads shall not be eccentric[2] with the screw bodies by more than 3% of the maximum head diameter or the maximum width across flats as applicable.

[1]This intersection is not always the junction of bearing surface and shank.
[2]Eccentricity is defined as one half of the total indicator reading.

GENERAL SPECIFICATIONS

ECCENTRICITY OF SLOTS: Slots in screw heads shall not be eccentric[1] with screw bodies by more than 6% of the nominal body diameter or .010 inch, whichever is greater.

ECCENTRICITY OF RECESSES: Recesses in screw heads shall not be eccentric[1] with screw bodies by more than 6% of the nominal body diameter or .015 inch, whichever is greater.

UNDER HEAD FILLETS: Under head radii shall not exceed values shown in Table 1. These values were computed on the following basis:

(1) Maximum fillet radii for 90° heads and undercut countersunk head types equals 15% of the basic body diameter.
(2) Maximum fillet radii for countersunk heads equal 40% of the basic body diameter.

TABLE 1 - UNDER HEAD RADII

Screw Size	4	6	8	10	12	1/4	5/16	3/8
90° Heads and Undercut C'Sunk Heads	.017	.021	.025	.028	.032	.038	.047	.056
Countersunk Heads	.045	.055	.066	.076	.086	.100	.125	.150

HEAD GAGING: Recess penetration and protrusion gaging values are shown in the dimensional tables. For gage tolerance, equipment and method see Section "Z" Addendum.

UNTHREADED BODY DIAMETER: The diameter of the unthreaded body shall not exceed the maximum major diameter nor be less than the minimum pitch diameter of the thread.

LENGTH: The axial distance from the largest diameter of the bearing surface of the head to the extreme point.

TOLERANCES IN LENGTH: For machine screws up to and including 1 inch in length, the tolerance shall be plus 0, minus 1/32 inch; for lengths over 1 inch to 2 inch inclusive, the tolerance shall be plus 0, minus 1/16 inch; and for lengths over 2 inches, the tolerance shall be plus 0, minus 3/32 inch.

POINTS: Header point screws are produced by pointing the screw blank at an included angle of 40-45°, to the diameter specified in Table 2. Screws longer than the maximum screw length listed may require machining, involving additional cost. Unpointed machine screws shall have plain sheared ends.

[1]Eccentricity is defined as one half of the total indicator reading.

GENERAL SPECIFICATIONS

TABLE 2 - HEADER POINT DIMENSIONS (CHAMFER OF BLANK BEFORE THREADING)

Screw Size	4	6	8	10		12
Threads Per Inch	40	32	32	24	32	24
Point Diameter	.074 .065	.090 .080	.114 .102	.125 .112	.138 .124	.149 .134
Screw Length (Max.)	1/2	3/4	1-	1-1/4	1-1/4	1-3/8

Screw Size	1/4		5/16		3/8	
Threads Per Inch	20	28	18	24	16	24
Point Diameter	.170 .153	.187 .169	.221 .200	.237 .215	.270 .244	.295 .267
Screw Length (Max.)	1-1/2	1-1/2	1-1/2	1-1/2	1-1/2	1-1/2

THREAD LENGTH: On machine screws 2- inch in length and shorter, full formed threads shall extend to within 2 threads of the bearing surface of the head or closer if practicable. Screws over 2- inch in length shall have a minimum length of 1-3/4 inch of full formed threads.

SCREW AND LOCK WASHER ASSEMBLIES

MACHINE SCREWS: The machine screw component of the assembly shall conform to the preceeding General Specifications for Machine Screws, except (1) that the maximum diameter of the unthreaded portion shall be less than the maximum major diameter of the thread by an amount sufficient to allow free rotation of the washer and (2) that on screws 2 inch long and shorter, the complete threads shall extend to within 2 threads of the bearing surface of the washer or closer if practicable.

SPRING LOCK WASHERS: Dimensions of the spring lock washer component of the assemblies are specified in the dimensional tabulations. They shall otherwise conform to the General Specifications for Standard Spring Lock Washers given in Section F except as noted below.

The washer inside diameter shall be of a size which will permit free rotation when assembled on the screw and yet prevent its disassembly from the screw.

GENERAL SPECIFICATIONS

TOOTH LOCK WASHERS: Dimensions of the tooth lock washer component of the assemblies are given in the dimensional tabulations. The washers shall otherwise conform to the General Specifications for Tooth Lock Washers given in Section F except as noted below.

Extrusion of a slight collar at the inside diameter of the countersunk washers for flat and oval head screws is permissible.

The washer inside diameter shall be of a size which will permit free rotation when assembled on the screw and yet prevent its disassembly from the screw.

The values for "W" specified in the dimensional tables for Oval Head Screw and Washer Assemblies shall apply when the assembly is seated. These dimensions can be checked by screwing a screw and washer assembly into a hardened steel block having an 80-82° countersunk hole.

SLOTTED HEADLESS SET SCREWS

ECCENTRICITY OF DOG POINTS: Dog points shall not be eccentric with screw bodies by more than 3% of the nominal screw diameter or .005 inch, whichever is greater. (Eccentricity is defined as one half of the total indicator reading.)

LENGTH: The length of a headless set screw is the greatest overall axial length.

TOLERANCES IN LENGTH: For set screws up to and including 1 inch in length the tolerance shall be plus 0, minus 1/32 inch; for lengths over 1 inch to 2 inch inclusive, the tolerance shall be plus 0, minus 1/16 inch; and for lengths over 2 inches, the tolerance shall be plus 0, minus 3/32 inch.

THREAD LENGTH: Slotted headless set screws shall be threaded the entire length of the body.

HEXAGON SOCKET SET SCREWS

ECCENTRICITY OF DOG POINTS: Dog points shall not be eccentric with screw bodies by more than 3% of the nominal screw diameter or .005 inch, whichever is greater. (Eccentricity is defined as one half of the total indicator reading.)

LENGTH: The length of a hexagon socket set screw is the greatest overall axial length.

GENERAL SPECIFICATIONS

TOLERANCES IN LENGTH: For set screws up to and including 2 inch in length, the tolerance shall be 3% of the specified length with a minimum of .020 inch, one half to be applied plus and one half minus. On lengths over 2 inch to 6 inch inclusive the tolerance shall be plus or minus 1/32 inch.

SOCKET END CHAMFER: Socket end of screw shall be flat and chamfered. The flat shall be normal to the axis of the screw and the chamfer shall be at an angle of 35-40° with the surface of the flat. The chamfer shall extend to the bottom of the thread and the edge between flat and chamfer shall be slightly rounded.

THREAD LENGTH: Hexagon socket set screws shall be threaded the entire length of the body.

SQUARE HEAD SET SCREWS

HEAD HEIGHT: Head height is the axial distance from the highest point of the head to the furthermost point of the radius of the flat. This dimension does not include the recess width or length of countersink.

LENGTH: The length of a square head set screw is the axial distance from the lowest point of the radius of the flat to the extreme end of the point. This length does not include Head Height.

TOLERANCES IN LENGTH: Tolerances on screw length for sizes up to and including 5/8 inch shall be: minus 1/32 inch for lengths up to and including 1 inch; minus 1/16 inch for lengths over 1 inch up to and including 2 inch; minus 3/32 inch for lengths over 2 inch. For sizes above 5/8 inch, the tolerance shall be: minus 1/16 inch for lengths up to and including 1 inch; minus 1/8 inch for lengths over 1 inch up to and including 2 inch; and minus 3/16 inch for lengths over 2 inch.

GENERAL

DEFECTS: Parts must be free from burrs, loose scale, sharp edges and all other defects that might affect their serviceability.

The specifications in this section were developed without considering whether patents may or may not be involved. In all cases, therefore the supplier shall be required to assume patent liability.

FORD MOTOR COMPANY
STANDARD PARTS

SECTION D

MISC. SCREWS

D
MISC. SCREWS

FORD MOTOR COMPANY
STANDARD PARTS

TAPPING SCREWS FILLISTER HEAD

SLOTTED TYPES B & BP

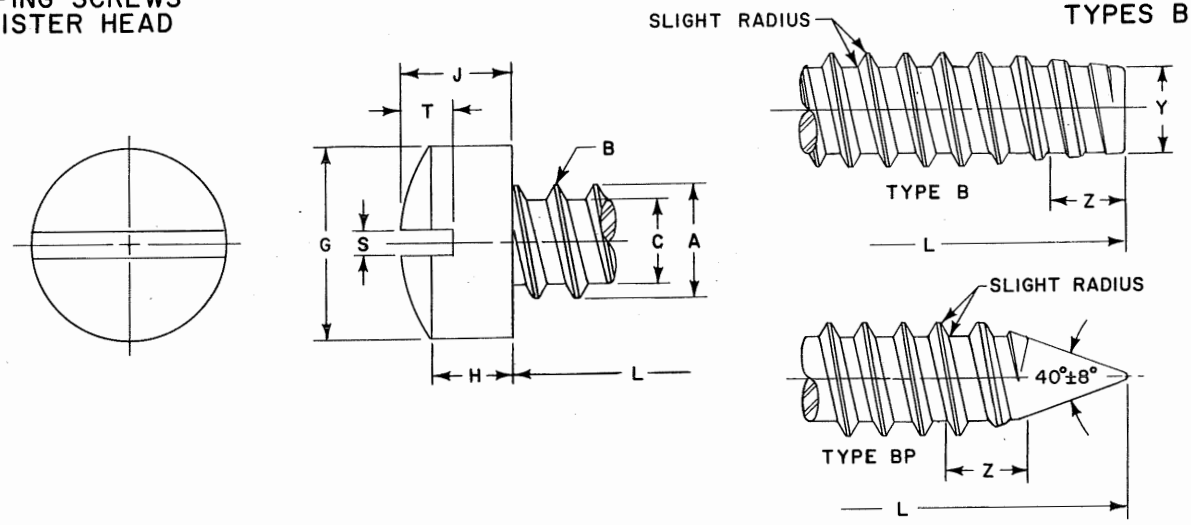

	Screw Size	4	5	6	7	8	10	12	1/4
B	Threads Per Inch	24	20	20	19	18	16	14	14
A	Major Dia. of Thread	.114 .110	.130 .126	.139 .135	.154 .149	.166 .161	.189 .183	.215 .209	.246 .240
C	Minor Dia. of Thread	.086 .082	.094 .090	.104 .099	.115 .109	.122 .116	.141 .135	.164 .157	.192 .185
G	Head Diameter	.183 .166	.205 .187	.226 .208	.248 .229	.270 .250	.313 .292	.357 .334	.414 .389
H	Side Height	.079 .069	.088 .078	.096 .086	.105 .094	.113 .102	.130 .118	.148 .134	.170 .155
J	Total Head Height	.107 .088	.120 .100	.132 .111	.144 .122	.156 .133	.180 .156	.205 .178	.237 .207
S	Slot Width	.039 .031	.043 .035	.048 .039	.048 .039	.054 .045	.060 .050	.067 .056	.075 .064
T	Slot Depth	.048 .035	.054 .040	.060 .045	.065 .049	.071 .054	.083 .064	.094 .074	.109 .087
Y	Point Diameter	.079 .074	.087 .082	.095 .089	.105 .099	.112 .106	.130 .123	.152 .145	.179 .171
L	LENGTH	FORD PART NUMBERS					TYPE B		
1/4		42168-S	42169-S	42170-S	42171-S	42172-S	42173-S	42174-S	
3/8		42175-S	42176-S	42177-S	42178-S	42179-S	42180-S	42181-S	31514-S
1/2		42182-S	42183-S	42184-S	42185-S	42186-S	42187-S	42188-S	31515-S
5/8		42189-S	42190-S	42191-S	42192-S	42193-S	42194-S	42195-S	31516-S
3/4		42196-S	42197-S	42198-S	42199-S	42200-S	42201-S	42202-S	42203-S
7/8				42204-S	42205-S	42206-S	42207-S	42208-S	42209-S
1					42210-S	42211-S	42212-S	42213-S	42214-S
1 1/4					42215-S	42216-S	42217-S	42218-S	42219-S
1 1/2						42220-S	42221-S	42222-S	42223-S
1 3/4						42224-S	42225-S	42226-S	42227-S
L	LENGTH	FORD PART NUMBERS					TYPE BP		
1/4		42408-S	42409-S	42410-S	42411-S	42412-S			
3/8		42415-S	42416-S	42417-S	42418-S	42419-S	42420-S	42421-S	31546-S
1/2		42422-S	42423-S	42424-S	42425-S	42426-S	42427-S	42428-S	31547-S
5/8		42429-S	42430-S	42431-S	42432-S	42433-S	42434-S	42435-S	31548-S
3/4		42436-S	42437-S	42438-S	42439-S	42440-S	42441-S	42442-S	42443-S
7/8				42444-S	42445-S	42446-S	42447-S	42448-S	42449-S
1					42450-S	42451-S	42452-S	42453-S	42454-S
1 1/4					42455-S	42456-S	42457-S	42458-S	42459-S
1 1/2						42460-S	42461-S	42462-S	42463-S
1 3/4						42464-S	42465-S	42466-S	42467-S

NOTES: For General Specifications see Page D-950.01. For Finishes see Section "Z" Addendum.
MATERIAL: Steel, case hardened.
Screw lengths greater than " short length" Series, (Part Numbers shown below double line) shall have a taper length "Z" of 2- to 2-1/2 times the pitch distance. (See General Specifications.)
Short length screws (Part Numbers shown above double lines) shall have a taper length "Z" of 1-1/2 to 2- times the pitch distance. (See General Specifications.)
Type BP short length screws (Part Numbers shown above double line) are impractical to manufacture.

FORD MOTOR COMPANY
STANDARD PARTS

TAPPING SCREWS
FILLISTER HEAD

SLOTTED
TYPE C

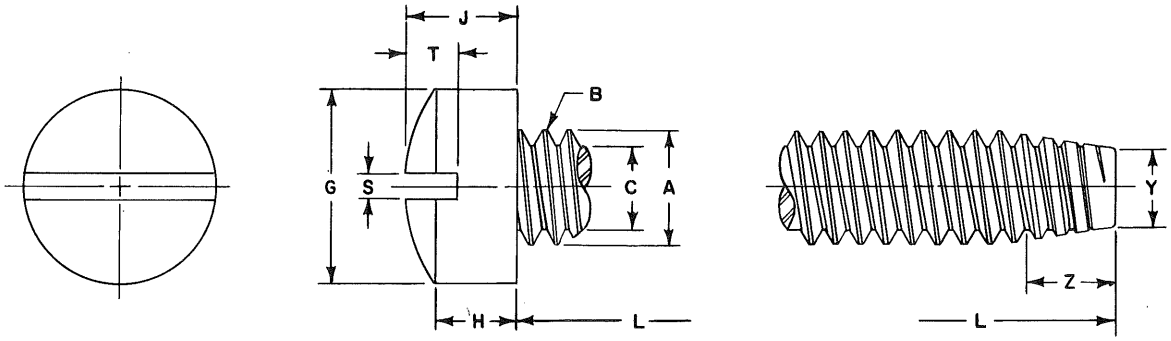

	Screw Size	6	8	10		12	1/4		5/16		3/8	
B	Threads Per Inch	32	32	24	32	24	20	28	18	24	16	24
A	Major Dia. of Thread	.1380 .1326	.1640 .1586	.1900 .1834	.1900 .1846	.2160 .2094	.2500 .2428	.2500 .2438	.3125 .3043	.3125 .3059	.3750 .3660	.3750 .3684
C	Minor Dia. of Thread (Max.)	.0997	.1257	.1389	.1517	.1649	.1887	.2062	.2443	.2614	.2983	.3239
G	Head Diameter	.226 .208	.270 .250	.313 .292	.313 .292	.357 .334	.414 .389	.414 .389	.518 .490	.518 .490	.622 .590	.622 .590
H	Side Height	.096 .086	.113 .102	.130 .118	.130 .118	.148 .134	.170 .155	.170 .155	.211 .194	.211 .194	.253 .233	.253 .233
J	Total Head Height	.132 .111	.156 .133	.180 .156	.180 .156	.205 .178	.237 .207	.237 .207	.295 .262	.295 .262	.355 .315	.355 .315
S	Slot Width	.048 .039	.054 .045	.060 .050	.060 .050	.067 .056	.075 .064	.075 .064	.084 .072	.084 .072	.094 .081	.094 .081
T	Slot Depth	.060 .045	.071 .054	.083 .064	.083 .064	.094 .074	.109 .087	.109 .087	.137 .110	.137 .110	.164 .133	.164 .133
Y	Point Diameter	.106 .095	.132 .121	.147 .133	.158 .147	.173 .159	.198 .181	.213 .201	.255 .236	.269 .255	.310 .289	.332 .318
L	LENGTH	FORD PART NUMBERS										
1/4		40240-S	40241-S	40242-S	40243-S							
3/8		40253-S	40254-S	40255-S	40256-S	40257-S	40258-S	40259-S	40260-S	40261-S		
1/2		40266-S	40267-S	40268-S	40269-S	40270-S	40271-S	40272-S	40273-S	40274-S	40275-S	40276-S
5/8		40279-S	40280-S	40281-S	40282-S	40283-S	40284-S	40285-S	40286-S	40287-S	40288-S	40289-S
3/4		40292-S	40293-S	40294-S	40295-S	40296-S	40297-S	40298-S	40299-S	40300-S	40301-S	40302-S
7/8		40305-S	40306-S	40307-S	40308-S	40309-S	40310-S	40311-S	40312-S	40313-S	40314-S	40315-S
1		40318-S	40319-S	40320-S	40321-S	40322-S	40323-S	40324-S	40325-S	40326-S	40327-S	40328-S
1 1/4		40331-S	40332-S	40333-S	40334-S	40335-S	40336-S	40337-S	40338-S	40339-S	40340-S	40341-S
1 1/2		40344-S	40345-S	40346-S	40347-S	40348-S	40349-S	40350-S	40351-S	40352-S	40353-S	40354-S
1 3/4		40357-S	40358-S	40359-S	40360-S	40361-S	40362-S	40363-S	40364-S	40365-S	40366-S	40367-S

NOTES: For General Specifications see Page D-950.01. For Finishes see Section "Z" Addendum.
MATERIAL: Steel, case hardened.
Screws longer than 8 pitches in length (Part Numbers shown below double lines) shall have a taper length "Z" of 3-1/2 to 4-1/2 times the pitch distance. (See General Specifications.)
Screws 8 pitches or shorter in length (Part Numbers shown above double line) shall have a taper length "Z" of 2-1/2 to 3-1/2 times the pitch distance. (See General Specifications.)

FORD MOTOR COMPANY
STANDARD PARTS

TAPPING SCREWS
FILLISTER HEAD

SLOTTED
TYPES D, F, & G

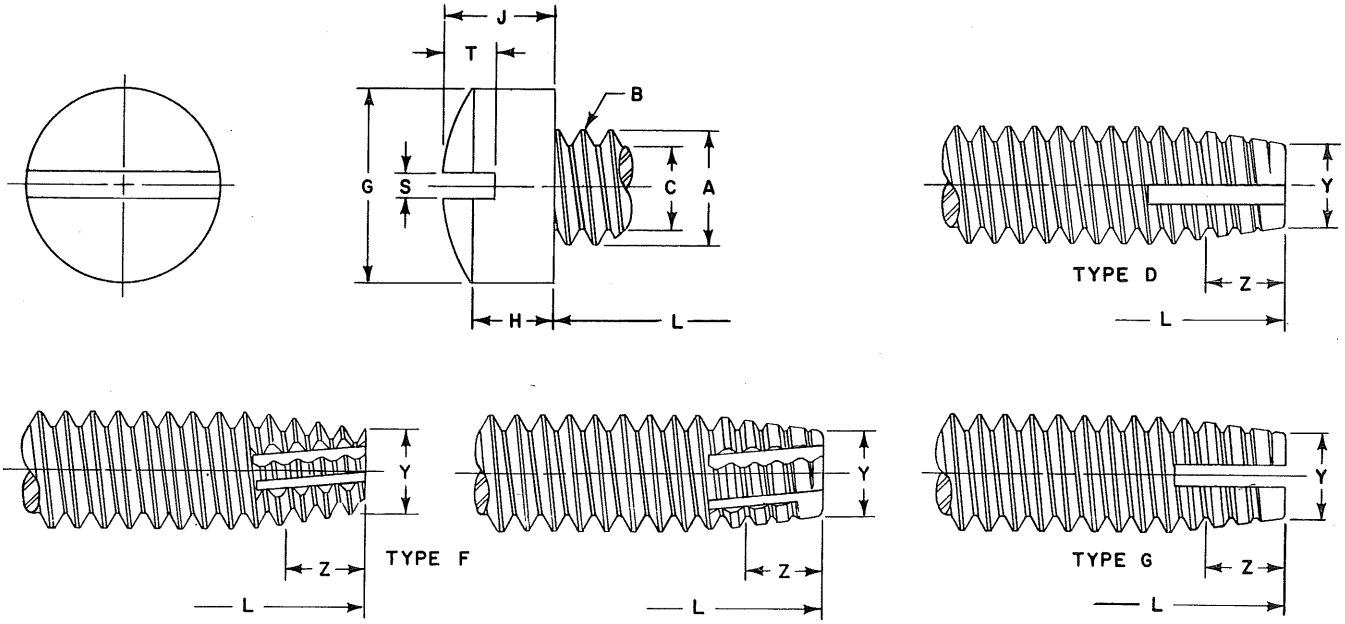

	Screw Size	6	8	10		12	1/4		5/16		3/8	
B	Threads Per Inch	32	32	24	32	24	20	28	18	24	16	24
A	Major Dia. of Thread	.1380 .1326	.1640 .1586	.1900 .1834	.1900 .1846	.2160 .2094	.2500 .2428	.2500 .2438	.3125 .3043	.3125 .3059	.3750 .3660	.3750 .3684
C	Minor Dia. of Thread (Max.)	.0997	.1257	.1389	.1517	.1649	.1887	.2062	.2443	.2614	.2983	.3239
G	Head Diameter	.226 .208	.270 .250	.313 .292	.313 .292	.357 .334	.414 .389	.414 .389	.518 .490	.518 .490	.622 .590	.622 .590
H	Side Height	.096 .086	.113 .102	.130 .118	.130 .118	.148 .134	.170 .155	.170 .155	.211 .194	.211 .194	.253 .233	.253 .233
J	Total Head Height	.132 .111	.156 .133	.180 .156	.180 .156	.205 .178	.237 .207	.237 .207	.295 .262	.295 .262	.355 .315	.355 .315
S	Slot Width	.048 .039	.054 .045	.060 .050	.060 .050	.067 .056	.075 .064	.075 .064	.084 .072	.084 .072	.094 .081	.094 .081
T	Slot Depth	.060 .045	.071 .054	.083 .064	.083 .064	.094 .074	.109 .087	.109 .087	.137 .110	.137 .110	.164 .133	.164 .133
Y	Point Diameter	.106 .095	.132 .121	.147 .133	.158 .147	.173 .159	.198 .181	.213 .201	.255 .236	.269 .255	.310 .289	.332 .318
L	LENGTH	FORD PART NUMBERS										
1/4		41280-S	41281-S	41282-S	41283-S							
3/8		41293-S	41294-S	41295-S	41296-S	41297-S	41298-S	41299-S	41300-S	41301-S		
1/2		41306-S	41307-S	41308-S	41309-S	41310-S	41311-S	41312-S	41313-S	41314-S	41315-S	41316-S
5/8		41319-S	41320-S	41321-S	41322-S	41323-S	41324-S	41325-S	41326-S	41327-S	41328-S	41329-S
3/4		41332-S	41333-S	41334-S	41335-S	41336-S	41337-S	41338-S	41339-S	41340-S	41341-S	41342-S
7/8		41345-S	41346-S	41347-S	41348-S	41349-S	41350-S	41351-S	41352-S	41353-S	41354-S	41355-S
1		41358-S	41359-S	41360-S	41361-S	41362-S	41363-S	41364-S	41365-S	41366-S	41367-S	41368-S
1 1/4		41371-S	41372-S	41373-S	41374-S	41375-S	41376-S	41377-S	41378-S	41379-S	41380-S	41381-S
1 1/2		41384-S	41385-S	41386-S	41387-S	41388-S	41389-S	41390-S	41391-S	41392-S	41393-S	41394-S
1 3/4		41397-S	41398-S	41399-S	41400-S	41401-S	41402-S	41403-S	41404-S	41405-S	41406-S	41407-S

NOTES: For General Specifications see Page D-950.01. For Finishes see Section "Z" Addendum.
MATERIAL: Steel, case hardened.
Screws longer than 8 pitches in length (Part Numbers shown below double line) shall have a taper length "Z" of 3-1/2 to 4-1/2 times the pitch distance. (See General Specifications.)
Screws 8 pitches or shorter in length (Part Numbers shown above double line) shall have a taper length "Z" of 2-1/2 to 3-1/2 times the pitch distance. (See General Specifications.)

FORD MOTOR COMPANY
STANDARD PARTS

TAPPING SCREWS
FILLISTER HEAD

CROSS RECESSED
TYPE A

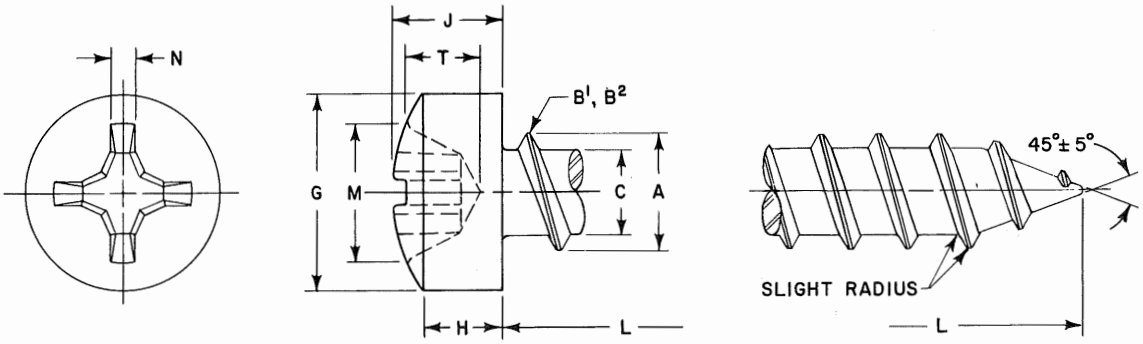

	Screw Size	4	5	6	7	8	10	12	14
B^1	Threads Per Inch	24	20	18	16	15	12	11	10
B^2	Threads Per Inch	24	20	20	19	18	16	14	14
A	Major Dia. of Thread	.114 .110	.130 .126	.141 .136	.158 .152	.168 .162	.194 .188	.221 .215	.254 .248
C	Minor Dia. of Thread	.083 .078	.095 .090	.102 .096	.114 .108	.123 .116	.133 .126	.162 .155	.185 .178
G	Head Diameter	.183 .166	.205 .187	.226 .208	.248 .229	.270 .250	.313 .292	.357 .334	.400 .376
H	Side Height	.079 .069	.088 .078	.096 .086	.105 .094	.113 .102	.130 .118	.148 .134	.165 .151
J	Total Head Height	.107 .088	.120 .100	.132 .111	.144 .122	.156 .133	.180 .156	.205 .178	.230 .201
M	Recess Diameter	.122 .109	.148 .135	.166 .153	.176 .163	.182 .169	.199 .186	.259 .246	.281 .268
T	Recess Depth	.078 .060	.067 .042	.091 .066	.100 .075	.108 .082	.124 .100	.141 .115	.161 .135
N	Recess Width	.019	.027	.028	.029	.030	.031	.034	.036
	Driver Size	1	2	2	2	2	2	3	3
	Penetration Gaging Depth	.071 .053	.056 .031	.080 .055	.089 .064	.097 .071	.113 .089	.124 .098	.144 .118
L	LENGTH	FORD PART NUMBERS							
	1/4	52531-S	52532-S	52533-S	52534-S	52535-S			
	3/8	52536-S	52537-S	52538-S	52539-S	52540-S	52541-S		
	1/2	52542-S	52543-S	52544-S	52545-S	52546-S	52547-S	52548-S	52549-S
	5/8	52550-S	52551-S	52552-S	52553-S	52554-S	52555-S	52556-S	52557-S
	3/4	52558-S	52559-S	52560-S	52561-S	52562-S	52563-S	52564-S	52565-S
	7/8			52566-S	52567-S	52568-S	52569-S	52570-S	52571-S
	1			52572-S	52573-S	52574-S	52575-S	52576-S	52577-S
	1 1/4					52578-S	52579-S	52580-S	52581-S
	1 1/2						52582-S	52583-S	52584-S
	1 3/4						52585-S	52586-S	52587-S

NOTES: For General Specifications see Page D-950.01. For Finishes see Section "Z" Addendum.
MATERIAL: Steel, case hardened.
B^1 shows number of threads for standard length screws only. (Part Numbers shown below double lines.)
B^2 shows number of threads for short length screws only. (Part Numbers shown above double lines.)
Recess penetration gaging values are shown above. For method and gaging equipment see Section "Z" Addendum.

FORD MOTOR COMPANY
STANDARD PARTS

TAPPING SCREWS
FILLISTER HEAD

CROSS RECESSED
TYPES B & BP

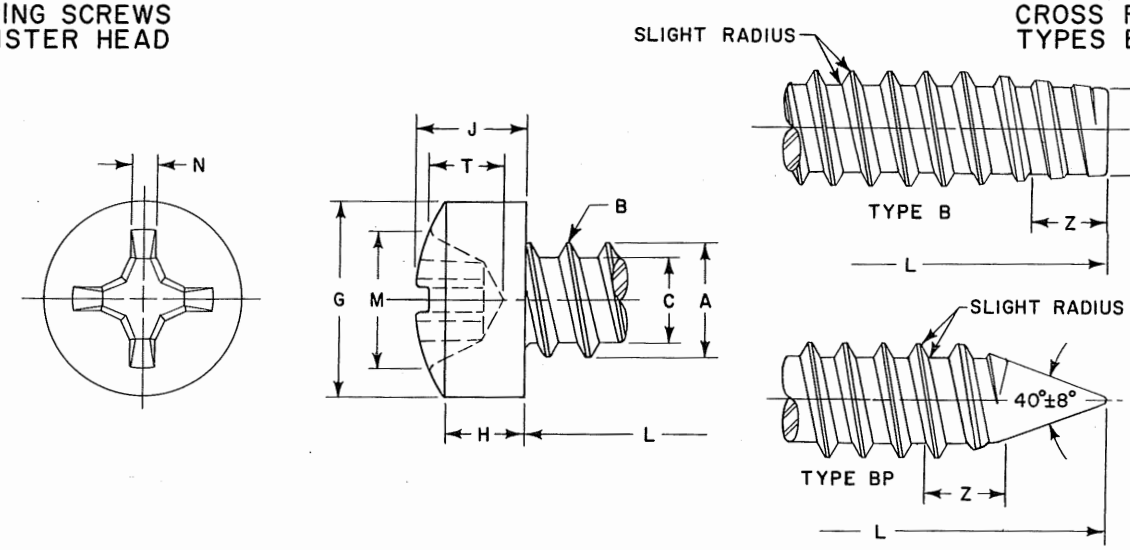

	Screw Size	4	5	6	7	8	10	12	1/4
B	Threads Per Inch	24	20	20	19	18	16	14	14
A	Major Dia. of Thread	.114 .110	.130 .126	.139 .135	.154 .149	.166 .161	.189 .183	.215 .209	.246 .240
C	Minor Dia. of Thread	.086 .082	.094 .090	.104 .099	.115 .109	.122 .116	.141 .135	.164 .157	.192 .185
G	Head Diameter	.183 .166	.205 .187	.226 .208	.248 .229	.270 .250	.313 .292	.357 .334	.414 .389
H	Side Height	.079 .069	.088 .078	.096 .086	.105 .094	.113 .102	.130 .118	.148 .134	.170 .155
J	Total Head Height	.107 .088	.120 .100	.132 .111	.144 .122	.156 .133	.180 .156	.205 .178	.237 .207
M	Recess Diameter	.122 .109	.148 .135	.166 .153	.176 .163	.182 .169	.199 .186	.259 .246	.281 .268
T	Recess Depth	.078 .060	.067 .042	.091 .066	.100 .075	.108 .082	.124 .100	.141 .115	.161 .135
N	Recess Width	.019	.027	.028	.029	.030	.031	.034	.036
	Driver Size	1	2	2	2	2	2	3	3
	Penetration Gaging Depth	.071 .053	.056 .031	.080 .055	.089 .064	.097 .071	.113 .089	.124 .098	.144 .118
Y	Point Diameter	.079 .074	.087 .082	.095 .089	.105 .099	.112 .106	.130 .123	.152 .145	.179 .171
L	LENGTH	FORD PART NUMBERS					TYPE B		
1/4		52591-S	52592-S	52593-S	52594-S	52595-S			
3/8		52596-S	52597-S	52598-S	52599-S	52600-S	52601-S		
1/2		52602-S	52603-S	52604-S	52605-S	52606-S	52607-S	52608-S	52609-S
5/8		52610-S	52611-S	52612-S	52613-S	52614-S	52615-S	52616-S	52617-S
3/4		52618-S	52619-S	52620-S	52621-S	52622-S	52623-S	52624-S	52625-S
7/8				52626-S	52627-S	52628-S	52629-S	52630-S	52631-S
1				52632-S	52633-S	52634-S	52635-S	52636-S	52637-S
1 1/4						52638-S	52639-S	52640-S	52641-S
1 1/2							52642-S	52643-S	52644-S
1 3/4							52645-S	52646-S	52647-S
L	LENGTH	FORD PART NUMBERS					TYPE BP		
1/4		52651-S	52652-S	52653-S	52654-S	52655-S			
3/8		52656-S	52657-S	52658-S	52659-S	52660-S	52661-S		
1/2		52663-S	52664-S	52665-S	52666-S	52667-S	52668-S	52669-S	52670-S
5/8		52671-S	52672-S	52673-S	52674-S	52675-S	52676-S	52677-S	52678-S
3/4		52679-S	52680-S	52681-S	52682-S	52683-S	52684-S	52685-S	52686-S
7/8				52687-S	52688-S	52689-S	52690-S	52691-S	52692-S
1				52693-S	52694-S	52695-S	52696-S	52697-S	52698-S
1 1/4						52699-S	52700-S	52701-S	52702-S
1 1/2							52703-S	52704-S	52705-S
1 3/4							52706-S	52707-S	52708-S

NOTES: For General Specifications see Page D-950.01. For Finishes see Section "Z" Addendum.
MATERIAL: Steel, case hardened.
Screw lengths greater than "short length" series, (Part Numbers shown below double line) shall have a taper length "Z" of 2- to 2-1/2 times the pitch distance. (See General Specifications).
Short length screws (Part Numbers shown above double lines) shall have a taper length "Z" of 1-1/2 to 2- times the pitch distance. (See General Specifications).
Type BP short length screws (Part Numbers shown above double line) are impractical to manufacture.
Recess penetration gaging values are shown above. For method and gaging equipment see Section "Z" Addendum.

FORD MOTOR COMPANY
STANDARD PARTS

TAPPING SCREWS
FILLISTER HEAD

CROSS RECESSED
TYPE C

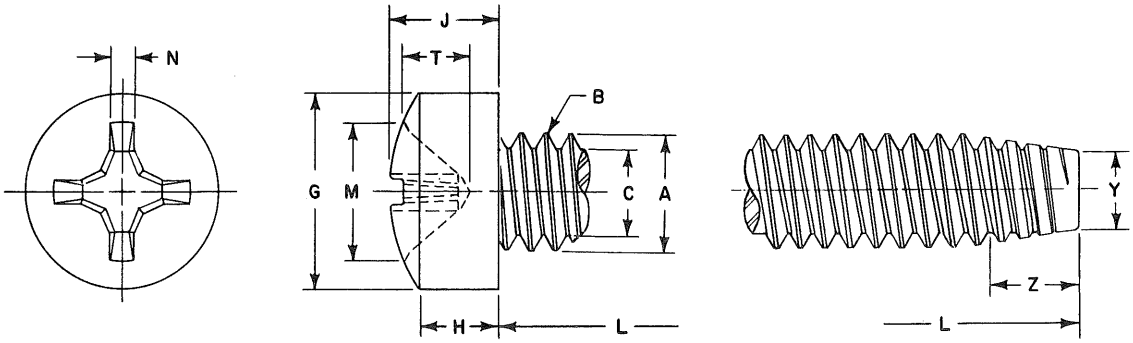

	Screw Size	6	8	10		12	1/4		5/16		3/8	
B	Threads Per Inch	32	32	24	32	24	20	28	18	24	16	24
A	Major Dia. of Thread	.1380 .1326	.1640 .1586	.1900 .1834	.1900 .1846	.2160 .2094	.2500 .2428	.2500 .2438	.3125 .3043	.3125 .3059	.3750 .3660	.3750 .3684
C	Minor Dia. of Thread (Max.)	.0997	.1257	.1389	.1517	.1649	.1887	.2062	.2443	.2614	.2983	.3239
G	Head Diameter	.226 .208	.270 .250	.313 .292	.313 .292	.357 .334	.414 .389	.414 .389	.518 .490	.518 .490	.622 .590	.622 .590
H	Side Height	.096 .086	.113 .102	.130 .118	.130 .118	.148 .134	.170 .155	.170 .155	.211 .194	.211 .194	.253 .233	.253 .233
J	Total Head Height	.132 .111	.156 .133	.180 .156	.180 .156	.205 .178	.237 .207	.237 .207	.295 .262	.295 .262	.355 .315	.355 .315
M	Recess Diameter	.166 .153	.182 .169	.199 .186	.199 .186	.259 .246	.281 .268	.281 .268	.322 .309	.322 .309	.393 .380	.393 .380
T	Recess Depth	.091 .066	.108 .082	.124 .100	.124 .100	.141 .115	.161 .135	.161 .135	.235 .209	.235 .209	.233 .210	.233 .210
N	Recess Width	.028	.030	.031	.031	.034	.036	.036	.042	.042	.065	.065
	Driver Size	2	2	2	2	3	3	3	3	3	4	4
	Penetration Gaging Depth	.080 .055	.097 .071	.113 .089	.113 .089	.124 .098	.144 .118	.144 .118	.186 .160	.186 .160	.213 .190	.213 .190
Y	Point Diameter	.106 .095	.132 .121	.147 .133	.158 .147	.173 .159	.198 .181	.213 .201	.255 .236	.269 .255	.310 .289	.332 .318
L	LENGTH	FORD PART NUMBERS										
1/4		51650-S	51651-S	51652-S	51653-S							
3/8		51654-S	51655-S	51656-S	51657-S	51658-S	51659-S	51660-S	51661-S	51662-S		
1/2		51663-S	51664-S	51665-S	51666-S	51667-S	51668-S	51669-S	51670-S	51671-S	51672-S	51673-S
5/8 3/4 7/8		51674-S 51685-S 51696-S	51675-S 51686-S 51697-S	51676-S 51687-S 51698-S	51677-S 51688-S 51699-S	51678-S 51689-S 51700-S	51679-S 51690-S 51701-S	51680-S 51691-S 51702-S	51681-S 51692-S 51703-S	51682-S 51693-S 51704-S	51683-S 51694-S 51705-S	51684-S 51695-S 51706-S
1 1 1/4 1 1/2 1 3/4		51707-S 51718-S 51729-S	51708-S 51719-S 51730-S 51740-S	51709-S 51720-S 51731-S 51741-S	51710-S 51721-S 51732-S 51742-S	51711-S 51722-S 51733-S 51743-S	51712-S 51723-S 51734-S 51744-S	51713-S 51724-S 51735-S 51745-S	51714-S 51725-S 51736-S 51746-S	51715-S 51726-S 51737-S 51747-S	51716-S 51727-S 51738-S 51748-S	51717-S 51728-S 51739-S 51749-S

NOTES: For General Specifications see Page D-950.01. For Finishes see Section "Z" Addendum.
MATERIAL: Steel, case hardened.
Screws longer than 8 pitches in length (Part Numbers shown below double line) shall have a taper length "Z" of 3-1/2 to 4-1/2 times the pitch distance. (See General Specifications.)
Screws 8 pitches or shorter in length (Part Numbers shown above double line) shall have a taper length "Z" of 2-1/2 to 3-1/2 times the pitch distance. (See General Specifications.)
Recess penetration gaging values are shown above. For method and gaging equipment see Section "Z" Addendum.

FORD MOTOR COMPANY
STANDARD PARTS

TAPPING SCREWS
FILLISTER HEAD

CROSS RECESSED
TYPES D, F, & G

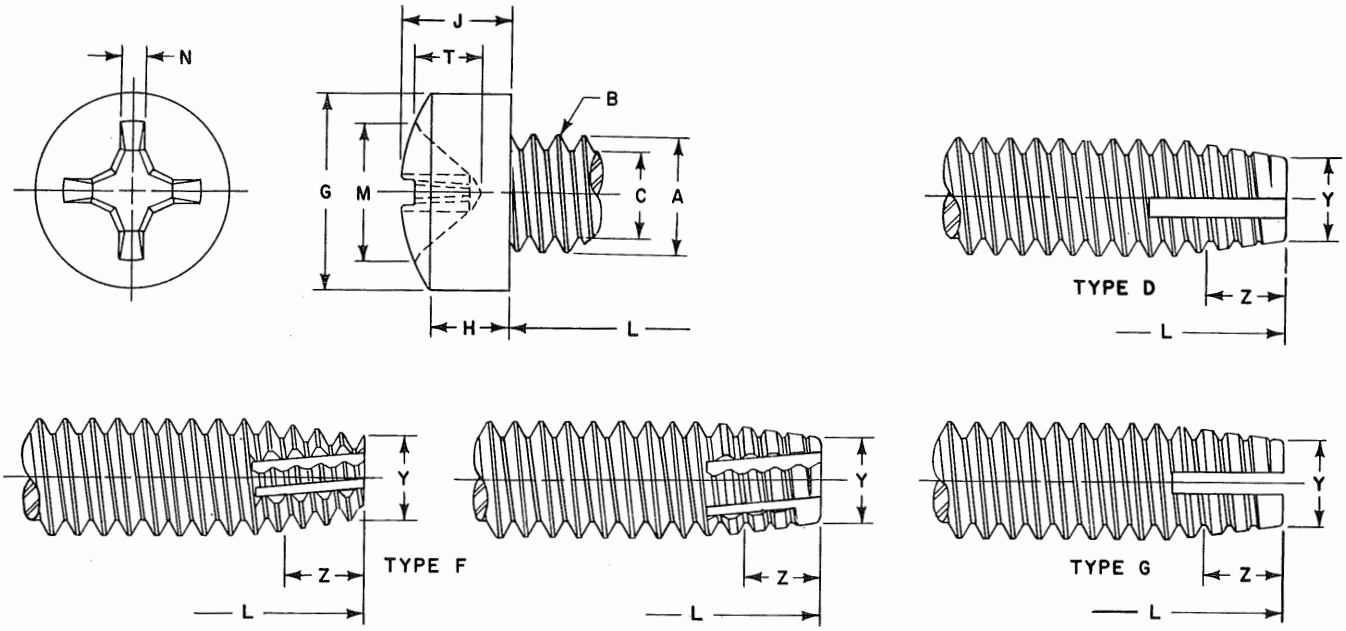

	Screw Size	6	8	10		12	1/4		5/16		3/8	
B	Threads Per Inch	32	32	24	32	24	20	28	18	24	16	24
A	Major Dia. of Thread	.1380 .1326	.1640 .1586	.1900 .1834	.1900 .1846	.2160 .2094	.2500 .2428	.2500 .2438	.3125 .3043	.3125 .3059	.3750 .3660	.3750 .3684
C	Minor Dia. of Thread (Max.)	.0997	.1257	.1389	.1517	.1649	.1887	.2062	.2443	.2614	.2983	.3239
G	Head Diameter	.226 .208	.270 .250	.313 .292	.313 .292	.357 .334	.414 .389	.414 .389	.518 .490	.518 .490	.622 .590	.622 .590
H	Side Height	.096 .086	.113 .102	.130 .118	.130 .118	.148 .134	.170 .155	.170 .155	.211 .194	.211 .194	.253 .233	.253 .233
J	Total Head Height	.132 .111	.156 .133	.180 .156	.180 .156	.205 .178	.237 .207	.237 .207	.295 .262	.295 .262	.355 .315	.355 .315
M	Recess Diameter	.166 .153	.182 .169	.199 .186	.199 .186	.259 .246	.281 .268	.281 .268	.322 .309	.322 .309	.393 .380	.393 .380
T	Recess Depth	.091 .066	.108 .082	.124 .100	.124 .100	.141 .115	.161 .135	.161 .135	.235 .209	.235 .209	.233 .210	.233 .210
N	Recess Width	.028	.030	.031	.031	.034	.036	.036	.042	.042	.065	.065
	Driver Size	2	2	2	2	3	3	3	3	3	4	4
	Penetration Gaging Depth	.080 .055	.097 .071	.113 .089	.113 .089	.124 .098	.144 .118	.144 .118	.186 .160	.186 .160	.213 .190	.213 .190
Y	Point Diameter	.106 .095	.132 .121	.147 .133	.158 .147	.173 .159	.198 .181	.213 .201	.255 .236	.269 .255	.310 .289	.332 .318
L	LENGTH	FORD PART NUMBERS										
1/4		51550-S	51551-S	51552-S	51553-S							
3/8		51554-S	51555-S	51556-S	51557-S	51558-S	51559-S	51560-S	51561-S	51562-S		
1/2		51563-S	51564-S	51565-S	51566-S	51567-S	51568-S	51569-S	51570-S	51571-S	51572-S	51573-S
5/8 3/4 7/8		51574-S 51585-S 51596-S	51575-S 51586-S 51597-S	51576-S 51587-S 51598-S	51577-S 51588-S 51599-S	51578-S 51589-S 51600-S	51579-S 51590-S 51601-S	51580-S 51591-S 51602-S	51581-S 51592-S 51603-S	51582-S 51593-S 51604-S	51583-S 51594-S 51605-S	51584-S 51595-S 51606-S
1 1 1/4 1 1/2 1 3/4		51607-S 51618-S 51629-S	51608-S 51619-S 51630-S 51640-S	51609-S 51620-S 51631-S 51641-S	51610-S 51621-S 51632-S 51642-S	51611-S 51622-S 51633-S 51643-S	51612-S 51623-S 51634-S 51644-S	51613-S 51624-S 51635-S 51645-S	51614-S 51625-S 51636-S 51646-S	51615-S 51626-S 51637-S 51647-S	51616-S 51627-S 51638-S 51648-S	51617-S 51628-S 51639-S 51649-S

NOTES: For General Specifications see Page D-950.01. For Finishes see Section "Z" Addendum.
MATERIAL: Steel, case hardened.
Screws longer than 8 pitches in length (Part Numbers shown below double line) shall have a taper length "Z" of 3-1/2 to 4-1/2 times the pitch distance. (See General Specifications.)
Screws 8 pitches or shorter in length (Part Numbers shown above double line) shall have a taper length "Z" of 2-1/2 to 3-1/2 times the pitch distance. (See General Specifications.)
Recess penetration gaging values are shown above. For method and gaging equipment see Section "Z" Addendum.

FORD MOTOR COMPANY
STANDARD PARTS

TAPPING SCREWS
FLAT HEAD

SLOTTED
TYPE A

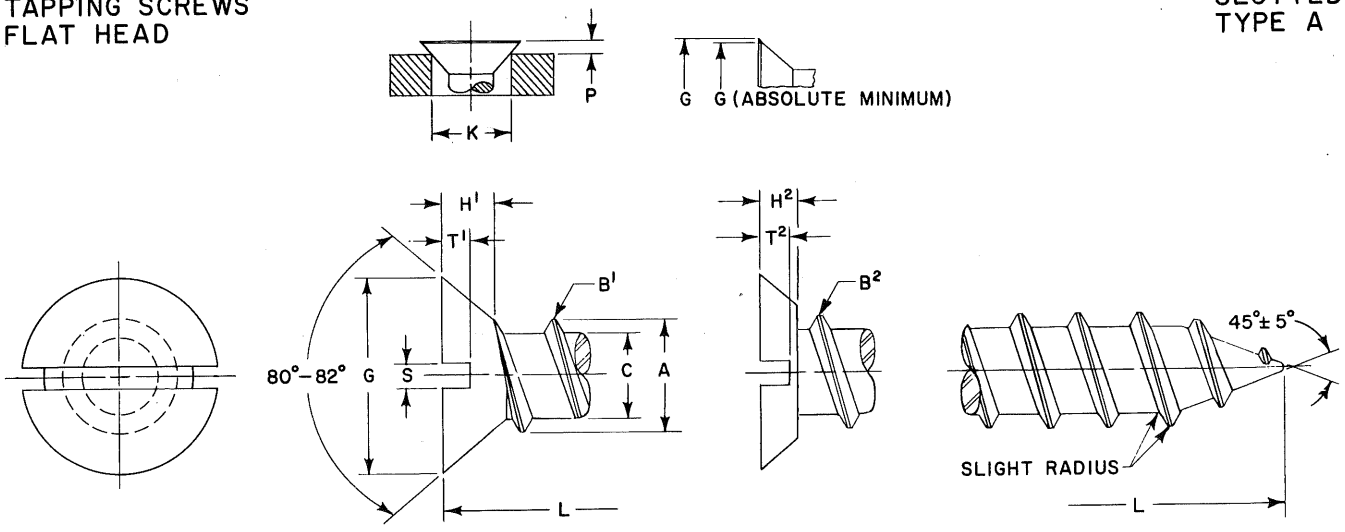

	Screw Size	4	5	6	7	8	10	12	14
B^1	Threads Per Inch	24	20	18	16	15	12	11	10
B^2	Threads Per Inch	24	20	20	19	18	16	14	14
A	Major Dia. of Thread	.114 .110	.130 .126	.141 .136	.158 .152	.168 .162	.194 .188	.221 .215	.254 .248
C	Minor Dia. of Thread	.083 .078	.095 .090	.102 .096	.114 .108	.123 .116	.133 .126	.162 .155	.185 .178
G	Head Dia. (Max. Sharp) (Min. Sharp) (Abs. Min.)	.225 .207 .195	.252 .232 .220	.279 .257 .244	.305 .283 .268	.332 .308 .292	.385 .359 .340	.438 .410 .389	.491 .461 .437
K	Gaging Diameter	.172	.196	.220	.243	.267	.313	.362	.410
P	Protrusion Above Gaging Dia.	.032 .019	.034 .020	.036 .021	.037 .022	.039 .023	.042 .025	.045 .027	.049 .029
H^1	Head Height (Ref.)	.067	.075	.083	.091	.100	.116	.132	.148
H^2	Head Height	.047 .038	.053 .043	.059 .048	.064 .053	.070 .058	.081 .068	.092 .078	.104 .088
S	Slot Width	.039 .031	.043 .035	.048 .039	.048 .039	.054 .045	.060 .050	.067 .056	.075 .064
T^1	Slot Depth	.030 .020	.034 .022	.038 .024	.041 .027	.045 .029	.053 .034	.060 .039	.068 .044
T^2	Slot Depth	.022 .014	.024 .016	.027 .017	.030 .019	.032 .021	.037 .024	.043 .028	.048 .031
L	LENGTH	FORD PART NUMBERS							
1/4		32775-S							
3/8		32782-S	32783-S	32784-S	32785-S	32786-S			
1/2		32789-S	32790-S	32791-S	32792-S	32793-S	32794-S	32795-S	31469-S
5/8		32796-S	32797-S	32798-S	32799-S	32800-S	32801-S	32802-S	31470-S
3/4		32803-S	32804-S	32805-S	32806-S	32807-S	32808-S	32809-S	32810-S
7/8				32811-S	32812-S	32813-S	32814-S	32815-S	32816-S
1					32817-S 32822-S	32818-S 32823-S 32827-S 32831-S	32819-S 32824-S 32828-S 32832-S	32820-S 32825-S 32829-S 32833-S	32821-S 32826-S 32830-S 32834-S
1 1/4									
1 1/2									
1 3/4									

NOTES: For General Specifications see Page D-950.01. For Finishes see Section "Z" Addendum.
MATERIAL: Steel, case hardened.
B^1, H^1, and T^1, show dimensions and number of threads for standard length screws only. (Part Numbers shown below double lines).
B^2, H^2, and T^2, show dimensions and number of threads for short length undercut head screws only. (Part Numbers shown above double lines).
Protrusion gaging values are shown above. For method, gage tolerances and gaging equipment see Section "Z" Addendum.

FORD MOTOR COMPANY
STANDARD PARTS

TAPPING SCREWS FLAT HEAD

SLOTTED TYPES B & BP

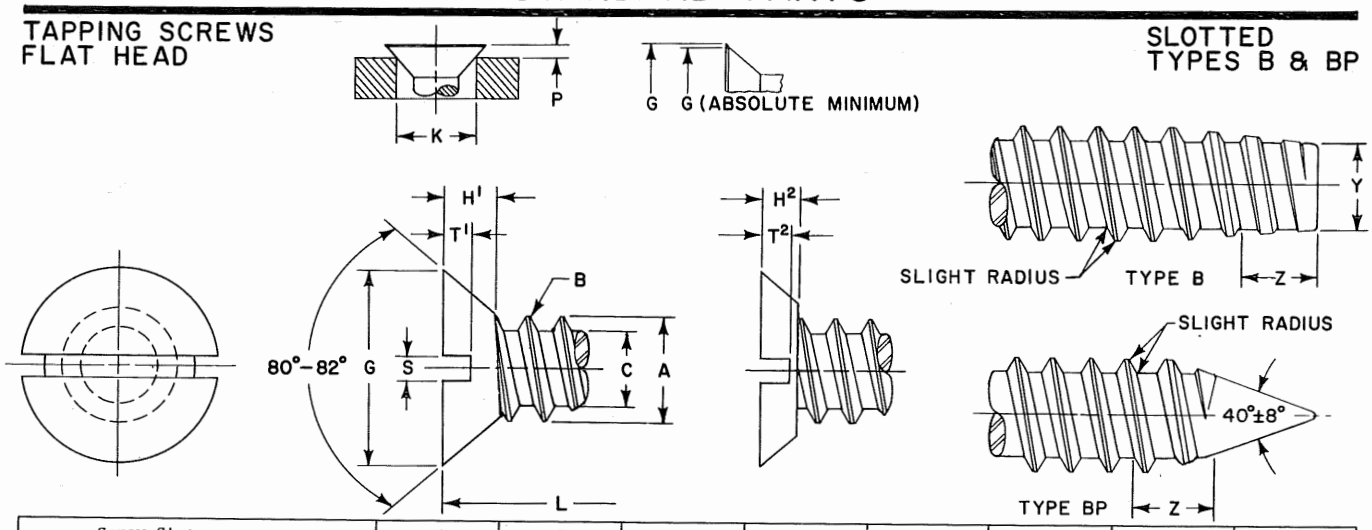

	Screw Size	4	5	6	7	8	10	12	1/4
B	Threads Per Inch	24	20	20	19	18	16	14	14
A	Major Dia. of Thread	.114 .110	.130 .126	.139 .135	.154 .149	.166 .161	.189 .183	.215 .209	.246 .240
C	Minor Dia. of Thread	.086 .082	.094 .090	.104 .099	.115 .109	.122 .116	.141 .135	.164 .157	.192 .185
G	Head Dia. (Max. Sharp) (Min. Sharp) (Abs. Min.)	.225 .207 .195	.252 .232 .220	.279 .257 .244	.305 .283 .268	.332 .308 .292	.385 .359 .340	.438 .410 .389	.507 .477 .452
K	Gaging Diameter	.172	.196	.220	.243	.267	.313	.362	.424
P	Protrusion Above Gaging Dia.	.032 .019	.034 .020	.036 .021	.037 .022	.039 .023	.042 .025	.045 .027	.050 .029
H¹	Head Height (Ref.)	.067	.075	.083	.091	.100	.116	.132	.153
H²	Head Height	.047 .038	.053 .043	.059 .048	.064 .053	.070 .058	.081 .068	.092 .078	.107 .092
S	Slot Width	.039 .031	.043 .035	.048 .039	.048 .039	.054 .045	.060 .050	.067 .056	.075 .064
T¹	Slot Depth	.030 .020	.034 .022	.038 .024	.041 .027	.045 .029	.053 .034	.060 .039	.070 .046
T²	Slot Depth	.022 .014	.024 .016	.027 .017	.030 .019	.032 .021	.037 .024	.043 .028	.050 .032
Y	Point Diameter	.079 .074	.087 .082	.095 .089	.105 .099	.112 .106	.130 .123	.152 .145	.179 .171
L	LENGTH	FORD PART NUMBERS					TYPE B		
1/4		33035-S	33036-S	33037-S	33038-S				
3/8		33042-S	33043-S	33044-S	33045-S	33046-S	33047-S	33048-S	
1/2		33049-S	33050-S	33051-S	33052-S	33053-S	33054-S	33055-S	31501-S
5/8		33056-S	33057-S	33058-S	33059-S	33060-S	33061-S	33062-S	31502-S
3/4		33063-S	33064-S	33065-S	33066-S	33067-S	33068-S	33069-S	33070-S
7/8					33072-S	33073-S	33074-S	33075-S	33076-S
1					33077-S	33078-S	33079-S	33080-S	33081-S
1 1/4					33082-S	33083-S	33084-S	33085-S	33086-S
1 1/2						33087-S	33088-S	33089-S	33090-S
1 3/4						33091-S	33092-S	33093-S	33094-S
L	LENGTH	FORD PART NUMBERS					TYPE BP		
1/4		33295-S							
3/8		33302-S	33303-S	33304-S	33305-S	33306-S			
1/2		33309-S	33310-S	33311-S	33312-S	33313-S	33314-S	33315-S	31531-S
5/8		33316-S	33317-S	33318-S	33319-S	33320-S	33321-S	33322-S	31532-S
3/4		33323-S	33324-S	33325-S	33326-S	33327-S	33328-S	33329-S	33330-S
7/8				33331-S	33332-S	33333-S	33334-S	33335-S	33336-S
1					33337-S	33338-S	33339-S	33340-S	33341-S
1 1/4					33342-S	33343-S	33344-S	33345-S	33346-S
1 1/2						33347-S	33348-S	33349-S	33350-S
1 3/4						33351-S	33352-S	33353-S	33354-S

NOTES: For General Specifications see Page D-950.01. For Finishes see Section "Z" Addendum.
MATERIAL: Steel, case hardened.
H^1, and T^1 show dimensions for standard length screws only. (Part Numbers shown below double line).
H^2, and T^2 show dimensions for short length undercut head screws only. (Part Numbers shown above double line).
Screw lengths greater than "short length" series (Part Numbers shown below double line) shall have a taper length "Z" of 2- to 2-1/2 times the pitch distance. (See General Specifications).
Short length undercut head screws (Part Numbers shown above double line) shall have a taper length "Z" of 1-1/2 to 2- times the pitch distance. (See General Specifications).
Type BP short length screws (Part Numbers shown above double line) are impractical to manufacture.
Protrusion gaging values are shown above. For method, gage tolerances, and gaging equipment see Section "Z" Addendum.

FORD MOTOR COMPANY
STANDARD PARTS

TAPPING SCREWS
FLAT HEAD

SLOTTED
TYPE C

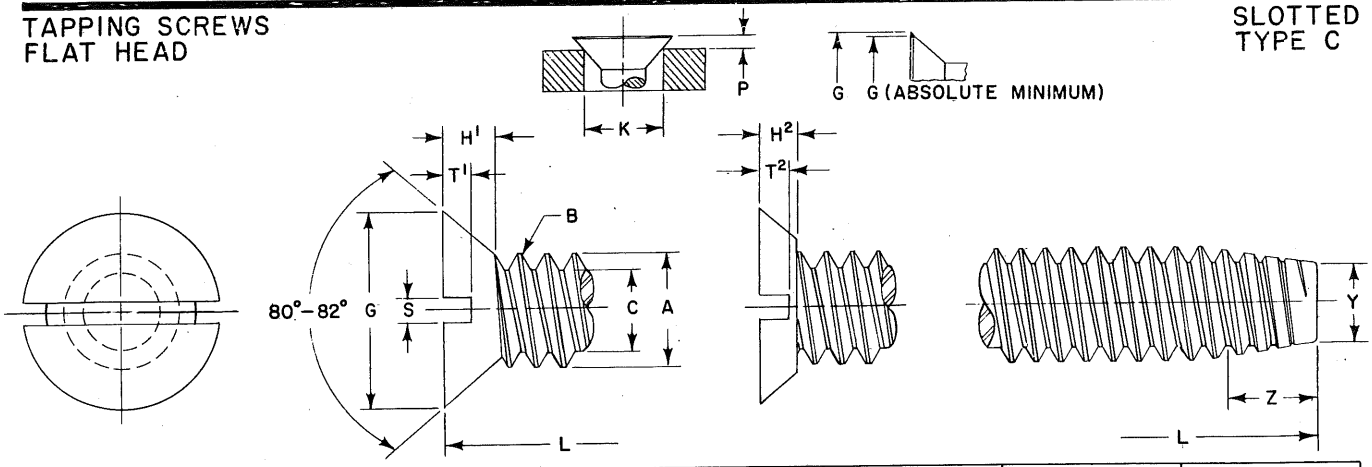

	Screw Size	6	8	10		12	1/4		5/16		3/8	
B	Threads Per Inch	32	32	24	32	24	20	28	18	24	16	24
A	Major Dia. of Thread	.1380 .1326	.1640 .1586	.1900 .1834	.1900 .1846	.2160 .2094	.2500 .2428	.2500 .2438	.3125 .3043	.3125 .3059	.3750 .3660	.3750 .3684
C	Minor Dia. of Thread (Max.)	.0997	.1257	.1389	.1517	.1649	.1887	.2062	.2443	.2614	.2983	.3239
G	Head Dia. (Max. Sharp) (Min. Sharp) (Abs. Min.)	.279 .257 .244	.332 .308 .292	.385 .359 .340	.385 .359 .340	.438 .410 .389	.507 .477 .452	.507 .477 .452	.635 .600 .568	.635 .600 .568	.762 .722 .685	.762 .722 .685
K	Gaging Diameter	.220	.267	.313	.313	.362	.424	.424	.539	.539	.653	.653
P	Protrusion Above Gaging Dia.	.036 .021	.039 .023	.042 .025	.042 .025	.045 .027	.050 .029	.050 .029	.057 .034	.057 .034	.065 .039	.065 .039
H¹	Head Height (Ref.)	.083	.100	.116	.116	.132	.153	.153	.191	.191	.230	.230
H²	Head Height	.059 .048	.070 .058	.081 .068	.081 .068	.092 .078	.107 .092	.107 .092	.134 .116	.134 .116	.161 .140	.161 .140
S	Slot Width	.048 .039	.054 .045	.060 .050	.060 .050	.067 .056	.075 .064	.075 .064	.084 .072	.084 .072	.094 .081	.094 .081
T¹	Slot Depth	.038 .024	.045 .029	.053 .034	.053 .034	.060 .039	.070 .046	.070 .046	.088 .058	.088 .058	.106 .070	.106 .070
T²	Slot Depth	.027 .017	.032 .021	.037 .024	.037 .024	.043 .028	.050 .032	.050 .032	.062 .041	.062 .041	.075 .049	.075 .049
Y	Point Diameter	.106 .095	.132 .121	.147 .133	.158 .147	.173 .159	.198 .181	.213 .201	.255 .236	.269 .255	.310 .289	.332 .318
L	LENGTH	FORD PART NUMBERS										
1/4		40760-S	40761-S									
3/8		40773-S	40774-S	40775-S	40776-S	40777-S	40778-S	40779-S				
1/2		40786-S	40787-S	40788-S	40789-S	40790-S	40791-S	40792-S	40793-S	40794-S	40795-S	40796-S
5/8		40799-S	40800-S	40801-S	40802-S	40803-S	40804-S	40805-S	40806-S	40807-S	40808-S	40809-S
3/4 7/8		40812-S 40825-S	40813-S 40826-S	40814-S 40827-S	40815-S 40828-S	40816-S 40829-S	40817-S 40830-S	40818-S 40831-S	40819-S 40832-S	40820-S 40833-S	40821-S 40834-S	40822-S 40835-S
1 1 1/4 1 1/2 1 3/4		40838-S 40851-S 40864-S 40877-S	40839-S 40852-S 40865-S 40878-S	40840-S 40853-S 40866-S 40879-S	40841-S 40854-S 40867-S 40880-S	40842-S 40855-S 40868-S 40881-S	40843-S 40856-S 40869-S 40882-S	40844-S 40857-S 40870-S 40883-S	40845-S 40858-S 40871-S 40884-S	40846-S 40859-S 40872-S 40885-S	40847-S 40860-S 40873-S 40886-S	40848-S 40861-S 40874-S 40887-S

NOTES: For General Specifications see Page D-950.01. For Finishes see Section "Z" Addendum.
MATERIAL: Steel, case hardened.
H^1, and T^1 show dimensions for standard length screws only. (Part Numbers shown below solid line).
H^2, and T^2 show dimensions for short length undercut head screws only. (Part Numbers shown above solid line).
Screws longer than 8 pitches in length (Part Numbers shown below double line) shall have a taper length "Z" of 3-1/2 to 4-1/2 times the pitch distance. (See General Specifications).
Screws 8 pitches or shorter in length (Part Numbers shown above double line) shall have a taper length "Z" of 2-1/2 to 3-1/2 times the pitch distance. (See General Specifications).
Protrusion gaging values are shown above. For method, gage tolerances, and gaging equipment see Section "Z" Addendum.

FORD MOTOR COMPANY
STANDARD PARTS

TAPPING SCREWS
FLAT HEAD

SLOTTED
TYPES D, F, & G

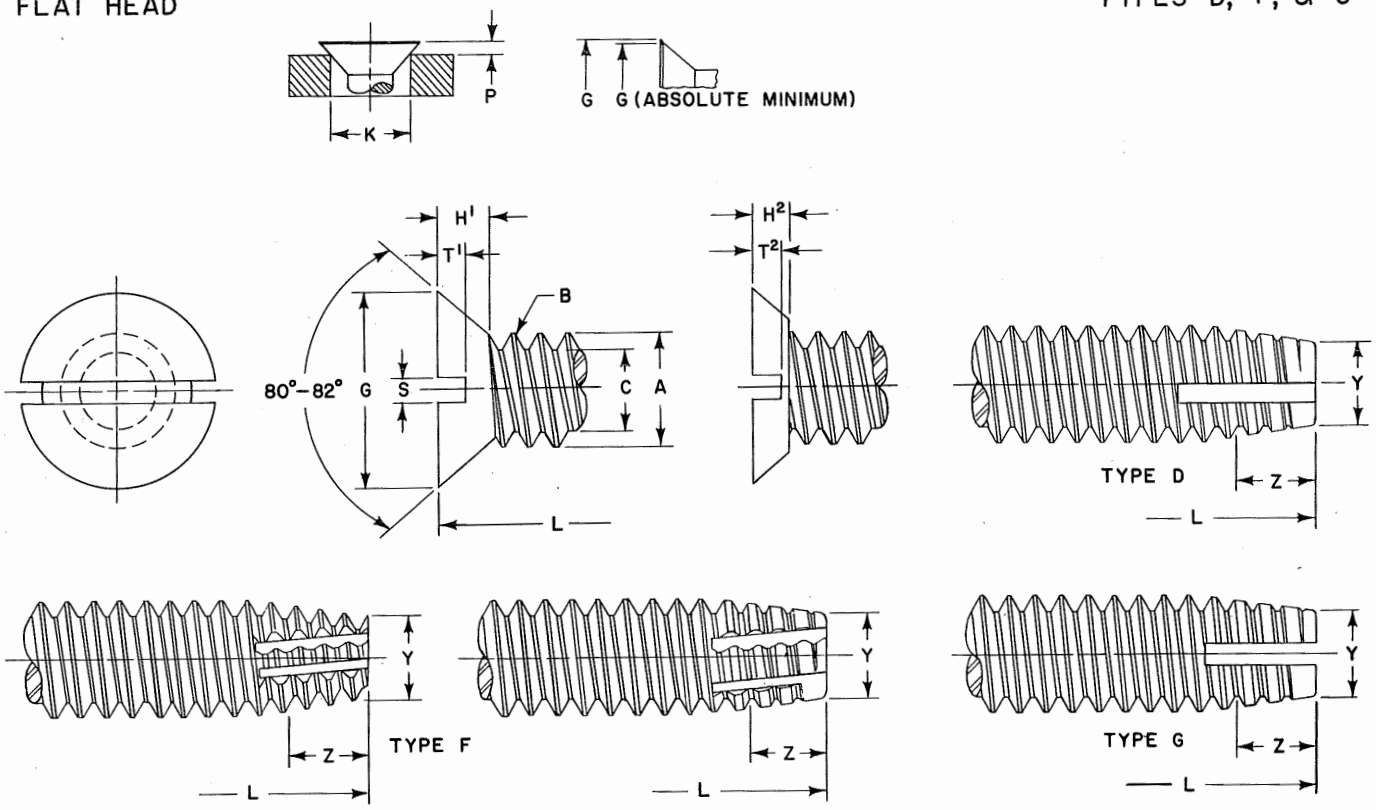

	Screw Size	6	8	10		12	1/4		5/16		3/8	
B	Threads Per Inch	32	32	24	32	24	20	28	18	24	16	24
A	Major Dia. of Thread	.1380 .1326	.1640 .1586	.1900 .1834	.1900 .1846	.2160 .2094	.2500 .2428	.2500 .2438	.3125 .3043	.3125 .3059	.3750 .3660	.3750 .3684
C	Minor Dia. of Thread (Max.)	.0997	.1257	.1389	.1517	.1649	.1887	.2062	.2443	.2614	.2983	.3239
G	Head Dia. (Max. Sharp) (Min. Sharp) (Abs. Min.)	.279 .257 .244	.332 .308 .292	.385 .359 .340	.385 .359 .340	.438 .410 .389	.507 .477 .452	.507 .477 .452	.635 .600 .568	.635 .600 .568	.762 .722 .685	.762 .722 .685
K	Gaging Diameter	.220	.267	.313	.313	.362	.424	.424	.539	.539	.653	.653
P	Protrusion Above Gaging Dia.	.036 .021	.039 .023	.042 .025	.042 .025	.045 .027	.050 .029	.050 .029	.057 .034	.057 .034	.065 .039	.065 .039
H'	Head Height (Ref.)	.083	.100	.116	.116	.132	.153	.153	.191	.191	.230	.230
H²	Head Height	.059 .048	.070 .058	.081 .068	.081 .068	.092 .078	.107 .092	.107 .092	.134 .116	.134 .116	.161 .140	.161 .140
S	Slot Width	.048 .039	.054 .045	.060 .050	.060 .050	.067 .056	.075 .064	.075 .064	.084 .072	.084 .072	.094 .081	.094 .081
T'	Slot Depth	.038 .024	.045 .029	.053 .034	.053 .034	.060 .039	.070 .046	.070 .046	.088 .058	.088 .058	.106 .070	.106 .070
T²	Slot Depth	.027 .017	.032 .021	.037 .024	.037 .024	.043 .028	.050 .032	.050 .032	.062 .041	.062 .041	.075 .049	.075 .049
Y	Point Diameter	.106 .095	.132 .121	.147 .133	.158 .147	.173 .159	.198 .181	.213 .201	.255 .236	.269 .255	.310 .289	.332 .318
L	LENGTH	FORD PART NUMBERS										
1/4		41800-S	41801-S									
3/8		41813-S	41814-S	41815-S	41816-S	41817-S	41818-S	41819-S				
1/2		41826-S	41827-S	41828-S	41829-S	41830-S	41831-S	41832-S	41833-S	41834-S	41835-S	41836-S
5/8		41839-S	41840-S	41841-S	41842-S	41843-S	41844-S	41845-S	41846-S	41847-S	41848-S	41849-S
3/4		41852-S	41853-S	41854-S	41855-S	41856-S	41857-S	41858-S	41859-S	41860-S	41861-S	41862-S
7/8		41865-S	41866-S	41867-S	41868-S	41869-S	41870-S	41871-S	41872-S	41873-S	41874-S	41875-S
1		41878-S	41879-S	41880-S	41881-S	41882-S	41883-S	41884-S	41885-S	41886-S	41887-S	41888-S
1 1/4		41891-S	41892-S	41893-S	41894-S	41895-S	41896-S	41897-S	41898-S	41899-S	41900-S	41901-S
1 1/2		41904-S	41905-S	41906-S	41907-S	41908-S	41909-S	41910-S	41911-S	41912-S	41913-S	41914-S
1 3/4		41917-S	41918-S	41919-S	41920-S	41921-S	41922-S	41923-S	41924-S	41925-S	41926-S	41927-S

NOTES: For General Specifications see Page D-950.01. For Finishes see Section "Z" Addendum.
MATERIAL: Steel, case hardened.
H^1, and T^1 show dimensions for standard length screws only. (Part Numbers shown below solid line).
H^2, and T^2 show dimensions for short length undercut head screws only. (Part Numbers shown above solid line).
Screws longer than 8 pitches in length (Part Numbers shown below double line) shall have a taper length "Z" of 3-1/2 to 4-1/2 times the pitch distance. (See General Specifications).
Screws 8 pitches or shorter in length (Part Numbers shown above double line) shall have a taper length "Z" of 2-1/2 to 3-1/2 times the pitch distance. (See General Specifications).
Protrusion gaging values are shown above. For method, gage tolerances, and gaging equipment see Section "Z" Addendum.

FORD MOTOR COMPANY
STANDARD PARTS

TAPPING SCREWS
FLAT HEAD

CROSS RECESSED
TYPE A

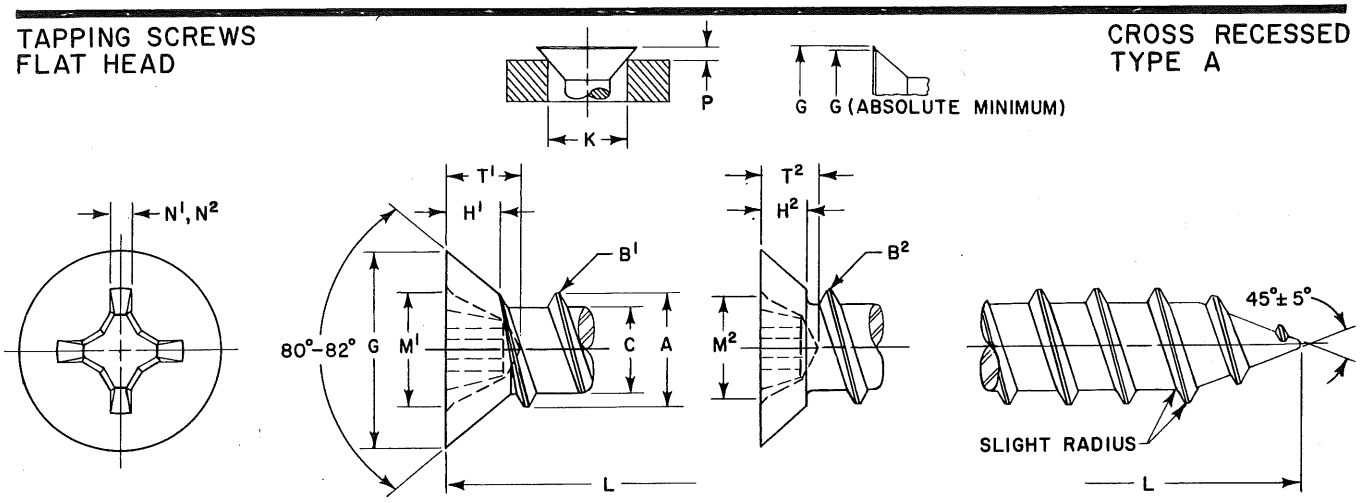

Screw Size		4	5	6	7	8	10	12	14
B^1	Threads per Inch	24	20	18	16	15	12	11	10
B^2	Threads per Inch	24	20	20	19	18	16	14	14
A	Major Dia. of Thread	.114 .110	.130 .126	.141 .136	.158 .152	.168 .162	.194 .188	.221 .215	.254 .248
C	Minor Dia. of Thread	.083 .078	.095 .090	.102 .096	.114 .108	.123 .116	.133 .126	.162 .155	.185 .178
G	Head Dia. (Max. Sharp) (Min. Sharp) (Abs. Min.)	.225 .207 .195	.252 .232 .220	.279 .257 .244	.305 .283 .268	.332 .308 .292	.385 .359 .340	.438 .410 .389	.491 .461 .437
K	Gaging Diameter	.172	.196	.220	.243	.267	.313	.362	.410
P	Protrusion Above Gaging Dia.	.032 .019	.034 .020	.036 .021	.037 .022	.039 .023	.042 .025	.045 .027	.049 .029
H^1	Head Height (Ref.)	.067	.075	.083	.091	.100	.116	.132	.148
H^2	Head Height	.047 .038	.053 .043	.059 .048	.064 .053	.070 .058	.081 .068	.092 .078	.104 .088
M^1	Recess Diameter	.128 .115	.154 .141	.174 .161	.182 .169	.189 .176	.204 .191	.268 .255	.283 .270
M^2	Recess Diameter	.116 .103	.128 .115	.149 .136	.154 .141	.174 .161	.189 .176	.233 .220	.250 .237
T^1	Recess Depth	.089 .073	.086 .063	.106 .083	.114 .091	.121 .098	.136 .113	.156 .133	.171 .148
T^2	Recess Depth	.078 .062	.089 .073	.078 .055	.086 .063	.106 .083	.121 .098	.121 .101	.136 .116
N^1	Recess Width	.018	.027	.029	.030	.031	.032	.035	.036
N^2	Recess Width	.018	.018	.025	.027	.029	.031	.030	.032
	Driver Size	1	2(a)	2	2	2	2	3	3
	Penetration Gaging Depth	.082 .066	.075 .052	.095 .072	.103 .080	.110 .087	.125 .102	.139 .116	.154 .131
	Penetration Gaging Depth	.071 .055	.082 .066	.064 .041	.075 .052	.095 .072	.110 .087	.104 .081	.119 .096
L	LENGTH	FORD PART NUMBERS							
1/4		52000-S							
3/8		52003-S	52004-S	52005-S	52006-S	52007-S			
1/2		52008-S	52009-S	52010-S	52011-S	52012-S	52013-S	52014-S	
5/8				52015-S	52016-S	52017-S	52018-S	52019-S	
3/4				52020-S	52021-S	52022-S	52023-S	52024-S	52025-S
7/8				52026-S	52027-S	52028-S	52029-S	52030-S	52031-S
1				52032-S	52033-S	52034-S	52035-S	52036-S	52037-S
1 1/4						52038-S	52039-S	52040-S	52041-S
1 1/2							52042-S	52043-S	52044-S
1 3/4							52045-S	52046-S	52047-S

NOTES: (a) Driver Size No. 1 for short length screws.
For General Specifications see Page D-950.01. For Finishes see Section "Z" Addendum.
MATERIAL: Steel - case hardened.
B^1, H^1, M^1, T^1, and N^1, show dimensions and number of threads for standard length screws only. (Part Numbers shown below double lines.)
B^2, H^2, M^2, T^2, and N^2, show dimensions and number of threads for short length undercut head screws only. (Part Numbers shown above double lines.)
Recess penetration and protrusion gaging values are shown above. For method, gage tolerances and gaging equipment, see Section "Z" Addendum.

FORD MOTOR COMPANY
STANDARD PARTS

TAPPING SCREWS FLAT HEAD

CROSS RECESSED TYPES B & BP

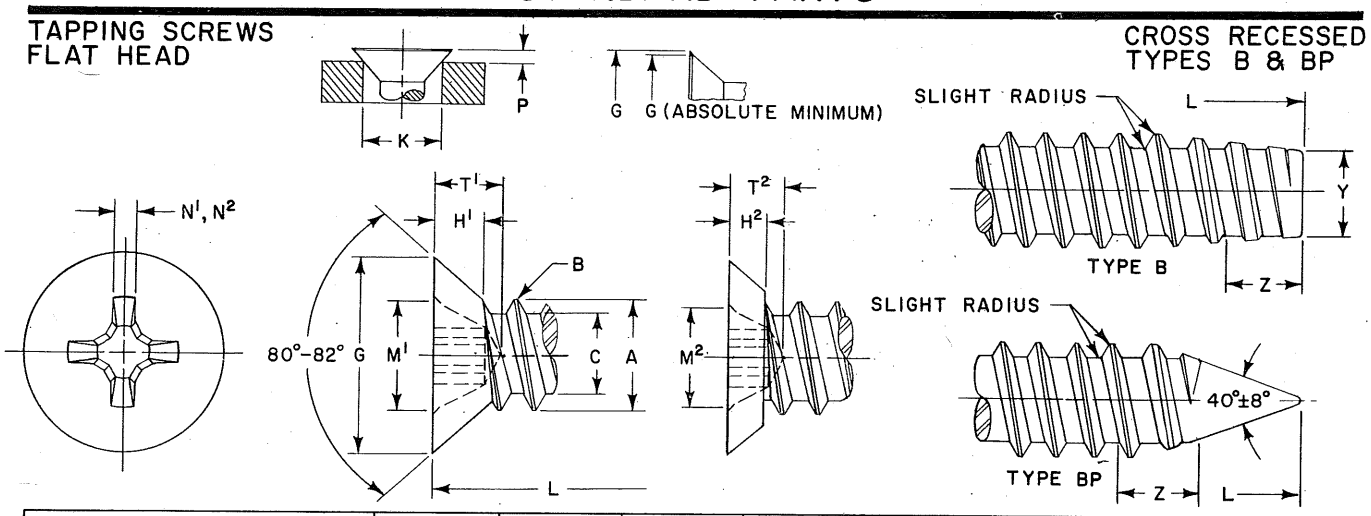

	Screw Size	4	5	6	7	8	10	12	1/4
B	Threads Per Inch	24	20	20	19	18	16	14	14
A	Major Dia. of Thread	.114 .110	.130 .126	.139 .135	.154 .149	.166 .161	.189 .183	.215 .209	.246 .240
C	Minor Dia. of Thread	.086 .082	.094 .090	.104 .099	.115 .109	.122 .116	.141 .135	.164 .157	.192 .185
G	Head Dia. (Max. Sharp) (Min. Sharp) (Abs. Min.)	.225 .207 .195	.252 .232 .220	.279 .257 .244	.305 .283 .268	.332 .308 .292	.385 .359 .340	.438 .410 .389	.507 .477 .452
K	Gaging Diameter	.172	.196	.220	.243	.267	.313	.362	.424
P	Protrusion Above Gaging Dia.	.032 .019	.034 .020	.036 .021	.037 .022	.039 .023	.042 .025	.045 .027	.050 .029
H¹	Head Height (Ref.)	.067	.075	.083	.091	.100	.116	.132	.153
H²	Head Height	.047 .038	.053 .043	.059 .048	.064 .053	.070 .058	.081 .068	.092 .078	.107 .092
M¹	Recess Diameter	.128 .115	.154 .141	.174 .161	.182 .169	.189 .176	.204 .191	.268 .255	.283 .270
M²	Recess Diameter	.116 .103	.128 .115	.149 .136	.154 .141	.174 .161	.189 .176	.233 .220	.250 .237
T¹	Recess Depth	.089 .073	.086 .063	.106 .083	.114 .091	.121 .098	.136 .113	.156 .133	.171 .148
T²	Recess Depth	.078 .062	.089 .073	.078 .055	.086 .063	.106 .083	.121 .098	.121 .101	.136 .116
N¹	Recess Width	.018	.027	.029	.030	.031	.032	.035	.036
N²	Recess Width	.018	.018	.025	.027	.029	.031	.030	.032
	Driver Size	1	2(a)	2	2	2	2	3	3
	Penetration Gaging Depth	.082 .066	.075 .052	.095 .072	.103 .080	.110 .087	.125 .102	.139 .116	.154 .131
	Penetration Gaging Depth	.071 .055	.082 .066	.064 .041	.075 .052	.095 .072	.110 .087	.104 .081	.119 .096
Y	Point Diameter	.079 .074	.087 .082	.095 .089	.105 .099	.112 .106	.130 .123	.152 .145	.179 .171
L	LENGTH	FORD PART NUMBERS					TYPE B		
1/4		52050-S	52051-S	52052-S					
3/8		52053-S	52054-S	52055-S	52056-S	52057-S	52058-S		
1/2		52059-S	52060-S	52061-S	52062-S	52063-S	52064-S	52065-S	52066-S
5/8		52067-S	52068-S	52069-S	52070-S	52071-S	52072-S	52073-S	52074-S
3/4		52075-S	52076-S	52077-S	52078-S	52079-S	52080-S	52081-S	52082-S
7/8				52083-S	52084-S	52085-S	52086-S	52087-S	52088-S
1				52089-S	52090-S	52091-S	52092-S	52093-S	52094-S
1 1/4						52095-S	52096-S	52097-S	52098-S
1 1/2						52099-S	52100-S	52101-S	52102-S
1 3/4							52103-S	52104-S	52105-S
L	LENGTH	FORD PART NUMBERS					TYPE BP		
1/4		52111-S							
3/8		52114-S	52115-S	52116-S	52117-S	52118-S			
1/2		52119-S	52120-S	52121-S	52122-S	52123-S	52124-S	52125-S	
5/8				52126-S	52127-S	52128-S	52129-S	52130-S	
3/4				52131-S	52132-S	52133-S	52134-S	52135-S	52136-S
7/8				52137-S	52138-S	52139-S	52140-S	52141-S	52142-S
1				52143-S	52144-S	52145-S	52146-S	52147-S	52148-S
1 1/4						52149-S	52150-S	52151-S	52152-S
1 1/2							52153-S	52154-S	52155-S
1 3/4							52156-S	52157-S	52158-S

NOTES: (a) Driver Size No. 1 for short length screws.
For General Specifications see Page D-950.01. For Finishes see Section "Z" Addendum.
MATERIAL: Steel - case hardened.
H^1, M^1, T^1, and N^1, show dimensions for standard length screws only. (Part Numbers shown below double line.)
H^2, M^2, T^2, and N^2, show dimensions for short length undercut head screws only. (Part Numbers shown above double line.)
Screw lengths greater than short length series (Part Numbers shown below double line) shall have a taper length "Z" of 2- to 2-1/2 times the pitch distance. Short length undercut head screws (Part Numbers shown above double line) shall have a taper length "Z" of 1-1/2 to 2- times the pitch distance. (See General Specifications.)
Type BP short length screws (Part Numbers shown above double line) are impractical to manufacture. Recess penetration and protrusion gaging values are shown above. For method, gage tolerances, and gaging equipment see Section "Z" Addendum.

FORD MOTOR COMPANY
STANDARD PARTS

TAPPING SCREWS
FLAT HEAD

CROSS RECESSED
TYPE C

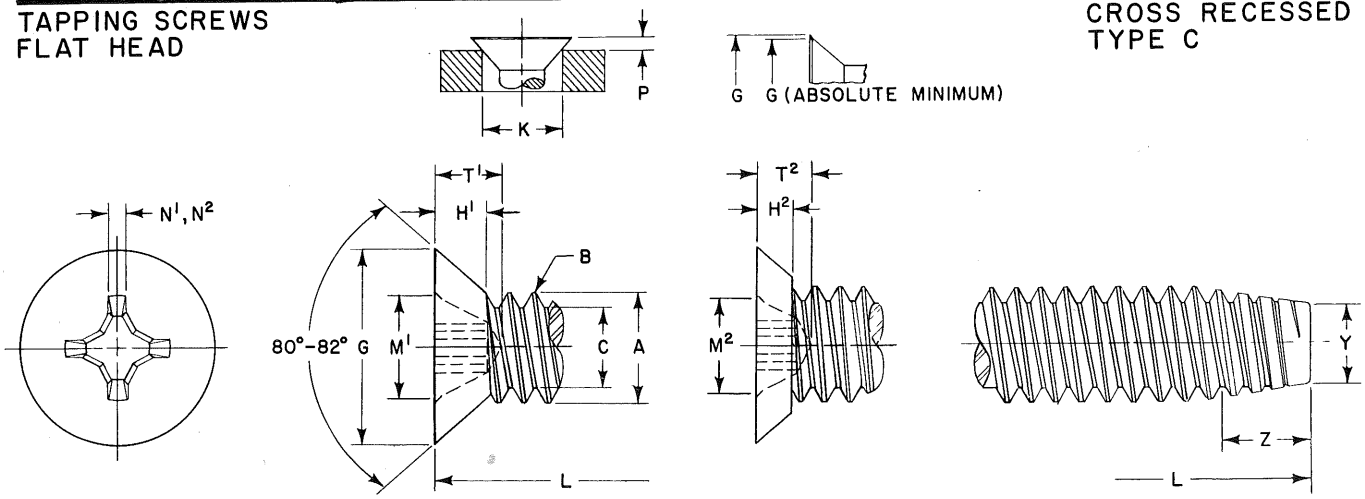

	Screw Size	6	8	10		12	1/4		5/16		3/8	
B	Threads Per Inch	32	32	24	32	24	20	28	18	24	16	24
A	Major Dia. of Thread	.1380 .1326	.1640 .1586	.1900 .1834	.1900 .1846	.2160 .2094	.2500 .2428	.2500 .2438	.3125 .3043	.3125 .3059	.3750 .3660	.3750 .3684
C	Minor Dia. of Thread (Max.)	.0997	.1257	.1389	.1517	.1649	.1887	.2062	.2443	.2614	.2983	.3239
G	Head Dia. (Max. Sharp) (Min. Sharp) (Abs. Min.)	.279 .257 .244	.332 .308 .292	.385 .359 .340	.385 .359 .340	.438 .410 .389	.507 .477 .452	.507 .477 .452	.635 .600 .568	.635 .600 .568	.762 .722 .685	.762 .722 .685
K	Gaging Diameter	.220	.267	.313	.313	.362	.424	.424	.539	.539	.653	.653
P	Protrusion Above Gaging Dia.	.036 .021	.039 .023	.042 .025	.042 .025	.045 .027	.050 .029	.050 .029	.057 .034	.057 .034	.065 .039	.065 .039
H¹	Head Height	.083	.100	.116	.116	.132	.153	.153	.191	.191	.230	.230
H²	Head Height	.059 .048	.070 .058	.081 .068	.081 .068	.092 .078	.107 .092	.107 .092	.134 .116	.134 .116	.161 .140	.161 .140
M¹	Recess Diameter	.174 .161	.189 .176	.204 .191	.204 .191	.268 .255	.283 .270	.283 .270	.365 .352	.365 .352	.393 .380	.393 .380
M²	Recess Diameter	.149 .136	.174 .161	.189 .176	.189 .176	.233 .220	.250 .237	.250 .237	.317 .304	.317 .304	.365 .352	.365 .352
T¹	Recess Depth	.106 .083	.121 .098	.136 .113	.136 .113	.156 .133	.171 .148	.171 .148	.216 .194	.216 .194	.245 .223	.245 .223
T²	Recess Depth	.078 .055	.106 .083	.121 .098	.121 .098	.121 .101	.136 .116	.136 .116	.168 .146	.168 .146	.216 .194	.216 .194
N¹	Recess Width	.029	.031	.032	.032	.035	.036	.036	.061	.061	.065	.065
N²	Recess Width	.025	.029	.031	.031	.030	.032	.032	.053	.053	.061	.061
	Driver Size	2	2	2	2	3	3	3	4	4	4	4
	Penetration Gaging Depth	.095 .072	.110 .087	.125 .102	.125 .102	.139 .116	.154 .131	.154 .131	.196 .174	.196 .174	.225 .203	.225 .203
	Penetration Gaging Depth	.064 .041	.095 .072	.110 .087	.110 .087	.104 .081	.119 .096	.119 .096	.148 .126	.148 .126	.196 .174	.196 .174
Y	Point Diameter	.106 .095	.132 .121	.147 .133	.158 .147	.173 .159	.198 .181	.213 .201	.255 .236	.269 .255	.310 .289	.332 .318
L	LENGTH	FORD PART NUMBERS										
1/4		51145-S	51146-S									
3/8		51147-S	51148-S	51149-S	51150-S	51151-S						
1/2		51152-S	51153-S	51154-S	51155-S	51156-S	51157-S	51158-S	51159-S			
5/8		51160-S	51161-S	51162-S	51163-S	51164-S	51165-S	51166-S	51167-S	51168-S	51169-S	51170-S
3/4		51171-S	51172-S	51173-S	51174-S	51175-S	51176-S	51177-S	51178-S	51179-S	51180-S	51181-S
7/8		51182-S	51183-S	51184-S	51185-S	51186-S	51187-S	51188-S	51189-S	51190-S	51191-S	51192-S
1		51193-S	51194-S	51195-S	51196-S	51197-S	51198-S	51199-S	51200-S	51201-S	51202-S	51203-S
1 1/4		51204-S	51205-S	51206-S	51207-S	51208-S	51209-S	51210-S	51211-S	51212-S	51213-S	51214-S
1 1/2		51215-S	51216-S	51217-S	51218-S	51219-S	51220-S	51221-S	51222-S	51223-S	51224-S	51225-S
1 3/4			51226-S	51227-S	51228-S	51229-S	51230-S	51231-S	51232-S	51233-S	51234-S	51235-S

NOTES: For General Specifications see Page D-950.01. For Finishes see Section "Z" Addendum.
MATERIAL: Steel, case hardened.
H^1, M^1, T^1, and N^1 show dimensions for standard length screws only. (Part Numbers shown below solid line).
H^2, M^2, T^2, and N^2 show dimensions for short length undercut head screws only. (Part Numbers shown above solid line).
Screws longer than 8 pitches in length (Part Numbers shown below double line) shall have a taper length "Z" of 3-1/2 to 4-1/2 times the pitch distance. (See General Specifications).
Screws 8 pitches or shorter in length (Part Numbers shown above double line) shall have a taper length "Z" of 2-1/2 to 3-1/2 times the pitch distance. (See General Specifications).
Recess penetration and protrusion gaging values are shown above. For method, gage tolerances and gaging e uipment see Section "Z" Addendum.

FORD MOTOR COMPANY
STANDARD PARTS

TAPPING SCREWS
FLAT HEAD

CROSS RECESSED
TYPES D, F, & G

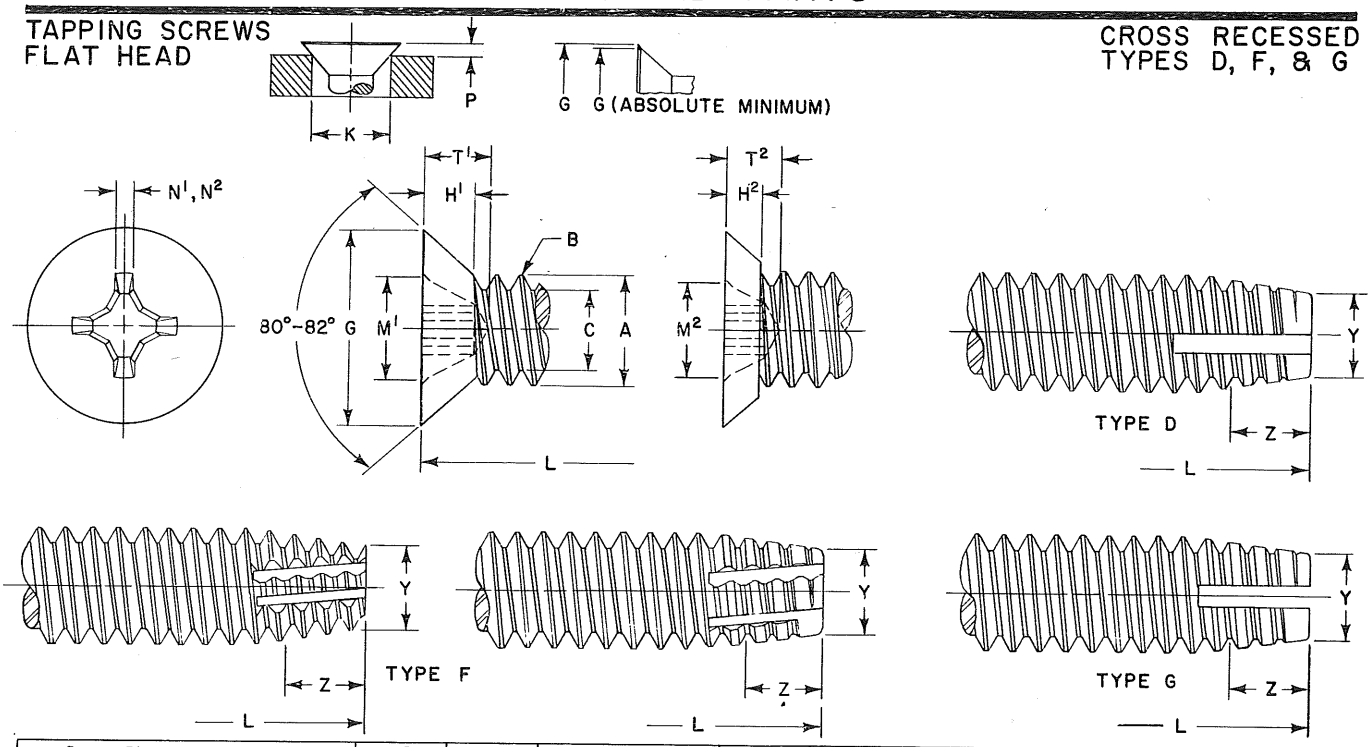

	Screw Size	6	8	10		12	1/4		5/16		3/8	
B	Threads Per Inch	32	32	24	32	24	20	28	18	24	16	24
A	Major Dia. of Thread	.1380 .1326	.1640 .1586	.1900 .1834	.1900 .1846	.2160 .2094	.2500 .2428	.2500 .2438	.3125 .3043	.3125 .3059	.3750 .3660	.3750 .3684
C	Minor Dia. of Thread (Max.)	.0997	.1257	.1389	.1517	.1649	.1887	.2062	.2443	.2614	.2983	.3239
G	Head Dia. (Max. Sharp) (Min. Sharp) (Abs. Min.)	.279 .257 .244	.332 .308 .292	.385 .359 .340	.385 .359 .340	.438 .410 .389	.507 .477 .452	.507 .477 .452	.635 .600 .568	.635 .600 .568	.762 .722 .685	.762 .722 .685
K	Gaging Diameter	.220	.267	.313	.313	.362	.424	.424	.539	.539	.653	.653
P	Protrusion Above Gaging Dia.	.036 .021	.039 .023	.042 .025	.042 .025	.045 .027	.050 .029	.050 .029	.057 .034	.057 .034	.065 .039	.065 .039
H¹	Head Height	.083	.100	.116	.116	.132	.153	.153	.191	.191	.230	.230
H²	Head Height	.059 .048	.070 .058	.081 .068	.081 .068	.092 .078	.107 .092	.107 .092	.134 .116	.134 .116	.161 .140	.161 .140
M¹	Recess Diameter	.174 .161	.189 .176	.204 .191	.204 .191	.268 .255	.283 .270	.283 .270	.365 .352	.365 .352	.393 .380	.393 .380
M²	Recess Diameter	.149 .136	.174 .161	.189 .176	.189 .176	.233 .220	.250 .237	.250 .237	.317 .304	.317 .304	.365 .352	.365 .352
T¹	Recess Depth	.106 .083	.121 .098	.136 .113	.136 .113	.156 .133	.171 .148	.171 .148	.216 .194	.216 .194	.245 .223	.245 .223
T²	Recess Depth	.078 .055	.106 .083	.121 .098	.121 .098	.121 .101	.136 .116	.136 .116	.168 .146	.168 .146	.216 .194	.216 .194
N¹	Recess Width	.029	.031	.032	.032	.035	.036	.036	.061	.061	.065	.065
N²	Recess Width	.025	.029	.031	.031	.030	.032	.032	.053	.053	.061	.061
	Driver Size	2	2	2	2	3	3	3	4	4	4	4
	Penetration Gaging Depth	.095 .072	.110 .087	.125 .102	.125 .102	.139 .116	.154 .131	.154 .131	.196 .174	.196 .174	.225 .203	.225 .203
	Penetration Gaging Depth	.064 .041	.095 .072	.110 .087	.110 .087	.104 .081	.119 .096	.119 .096	.148 .126	.148 .126	.196 .174	.196 .174
Y	Point Diameter	.106 .095	.132 .121	.147 .133	.158 .147	.173 .159	.198 .181	.213 .201	.255 .236	.269 .255	.310 .289	.332 .318
L	LENGTH	FORD PART NUMBERS										
	1/4	51050-S	51051-S									
	3/8	51052-S	51053-S	51054-S	51055-S	51056-S						
	1/2	51057-S	51058-S	51059-S	51060-S	51061-S	51062-S	51063-S	51064-S	51065-S		
	5/8	51066-S	51067-S	51068-S	51069-S	51070-S	51071-S	51072-S	51073-S	51074-S	51075-S	51076-S
	3/4	51077-S	51078-S	51079-S	51080-S	51081-S	51082-S	51083-S	51084-S	51085-S	51086-S	51087-S
	7/8	51088-S	51089-S	51090-S	51091-S	51092-S	51093-S	51094-S	51095-S	51096-S	51097-S	51098-S
	1	51099-S	51100-S	51101-S	51102-S	51103-S	51104-S	51105-S	51106-S	51107-S	51108-S	51109-S
	1 1/4	51110-S	51111-S	51112-S	51113-S	51114-S	51115-S	51116-S	51117-S	51118-S	51119-S	51120-S
	1 1/2	51121-S	51122-S	51123-S	51124-S	51125-S	51126-S	51127-S	51128-S	51129-S	51130-S	51131-S
	1 3/4		51132-S	51133-S	51134-S	51135-S	51136-S	51137-S	51138-S	51139-S	51140-S	51141-S

NOTES: For General Specifications see Page D-950.01. For Finishes see Section "Z" Addendum.
MATERIAL: Steel, case hardened.
H^1, M^1, T^1, and N^1 show dimensions for standard length screws only. (Part Numbers shown below solid line).
H^2, M^2, T^2, and N^2 show dimensions for short length undercut head screws only. (Part Numbers shown above solid line).
Screws longer than 8 pitches in length (Part Numbers shown below double line) shall have a taper length "Z" of 3-1/2 to 4-1/2 times the pitch distance. (See General Specifications).
Screws 8 pitches or shorter in length (Part Numbers shown above double line) shall have a taper length "Z" of 2-1/2 to 3-1/2 times the pitch distance. (See General Specifications).
Recess penetration and protrusion gaging values are shown above. For method, gage tolerances and gaging equipment see Section "Z" Addendum.

FORD MOTOR COMPANY
STANDARD PARTS

TAPPING SCREWS
FLAT TRIM HEAD

CROSS RECESSED
TYPE A

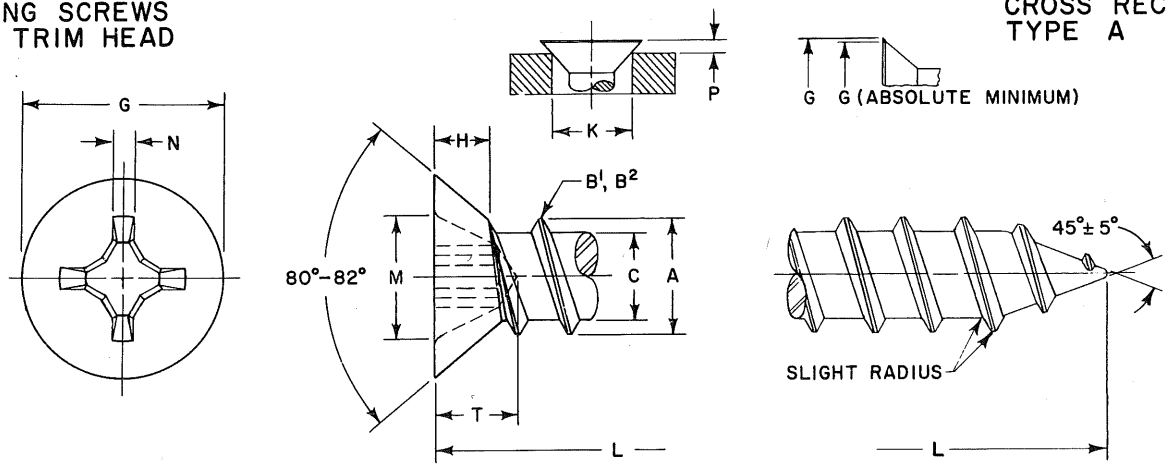

	Screw Size — Body	4	5	6		8		10	12		14	
	Head	3	4	4	5	5	6	8	8	10	10	12
B¹	Threads Per Inch	24	20	18	18	15	15	12	11	11	10	10
B²	Threads Per Inch	24	20	20	20	18	18	16	14	14	14	14
A	Major Dia. of Thread	.114 .110	.130 .126	.141 .136	.141 .136	.168 .162	.168 .162	.194 .188	.221 .215	.221 .215	.254 .248	.254 .248
C	Minor Dia. of Thread	.083 .078	.095 .090	.102 .096	.102 .096	.123 .116	.123 .116	.133 .126	.162 .155	.162 .155	.185 .178	.185 .178
G	Head Dia. (Max. Sharp) (Min. Sharp) (Abs. Min.)	.199 .181 .171	.225 .207 .195	.225 .207 .195	.252 .232 .220	.252 .232 .220	.279 .257 .244	.332 .308 .292	.332 .308 .292	.385 .359 .340	.385 .359 .340	.438 .410 .389
K	Gaging Diameter	.148	.172	.172	.196	.196	.220	.267	.267	.313	.313	.362
P	Protrusion Above Gaging Dia.	.031 .018	.032 .019	.032 .019	.034 .020	.034 .020	.036 .021	.039 .023	.039 .023	.042 .025	.042 .025	.045 .027
H	Head Height (Ref.)	.052	.060	.052	.068	.052	.069	.085	.069	.101	.080	.112
M	Recess Diameter	.107 .094	.128 .115	.128 .115	.154 .141	.164 .151	.182 .169	.189 .176	.198 .185	.204 .191	.204 .191	.268 .255
T	Recess Depth	.068 .052	.089 .073	.089 .073	.086 .063	.096 .073	.114 .091	.121 .098	.131 .105	.136 .113	.136 .113	.156 .133
N	Recess Width (Min.)	.018	.018	.018	.027	.029	.030	.031	.032	.032	.032	.035
	Driver Size	1	1	1	2	2	2	2	2	2	2	3
	Penetration Gaging Depth	.061 .045	.082 .066	.082 .066	.075 .052	.085 .062	.103 .080	.110 .087	.120 .097	.125 .102	.125 .102	.139 .116
L	LENGTH	FORD PART NUMBERS										
1/4		53409-S	53410-S	53411-S								
3/8		53412-S	53413-S	53414-S	53415-S	53416-S	53417-S	53418-S	53419-S			
1/2		53420-S	53421-S	53422-S	53423-S	53424-S	53425-S	53426-S	53427-S	53428-S	53429-S	53430-S
5/8		53431-S	53432-S	53433-S	53434-S	53435-S	53436-S	53437-S	53438-S	53439-S	53440-S	53441-S
3/4		53442-S	53443-S	53444-S	53445-S	53446-S	53447-S	53448-S	53449-S	53450-S	53451-S	53452-S
7/8		53453-S	53454-S	53455-S	53456-S	53457-S	53458-S	53459-S	53460-S	53461-S	53462-S	53463-S
1		53464-S	53465-S	53466-S	53467-S	53468-S	53469-S 53475-S 53481-S	53470-S 53476-S 53482-S 53487-S	53471-S 53477-S 53483-S 53488-S	53472-S 53478-S 53484-S 53489-S	53473-S 53479-S 53485-S 53490-S	53474-S 53480-S 53486-S 53491-S
1 1/4												
1 1/2												
1 3/4												

NOTES: For General Specifications see Page D-950.01. For Finishes see Section "Z" Addendum.
MATERIAL: Steel, case hardened.
B^1 shows number of threads for standard length screws only. (Part Numbers shown below double lines.)
B^2 shows number of threads for short length screws only. (Part Numbers shown above double lines.)
Recess penetration and protrusion gaging values are shown above. For method, gage tolerances and gaging equipment see Section "Z" Addendum.

FORD MOTOR COMPANY
STANDARD PARTS

TAPPING SCREWS
FLAT TRIM HEAD

CROSS RECESSED
TYPE C

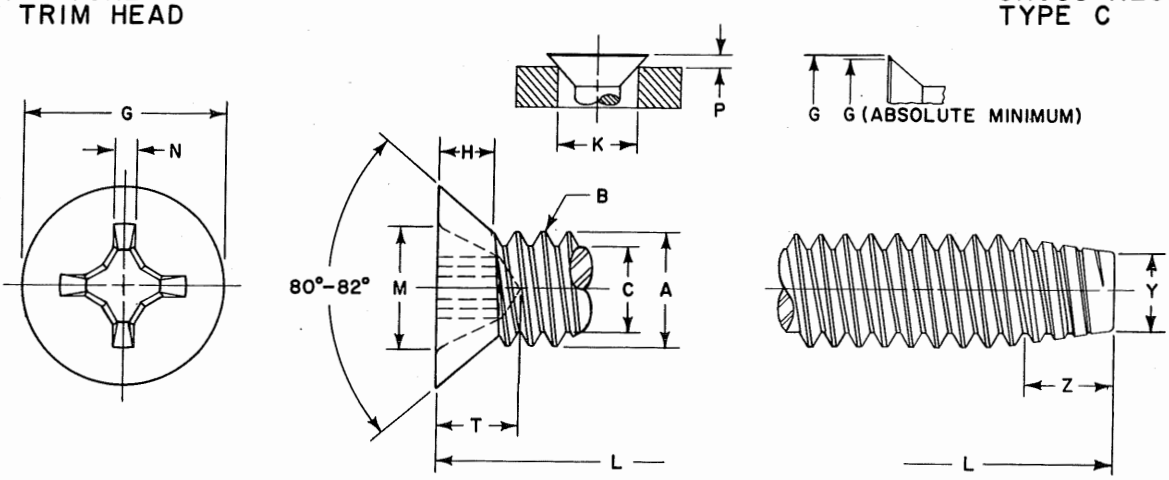

	Screw Size — Body	6		8		10		12	
	Screw Size — Head	4	5	5	6	8		8	10
B	Threads Per Inch	32	32	32	32	24	32	24	24
A	Major Dia. of Thread	.1380 .1326	.1380 .1326	.1640 .1586	.1640 .1586	.1900 .1834	.1900 .1846	.2160 .2094	.2160 .2094
C	Minor Dia. of Thread (Max.)	.0997	.0997	.1257	.1257	.1389	.1517	.1649	.1649
G	Head Dia. (Max. Sharp) (Min. Sharp) (Abs. Min.)	.225 .207 .195	.252 .232 .220	.252 .232 .220	.279 .257 .244	.332 .308 .292	.332 .308 .292	.332 .308 .292	.385 .359 .340
K	Gaging Diameter	.172	.196	.196	.220	.267	.267	.267	.313
P	Protrusion Above Gaging Dia.	.032 .019	.034 .020	.034 .020	.036 .021	.039 .023	.039 .023	.039 .023	.042 .025
H	Head Height (Ref.)	.052	.068	.052	.069	.085	.085	.069	.101
M	Recess Diameter	.128 .115	.154 .141	.164 .151	.182 .169	.189 .176	.189 .176	.198 .185	.204 .191
T	Recess Depth	.089 .073	.086 .063	.096 .073	.114 .091	.121 .098	.121 .098	.131 .105	.136 .113
N	Recess Width (Min.)	.018	.027	.029	.030	.031	.031	.032	.032
	Driver Size	1	2	2	2	2	2	2	2
	Penetration Gaging Depth	.082 .066	.075 .052	.085 .062	.103 .080	.110 .087	.110 .087	.120 .097	.125 .102
Y	Point Diameter	.106 .095	.106 .095	.132 .121	.132 .121	.147 .133	.158 .147	.173 .159	.173 .159
L	LENGTH	FORD PART NUMBERS							
	1/4	53492-S	53493-S	53494-S	53495-S	53496-S	53497-S	53498-S	
	3/8	53499-S	53500-S	53501-S	53502-S	53503-S	53504-S	53505-S	53506-S
	1/2 5/8 3/4 7/8	53507-S 53515-S 53523-S 53531-S	53508-S 53516-S 53524-S 53532-S	53509-S 53517-S 53525-S 53533-S	53510-S 53518-S 53526-S 53534-S	53511-S 53519-S 53527-S 53535-S	53512-S 53520-S 53528-S 53536-S	53513-S 53521-S 53529-S 53537-S	53514-S 53522-S 53530-S 53538-S
	1 1 1/4 1 1/2 1 3/4	53539-S 53547-S 53555-S	53540-S 53548-S 53556-S	53541-S 53549-S 53557-S	53542-S 53550-S 53558-S	53543-S 53551-S 53559-S 53563-S	53544-S 53552-S 53560-S 53564-S	53545-S 53553-S 53561-S 53565-S	53546-S 53554-S 53562-S 53566-S

NOTES: For General Specifications see Page D-950.01. For Finishes see Section "Z" Addendum.
MATERIAL: Steel, case hardened.
Screws longer than 8 pitches in length (Part Numbers shown below double lines) shall have a taper length "Z" of 3-1/2 to 4-1/2 times the pitch distance. (See General Specifications.)
Screws 8 pitches or shorter in length (Part Numbers shown above double lines) shall have a taper length "Z" of 2-1/2 to 3-1/2 times the pitch distance. (See General Specifications.)
Recess penetration and protrusion gaging values are shown above. For method, gage tolerances and gaging equipment see Section "Z" Addendum.

FORD MOTOR COMPANY
STANDARD PARTS

TAPPING SCREWS
FLAT TRIM HEAD

CROSS RECESSED
TYPE C

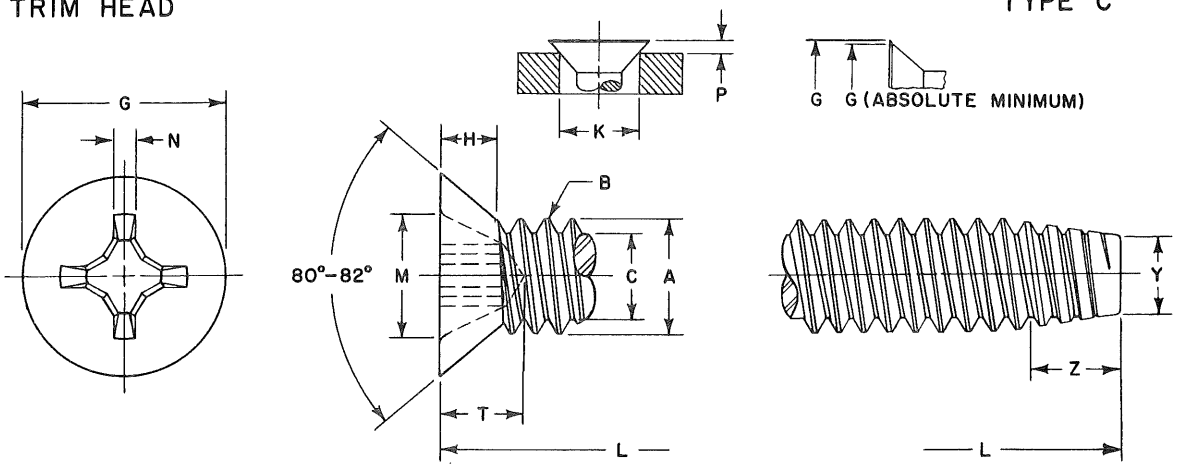

	Screw Size / Body	1/4				5/16				3/8	
	Head	10		12		12		1/4		5/16	
B	Threads Per Inch	20	28	20	28	18	24	18	24	16	24
A	Major Dia. of Thread	.2500 .2428	.2500 .2438	.2500 .2428	.2500 .2438	.3125 .3043	.3125 .3059	.3125 .3043	.3125 .3059	.3750 .3660	.3750 .3684
C	Minor Dia. of Thread (Max.)	.1887	.2062	.1887	.2062	.2443	.2614	.2443	.2614	.2983	.3239
G	Head Dia. (Max. Sharp) (Min. Sharp) (Abs. Min.)	.385 .359 .340	.385 .359 .340	.438 .410 .389	.438 .410 .389	.438 .410 .389	.438 .410 .389	.507 .477 .452	.507 .477 .452	.635 .600 .568	.635 .600 .568
K	Gaging Diameter	.313	.313	.362	.362	.362	.362	.424	.424	.539	.539
P	Protrusion Above Gaging Dia.	.042 .025	.042 .025	.045 .027	.045 .027	.045 .027	.045 .027	.049 .029	.049 .029	.057 .034	.057 .034
H	Head Height (Ref.)	.080	.080	.112	.112	.075	.075	.116	.116	.155	.155
M	Recess Diameter	.204 .191	.204 .191	.268 .255	.268 .255	.268 .255	.268 .255	.283 .270	.283 .270	.365 .352	.365 .352
T	Recess Depth	.136 .113	.136 .113	.156 .133	.156 .133	.156 .133	.156 .133	.171 .148	.171 .148	.216 .194	.216 .194
N	Recess Width (Min.)	.032	.032	.035	.035	.035	.035	.036	.036	.061	.061
	Driver Size	2	2	3	3	3	3	3	3	4	4
	Penetration Gaging Depth	.125 .102	.125 .102	.139 .116	.139 .116	.139 .116	.139 .116	.154 .131	.154 .131	.196 .174	.196 .174
Y	Point Diameter	.198 .181	.213 .201	.198 .181	.213 .201	.255 .236	.269 .255	.255 .236	.269 .255	.310 .289	.332 .318
L	LENGTH	FORD PART NUMBERS									
	1/4 3/8	53567-S	53568-S	53569-S	53570-S	53571-S	53572-S	53573-S	53574-S		
	1/2	53575-S	53576-S	53577-S	53578-S	53579-S	53580-S	53581-S	53582-S	53583-S	53584-S
	5/8 3/4 7/8	53585-S 53595-S 53605-S	53586-S 53596-S 53606-S	53587-S 53597-S 53607-S	53588-S 53598-S 53608-S	53589-S 53599-S 53609-S	53590-S 53600-S 53610-S	53591-S 53601-S 53611-S	53592-S 53602-S 53612-S	53593-S 53603-S 53613-S	53594-S 53604-S 53614-S
	1 1 1/4 1 1/2 1 3/4	53615-S 53625-S 53635-S 53645-S	53616-S 53626-S 53636-S 53646-S	53617-S 53627-S 53637-S 53647-S	53618-S 53628-S 53638-S 53648-S	53619-S 53629-S 53639-S 53649-S	53620-S 53630-S 53640-S 53650-S	53621-S 53631-S 53641-S 53651-S	53622-S 53632-S 53642-S 53652-S	53623-S 53633-S 53643-S 53653-S	53624-S 53634-S 53644-S 53654-S

NOTES: For General Specifications see Page D-950.01. For Finishes see Section "Z" Addendum.
MATERIAL: Steel, case hardened.
Screws longer than 8 pitches in length (Part Numbers shown below double lines) shall have a taper length "Z" of 3-1/2 to 4-1/2 times the pitch distance. (See General Specifications.)
Screws 8 pitches or shorter in length (Part Numbers shown above double lines) shall have a taper length "Z" of 2-1/2 to 3-1/2 times the pitch distance. (See General Specifications.)
Recess penetration and protrusion gaging values are shown above. For method, gage tolerances and gaging equipment see Section "Z" Addendum.

FORD MOTOR COMPANY
STANDARD PARTS

TAPPING SCREWS
FLAT TRIM HEAD

CROSS RECESSED
TYPES D, F, & G

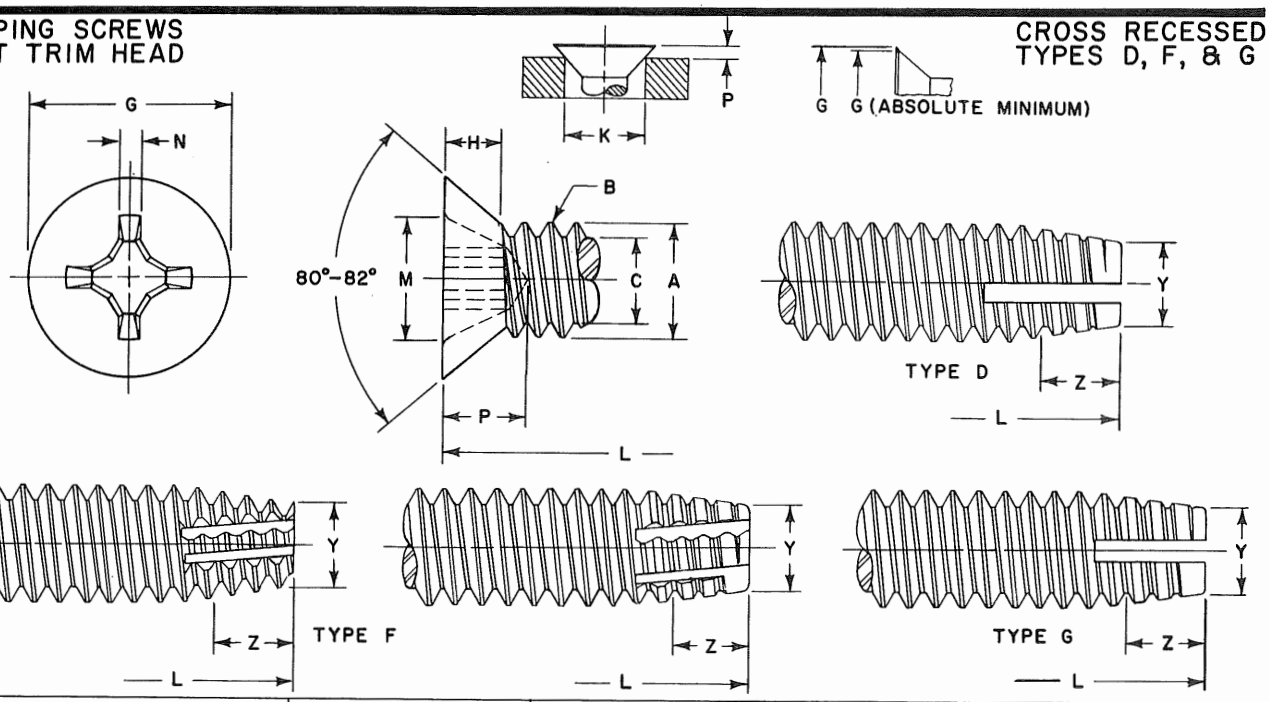

	Screw Size / Body	6		8		10		12	
	Head	4	5	5	6	8		8	10
B	Threads Per Inch	32	32	32	32	24	32	24	24
A	Major Dia. of Thread	.1380 .1326	.1380 .1326	.1640 .1586	.1640 .1586	.1900 .1834	.1900 .1846	.2160 .2094	.2160 .2094
C	Minor Dia. of Thread (Max.)	.0997	.0997	.1257	.1257	.1389	.1517	.1649	.1649
G	Head Dia. (Max. Sharp) (Min. Sharp) (Abs. Min.)	.225 .207 .195	.252 .232 .220	.252 .232 .220	.279 .257 .244	.332 .308 .292	.332 .308 .292	.332 .308 .292	.385 .359 .340
K	Gaging Diameter	.172	.196	.196	.220	.267	.267	.267	.313
P	Protrusion Above Gaging Dia.	.032 .019	.034 .020	.034 .020	.036 .021	.039 .023	.039 .023	.039 .023	.042 .025
H	Head Height (Ref.)	.052	.068	.052	.069	.085	.085	.069	.101
M	Recess Diameter	.128 .115	.154 .141	.164 .151	.182 .169	.189 .176	.189 .176	.198 .185	.204 .191
T	Recess Depth	.089 .073	.086 .063	.096 .073	.114 .091	.121 .098	.121 .098	.131 .105	.136 .113
N	Recess Width (Min.)	.018	.027	.029	.030	.031	.031	.032	.032
	Driver Size	1	2	2	2	2	2	2	2
	Penetration Gaging Depth	.082 .066	.075 .052	.085 .062	.103 .080	.110 .087	.110 .087	.120 .097	.125 .102
Y	Point Diameter	.106 .095	.106 .095	.132 .121	.132 .121	.147 .133	.158 .147	.173 .159	.173 .159
L	LENGTH	FORD PART NUMBERS							
	1/4	53655-S	53656-S	53657-S	53658-S	53659-S	53660-S	53661-S	
	3/8	53662-S	53663-S	53664-S	53665-S	53666-S	53667-S	53668-S	53669-S
	1/2 5/8 3/4 7/8	53670-S 53678-S 53686-S 53694-S	53671-S 53679-S 53687-S 53695-S	53672-S 53680-S 53688-S 53696-S	53673-S 53681-S 53689-S 53697-S	53674-S 53682-S 53690-S 53698-S	53675-S 53683-S 53691-S 53699-S	53676-S 53684-S 53692-S 53700-S	53677-S 53685-S 53693-S 53701-S
	1 1 1/4 1 1/2 1 3/4	53702-S 53710-S 53718-S	53703-S 53711-S 53719-S	53704-S 53712-S 53720-S	53705-S 53713-S 53721-S	53706-S 53714-S 53722-S 53726-S	53707-S 53715-S 53723-S 53727-S	53708-S 53716-S 53724-S 53728-S	53709-S 53717-S 53725-S 53729-S

NOTES: For General Specifications see Page D-950.01. For Finishes see Section "Z" Addendum.
MATERIAL: Steel, case hardened.
Screws longer than 8 pitches in length (Part Numbers shown below double lines) shall have a taper length "Z" of 3-1/2 to 4-1/2 times the pitch distance. (See General Specifications.)
Screws 8 pitches or shorter in length (Part Numbers shown above double lines) shall have a taper length "Z" of 2-1/2 to 3-1/2 times the pitch distance. (See General Specifications.)
Recess penetration and protrusion gaging values are shown above. For method, gage tolerances and gaging equipment see Section "Z" Addendum.

FORD MOTOR COMPANY
STANDARD PARTS

TAPPING SCREWS
FLAT TRIM HEAD

CROSS RECESSED
TYPES D, F, & G

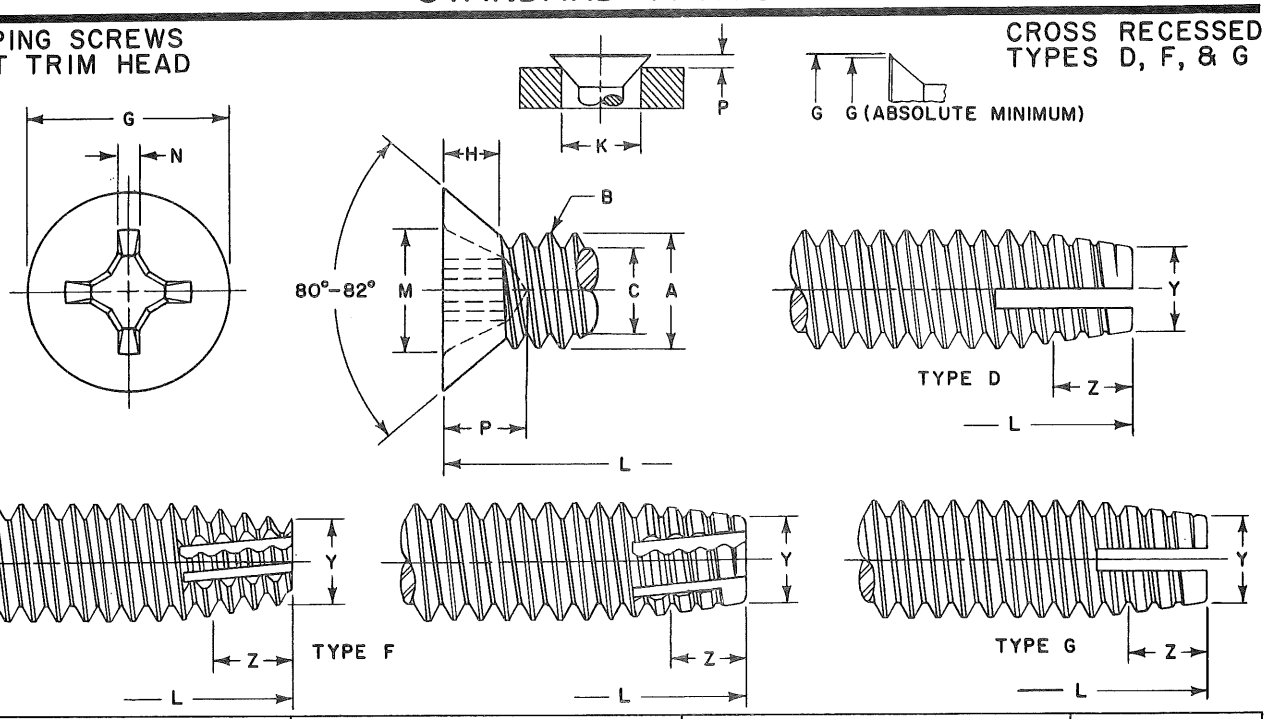

	Screw Size / Body / Head	1/4				5/16				3/8	
	Head	10		12		12		1/4		5/16	
B	Threads Per Inch	20	28	20	28	18	24	18	24	16	24
A	Major Dia. of Thread	.2500 .2428	.2500 .2438	.2500 .2428	.2500 .2438	.3125 .3043	.3125 .3059	.3125 .3043	.3125 .3059	.3750 .3660	.3750 .3684
C	Minor Dia. of Thread (Max.)	.1887	.2062	.1887	.2062	.2443	.2614	.2443	.2614	.2983	.3239
G	Head Dia. (Max. Sharp) (Min. Sharp) (Abs. Min.)	.385 .359 .340	.385 .359 .340	.438 .410 .389	.438 .410 .389	.438 .410 .389	.438 .410 .389	.507 .477 .452	.507 .477 .452	.635 .600 .568	.635 .600 .568
K	Gaging Diameter	.313	.313	.362	.362	.362	.362	.424	.424	.539	.539
P	Protrusion Above Gaging Dia.	.042 .025	.042 .025	.045 .027	.045 .027	.045 .027	.045 .027	.049 .029	.049 .029	.057 .034	.057 .034
H	Head Height (Ref.)	.080	.080	.112	.112	.075	.075	.116	.116	.155	.155
M	Recess Diameter	.204 .191	.204 .191	.268 .255	.268 .255	.268 .255	.268 .255	.283 .270	.283 .270	.365 .352	.365 .352
T	Recess Depth	.136 .113	.136 .113	.156 .133	.156 .133	.156 .133	.156 .133	.171 .148	.171 .148	.216 .194	.216 .194
N	Recess Width (Min.)	.032	.032	.035	.035	.035	.035	.036	.036	.061	.061
	Driver Size	2	2	3	3	3	3	3	3	4	4
	Penetration Gaging Depth	.125 .102	.125 .102	.139 .116	.139 .116	.139 .116	.139 .116	.154 .131	.154 .131	.196 .174	.196 .174
Y	Point Diameter	.198 .181	.213 .201	.198 .181	.213 .201	.255 .236	.269 .255	.255 .236	.269 .255	.310 .289	.332 .318
L	LENGTH	FORD PART NUMBERS									
1/4											
3/8		53730-S	53731-S	53732-S	53733-S	53734-S	53735-S	53736-S	53737-S		
1/2		53738-S	53739-S	53740-S	53741-S	53742-S	53743-S	53744-S	53745-S	53746-S	53747-S
5/8		53748-S	53749-S	53750-S	53751-S	53752-S	53753-S	53754-S	53755-S	53756-S	53757-S
3/4		53758-S	53759-S	53760-S	53761-S	53762-S	53763-S	53764-S	53765-S	53766-S	53767-S
7/8		53768-S	53769-S	53770-S	53771-S	53772-S	53773-S	53774-S	53775-S	53776-S	53777-S
1		53778-S	53779-S	53780-S	53781-S	53782-S	53783-S	53784-S	53785-S	53786-S	53787-S
1 1/4		53788-S	53789-S	53790-S	53791-S	53792-S	53793-S	53794-S	53795-S	53796-S	53797-S
1 1/2		53798-S	53799-S	53800-S	53801-S	53802-S	53803-S	53804-S	53805-S	53806-S	53807-S
1 3/4		53808-S	53809-S	53810-S	53811-S	53812-S	53813-S	53814-S	53815-S	53816-S	53817-S

NOTES: For General Specifications see Page D-950.01. For Finishes see Section "Z" Addendum.
MATERIAL: Steel, case hardened.
Screws longer than 8 pitches in length (Part Numbers shown below double lines) shall have a taper length "Z" of 3-1/2 to 4-1/2 times the pitch distance. (See General Specifications.)
Screws 8 pitches or shorter in length (Part Numbers shown above double lines) shall have a taper length "Z" of 2-1/2 to 3-1/2 times the pitch distance. (See General Specifications.)
Recess penetration and protrusion gaging values are shown above. For method, gage tolerances and gaging equipment see Section "Z" Addendum.

FORD MOTOR COMPANY
STANDARD PARTS

TAPPING SCREWS
HEXAGON HEAD

TYPE A

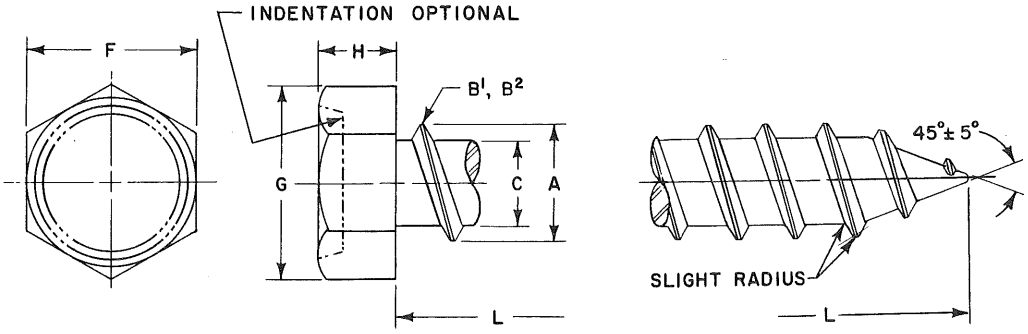

	Screw Size	4	5	6	7	8	10	12	14
B^1	Threads Per Inch	24	20	18	16	15	12	11	10
B^2	Threads Per Inch	24	20	20	19	18	16	14	14
A	Major Dia. of Thread	.114 .110	.130 .126	.141 .136	.158 .152	.168 .162	.194 .188	.221 .215	.254 .248
C	Minor Dia. of Thread	.083 .078	.095 .090	.102 .096	.114 .108	.123 .116	.133 .126	.162 .155	.185 .178
F	Width Across Flats	.187 .181	.187 .181	.250 .244	.250 .244	.250 .244	.312 .305	.312 .305	.375 .367
G	Width Across Corners	.202	.202	.272	.272	.272	.340	.340	.409
H	Head Height	.060 .049	.070 .058	.093 .080	.093 .080	.110 .096	.120 .105	.155 .139	.190 .172
L	LENGTH	FORD PART NUMBERS							
1/4		41988-S	41989-S	41990-S	41991-S	41992-S			
3/8		41995-S	41996-S	41997-S	41998-S	41999-S	42000-S	42001-S	31488-S
1/2		42002-S	42003-S	42004-S	42005-S	42006-S	42007-S	42008-S	31489-S
5/8		42009-S	42010-S	42011-S	42012-S	42013-S	42014-S	42015-S	31490-S
3/4		42016-S	42017-S	42018-S	42019-S	42020-S	42021-S	42022-S	42023-S
7/8				42024-S	42025-S	42026-S	42027-S	42028-S	42029-S
1					42030-S	42031-S	42032-S	42033-S	42034-S
1 1/4					42035-S	42036-S	42037-S	42038-S	42039-S
1 1/2						42040-S	42041-S	42042-S	42043-S
1 3/4						42044-S	42045-S	42046-S	42047-S

NOTES: For General Specifications see Page D-950.01. For Finishes see Section "Z" Addendum.
MATERIAL: Steel, case hardened.
B^1 shows number of threads for standard length screws only. (Part Numbers shown below double lines).
B^2 shows number of threads for short length screws only. (Part Numbers shown above double lines).
Indentation optional with manufacturer. Shape of indentation shall not impair function of part.

FORD MOTOR COMPANY
STANDARD PARTS

TAPPING SCREWS
HEXAGON HEAD

TYPES B & BP

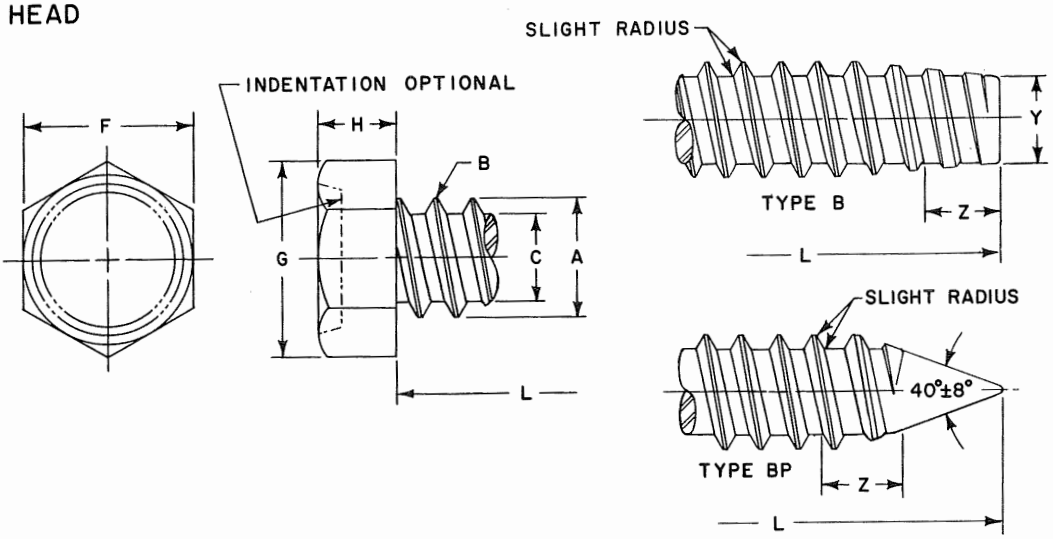

	Screw Size	4	5	6	7	8	10	12	1/4
B	Threads Per Inch	24	20	20	19	18	16	14	14
A	Major Dia. of Thread	.114 .110	.130 .126	.139 .135	.154 .149	.166 .161	.189 .183	.215 .209	.246 .240
C	Minor Dia. of Thread	.086 .082	.094 .090	.104 .099	.115 .109	.122 .116	.141 .135	.164 .157	.192 .185
F	Width Across Flats	.187 .181	.187 .181	.250 .244	.250 .244	.250 .244	.312 .305	.312 .305	.375 .367
G	Width Across Corners	.202	.202	.272	.272	.272	.340	.340	.409
H	Head Height	.060 .049	.070 .058	.093 .080	.093 .080	.110 .096	.120 .105	.155 .139	.190 .172
Y	Point Diameter	.079 .074	.087 .082	.095 .089	.105 .099	.112 .106	.130 .123	.152 .145	.179 .171
L	LENGTH	FORD PART NUMBERS					TYPE B		
1/4		42228-S	42229-S	42230-S	42231-S	42232-S	42233-S	42234-S	
3/8		42235-S	42236-S	42237-S	42238-S	42239-S	42240-S	42241-S	31518-S
1/2		42242-S	42243-S	42244-S	42245-S	42246-S	42247-S	42248-S	31519-S
5/8		42249-S	42250-S	42251-S	42252-S	42253-S	42254-S	42255-S	31520-S
3/4		42256-S	42257-S	42258-S	42259-S	42260-S	42261-S	42262-S	42263-S
7/8				42264-S	42265-S	42266-S	42267-S	42268-S	42269-S
1					42270-S	42271-S	42272-S	42273-S	42274-S
1 1/4					42275-S	42276-S	42277-S	42278-S	42279-S
1 1/2						42280-S	42281-S	42282-S	42283-S
1 3/4						42284-S	42285-S	42286-S	42287-S
L	LENGTH	FORD PART NUMBERS					TYPE BP		
1/4		42468-S	42469-S	42470-S	42471-S	42472-S			
3/8		42475-S	42476-S	42477-S	42478-S	42479-S	42480-S	42481-S	31550-S
1/2		42482-S	42483-S	42484-S	42485-S	42486-S	42487-S	42488-S	31551-S
5/8		42489-S	42490-S	42491-S	42492-S	42493-S	42494-S	42495-S	31552-S
3/4		42496-S	42497-S	42498-S	42499-S	42500-S	42501-S	42502-S	42503-S
7/8				42504-S	42505-S	42506-S	42507-S	42508-S	42509-S
1					42510-S	42511-S	42512-S	42513-S	42514-S
1 1/4					42515-S	42516-S	42517-S	42518-S	42519-S
1 1/2						42520-S	42521-S	42522-S	42523-S
1 3/4						42524-S	42525-S	42526-S	42527-S

NOTES: For General Specifications see Page D-950.01. For Finishes see Section "Z" Addendum.
MATERIAL: Steel, case hardened.
Screw lengths greater than "short length" series, (Part Numbers shown below double line) shall have a taper length "Z" of 2- to 2-1/2 times the pitch distance. (See General Specifications).
Short length screws (Part Numbers shown above double lines) shall have a taper length "Z" of 1-1/2 to 2- times the pitch distance. (See General Specifications).
Type BP short length screws (Part Numbers shown above double line) are impractical to manufacture.
Indentation optional with manufacturer. Shape of indentation shall not impair function of part.

FORD MOTOR COMPANY
STANDARD PARTS

TAPPING SCREWS
HEXAGON HEAD

TYPE C

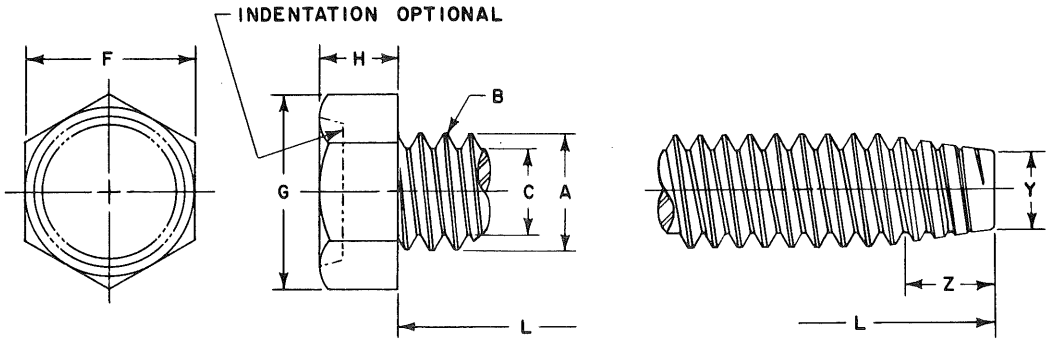

	Screw Size	6	8	10		12	1/4		5/16		3/8	
B	Threads Per Inch	32	32	24	32	24	20	28	18	24	16	24
A	Major Dia. of Thread	.1380 .1326	.1640 .1586	.1900 .1834	.1900 .1846	.2160 .2094	.2500 .2428	.2500 .2438	.3125 .3043	.3125 .3059	.3750 .3660	.3750 .3684
C	Minor Dia. of Thread (Max.)	.0997	.1257	.1389	.1517	.1649	.1887	.2062	.2443	.2614	.2983	.3239
F	Width Across Flats	.250 .244	.250 .244	.312 .305	.312 .305	.312 .305	.375 .367	.375 .367	.500 .489	.500 .489	.562 .551	.562 .551
G	Width Across Corners (Min.)	.272	.272	.340	.340	.340	.409	.409	.545	.545	.614	.614
H	Head Height	.093 .080	.110 .096	.120 .105	.120 .105	.155 .139	.190 .172	.190 .172	.230 .208	.230 .208	.295 .270	.295 .270
Y	Point Diameter	.106 .095	.132 .121	.147 .133	.158 .147	.173 .159	.198 .181	.213 .201	.255 .236	.269 .255	.310 .289	.332 .318
L	LENGTH	FORD PART NUMBERS										
1/4		40110-S	40111-S	40112-S	40113-S							
3/8		40123-S	40124-S	40125-S	40126-S	40127-S	40128-S	40129-S	40130-S	40131-S		
1/2		40136-S	40137-S	40138-S	40139-S	40140-S	40141-S	40142-S	40143-S	40144-S	40145-S	40146-S
5/8		40149-S	40150-S	40151-S	40152-S	40153-S	40154-S	40155-S	40156-S	40157-S	40158-S	40159-S
3/4		40162-S	40163-S	40164-S	40165-S	40166-S	40167-S	40168-S	40169-S	40170-S	40171-S	40172-S
7/8		40175-S	40176-S	40177-S	40178-S	40179-S	40180-S	40181-S	40182-S	40183-S	40184-S	40185-S
1		40188-S	40189-S	40190-S	40191-S	40192-S	40193-S	40194-S	40195-S	40196-S	40197-S	40198-S
1 1/4		40201-S	40202-S	40203-S	40204-S	40205-S	40206-S	40207-S	40208-S	40209-S	40210-S	40211-S
1 1/2		40214-S	40215-S	40216-S	40217-S	40218-S	40219-S	40220-S	40221-S	40222-S	40223-S	40224-S
1 3/4		40227-S	40228-S	40229-S	40230-S	40231-S	40232-S	40233-S	40234-S	40235-S	40236-S	40237-S

NOTES: For General Specifications see Page D-950.01. For Finishes see Section "Z" Addendum.
MATERIAL: Steel, case hardened.
Screws longer than 8 pitches in length (Part Numbers shown below double lines) shall have a taper length "Z" of 3-1/2 to 4-1/2 times the pitch distance. (See General Specifications).
Screws 8 pitches or shorter in length (Part Numbers shown above double lines) shall have a taper length "Z" of 2-1/2 to 3-1/2 times the pitch distance. (See General Specifications).
Indentation optional with manufacturer. Shape of indentation shall not impair function of part.

FORD MOTOR COMPANY
STANDARD PARTS

TAPPING SCREWS
HEXAGON HEAD

TYPES D, F, & G

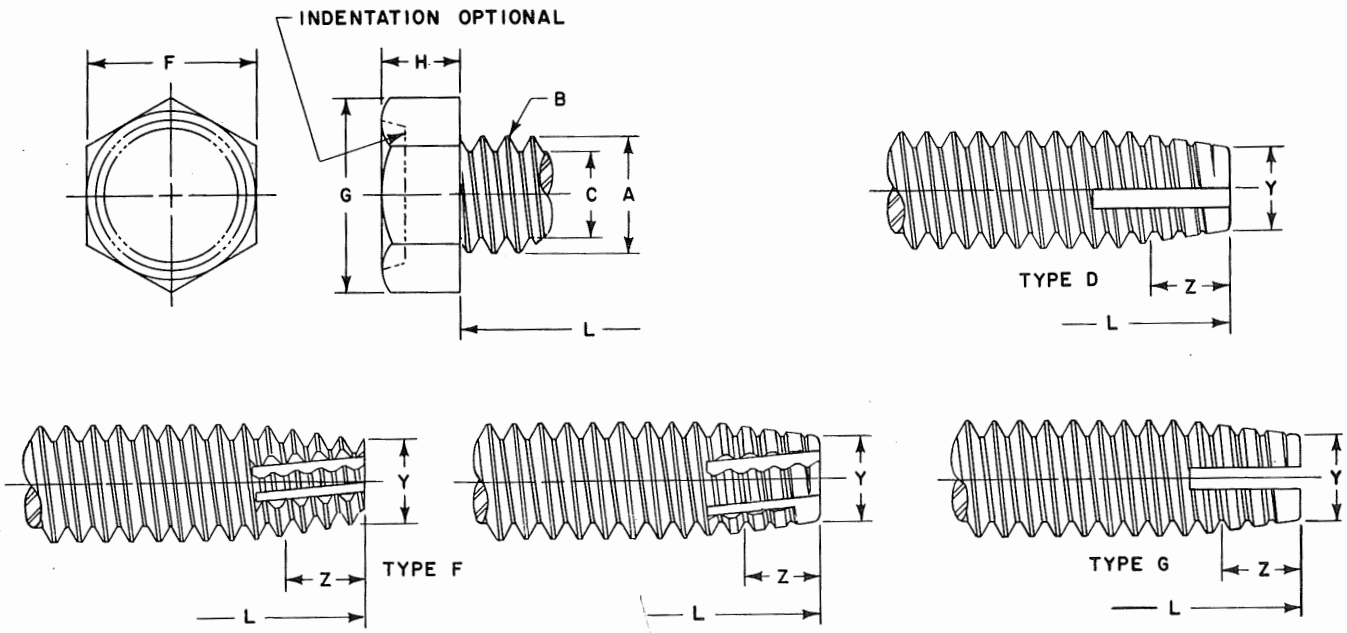

	Screw Size	6	8	10		12	1/4		5/16		3/8	
B	Threads Per Inch	32	32	24	32	24	20	28	18	24	16	24
A	Major Dia. of Thread	.1380 .1326	.1640 .1586	.1900 .1834	.1900 .1846	.2160 .2094	.2500 .2428	.2500 .2438	.3125 .3043	.3125 .3059	.3750 .3660	.3750 .3684
C	Minor Dia. of Thread (Max.)	.0997	.1257	.1389	.1517	.1649	.1887	.2062	.2443	.2614	.2983	.3239
F	Width Across Flats	.250 .244	.250 .244	.312 .305	.312 .305	.312 .305	.375 .367	.375 .367	.500 .489	.500 .489	.562 .551	.562 .551
G	Width Across Corners (Min.)	.272	.272	.340	.340	.340	.409	.409	.545	.545	.614	.614
H	Head Height	.093 .080	.110 .096	.120 .105	.120 .105	.155 .139	.190 .172	.190 .172	.230 .208	.230 .208	.295 .270	.295 .270
Y	Point Diameter	.106 .095	.132 .121	.147 .133	.158 .147	.173 .159	.198 .181	.213 .201	.255 .236	.269 .255	.310 .289	.332 .318
L	LENGTH	FORD PART NUMBERS										
1/4		41150-S	41151-S	41152-S	41153-S							
3/8		41163-S	41164-S	41165-S	41166-S	41167-S	41168-S	41169-S	41170-S	41171-S		
1/2		41176-S	41177-S	41178-S	41179-S	41180-S	41181-S	41182-S	41183-S	41184-S	41185-S	41186-S
5/8		41189-S	41190-S	41191-S	41192-S	41193-S	41194-S	41195-S	41196-S	41197-S	41198-S	41199-S
3/4		41202-S	41203-S	41204-S	41205-S	41206-S	41207-S	41208-S	41209-S	41210-S	41211-S	41212-S
7/8		41215-S	41216-S	41217-S	41218-S	41219-S	41220-S	41221-S	41222-S	41223-S	41224-S	41225-S
1		41228-S	41229-S	41230-S	41231-S	41232-S	41233-S	41234-S	41235-S	41236-S	41237-S	41238-S
1 1/4		41241-S	41242-S	41243-S	41244-S	41245-S	41246-S	41247-S	41248-S	41249-S	41250-S	41251-S
1 1/2		41254-S	41255-S	41256-S	41257-S	41258-S	41259-S	41260-S	41261-S	41262-S	41263-S	41264-S
1 3/4		41267-S	41268-S	41269-S	41270-S	41271-S	41272-S	41273-S	41274-S	41275-S	41276-S	41277-S

NOTES: For General Specifications see Page D-950.01. For Finishes see Section "Z" Addendum.
MATERIAL: Steel, case hardened.
Screws longer than 8 pitches in length (Part Numbers shown below double lines) shall have a taper length "Z" of 3-1/2 to 4-1/2 times the pitch distance. (See General Specifications).
Screws 8 pitches or shorter in length (Part Numbers shown above double lines) shall have a taper length "Z" of 2-1/2 to 3-1/2 times the pitch distance. (See General Specifications).
Indentation optional with manufacturer. Shape of indentation shall not impair function of part.

FORD MOTOR COMPANY
STANDARD PARTS

TAPPING SCREWS
HEXAGON HEAD

SLOTTED
TYPE A

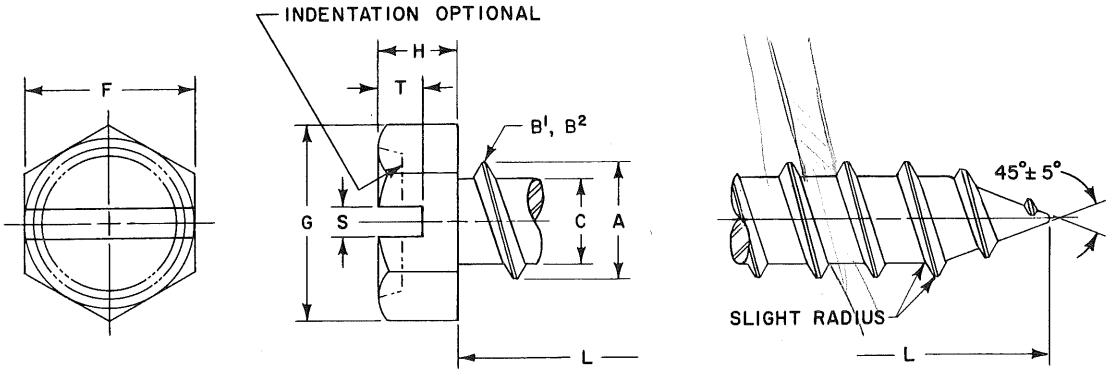

	Screw Size	4	5	6	7	8	10	12	14
B^1	Threads Per Inch	24	20	18	16	15	12	11	10
B^2	Threads Per Inch	24	20	20	19	18	16	14	14
A	Major Dia. of Thread	.114 .110	.130 .126	.141 .136	.158 .152	.168 .162	.194 .188	.221 .215	.254 .248
C	Minor Dia. of Thread	.083 .078	.095 .090	.102 .096	.114 .108	.123 .116	.133 .126	.162 .155	.185 .178
F	Width Across Flats	.187 .181	.187 .181	.250 .244	.250 .244	.250 .244	.312 .305	.312 .305	.375 .367
G	Width Across Corners	.202	.202	.272	.272	.272	.340	.340	.409
H	Height of Head	.060 .049	.070 .058	.093 .080	.093 .080	.110 .096	.120 .105	.155 .139	.190 .172
S	Slot Width	.039 .031	.043 .035	.048 .039	.048 .039	.054 .045	.060 .050	.067 .056	.075 .064
T	Slot Depth	.036 .025	.042 .030	.046 .033	.054 .040	.066 .052	.072 .057	.093 .077	.101 .083
L	LENGTH	FORD PART NUMBERS							
1/4		42048-S	42049-S	42050-S	42051-S	42052-S			
3/8		42055-S	42056-S	42057-S	42058-S	42059-S	42060-S	42061-S	31492-S
1/2		42062-S	42063-S	42064-S	42065-S	42066-S	42067-S	42068-S	31493-S
5/8		42069-S	42070-S	42071-S	42072-S	42073-S	42074-S	42075-S	31494-S
3/4		42076-S	42077-S	42078-S	42079-S	42080-S	42081-S	42082-S	42083-S
7/8				42084-S	42085-S	42086-S	42087-S	42088-S	42089-S
1					42090-S	42091-S	42092-S	42093-S	42094-S
1 1/4					42095-S	42096-S	42097-S	42098-S	42099-S
1 1/2						42100-S	42101-S	42102-S	42103-S
1 3/4						42104-S	42105-S	42106-S	42107-S

NOTES: For General Specifications see Page D-950.01. For Finishes see Section "Z" Addendum.
MATERIAL: Steel, case hardened.
B^1 shows number of threads for standard length screws only. (Part Numbers shown below double lines).
B^2 shows number of threads for short length screws only. (Part Numbers shown above double lines).
Indentation optional with manufacturer. Position of slot and shape of indentation shall not impair function of part.

FORD MOTOR COMPANY
STANDARD PARTS

TAPPING SCREWS
HEXAGON HEAD

SLOTTED
TYPES B & BP

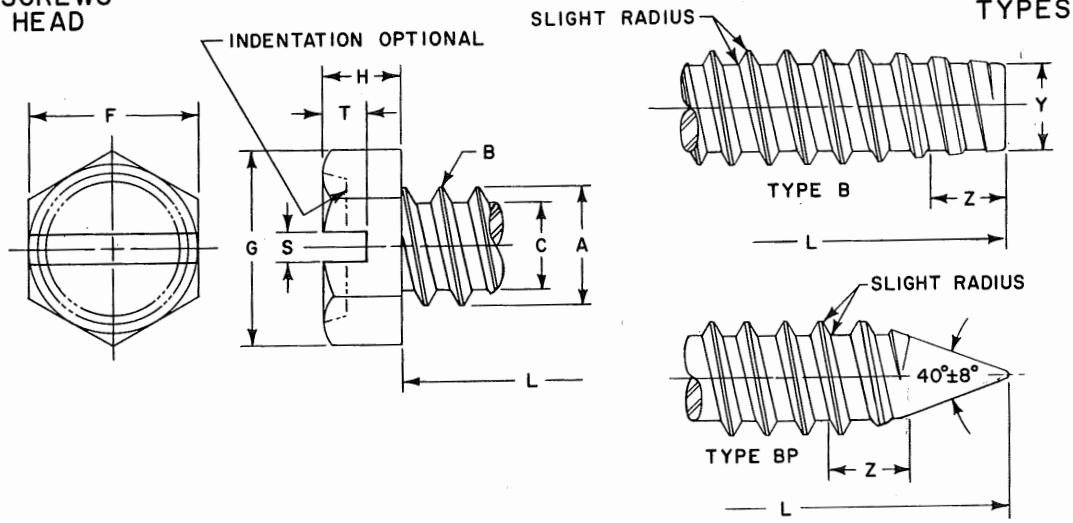

	Screw Size	4	5	6	7	8	10	12	1/4
B	Threads Per Inch	24	20	20	19	18	16	14	14
A	Major Dia. of Thread	.114 .110	.130 .126	.139 .135	.154 .149	.166 .161	.189 .183	.215 .209	.246 .240
C	Minor Dia. of Thread	.086 .082	.094 .090	.104 .099	.115 .109	.122 .116	.141 .135	.164 .157	.192 .185
F	Width Across Flats	.187 .181	.187 .181	.250 .244	.250 .244	.250 .244	.312 .305	.312 .305	.375 .367
G	Width Across Corners (Min.)	.202	.202	.272	.272	.272	.340	.340	.409
H	Head Height	.060 .049	.070 .058	.093 .080	.093 .080	.110 .096	.120 .105	.155 .139	.190 .172
S	Slot Width	.039 .031	.043 .035	.048 .039	.048 .039	.054 .045	.060 .050	.067 .056	.075 .064
T	Slot Depth	.036 .025	.042 .030	.046 .033	.054 .040	.066 .052	.072 .057	.093 .077	.101 .083
Y	Point Diameter	.079 .074	.087 .082	.095 .089	.105 .099	.112 .106	.130 .123	.152 .145	.179 .171
L	LENGTH	FORD PART NUMBERS					TYPE B		
1/4		42288-S	42289-S	42290-S	42291-S	42292-S	42293-S	42294-S	
3/8		42295-S	42296-S	42297-S	42298-S	42299-S	42300-S	42301-S	31522-S
1/2		42302-S	42303-S	42304-S	42305-S	42306-S	42307-S	42308-S	31523-S
5/8		42309-S	42310-S	42311-S	42312-S	42313-S	42314-S	42315-S	31524-S
3/4		42316-S	42317-S	42318-S	42319-S	42320-S	42321-S	42322-S	42323-S
7/8				42324-S	42325-S	42326-S	42327-S	42328-S	42329-S
1					42330-S 42335-S	42331-S 42336-S	42332-S 42337-S	42333-S 42338-S	42334-S 42339-S
1 1/4						42340-S	42341-S	42342-S	42343-S
1 1/2						42344-S	42345-S	42346-S	42347-S
1 3/4									
L	LENGTH	FORD PART NUMBERS					TYPE BP		
1/4		42528-S	42529-S	42530-S	42531-S	42532-S			
3/8		42535-S	42536-S	42537-S	42538-S	42539-S	42540-S	42541-S	31554-S
1/2		42542-S	42543-S	42544-S	42545-S	42546-S	42547-S	42548-S	31555-S
5/8		42549-S	42550-S	42551-S	42552-S	42553-S	42554-S	42555-S	31556-S
3/4		42556-S	42557-S	42558-S	42559-S	42560-S	42561-S	42562-S	42563-S
7/8				42564-S	42565-S	42566-S	42567-S	42568-S	42569-S
1					42570-S 42575-S	42571-S 42576-S	42572-S 42577-S	42573-S 42578-S	42574-S 42579-S
1 1/4						42580-S	42581-S	42582-S	42583-S
1 1/2						42584-S	42585-S	42586-S	42587-S
1 3/4									

NOTES: For General Specifications see Page D-950.01. For Finishes see Section "Z" Addendum.
MATERIAL: Steel, case hardened.
Screw lengths greater than "short length" series, (Part Numbers shown below double lines) shall have a taper length "Z" of 2- to 2-1/2 times the pitch distance. (See General Specifications).
Short length screws (Part Numbers shown above double lines) shall have a taper length "Z" of 1-1/2 to 2- times the pitch distance. (See General Specifications).
Type BP short length screws (Part Numbers shown above double lines) areimpractical to manufacture.
Indentation optional with manufacturer. Position of slot and shape of indentation shall not impair function of part.

FORD MOTOR COMPANY
STANDARD PARTS

TAPPING SCREWS
HEXAGON HEAD

SLOTTED
TYPE C

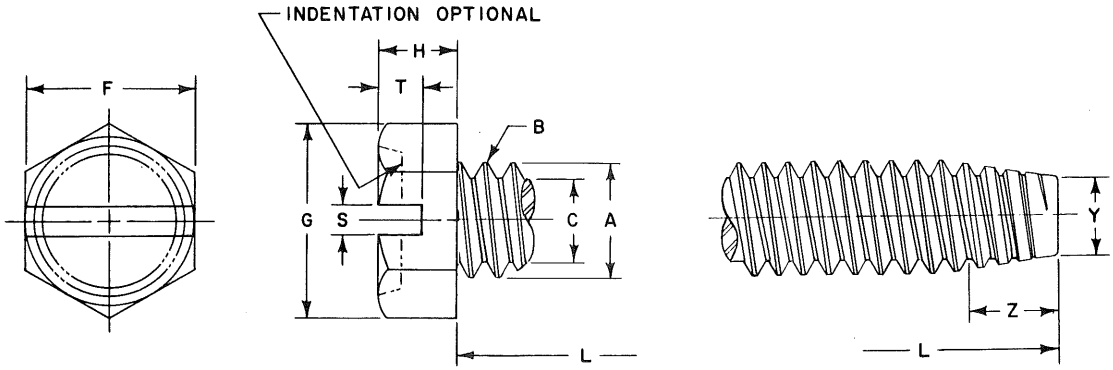

	Screw Size	6	8	10		12	1/4		5/16		3/8	
B	Threads Per Inch	32	32	24	32	24	20	28	18	24	16	24
A	Major Dia. of Thread	.1380 .1326	.1640 .1586	.1900 .1834	.1900 .1846	.2160 .2094	.2500 .2428	.2500 .2438	.3125 .3043	.3125 .3059	.3750 .3660	.3750 .3684
C	Minor Dia. of Thread (Max.)	.0997	.1257	.1389	.1517	.1649	.1887	.2062	.2443	.2614	.2983	.3239
F	Width Across Flats	.250 .244	.250 .244	.312 .305	.312 .305	.312 .305	.375 .367	.375 .367	.500 .489	.500 .489	.562 .551	.562 .551
G	Width Across Corners (Min.)	.272	.272	.340	.340	.340	.409	.409	.545	.545	.614	.614
H	Head Height	.093 .080	.110 .096	.120 .105	.120 .105	.155 .139	.190 .172	.190 .172	.230 .208	.230 .208	.295 .270	.295 .270
S	Slot Width	.048 .039	.054 .045	.060 .050	.060 .050	.067 .056	.075 .064	.075 .064	.084 .072	.084 .072	.094 .081	.094 .081
T	Slot Depth	.046 .033	.066 .052	.072 .057	.072 .057	.093 .077	.101 .083	.101 .083	.122 .100	.122 .100	.156 .131	.156 .131
Y	Point Diameter	.106 .095	.132 .121	.147 .133	.158 .147	.173 .159	.198 .181	.213 .201	.255 .236	.269 .255	.310 .289	.332 .318
L	LENGTH	FORD PART NUMBERS										
1/4		39980-S	39981-S	39982-S	39983-S							
3/8		39993-S	39994-S	39995-S	39996-S	39997-S	39998-S	39999-S	40000-S	40001-S		
1/2		40006-S	40007-S	40008-S	40009-S	40010-S	40011-S	40012-S	40013-S	40014-S	40015-S	40016-S
5/8		40019-S	40020-S	40021-S	40022-S	40023-S	40024-S	40025-S	40026-S	40027-S	40028-S	40029-S
3/4		40032-S	40033-S	40034-S	40035-S	40036-S	40037-S	40038-S	40039-S	40040-S	40041-S	40042-S
7/8		40045-S	40046-S	40047-S	40048-S	40049-S	40050-S	40051-S	40052-S	40053-S	40054-S	40055-S
1		40058-S	40059-S	40060-S	40061-S	40062-S	40063-S	40064-S	40065-S	40066-S	40067-S	40068-S
1 1/4		40071-S	40072-S	40073-S	40074-S	40075-S	40076-S	40077-S	40078-S	40079-S	40080-S	40081-S
1 1/2		40084-S	40085-S	40086-S	40087-S	40088-S	40089-S	40090-S	40091-S	40092-S	40093-S	40094-S
1 3/4		40097-S	40098-S	40099-S	40100-S	40101-S	40102-S	40103-S	40104-S	40105-S	40106-S	40107-S

NOTES: For General Specifications see Page D-950.01. For Finishes see Section "Z" Addendum.
MATERIAL: Steel, case hardened.
Screws longer than 8 pitches in length (Part Numbers shown below double lines) shall have a taper length "Z" of 3-1/2 to 4-1/2 times the pitch distance. (See General Specifications).
Screws 8 pitches or shorter in length (Part Numbers shown above double lines) shall have a taper length "Z" of 2-1/2 to 3-1/2 times the pitch distance. (See General Specifications).
Indentation optional with manufacturer. Position of slot and shape of indentation shall not impair function of part.

FORD MOTOR COMPANY
STANDARD PARTS

TAPPING SCREWS
HEXAGON HEAD

SLOTTED
TYPES D, F, & G

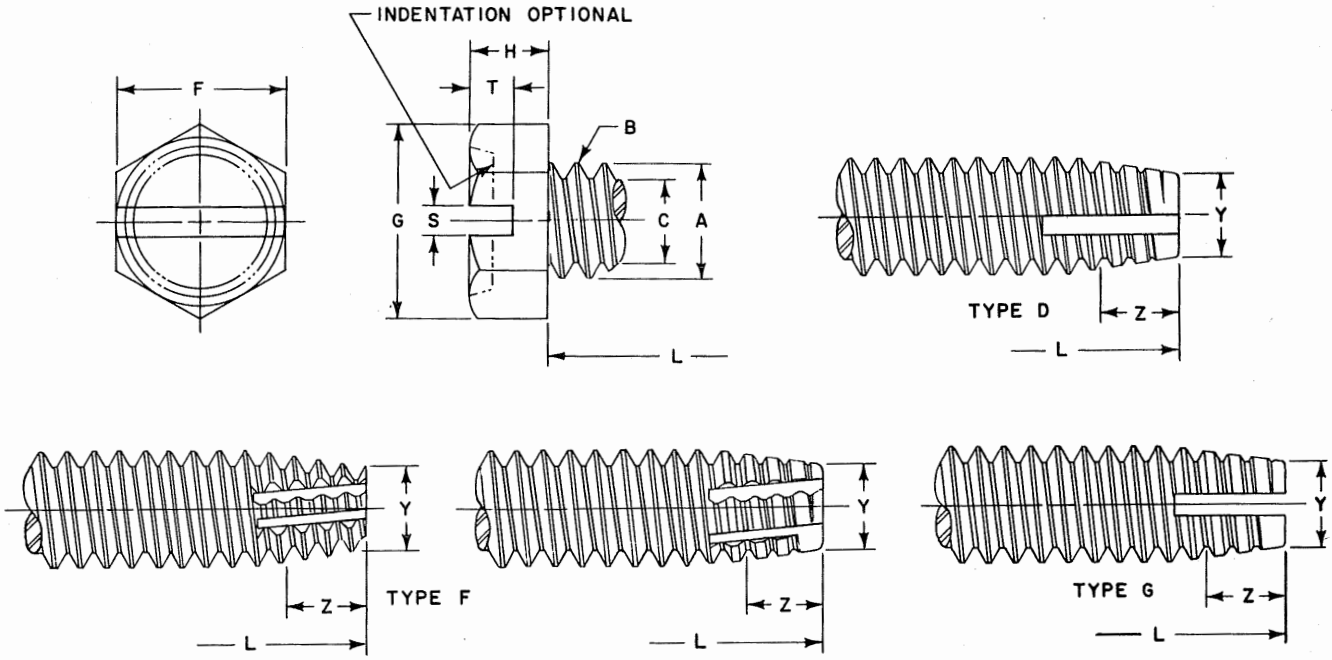

	Screw Size	6	8	10		12	1/4		5/16		3/8	
B	Threads Per Inch	32	32	24	32	24	20	28	18	24	16	24
A	Major Dia. of Thread	.1380 .1326	.1640 .1586	.1900 .1834	.1900 .1846	.2160 .2094	.2500 .2428	.2500 .2438	.3125 .3043	.3125 .3059	.3750 .3660	.3750 .3684
C	Minor Dia. of Thread (Max.)	.0997	.1257	.1889	.1517	.1649	.1887	.2062	.2443	.2614	.2983	.3239
F	Width Across Flats	.250 .244	.250 .244	.312 .305	.312 .305	.312 .305	.375 .367	.375 .367	.500 .489	.500 .489	.562 .551	.562 .551
G	Width Across Corners (Min.)	.272	.272	.340	.340	.340	.409	.409	.545	.545	.614	.614
H	Head Height	.093 .080	.110 .096	.120 .105	.120 .105	.155 .139	.190 .172	.190 .172	.230 .208	.230 .208	.295 .270	.295 .270
S	Slot Width	.048 .039	.054 .045	.060 .050	.060 .050	.067 .056	.075 .064	.075 .064	.084 .072	.084 .072	.094 .081	.094 .081
T	Slot Depth	.046 .033	.066 .052	.072 .057	.072 .057	.093 .077	.101 .083	.101 .083	.122 .100	.122 .100	.156 .131	.156 .131
Y	Point Diameter	.106 .095	.132 .121	.147 .133	.158 .147	.173 .159	.198 .181	.213 .201	.255 .236	.269 .255	.310 .289	.332 .318
L	LENGTH	FORD PART NUMBERS										
	1/4	41020-S	41021-S	41022-S	41023-S							
	3/8	41033-S	41034-S	41035-S	41036-S	41037-S	41038-S	41039-S	41040-S	41041-S		
	1/2	41046-S	41047-S	41048-S	41049-S	41050-S	41051-S	41052-S	41053-S	41054-S	41055-S	41056-S
	5/8	41059-S	41060-S	41061-S	41062-S	41063-S	41064-S	41065-S	41066-S	41067-S	41068-S	41069-S
	3/4	41072-S	41073-S	41074-S	41075-S	41076-S	41077-S	41078-S	41079-S	41080-S	41081-S	41082-S
	7/8	41085-S	41086-S	41087-S	41088-S	41089-S	41090-S	41091-S	41092-S	41093-S	41094-S	41095-S
	1	41098-S	41099-S	41100-S	41101-S	41102-S	41103-S	41104-S	41105-S	41106-S	41107-S	41108-S
	1 1/4	41111-S	41112-S	41113-S	41114-S	41115-S	41116-S	41117-S	41118-S	41119-S	41120-S	41121-S
	1 1/2	41124-S	41125-S	41126-S	41127-S	41128-S	41129-S	41130-S	41131-S	41132-S	41133-S	41134-S
	1 3/4	41137-S	41138-S	41139-S	41140-S	41141-S	41142-S	41143-S	41144-S	41145-S	41146-S	41147-S

NOTES: For General Specifications see Page D-950.01. For Finishes see Section "Z" Addendum.
MATERIAL: Steel, case hardened.
Screws longer than 8 pitches in length (Part Numbers shown below double lines) shall have a taper length "Z" of 3-1/2 to 4-1/2 times the pitch distance. (See General Specifications).
Screws 8 pitches or shorter in length (Part Numbers shown above double lines) shall have a taper length "Z" of 2-1/2 to 3-1/2 times the pitch distance. (See General Specifications).
Indentation optional with manufacturer. Position of slot and shape of indentation shall not impair function of part.

FORD MOTOR COMPANY
STANDARD PARTS

TAPPING SCREWS
HEXAGON WASHER HEAD

TYPE A

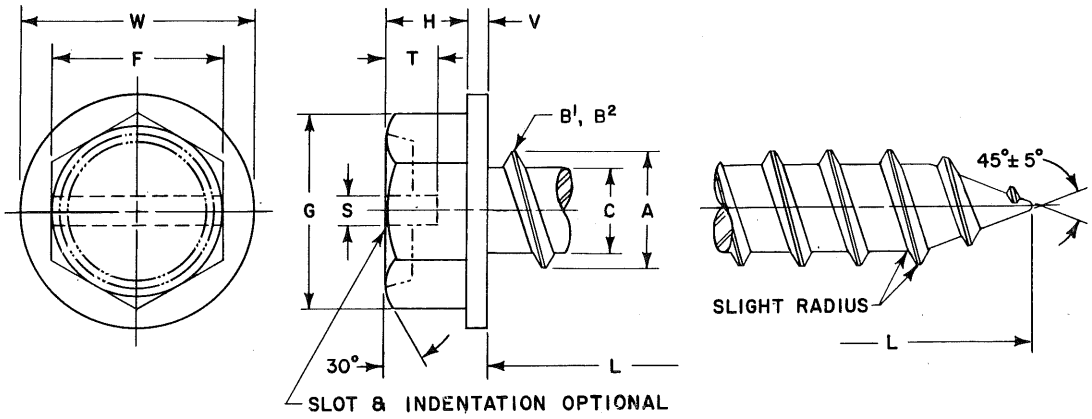

	Screw Size	4	5	6	7	8	10	12	14
B^1	Threads Per Inch	24	20	18	16	15	12	11	10
B^2	Threads Per Inch	24	20	20	19	18	16	14	14
A	Major Dia. of Thread	.114 .110	.130 .126	.141 .136	.158 .152	.168 .162	.194 .188	.221 .215	.254 .248
C	Minor Dia. of Thread	.083 .078	.095 .090	.102 .096	.114 .108	.123 .116	.133 .126	.162 .155	.185 .178
F	Width Across Flats	.187 .181	.187 .181	.250 .244	.250 .244	.250 .244	.312 .305	.312 .305	.375 .367
G	Width Across Corners (Min.)	.202	.202	.272	.272	.272	.340	.340	.409
H	Head Height	.060 .049	.070 .058	.093 .080	.093 .080	.110 .096	.120 .105	.155 .139	.190 .172
W	Washer Diameter	.243 .225	.260 .240	.328 .302	.328 .302	.348 .322	.414 .384	.432 .398	.520 .480
V	Washer Thickness	.019 .011	.025 .015	.025 .015	.029 .017	.031 .019	.031 .019	.039 .022	.050 .030
S	Slot Width	.039 .031	.043 .035	.048 .039	.048 .039	.054 .045	.060 .050	.067 .056	.075 .064
T	Slot Depth	.042 .025	.049 .030	.053 .033	.062 .040	.074 .052	.080 .057	.103 .077	.111 .083
L	LENGTH	FORD PART NUMBERS							
1/4		42108-S	42109-S	42110-S	42111-S	42112-S			
3/8		42115-S	42116-S	42117-S	42118-S	42119-S	42120-S	42121-S	31496-S
1/2		42122-S	42123-S	42124-S	42125-S	42126-S	42127-S	42128-S	31497-S
5/8		42129-S	42130-S	42131-S	42132-S	42133-S	42134-S	42135-S	31498-S
3/4		42136-S	42137-S	42138-S	42139-S	42140-S	42141-S	42142-S	42143-S
7/8				42144-S	42145-S	42146-S	42147-S	42148-S	42149-S
1					42150-S	42151-S	42152-S	42153-S	42154-S
1 1/4					42155-S	42156-S	42157-S	42158-S	42159-S
1 1/2						42160-S	42161-S	42162-S	42163-S
1 3/4						42164-S	42165-S	42166-S	42167-S

Recommended Finish: S8. For other Finishes see Section "Z" Addendum.
MATERIAL: Steel, case hardened.
For General Specifications see Page D-950.01.
B^1 shows number of threads for standard length screws only. (Part Numbers shown below double lines.)
B^2 shows number of threads for short length screws only. (Part Numbers shown above double lines.)
Maximum radius allowed at junction of sides of hex and washer shall be .15 times the Basic Major Diameter.
Slot and indentation optional with manufacturer. Position of slot and shape of indendation shall not impair function of part.

FORD MOTOR COMPANY
STANDARD PARTS

TAPPING SCREWS
HEXAGON WASHER HEAD

TYPES B & BP

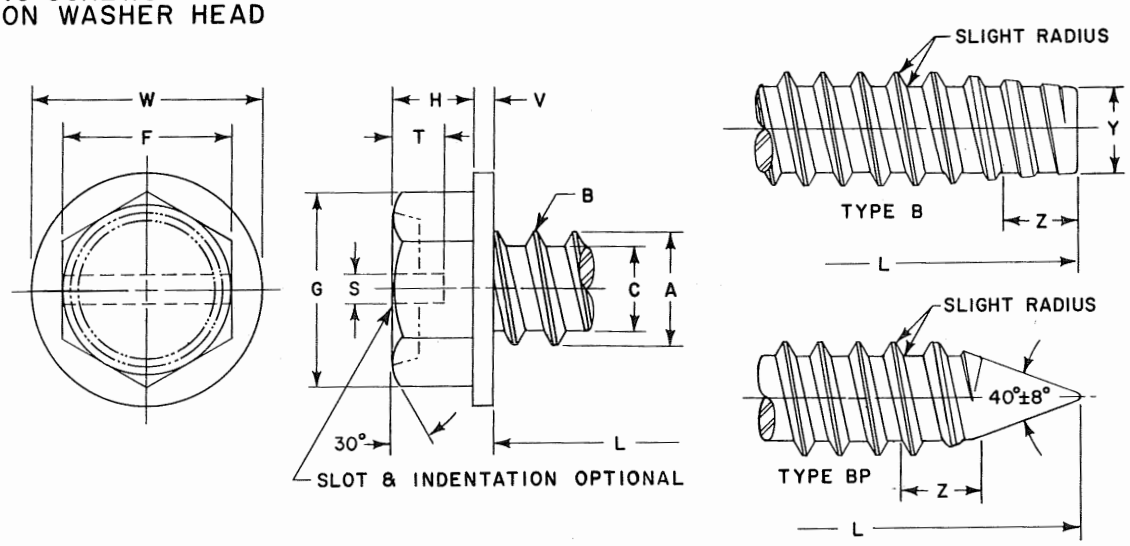

	Screw Size	4	5	6	7	8	10	12	1/4
B	Threads Per Inch	24	20	20	19	18	16	14	14
A	Major Dia. of Thread	.114 .110	.130 .126	.139 .135	.154 .149	.166 .161	.189 .183	.215 .209	.246 .240
C	Minor Dia. of Thread	.086 .082	.094 .090	.104 .099	.115 .109	.122 .116	.141 .135	.164 .157	.192 .185
F	Width Across Flats	.187 .181	.187 .181	.250 .244	.250 .244	.250 .244	.312 .305	.312 .305	.375 .367
G	Width Across Corners (Min.)	.202	.202	.272	.272	.272	.340	.340	.409
H	Head Height	.060 .049	.070 .058	.093 .080	.093 .080	.110 .096	.120 .105	.155 .139	.190 .172
W	Washer Diameter	.243 .225	.260 .240	.328 .302	.328 .302	.348 .322	.414 .384	.432 .398	.520 .480
V	Washer Thickness	.019 .011	.025 .015	.025 .015	.029 .017	.031 .019	.031 .019	.039 .022	.050 .030
S	Slot Width	.039 .031	.043 .035	.048 .039	.048 .039	.054 .045	.060 .050	.067 .056	.075 .064
T	Slot Depth	.042 .025	.049 .030	.053 .033	.062 .040	.074 .052	.080 .057	.103 .077	.111 .083
Y	Point Diameter	.079 .074	.087 .082	.095 .089	.105 .099	.112 .106	.130 .123	.152 .145	.179 .171
L	LENGTH	FORD PART NUMBERS					TYPE B		
	1/4	42348-S	42349-S	42350-S	42351-S	42352-S	42353-S	42354-S	
	3/8	42355-S	42356-S	42357-S	42358-S	42359-S	42360-S	42361-S	31526-S
	1/2	42362-S	42363-S	42364-S	42365-S	42366-S	42367-S	42368-S	31527-S
	5/8	42369-S	42370-S	42371-S	42372-S	42373-S	42374-S	42375-S	31528-S
	3/4	42376-S	42377-S	42378-S	42379-S	42380-S	42381-S	42382-S	42383-S
	7/8			42384-S	42385-S	42386-S	42387-S	42388-S	42389-S
	1				42390-S	42391-S	42392-S	42393-S	42394-S
	1 1/4				42395-S	42396-S	42397-S	42398-S	42399-S
	1 1/2					42400-S	42401-S	42402-S	42403-S
	1 3/4					42404-S	42405-S	42406-S	42407-S
L	LENGTH	FORD PART NUMBERS					TYPE BP		
	1/4	42588-S	42589-S	42590-S	42591-S	42592-S			
	3/8	42595-S	42596-S	42597-S	42598-S	42599-S	42600-S	42601-S	31558-S
	1/2	42602-S	42603-S	42604-S	42605-S	42606-S	42607-S	42608-S	31559-S
	5/8	42609-S	42610-S	42611-S	42612-S	42613-S	42614-S	42615-S	31560-S
	3/4	42616-S	42617-S	42618-S	42619-S	42620-S	42621-S	42622-S	42623-S
	7/8			42624-S	42625-S	42626-S	42627-S	42628-S	42629-S
	1				42630-S	42631-S	42632-S	42633-S	42634-S
	1 1/4				42635-S	42636-S	42637-S	42638-S	42639-S
	1 1/2					42640-S	42641-S	42642-S	42643-S
	1 3/4					42644-S	42645-S	42646-S	42647-S

Recommended Finish: S8. For other Finishes see Section "Z" Addendum.
MATERIAL: Steel, case hardened.
For General Specifications see Page D-950.01.
Screw lengths greater than "short length" series, (Part Numbers shown below double lines) shall have a taper length "Z" of 2- to 2-1/2 times the pitch distance. (See General Specifications).
Short length screws (Part Numbers shown above double lines) shall have a taper length "Z" of 1-1/2 to 2- times the pitch distance. (See General Specifications).
Type BP short length screws (Part Numbers shown above double lines) are impractical to manufacture.
Maximum radius allowed at junction of sides of hex and washer shall be .15 times the Basic Major Diameter.
Slot and indentation optional with manufacturer. Position of slot and shape of indentation shall not impair function of part.

TAPPING SCREWS
HEXAGON WASHER HEAD

TYPE C

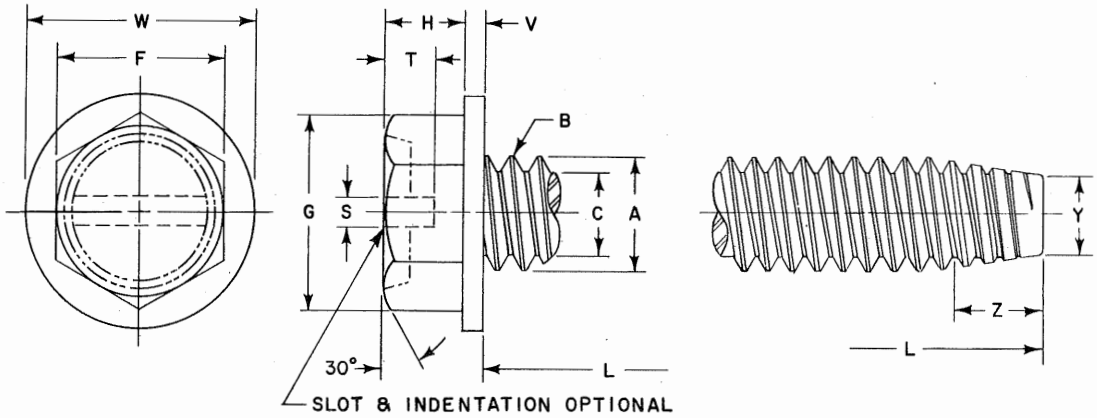

	Screw Size	6	8	10		12	1/4		5/16		3/8	
B	Threads Per Inch	32	32	24	32	24	20	28	18	24	16	24
A	Major Dia. of Thread	.1380 .1326	.1640 .1586	.1900 .1834	.1900 .1846	.2160 .2094	.2500 .2428	.2500 .2438	.3125 .3043	.3125 .3059	.3750 .3660	.3750 .3684
C	Minor Dia. of Thread (Max.)	.0997	.1257	.1389	.1517	.1649	.1887	.2062	.2443	.2614	.2983	.3239
F	Width Across Flats	.250 .244	.250 .244	.312 .305	.312 .305	.312 .305	.375 .367	.375 .367	.500 .489	.500 .489	.562 .551	.562 .551
G	Width Across Corners (Min.)	.272	.272	.340	.340	.340	.409	.409	.545	.545	.614	.614
H	Head Height	.093 .080	.110 .096	.120 .105	.120 .105	.155 .139	.190 .172	.190 .172	.230 .208	.230 .208	.295 .270	.295 .270
W	Washer Diameter	.328 .302	.348 .322	.414 .384	.414 .384	.432 .398	.520 .480	.520 .480	.676 .624	.676 .624	.780 .720	.780 .720
V	Washer Thickness	.025 .015	.031 .019	.031 .019	.031 .019	.039 .022	.050 .030	.050 .030	.055 .035	.055 .035	.063 .037	.063 .037
S	Slot Width	.048 .039	.054 .045	.060 .050	.060 .050	.067 .056	.075 .064	.075 .064	.084 .072	.084 .072	.094 .081	.094 .081
T	Slot Depth	.053 .033	.074 .052	.080 .057	.080 .057	.103 .077	.111 .083	.111 .083	.134 .100	.134 .100	.168 .131	.168 .131
Y	Point Diameter	.106 .095	.132 .121	.147 .133	.158 .147	.173 .159	.198 .181	.213 .201	.255 .236	.269 .255	.310 .289	.332 .318
L	LENGTH	FORD PART NUMBERS										
1/4		39850-S	39851-S	39852-S	39853-S							
3/8		39863-S	39864-S	39865-S	39866-S	39867-S	39868-S	39869-S	39870-S	39871-S		
1/2		39876-S	39877-S	39878-S	39879-S	39880-S	39881-S	39882-S	39883-S	39884-S	39885-S	39886-S
5/8		39889-S	39890-S	39891-S	39892-S	39893-S	39894-S	39895-S	39896-S	39897-S	39898-S	39899-S
3/4		39902-S	39903-S	39904-S	39905-S	39906-S	39907-S	39908-S	39909-S	39910-S	39911-S	39912-S
7/8		39915-S	39916-S	39917-S	39918-S	39919-S	39920-S	39921-S	39922-S	39923-S	39924-S	39925-S
1		39928-S	39929-S	39930-S	39931-S	39932-S	39933-S	39934-S	39935-S	39936-S	39937-S	39938-S
1 1/4		39941-S	39942-S	39943-S	39944-S	39945-S	39946-S	39947-S	39948-S	39949-S	39950-S	39951-S
1 1/2		39954-S	39955-S	39956-S	39957-S	39958-S	39959-S	39960-S	39961-S	39962-S	39963-S	39964-S
1 3/4		39967-S	39968-S	39969-S	39970-S	39971-S	39972-S	39973-S	39974-S	39975-S	39976-S	39977-S

Recommended Finish: S8. For other Finishes see Section "Z" Addendum.
MATERIAL - Steel, case hardened.
For General Specifications see Page D-950.01.
Screws longer than 8 pitches in length (Part Numbers shown below double line) shall have a taper length "Z" of 3-1/2 to 4-1/2 times the pitch distance. (See General Specifications)
Screws 8 pitches or shorter in length (Part Numbers shown above double line) shall have a taper length "Z" of 2-1/2 to 3-1/2 times the pitch distance. (See General Specifications.)
Maximum radius allowed at junction of sides of hex and washer shall be .15 times the Basic Major Diameter.
Slot and indentation optional with manufacturer. Position of slot and shape of indentation shall not impair function of part.

FORD MOTOR COMPANY
STANDARD PARTS

TAPPING SCREWS
HEXAGON WASHER HEAD

TYPES D, F, & G

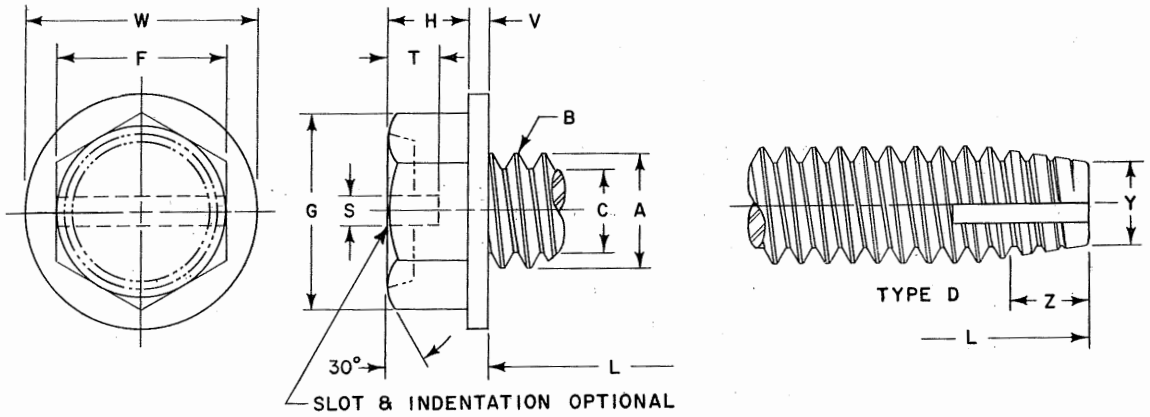

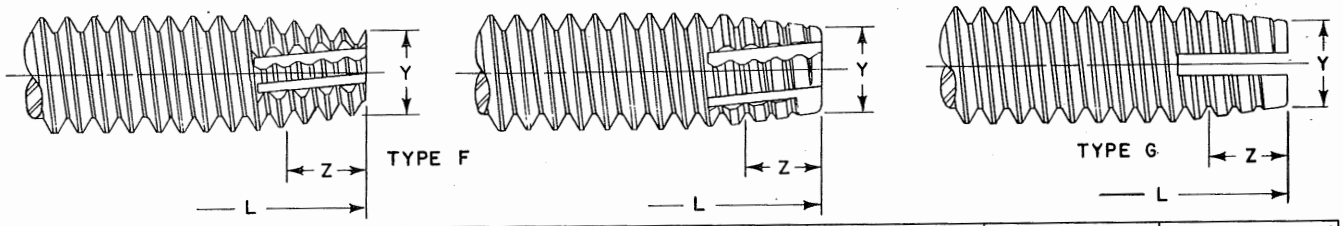

	Screw Size	6	8	10		12	1/4		5/16		3/8	
B	Threads Per Inch	32	32	24	32	24	20	28	18	24	16	24
A	Major Dia. of Thread	.1380 .1326	.1640 .1586	.1900 .1834	.1900 .1846	.2160 .2094	.2500 .2428	.2500 .2438	.3125 .3043	.3125 .3059	.3750 .3660	.3750 .3684
C	Minor Dia. of Thread (Max.)	.0997	.1257	.1389	.1517	.1649	.1887	.2062	.2443	.2614	.2983	.3239
F	Width Across Flats	.250 .244	.250 .244	.312 .305	.312 .305	.312 .305	.375 .367	.375 .367	.500 .489	.500 .489	.562 .551	.562 .551
G	Width Across Corners (Min.)	.272	.272	.340	.340	.340	.409	.409	.545	.545	.614	.614
H	Head Height	.093 .080	.110 .096	.120 .105	.120 .105	.155 .139	.190 .172	.190 .172	.230 .208	.230 .208	.295 .270	.295 .270
W	Washer Diameter	.328 .302	.348 .322	.414 .384	.414 .384	.432 .398	.520 .480	.520 .480	.676 .624	.676 .624	.780 .720	.780 .720
V	Washer Thickness	.025 .015	.031 .019	.031 .019	.031 .019	.039 .022	.050 .030	.050 .030	.055 .035	.055 .035	.063 .037	.063 .037
S	Slot Width	.048 .039	.054 .045	.060 .050	.060 .050	.067 .056	.075 .064	.075 .064	.084 .072	.084 .072	.094 .081	.094 .081
T	Slot Depth	.053 .033	.074 .052	.080 .057	.080 .057	.103 .077	.111 .083	.111 .083	.134 .100	.134 .100	.168 .131	.168 .131
Y	Point Diameter	.106 .095	.132 .121	.147 .133	.158 .147	.173 .159	.198 .181	.213 .201	.255 .236	.269 .255	.310 .289	.332 .318
L	LENGTH	FORD PART NUMBERS										
1/4		40890-S	40891-S	40892-S	40893-S							
3/8		40903-S	40904-S	40905-S	40906-S	40907-S	40914-S	40909-S	40910-S	40911-S		
1/2		40916-S	40917-S	40918-S	40919-S	40920-S	40927-S	40922-S	40923-S	40924-S	40928-S	40926-S
5/8		40929-S	40930-S	40931-S	40932-S	40933-S	40940-S	40935-S	40936-S	40937-S	40941-S	40939-S
3/4		40942-S	40943-S	40944-S	40945-S	40946-S	40953-S	40948-S	40949-S	40950-S	40954-S	40952-S
7/8		40955-S	40956-S	40957-S	40958-S	40959-S	40966-S	40961-S	40962-S	40963-S	40967-S	40965-S
1		40968-S	40969-S	40970-S	40971-S	40972-S	40979-S	40974-S	40975-S	40976-S	40980-S	40978-S
1 1/4		40981-S	40982-S	40983-S	40984-S	40985-S	40992-S	40987-S	40988-S	40989-S	40993-S	40991-S
1 1/2		40994-S	40995-S	40996-S	40997-S	40998-S	41005-S	41000-S	41001-S	41002-S	41006-S	41004-S
1 3/4		41007-S	41008-S	41009-S	41010-S	41011-S	41018-S	41013-S	41014-S	41015-S	41019-S	41017-S

Recommended Finish: S8. For other Finishes see Section "Z" Addendum.
MATERIAL: Steel, case hardened.
For General Specifications see Page D-950.01.
Screws longer than 8 pitches in length (Part Numbers shown below double line) shall have a taper length "Z" of 3-1/2 to 4-1/2 times the pitch distance. (See General Specifications.)
Screws 8 pitches or shorter in length (Part Numbers shown above double line) shall have a taper length "Z" of 2-1/2 to 3-1/2 times the pitch distance. (See General Specifications.)
Maximum radius allowed at junction of sides of hex and washer shall be .15 times the Basic Major Diameter.
Slot and indentation optional with manufacturer. Position of slot and shape of indentation shall not impair function of part.

FORD MOTOR COMPANY
STANDARD PARTS

TAPPING SCREWS
OVAL HEAD

SLOTTED
TYPE A

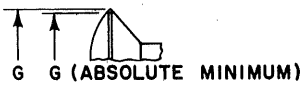

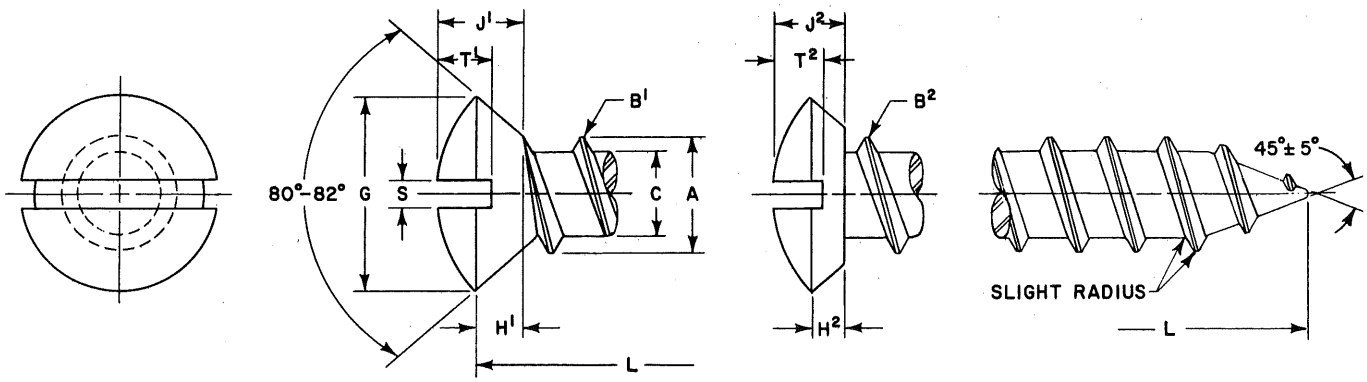

	Screw Size	4	5	6	7	8	10	12	14
B^1	Threads Per Inch	24	20	18	16	15	12	11	10
B^2	Threads Per Inch	24	20	20	19	18	16	14	14
A	Major Dia. of Thread	.114 .110	.130 .126	.141 .136	.158 .152	.168 .162	.194 .188	.221 .215	.254 .248
C	Minor Dia. of Thread	.083 .078	.095 .090	.102 .096	.114 .108	.123 .116	.133 .126	.162 .155	.185 .178
G	Head Dia. (Max. Sharp) (Min. Sharp) (Abs. Min.)	.225 .207 .195	.252 .232 .220	.279 .257 .244	.305 .283 .268	.332 .308 .292	.385 .359 .340	.438 .410 .389	.491 .461 .437
H^1	Side Height (Ref.)	.067	.075	.083	.091	.100	.116	.132	.148
H^2	Side Height (Ref.)	.047	.053	.059	.064	.070	.081	.092	.104
J^1	Total Head Height	.104 .084	.116 .095	.128 .105	.140 .116	.152 .126	.176 .148	.200 .169	.224 .190
J^2	Total Head Height	.084 .067	.094 .076	.104 .084	.113 .093	.123 .101	.142 .118	.161 .135	.180 .152
S	Slot Width	.039 .031	.043 .035	.048 .039	.048 .039	.054 .045	.060 .050	.067 .056	.075 .064
T^1	Slot Depth	.059 .049	.067 .055	.074 .060	.081 .066	.088 .072	.103 .084	.117 .096	.132 .108
T^2	Slot Depth	.053 .043	.059 .048	.065 .053	.071 .059	.078 .064	.090 .074	.103 .085	.115 .095
L	LENGTH	FORD PART NUMBERS							
1/4		32970-S							
3/8		32977-S	32978-S	32979-S	32980-S	32981-S			
1/2		32984-S	32985-S	32986-S	32987-S	32988-S	32989-S	32990-S	31481-S
5/8		32991-S	32992-S	32993-S	32994-S	32995-S	32996-S	32997-S	31482-S
3/4		32998-S	32999-S 33030-S	33000-S 33006-S	33001-S 33007-S	33002-S 33008-S	33003-S 33009-S	33004-S 33010-S	33005-S 33011-S
7/8									
1				33031-S 33032-S	33012-S 33017-S 33033-S 33034-S	33013-S 33018-S 33022-S 33026-S	33014-S 33019-S 33023-S 33027-S	33015-S 33020-S 33024-S 33028-S	33016-S 33021-S 33025-S 33029-S
1 1/4									
1 1/2									
1 3/4									

NOTES: For General Specifications see Page 950.01. For Finishes see Section "Z" Addendum.
MATERIAL: Steel, case hardened.
B^1, H^1, J^1, and T^1 show dimensions and number of threads for standard length screws only. (Part Numbers shown below double lines.)
B^2, H^2, J^2, and T^2 show dimensions and number of threads for short length undercut head screws only. (Part Numbers shown above double lines.)

FORD MOTOR COMPANY
STANDARD PARTS

TAPPING SCREWS
OVAL HEAD

SLOTTED
TYPES B & BP

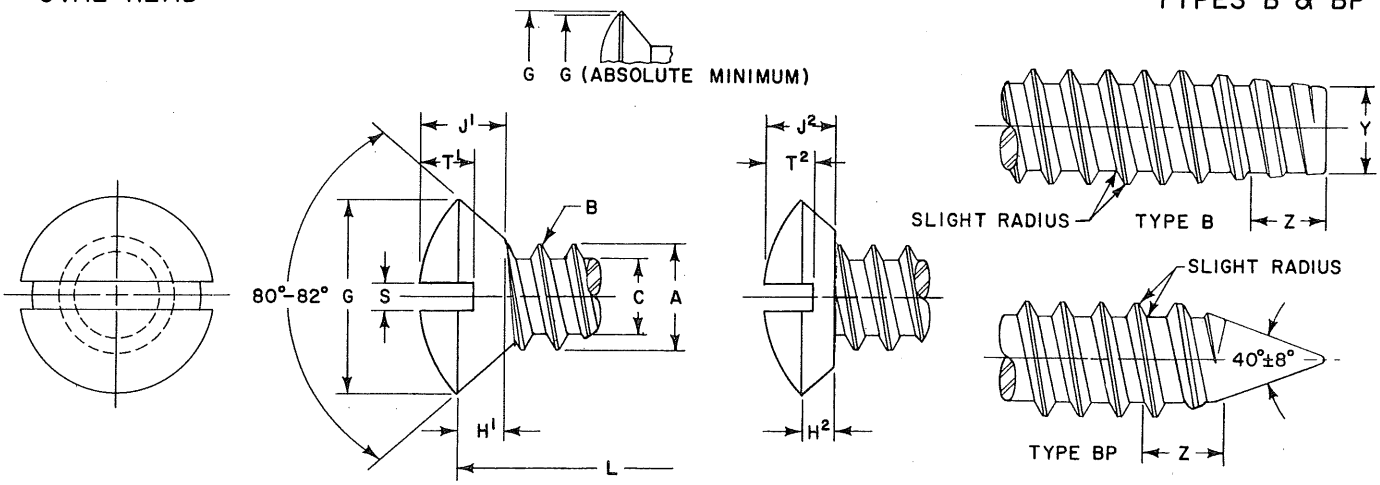

	Screw Size	4	5	6	7	8	10	12	1/4
B	Threads Per Inch	24	20	20	19	18	16	14	14
A	Major Dia. of Thread	.114 .110	.130 .126	.139 .135	.154 .149	.166 .161	.189 .183	.215 .209	.246 .240
C	Minor Dia. of Thread	.086 .082	.094 .090	.104 .099	.115 .109	.122 .116	.141 .135	.164 .157	.192 .185
G	Head Dia. (Max. Sharp) (Min. Sharp) (Abs. Min.)	.225 .207 .195	.252 .232 .220	.279 .257 .244	.305 .283 .268	.332 .308 .292	.385 .359 .340	.438 .410 .389	.507 .477 .452
H^1	Side Height (Ref.)	.067	.075	.083	.091	.100	.116	.132	.153
H^2	Side Height (Ref.)	.047	.053	.059	.064	.070	.081	.092	.107
J^1	Total Head Height	.104 .084	.116 .095	.128 .105	.140 .116	.152 .126	.176 .148	.200 .169	.232 .197
J^2	Total Head Height	.084 .067	.094 .076	.104 .084	.113 .093	.123 .101	.142 .118	.161 .135	.186 .158
S	Slot Width	.039 .031	.043 .035	.048 .039	.048 .039	.054 .045	.060 .050	.067 .056	.075 .064
T^1	Slot Depth	.059 .049	.067 .055	.074 .060	.081 .066	.088 .072	.103 .084	.117 .096	.136 .112
T^2	Slot Depth	.053 .043	.059 .048	.065 .053	.071 .059	.078 .064	.090 .074	.103 .085	.119 .098
Y	Point Diameter	.079 .074	.087 .082	.095 .089	.105 .099	.112 .106	.130 .123	.152 .145	.179 .171
L	LENGTH	FORD PART NUMBERS					TYPE B		
1/4		33230-S	33231-S	33232-S	33233-S				
3/8		33237-S	33238-S	33239-S	33240-S	33241-S	33242-S	33243-S	
1/2		33244-S	33245-S	33246-S	33247-S	33248-S	33249-S	33250-S	31511-S
5/8		33251-S	33252-S	33253-S	33254-S	33255-S	33256-S	33257-S	31512-S
3/4		33258-S	33259-S	33260-S 33266-S	33261-S 33267-S	33262-S 33268-S	33263-S 33269-S	33264-S 33270-S	33265-S 33271-S
7/8									
1					33272-S 33277-S	33273-S 33278-S 33282-S 33286-S	33274-S 33279-S 33283-S 33287-S	33275-S 33280-S 33284-S 33288-S	33276-S 33281-S 33285-S 33289-S
1 1/4									
1 1/2									
1 3/4									
L	LENGTH	FORD PART NUMBERS					TYPE BP		
1/4		33490-S							
3/8		33497-S	33498-S	33499-S	33500-S	33501-S			
1/2		33504-S	33505-S	33506-S	33507-S	33508-S	33509-S	33510-S	31543-S
5/8		33511-S	33512-S	33513-S	33514-S	33515-S	33516-S	33517-S	31544-S
3/4		33518-S	33519-S	33520-S 33526-S	33521-S 33527-S	33522-S 33528-S	33523-S 33529-S	33524-S 33530-S	33525-S 33531-S
7/8									
1					33532-S 33537-S	33533-S 33538-S 33542-S 33546-S	33534-S 33539-S 33543-S 33547-S	33535-S 33540-S 33544-S 33548-S	33536-S 33541-S 33545-S 33549-S
1 1/4									
1 1/2									
1 3/4									

NOTES: For General Specifications see Page D-950.01. For Finishes see Section "Z" Addendum. MATERIAL: Steel, case hardened. H^1, J^1, and T^1 show dimensions for standard length screws only. (Part Numbers shown below double lines.) H^2, J^2, and T^2 show dimensions for short length undercut head screws only. (Part Numbers shown above double lines.) Screw lengths greater than "short length" series (Part Numbers shown below double lines) shall have a taper length "Z" of 2- to 2-1/2 times the pitch distance. (See General Specifications.) Short length undercut head screws (Part Numbers shown above double lines) shall have a taper length "Z" of 1-1/2 to 2- times the pitch distance. Type BP short length screws (Part Numbers shown above double lines) are impractical to manufacture.

FORD MOTOR COMPANY
STANDARD PARTS

TAPPING SCREWS
OVAL HEAD

SLOTTED
TYPE C

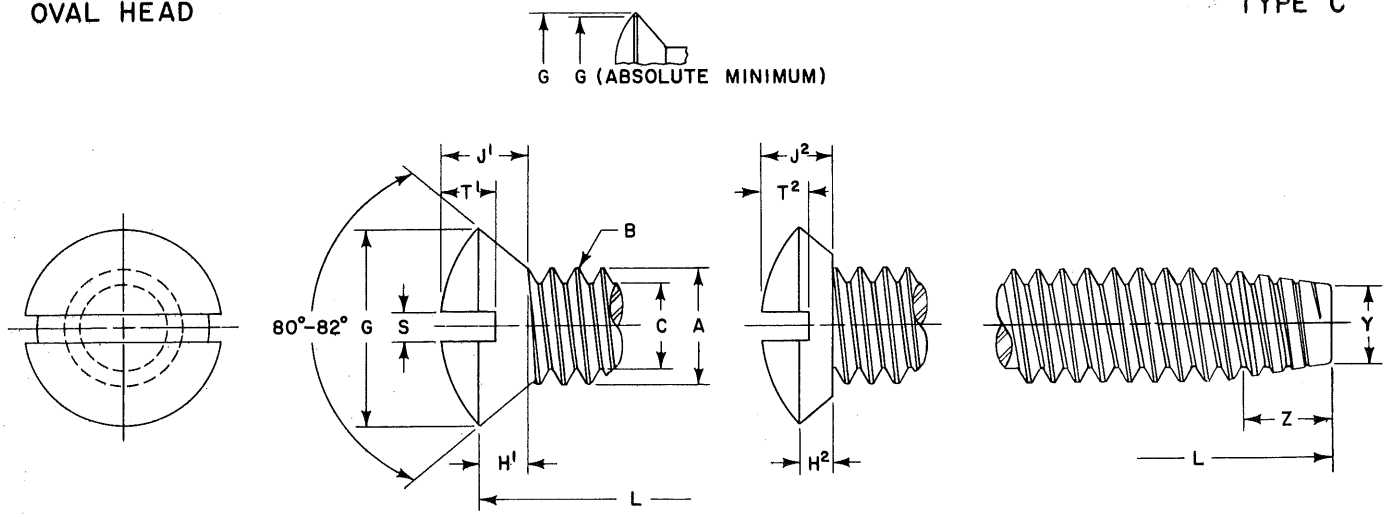

	Screw Size	6	8	10		12	1/4		5/16		3/8	
B	Threads Per Inch	32	32	24	32	24	20	28	18	24	16	24
A	Major Dia. of Thread	.1380 .1326	.1640 .1586	.1900 .1834	.1900 .1846	.2160 .2094	.2500 .2428	.2500 .2438	.3125 .3043	.3125 .3059	.3750 .3660	.3750 .3684
C	Minor Dia. of Thread (Max.)	.0997	.1257	.1389	.1517	.1649	.1887	.2062	.2443	.2614	.2983	.3239
G	Head Dia. (Max. Sharp) (Min. Sharp) (Abs. Min.)	.279 .257 .244	.332 .308 .292	.385 .359 .340	.385 .359 .340	.438 .410 .389	.507 .477 .452	.507 .477 .452	.635 .600 .568	.635 .600 .568	.762 .722 .685	.762 .722 .685
H^1	Side Height (Ref.)	.083	.100	.116	.116	.132	.153	.153	.191	.191	.230	.230
H^2	Side Height (Ref.)	.059	.070	.081	.081	.092	.107	.107	.134	.134	.161	.161
J^1	Total Head Height	.128 .105	.152 .126	.176 .148	.176 .148	.200 .169	.232 .197	.232 .197	.290 .249	.290 .249	.347 .300	.347 .300
J^2	Total Head Height	.104 .084	.123 .101	.142 .118	.142 .118	.161 .135	.186 .158	.186 .158	.232 .198	.232 .198	.278 .239	.278 .239
S	Slot Width	.048 .039	.054 .045	.060 .050	.060 .050	.067 .056	.075 .064	.075 .064	.084 .072	.084 .072	.094 .081	.094 .081
T^1	Slot Depth	.074 .060	.088 .072	.103 .084	.103 .084	.117 .096	.136 .112	.136 .112	.171 .141	.171 .141	.206 .170	.206 .170
T^2	Slot Depth	.065 .053	.078 .064	.090 .074	.090 .074	.103 .085	.119 .098	.119 .098	.149 .124	.149 .124	.179 .149	.179 .149
Y	Point Diameter	.106 .095	.132 .121	.147 .133	.158 .147	.173 .159	.198 .181	.213 .201	.255 .236	.269 .255	.310 .289	.332 .318
L	LENGTH	FORD PART NUMBERS										
1/4		40370-S	40371-S									
3/8		40383-S	40384-S	40385-S	40386-S	40387-S	40388-S	40389-S				
1/2		40396-S	40397-S	40398-S	40399-S	40400-S	40401-S	40402-S	40403-S	40404-S	40405-S	40406-S
5/8		40409-S	40410-S	40411-S	40412-S	40413-S	40414-S	40415-S	40416-S	40417-S	40418-S	40419-S
3/4		40422-S	40423-S	40424-S	40425-S	40426-S	40427-S	40428-S	40429-S	40430-S	40431-S	40432-S
7/8		40435-S	40436-S	40437-S	40438-S	40439-S	40440-S	40441-S	40442-S	40443-S	40444-S	40445-S
1		40448-S	40449-S	40450-S	40451-S	40452-S	40453-S	40454-S	40455-S	40456-S	40457-S	40458-S
1 1/4		40461-S	40462-S	40463-S	40464-S	40465-S	40466-S	40467-S	40468-S	40469-S	40470-S	40471-S
1 1/2		40474-S	40475-S	40476-S	40477-S	40478-S	40479-S	40480-S	40481-S	40482-S	40483-S	40484-S
1 3/4		40487-S	40488-S	40489-S	40490-S	40491-S	40492-S	40493-S	40494-S	40495-S	40496-S	40497-S

NOTES: For General Specifications see Page D-950.01. For Finishes see Section "Z" Addendum.
MATERIAL: Steel, case hardened.
H^1, J^1 and T^1 show dimensions for standard length screws only. (Part Numbers shown below solid line.)
H^2, J^2 and T^2 show dimensions for short length undercut head screws only. (Part Numbers shown above solid line.)
Screws longer than 8 pitches in length (Part Numbers shown below double lines) shall have a taper length "Z" of 3-1/2 to 4-1/2 times the pitch distance. (See General Specifications.)
Screws 8 pitches or shorter in length (Part Numbers shown above double line) shall have a taper length "Z" of 2-1/2 to 3-1/2 times the pitch distance. (See General Specifications.)

FORD MOTOR COMPANY
STANDARD PARTS

TAPPING SCREWS
OVAL HEAD

SLOTTED
TYPES D, F, & G

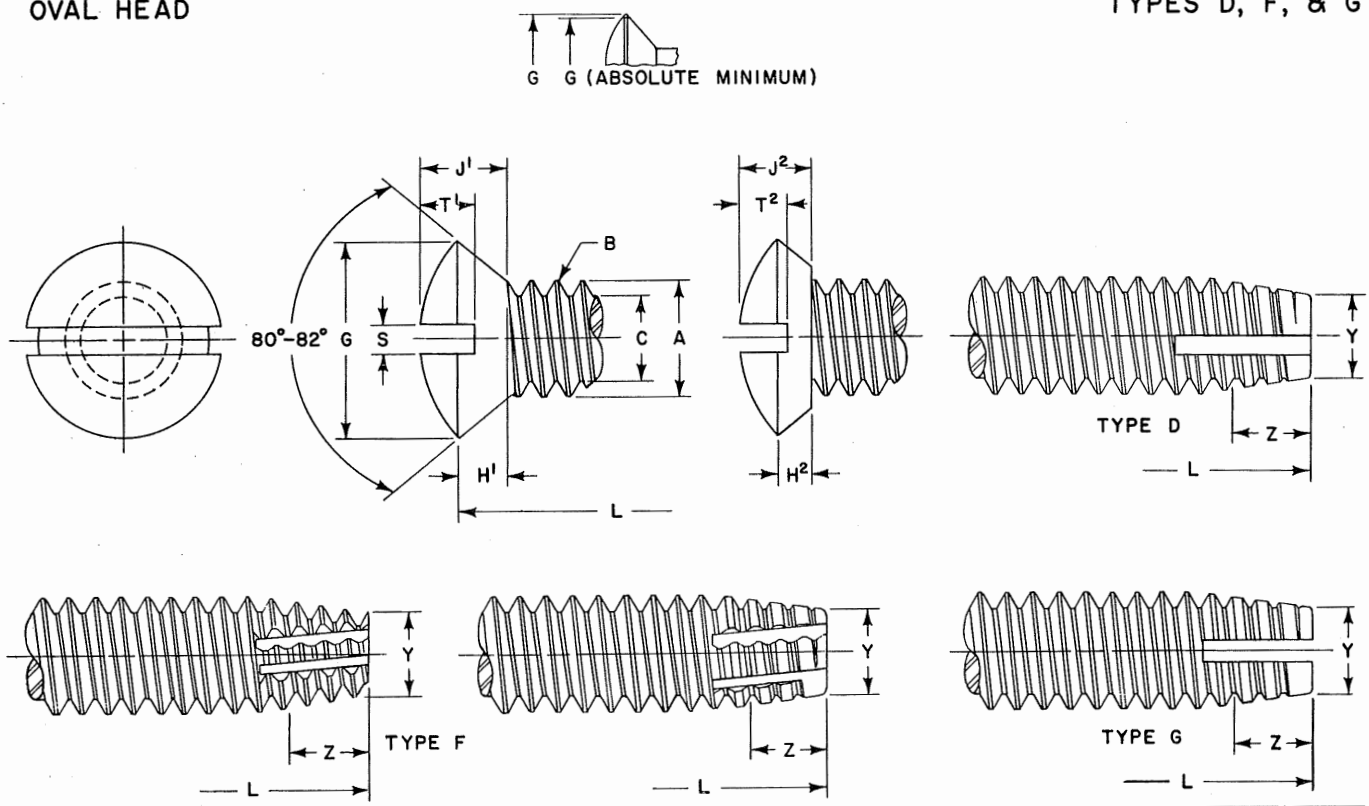

	Screw Size	6	8	10		12	1/4		5/16		3/8	
B	Threads Per Inch	32	32	24	32	24	20	28	18	24	16	24
A	Major Dia. of Thread	.1380 .1326	.1640 .1586	.1900 .1834	.1900 .1846	.2160 .2094	.2500 .2428	.2500 .2438	.3125 .3043	.3125 .3059	.3750 .3660	.3750 .3684
C	Minor Dia. of Thread (Max.)	.0997	.1257	.1389	.1517	.1649	.1887	.2062	.2443	.2614	.2983	.3239
G	Head Dia. (Max. Sharp) (Min. Sharp) (Abs. Min.)	.279 .257 .244	.332 .308 .292	.385 .359 .340	.385 .359 .340	.438 .410 .389	.507 .477 .452	.507 .477 .452	.635 .600 .568	.635 .600 .568	.762 .722 .685	.762 .722 .685
H^1	Side Height (Ref.)	.083	.100	.116	.116	.132	.153	.153	.191	.191	.230	.230
H^2	Side Height (Ref.)	.059	.070	.081	.081	.092	.107	.107	.134	.134	.161	.161
J^1	Total Head Height	.128 .105	.152 .126	.176 .148	.176 .148	.200 .169	.232 .197	.232 .197	.290 .249	.290 .249	.347 .300	.347 .300
J^2	Total Head Height	.104 .084	.123 .101	.142 .118	.142 .118	.161 .135	.186 .158	.186 .158	.232 .198	.232 .198	.278 .239	.278 .239
S	Slot Width	.048 .039	.054 .045	.060 .050	.060 .050	.067 .056	.075 .064	.075 .064	.084 .072	.084 .072	.094 .081	.094 .081
T^1	Slot Depth	.074 .060	.088 .072	.103 .084	.103 .084	.117 .096	.136 .112	.136 .112	.171 .141	.171 .141	.206 .170	.206 .170
T^2	Slot Depth	.065 .053	.078 .064	.090 .074	.090 .074	.103 .085	.119 .098	.119 .098	.149 .124	.149 .124	.179 .149	.179 .149
Y	Point Diameter	.106 .095	.132 .121	.147 .133	.158 .147	.173 .159	.198 .181	.213 .201	.255 .236	.269 .255	.310 .289	.332 .318
L	LENGTH	FORD PART NUMBERS										
1/4		41410-S	41411-S									
3/8		41423-S	41424-S	41425-S	41426-S	41427-S	41428-S	41429-S				
1/2		41436-S	41437-S	41438-S	41439-S	41440-S	41441-S	41442-S	41443-S	41444-S	41445-S	41446-S
5/8		41449-S	41450-S	41451-S	41452-S	41453-S	41454-S	41455-S	41456-S	41457-S	41458-S	41459-S
3/4		41462-S	41463-S	41464-S	41465-S	41466-S	41467-S	41468-S	41469-S	41470-S	41471-S	41472-S
7/8		41475-S	41476-S	41477-S	41478-S	41479-S	41480-S	41481-S	41482-S	41483-S	41484-S	41485-S
1		41488-S	41489-S	41490-S	41491-S	41492-S	41493-S	41494-S	41495-S	41496-S	41497-S	41498-S
1 1/4		41501-S	41502-S	41503-S	41504-S	41505-S	41506-S	41507-S	41508-S	41509-S	41510-S	41511-S
1 1/2		41514-S	41515-S	41516-S	41517-S	41518-S	41519-S	41520-S	41521-S	41522-S	41523-S	41524-S
1 3/4		41527-S	41528-S	41529-S	41530-S	41531-S	41532-S	41533-S	41534-S	41535-S	41536-S	41537-S

NOTES: For General Specifications see Page D-950.01. For Finishes see Section "Z" Addendum.
MATERIAL: Steel, case hardened.
H^1, J^1, and T^1 show dimensions for standard length screws only. (Part Numbers shown below solid lines.)
H^2, J^2, and T^2 show dimensions for short length undercut head screws only. (Part Numbers shown above solid lines.)
Screws longer than 8 pitches in length (Part Numbers shown below double line) shall have a taper length "Z" of 3-1/2 to 4-1/2 times the pitch distance. (See General Specifications.)
Screws 8 pitches or shorter in length (Part Numbers shown above double line) shall have a taper length "Z" of 2-1/2 to 3-1/2 times the pitch distance. (See General Specifications.)

FORD MOTOR COMPANY
STANDARD PARTS

TAPPING SCREWS
OVAL HEAD

CROSS RECESSED
TYPE A

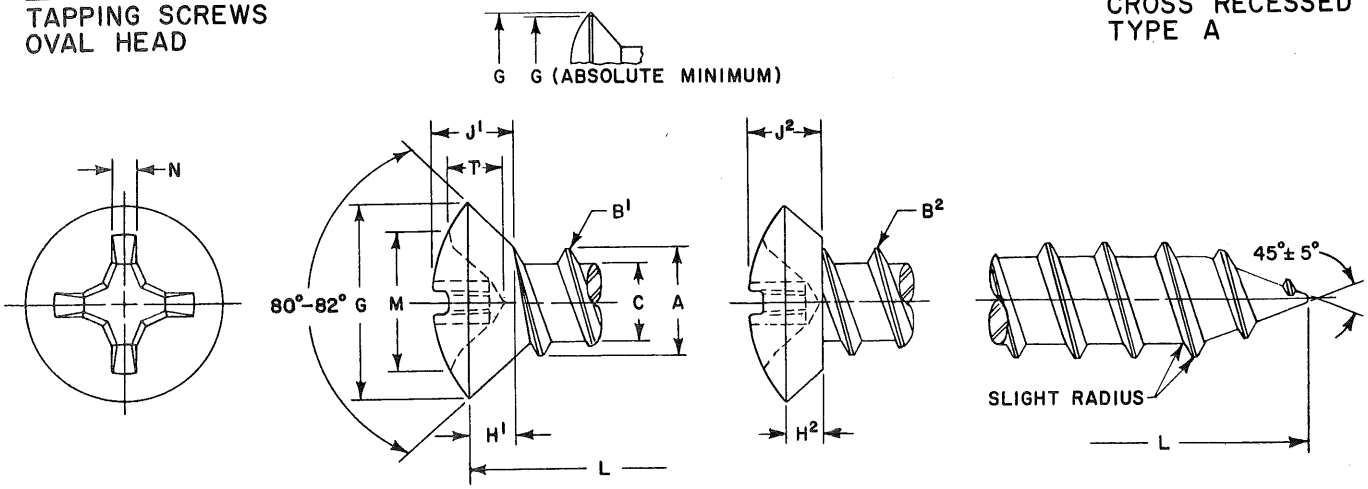

	Screw Size	4	5	6	7	8	10	12	14
B^1	Threads Per Inch	24	20	18	16	15	12	11	10
B^2	Threads Per Inch	24	20	20	19	18	16	14	14
A	Major Dia. of Thread	.114 .110	.130 .126	.141 .136	.158 .152	.168 .162	.194 .188	.221 .215	.254 .248
C	Minor Dia. of Thread	.083 .078	.095 .090	.102 .096	.114 .108	.123 .116	.133 .126	.162 .155	.185 .178
G	Head Dia. (Max. Sharp) (Min. Sharp) (Abs. Min.)	.225 .207 .195	.252 .232 .220	.279 .257 .244	.305 .283 .268	.332 .308 .292	.385 .359 .340	.438 .410 .389	.491 .461 .437
H^1	Side Height	.067	.075	.083	.091	.100	.116	.132	.148
H^2	Side Height	.047	.053	.059	.064	.070	.081	.092	.104
J^1	Total Head Height	.104 .084	.116 .095	.128 .105	.140 .116	.152 .126	.176 .148	.200 .169	.224 .190
J^2	Total Head Hieght	.084 .067	.094 .076	.104 .084	.113 .093	.123 .101	.142 .118	.161 .135	.180 .152
M	Recess Diameter	.136 .123	.158 .145	.178 .165	.183 .170	.192 .179	.209 .196	.270 .257	.288 .275
T	Recess Depth	.094 .077	.085 .061	.105 .080	.111 .086	.119 .095	.137 .113	.152 .128	.165 .140
N	Recess Width	.019	.028	.030	.030	.031	.033	.038	.039
	Driver Size	1	2	2	2	2	2	3	3
	Penetration Gaging Depth	.087 .070	.074 .050	.094 .069	.100 .075	.108 .084	.126 .102	.135 .111	.148 .123
L	LENGTH	FORD PART NUMBERS							
	1/4	52331-S							
	3/8	52334-S	52335-S	52336-S	52337-S	52338-S			
	1/2	52340-S	52341-S	52342-S	52343-S	52344-S	52345-S	52346-S	52347-S
	5/8	52348-S	52349-S	52350-S	52351-S	52352-S	52353-S	52354-S	52355-S
	3/4	52356-D 52364-S	52357-S 52365-S	52358-S 52366-S	52359-S 52367-S	52360-S 52368-S	52361-S 52369-S	52362-S 52370-S	52363-S 52371-S
	7/8								
	1	52372-S	52373-S	52374-S	52375-S	52376-S	52377-S	52378-S	52379-S
	1 1/4			52380-S	52381-S	52382-S	52383-S	52384-S	52385-S
	1 1/2			52386-S	52387-S	52388-S	52389-S	52390-S	52391-S
	1 3/4					52392-S	52393-S	52394-S	52395-S

NOTES: For General Specifications see Page D-950.01. For Finishes see Section "Z" Addendum.
MATERIAL: Steel, case hardened.
B^1, H^1, and J^1 show dimensions and number of threads for standard length screws only. (Part Numbers shown below double lines.)
B^2, H^2, and J^2 show dimensions and number of threads for short length undercut head screws only. (Part Numbers shown above double lines.) Recess penetration gaging values are shown above. For method and gaging equipment see Section "Z" Addendum.

FORD MOTOR COMPANY
STANDARD PARTS

TAPPING SCREWS OVAL HEAD

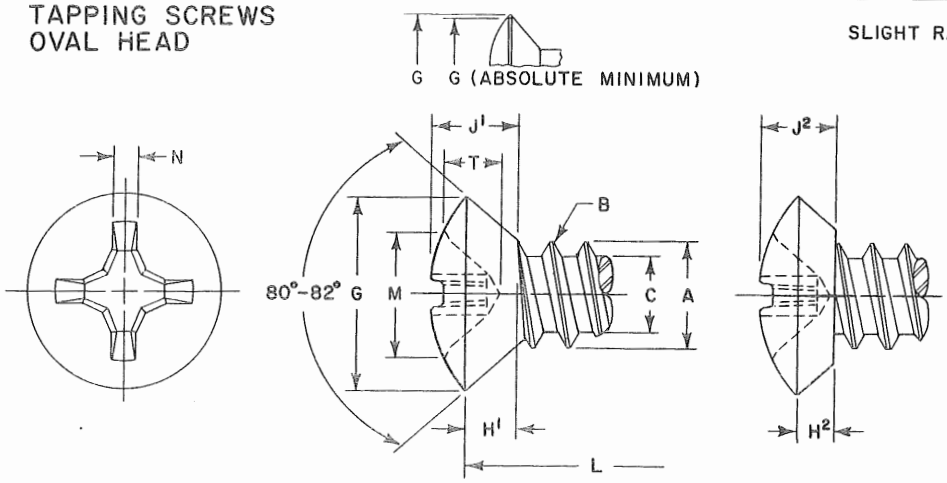

CROSS RECESSED TYPES B & BP

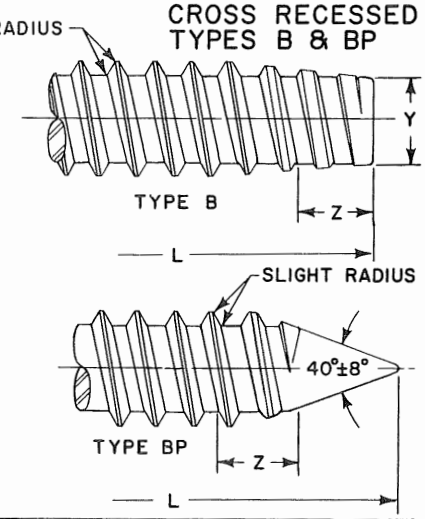

	Screw Size	4	5	6	7	8	10	12	1/4
B	Threads Per Inch	24	20	20	19	18	16	14	14
A	Major Dia. of Thread	.114 .110	.130 .126	.139 .135	.154 .149	.166 .161	.189 .183	.215 .209	.246 .240
C	Minor Dia. of Thread	.086 .082	.094 .090	.104 .099	.115 .109	.122 .116	.141 .135	.164 .157	.192 .185
G	Head Dia. (Max. Sharp) (Min. Sharp) (Abs. Min.)	.225 .207 .195	.252 .232 .220	.279 .257 .244	.305 .283 .268	.332 .308 .292	.385 .359 .340	.438 .410 .389	.507 .477 .452
H^1	Side Height (Ref.)	.067	.075	.083	.091	.100	.116	.132	.153
H^2	Side Height (Ref.)	.047	.053	.059	.064	.070	.081	.092	.107
J^1	Total Head Height	.104 .084	.116 .095	.128 .105	.140 .116	.152 .126	.176 .148	.200 .169	.232 .197
J^2	Total Head Height	.084 .067	.094 .076	.104 .084	.113 .093	.123 .101	.142 .118	.161 .135	.186 .158
M	Recess Diameter	.136 .123	.158 .145	.178 .165	.183 .170	.192 .179	.209 .196	.270 .257	.290 .277
T	Recess Depth	.094 .077	.085 .061	.105 .080	.111 .086	.119 .095	.137 .113	.152 .128	.173 .148
N	Recess Width	.019	.028	.030	.030	.031	.033	.038	.040
	Driver Size	1	2	2	2	2	2	3	3
	Penetration Gaging Depth	.087 .070	.074 .050	.094 .069	.100 .075	.108 .084	.126 .102	.135 .111	.156 .131
Y	Point Diameter	.079 .074	.087 .082	.095 .089	.105 .099	.112 .106	.130 .123	.152 .145	.179 .171
L	LENGTH	FORD PART NUMBERS					TYPE B		
1/4		52400-S	52401-S	52402-S					
3/8		52403-S	52404-S	52405-S	52406-S	52407-S	52408-S		
1/2		52409-S	52410-S	52411-S	52412-S	52413-S	52414-S	52415-S	52416-S
5/8		52417-S	52418-S	52419-S	52420-S	52421-S	52422-S	52423-S	52424-S
3/4		52425-S	52426-S	52427-S	52428-S	52429-S	52430-S	52431-S	52432-S
7/8		52433-S	52434-S	52435-S	52436-S	52437-S	52438-S	52439-S	52440-S
1		52441-S	52442-S	52443-S	52444-S	52445-S	52446-S	52447-S	52448-S
1 1/4							52449-S	52450-S	52451-S
1 1/2							52452-S	52453-S	52454-S
1 3/4							52455-S	52456-S	52457-S
L	LENGTH	FORD PART NUMBERS					TYPE BP		
1/4		52461-S							
3/8		52464-S	52465-S	52466-S	52467-S	52468-S			
1/2		52470-S	52471-S	52472-S	52473-S	52474-S	52475-S	52476-S	52477-S
5/8		52478-S	52479-S	52480-S	52481-S	52482-S	52483-S	52484-S	52485-S
3/4		52486-S	52487-S	52488-S	52489-S	52490-S	52491-S	52492-S	52493-S
7/8		52494-S	52495-S	52496-S	52497-S	52498-S	52499-S	52500-S	52501-S
1		52502-S	52503-S	52504-S	52505-S	52506-S	52507-S	52508-S	52509-S
1 1/4				52510-S	52511-S	52512-S	52513-S	52514-S	52515-S
1 1/2				52516-S	52517-S	52518-S	52519-S	52520-S	52521-S
1 3/4						52522-S	52523-S	52524-S	52525-S

NOTES: For General Specifications see Page D-950.01. For Finishes see Section "Z" Addendum.
MATERIAL: Steel, case hardened.
H^1, and J^1 show dimensions for standard length screws only. (Part Numbers shown below double line). H^2, and J^2 show dimensions for short length undercut head screws only. (Part Numbers shown above double line). Screw lengths greater than "short length" series, (Part Numbers shown below double lines) shall have a taper length "Z" of 2- to 2-1/2 times the pitch distance. (See General Specifications). Short length undercut head screws (Part Numbers shown above double lines) shall have a taper length "Z" of 1-1/2 to 2- times the pitch distance. (See General Specifications).
Type BP short length screws (Part Numbers shown above double lines) are impractical to manufacture.
Recess penetration gaging values are shown above. For method and gaging equipment see Section "Z" Addendum.

FORD MOTOR COMPANY
STANDARD PARTS

TAPPING SCREWS
OVAL HEAD

CROSS RECESSED
TYPE C

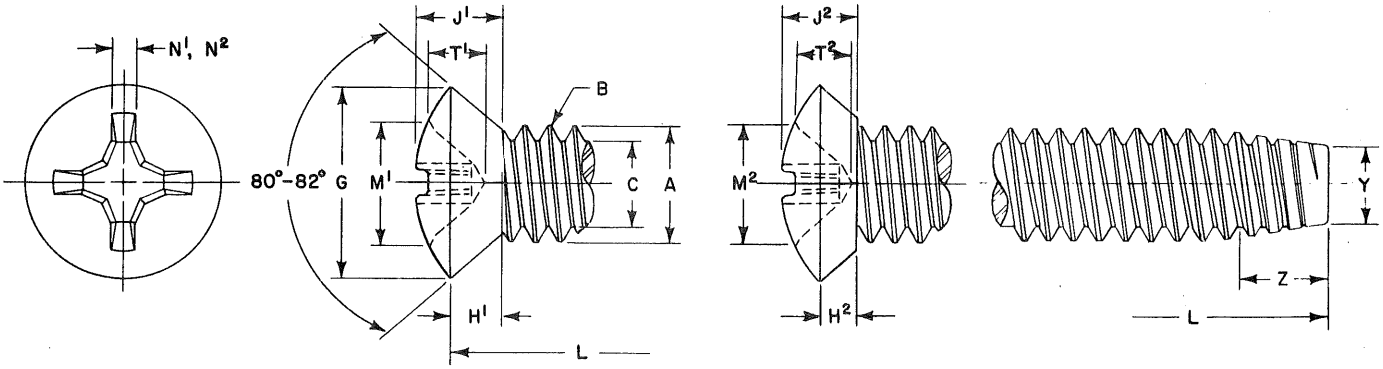

	Screw Size	6	8	10		12	1/4		5/16		3/8	
B	Threads Per Inch	32	32	24	32	24	20	28	18	24	16	24
A	Major Dia. of Thread	.1380 .1326	.1640 .1586	.1900 .1834	.1900 .1846	.2160 .2094	.2500 .2428	.2500 .2438	.3125 .3043	.3125 .3059	.3750 .3660	.3750 .3684
C	Minor Dia. of Thread (Max.)	.0997	.1257	.1389	.1517	.1649	.1887	.2062	.2443	.2614	.2983	.3239
G	Head Dia. (Max. Sharp) (Min. Sharp) (Abs. Min.)	.279 .257 .244	.332 .308 .292	.385 .359 .340	.385 .359 .340	.438 .410 .389	.507 .477 .452	.507 .477 .452	.635 .600 .568	.635 .600 .568	.762 .722 .685	.762 .722 .685
H^1	Side Height (Ref.)	.083	.100	.116	.116	.132	.153	.153	.191	.191	.230	.230
H^2	Side Height (Ref.)	.059	.070	.081	.081	.092	.107	.107	.134	.134	.161	.161
J^1	Total Head Height	.128 .105	.152 .126	.176 .148	.176 .148	.200 .169	.232 .197	.232 .197	.290 .249	.290 .249	.347 .300	.347 .300
J^2	Total Head Height	.104 .084	.123 .101	.142 .118	.142 .118	.161 .135	.186 .158	.186 .158	.232 .198	.232 .198	.278 .239	.278 .239
M^1	Recess Diameter	.178 .165	.192 .179	.209 .196	.209 .196	.270 .257	.290 .277	.290 .277	.390 .377	.390 .377	.410 .397	.410 .397
M^2	Recess Diameter	.178 .165	.192 .179	.209 .196	.209 .196	.270 .257	.290 .277	.290 .277	.381 .368	.381 .368	.400 .387	.400 .387
T^1	Recess Depth	.105 .080	.119 .095	.137 .113	.137 .113	.152 .128	.173 .148	.173 .148	.238 .214	.238 .214	.257 .233	.257 .233
T^2	Recess Depth	.105 .080	.119 .095	.137 .113	.137 .113	.152 .128	.173 .148	.173 .148	.226 .202	.226 .202	.245 .221	.245 .221
N^1	Recess Width	.030	.031	.033	.033	.038	.040	.040	.065	.065	.068	.068
N^2	Recess Width	.030	.031	.033	.033	.038	.040	.040	.064	.064	.066	.066
	Driver Size	2	2	2	2	3	3	3	4	4	4	4
	Penetration Gaging Depth	.094 .069	.108 .084	.126 .102	.126 .102	.135 .111	.156 .131	.156 .131	.218 .194	.218 .194	.237 .213	.237 .213
	Penetration Gaging Depth	.094 .069	.108 .084	.126 .102	.126 .102	.135 .111	.156 .131	.156 .131	.206 .182	.206 .182	.225 .201	.225 .201
Y	Point Diameter	.106 .095	.132 .121	.147 .133	.158 .147	.173 .159	.198 .181	.213 .201	.255 .236	.269 .255	.310 .289	.332 .318
L	LENGTH	FORD PART NUMBERS										
1/4		51445-S	51446-S									
3/8		51450-S	51451-S	51452-S	51453-S	51454-S	51455-S	51456-S				
1/2		51459-S	51460-S	51461-S	51462-S	51463-S	51464-S	51465-S	51466-S	51467-S	51468-S	51469-S
5/8		51470-S	51471-S	51472-S	51473-S	51474-S	51475-S	51476-S	51477-S	51478-S	51479-S	51480-S
3/4		51481-S	51482-S	51483-S	51484-S	51485-S	51486-S	51487-S	51488-S	51489-S	51490-S	51491-S
7/8		51492-S	51493-S	51494-S	51495-S	51496-S	51497-S	51498-S	51499-S	51500-S	51501-S	51502-S
1		51503-S	51504-S	51505-S	51506-S	51507-S	51508-S	51509-S	51510-S	51511-S	51512-S	51513-S
1 1/4		51514-S	51515-S	51516-S	51517-S	51518-S	51519-S	51520-S	51521-S	51522-S	51523-S	51524-S
1 1/2		51525-S	51526-S	51527-S	51528-S	51529-S	51530-S	51531-S	51532-S	51533-S	51534-S	51535-S
1 3/4			51536-S	51537-S	51538-S	51539-S	51540-S	51541-S	51542-S	51543-S	51544-S	51545-S

NOTES: For General Specifications see Page D-950.01..For Finishes see Section "Z" Addendum.
MATERIAL: Steel - case hardened.
H^1, J^1, M^1, T^1, and N^1, show dimensions for standard length screws only. (Part Numbers shown below solid line.)
H^2, J^2, M^2, T^2, and N^2, show dimensions for short length undercut head screws only. (Part Numbers shown above solid line.)
Screws longer than 8 pitches in length (Part Numbers shown below double lines) shall have a taper length "Z" of 3-1/2 to 4-1/2 times the pitch distance. (See General Specifications).
Screws 9 pitches or shorter in length (Part Numbers shown above double lines) shall have a taper length "Z" of 2-1/2 to 3-1/2 times the pitch distance. (See General Specifications).
Recess penetration gaging values are shown above. For method and gaging equipment see Section "Z" Addendum.

FORD MOTOR COMPANY
STANDARD PARTS

TAPPING SCREWS
OVAL HEAD

CROSS RECESSED
TYPES D, F, & G

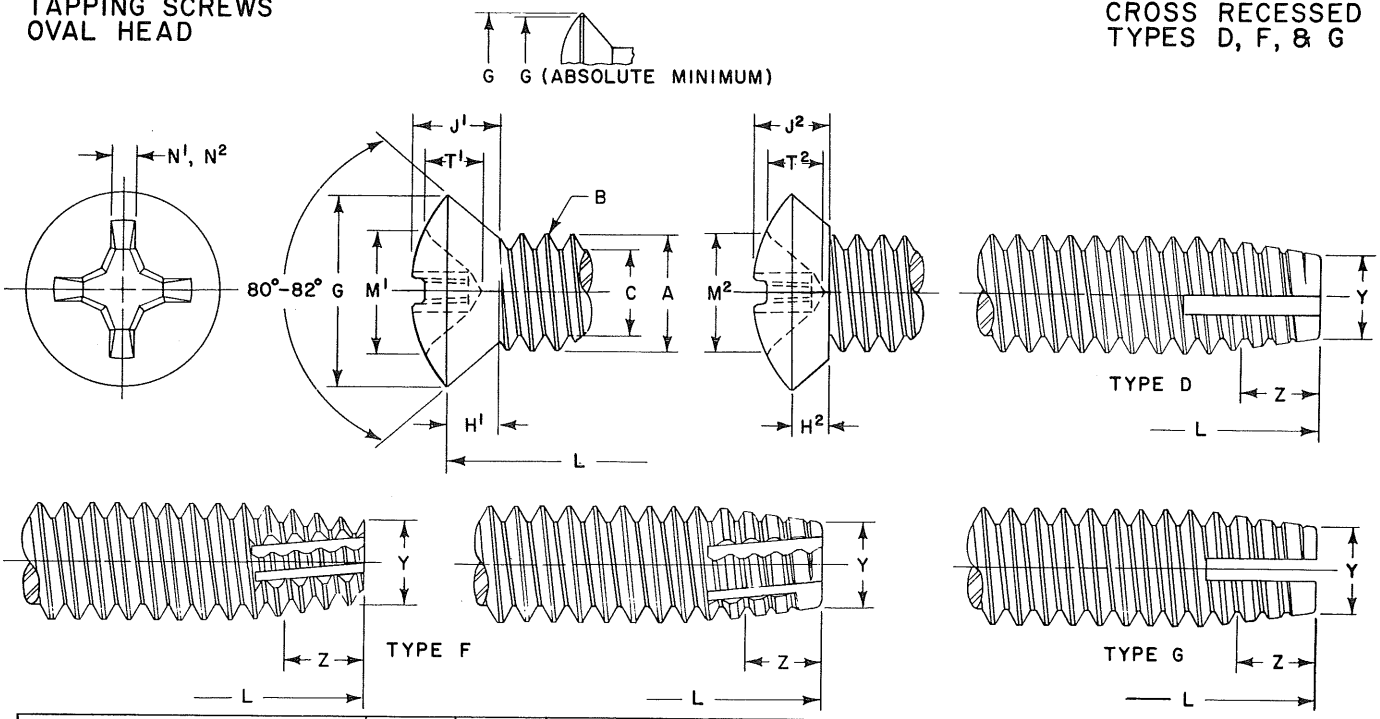

	Screw Size	6	8	10		12	1/4		5/16		3/8	
B	Threads Per Inch	32	32	24	32	24	20	28	18	24	16	24
A	Major Dia. of Thread	.1380 .1326	.1640 .1586	.1900 .1834	.1900 .1846	.2160 .2094	.2500 .2428	.2500 .2438	.3125 .3043	.3125 .3059	.3750 .3660	.3750 .3684
C	Minor Dia. of Thread (Max.)	.0997	.1257	.1389	.1517	.1649	.1887	.2062	.2443	.2614	.2983	.3239
G	Head Dia. (Max. Sharp) (Min. Sharp) (Abs. Min.)	.279 .257 .244	.332 .308 .292	.385 .359 .340	.385 .359 .340	.438 .410 .389	.507 .477 .452	.507 .477 .452	.635 .600 .568	.635 .600 .568	.762 .722 .685	.762 .722 .685
H^1	Side Height (Ref.)	.083	.100	.116	.116	.132	.153	.153	.191	.191	.230	.230
H^2	Side Height (Ref.)	.059	.070	.081	.081	.092	.107	.107	.134	.134	.161	.161
J^1	Total Head Height	.128 .105	.152 .126	.176 .148	.176 .148	.200 .169	.232 .197	.232 .197	.290 .249	.290 .249	.347 .300	.347 .300
J^2	Total Head Height	.104 .084	.123 .101	.142 .118	.142 .118	.161 .135	.186 .158	.186 .158	.232 .198	.232 .198	.278 .239	.278 .239
M^1	Recess Diameter	.178 .165	.192 .179	.209 .196	.209 .196	.270 .257	.290 .277	.290 .277	.390 .377	.390 .377	.410 .397	.410 .397
M^2	Recess Diameter	.178 .165	.192 .179	.209 .196	.209 .196	.270 .257	.290 .277	.290 .277	.381 .368	.381 .368	.400 .387	.400 .387
T^1	Recess Depth	.105 .080	.119 .095	.137 .113	.137 .113	.152 .128	.173 .148	.173 .148	.238 .214	.238 .214	.257 .233	.257 .233
T^2	Recess Depth	.105 .080	.119 .095	.137 .113	.137 .113	.152 .128	.173 .148	.173 .148	.226 .202	.226 .202	.245 .221	.245 .221
N^1	Recess Width	.030	.031	.033	.033	.038	.040	.040	.065	.065	.068	.068
N^2	Recess Width	.030	.031	.033	.033	.038	.040	.040	.064	.064	.066	.066
	Driver Size	2	2	2	2	3	3	3	4	4	4	4
	Penetration Gaging Depth	.094 .069	.108 .084	.126 .102	.126 .102	.135 .111	.156 .131	.156 .131	.218 .194	.218 .194	.237 .213	.237 .213
	Penetration Gaging Depth	.094 .069	.108 .084	.126 .102	.126 .102	.135 .111	.156 .131	.156 .131	.206 .182	.206 .182	.225 .201	.225 .201
Y	Point Diameter	.106 .095	.132 .121	.147 .133	.158 .147	.173 .159	.198 .181	.213 .201	.255 .236	.269 .255	.310 .289	.332 .318
L	LENGTH	FORD PART NUMBERS										
1/4		52900-S	52901-S									
3/8		52905-S	52906-S	52907-S	52908-S	52909-S	52910-S	52911-S				
1/2		52914-S	52915-S	52916-S	52917-S	52918-S	52919-S	52920-S	52921-S	52922-S	52923-S	52924-S
5/8		52925-S	52926-S	52927-S	52928-S	52929-S	52930-S	52931-S	52932-S	52933-S	52934-S	52935-S
3/4		52936-S	52937-S	52938-S	52939-S	52940-S	52941-S	52942-S	52943-S	52944-S	52945-S	52946-S
7/8		52947-S	52948-S	52949-S	52950-S	52951-S	52952-S	52953-S	52954-S	52955-S	52956-S	52957-S
1		52958-S	51400-S	52959-S	52960-S	52961-S	52962-S	52963-S	52964-S	52965-S	52966-S	52967-S
1 1/4		52968-S	51411-S	52969-S	52970-S	52971-S	52972-S	52973-S	52974-S	52975-S	52976-S	52977-S
1 1/2		52978-S	51422-S	52979-S	52980-S	52981-S	52982-S	52983-S	52984-S	52985-S	52986-S	52987-S
1 3/4			52988-S	52989-S	52990-S	52991-S	52992-S	52993-S	52994-S	52995-S	52996-S	52997-S

NOTES: For General Specifications see Page D-950.01. For Finishes see Section "Z" Addendum.
MATERIAL: Steel- case hardened.
H^1, J^1, M^1, T^1, and N^1 show dimensions for standard length screws only. (Part Numbers shown below solid line.)
H^2, J^2, M^2, T^2, and N^2 show dimensions for short length undercut head screws only. (Part Numbers shown above solid line.)
Screws longer than 8 pitches in length (Part Numbers shown below double line) shall have a taper length "Z" of 3-1/2 to 4-1/2 times the pitch distance. (See General Specifications.)
Screws 8 pitches or shorter in length (Part Numbers shown above double line) shall have a taper length "Z" of 2-1/2 to 3-1/2 times the pitch distance. (See General Specifications.)
Recess penetration gaging values are shown above. For method and gaging equipment see Section "Z" Addendum.

PRINTED IN U.S.A.

FORD MOTOR COMPANY
STANDARD PARTS

TAPPING SCREWS
OVAL TRIM HEAD

CROSS RECESSED
TYPE A

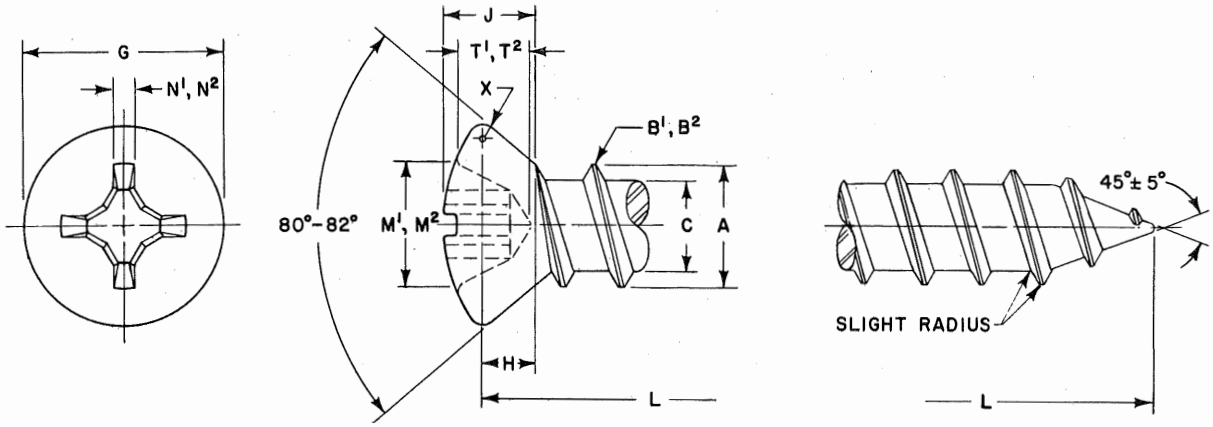

	Screw Size — Body	4	5	6		8		10	12		14	
	Head	3	4	4	5	5	6	8	8	10	10	12
B^1	Threads Per Inch	24	20	18	18	15	15	12	11	11	10	10
B^2	Threads Per Inch	24	20	20	20	18	18	16	14	14	14	14
A	Major Dia. of Thread	.114 .110	.130 .126	.141 .136	.141 .136	.168 .162	.168 .162	.194 .188	.221 .215	.221 .215	.254 .248	.254 .248
C	Minor Dia. of Thread	.083 .078	.095 .090	.102 .096	.102 .096	.123 .116	.123 .116	.133 .126	.162 .155	.162 .155	.185 .178	.185 .178
G	Head Diameter	.199 .181	.225 .207	.225 .207	.252 .232	.252 .232	.279 .257	.332 .308	.332 .308	.385 .359	.385 .359	.438 .410
X	Radius	.014	.017	.017	.019	.019	.021	.025	.025	.029	.029	.033
H	Side Height (Ref.)	.057	.066	.058	.075	.060	.076	.094	.078	.111	.091	.124
J	Total Head Height	.086 .074	.099 .086	.091 .079	.112 .098	.096 .083	.117 .102	.141 .124	.125 .109	.166 .148	.146 .129	.187 .167
M^1	Recess Diameter	.124 .111	.136 .123	.136 .123	.158 .145	.158 .145	.178 .165	.192 .179	.192 .179	.209 .196	.209 .196	.270 .257
M^2	Recess Diameter	.124 .111	.136 .123	.136 .123	.169 .156	.169 .156	.194 .181	.207 .194	.207 .194	.220 .207	.220 .207	.270 .257
T^1	Recess Depth	.081 .064	.094 .077	.094 .077	.085 .061	.085 .061	.105 .080	.119 .095	.119 .095	.137 .113	.137 .113	.152 .128
T^2	Recess Depth	.081 .064	.094 .077	.094 .077	.096 .072	.096 .072	.121 .096	.135 .110	.135 .110	.148 .123	.148 .123	.152 .128
N^1	Recess Width (Min.)	.019	.019	.019	.028	.028	.030	.031	.031	.033	.033	.038
N^2	Recess Width (Min.)	.019	.019	.019	.028	.028	.031	.031	.031	.033	.033	.038
	Driver Size	1	1	1	2	2	2	2	2	2	2	3
	Penetration Gaging Depth	.074 .057	.087 .070	.087 .070	.074 .050	.074 .050	.094 .069	.108 .084	.108 .084	.126 .102	.126 .102	.135 .111
	Penetration Gaging Depth	.074 .057	.087 .070	.087 .070	.085 .061	.085 .061	.110 .085	.124 .099	.124 .099	.137 .112	.137 .112	.135 .111
L	LENGTH	FORD PART NUMBERS										
1/4		53000-S	53001-S	53002-S								
3/8		53003-S	53004-S	53005-S	53006-S	53007-S	53008-S	53009-S	53010-S			
1/2		53011-S	53012-S	53013-S	53014-S	53015-S	53016-S	53017-S	53018-S	53019-S	53020-S	53021-S
5/8		53022-S	53023-S	53024-S	53025-S	53026-S	53027-S	53028-S	53029-S	53030-S	53031-S	53032-S
3/4 7/8		53033-S 53044-S	53034-S 53045-S	53035-S 53046-S	53036-S 53047-S	53037-S 53048-S	53038-S 53049-S	53039-S 53050-S	53040-S 53051-S	53041-S 53052-S	53042-S 53053-S	53043-S 53054-S
1		53055-S	53056-S	53057-S	53058-S	53059-S	53060-S	53061-S	53062-S	53063-S	53064-S	53065-S
1 1/4 1 1/2 1 3/4							53066-S 53072-S	53067-S 53073-S 53078-S	53068-S 53074-S 53079-S	53069-S 53075-S 53080-S	53070-S 53076-S 53081-S	53071-S 53077-S 53082-S

NOTES: For General Specifications see Page D-950.01. For Finishes see Section "Z" Addendum.
MATERIAL: Steel, case hardened.
B^1 shows number of threads for standard length screws only. (Part Numbers shown below double lines).
B^2 shows number of threads for short length screws only. (Part Numbers shown above double lines).
M^1, T^1, and N^1 show recess dimensions for screws 1- inch in length and under except for sizes 14 x 10-10 and 14 x 12-10 which is 2- inch in length and under. (Part Numbers shown above solid line).
M^2, T^2, and N^2 show recess dimensions for screws over 1- inch in length except for sizes 14 x 10-10 and 14 x 12-10 which is over 2- inch in length. (Part Numbers shown below solid line).
Recess penetration gaging values are shown above. For method, gage tolerances and gaging equipment see Section "Z" Addendum.

FORD MOTOR COMPANY
STANDARD PARTS

TAPPING SCREWS
OVAL TRIM HEAD

CROSS RECESSED
TYPE C

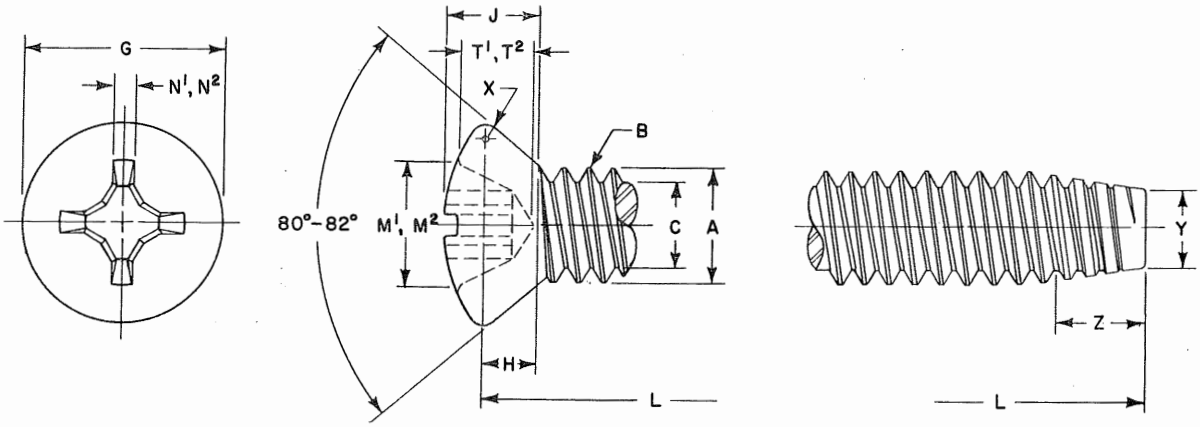

	Screw Size — Body	6		8		10		12	
	Head	4	5	5	6	8		8	10
B	Threads Per Inch	32	32	32	32	24	32	24	24
A	Major Dia. of Thd.	.1380 .1326	.1380 .1326	.1640 .1586	.1640 .1586	.1900 .1834	.1900 .1846	.2160 .2094	.2160 .2094
C	Minor Dia. of Thd. (Max.)	.0997	.0997	.1257	.1257	.1389	.1517	.1649	.1649
G	Head Diameter	.225 .207	.252 .232	.252 .232	.279 .257	.332 .308	.332 .308	.332 .308	.385 .359
X	Radius (Ref.)	.017	.019	.019	.021	.025	.025	.025	.029
H	Side Height (Ref.)	.058	.075	.060	.076	.094	.094	.078	.111
J	Total Head Height	.091 .079	.112 .098	.096 .083	.117 .102	.141 .124	.141 .124	.125 .109	.166 .148
M¹	Recess Diameter	.136 .123	.158 .145	.158 .145	.178 .165	.192 .179	.192 .179	.192 .179	.209 .196
M²	Recess Diameter	.136 .123	.169 .156	.169 .156	.194 .181	.207 .194	.207 .194	.207 .194	.220 .207
T¹	Recess Depth	.094 .077	.085 .061	.085 .061	.105 .080	.119 .095	.119 .095	.119 .095	.137 .113
T²	Recess Depth	.094 .077	.096 .072	.096 .072	.121 .096	.135 .110	.135 .110	.135 .110	.148 .123
N¹	Recess Width (Min.)	.019	.028	.028	.030	.031	.031	.031	.033
N²	Recess Width (Min.)	.019	.028	.028	.031	.031	.031	.031	.033
	Driver Size	1	2	2	2	2	2	2	2
	Penetration Gaging Depth	.087 .070	.074 .050	.074 .050	.094 .069	.108 .084	.108 .084	.108 .084	.126 .102
	Penetration Gaging Depth	.087 .070	.085 .061	.085 .061	.110 .085	.124 .099	.124 .099	.124 .099	.137 .112
Y	Point Diameter	.106 .095	.106 .095	.132 .121	.132 .121	.147 .133	.158 .147	.173 .159	.173 .159
L	LENGTH	FORD PART NUMBERS							
1/4		53083-S	53084-S	53085-S	53086-S	53087-S	53088-S	53089-S	
3/8		53090-S	53091-S	53092-S	53093-S	53094-S	53095-S	53096-S	53097-S
1/2 5/8 3/4 7/8		53098-S 53106-S 53114-S 53122-S	53099-S 53107-S 53115-S 53123-S	53100-S 53108-S 53116-S 53124-S	53101-S 53109-S 53117-S 53125-S	53102-S 53110-S 53118-S 53126-S	53103-S 53111-S 53119-S 53127-S	53104-S 53112-S 53120-S 53128-S	53105-S 53113-S 53121-S 53129-S
1		53130-S	53131-S	53132-S	53133-S	53134-S	53135-S	53136-S	53137-S
1 1/4 1 1/2 1 3/4		53138-S 53146-S	53139-S 53147-S	53140-S 53148-S	53141-S 53149-S	53142-S 53150-S 53154-S	53143-S 53151-S 53155-S	53144-S 53152-S 53156-S	53145-S 53153-S 53157-S

NOTES: For General Specifications see Page D-950.01. For Finishes see Section "Z" Addendum.
MATERIAL: Steel, case hardened.
Screws longer than 8 pitches in length (Part Numbers shown below double lines) shall have a taper length "Z" of 3-1/2 to 4-1/2 times the pitch distance. (See General Specifications).
Screws 8 pitches or shorter in length (Part Numbers shown above double lines) shall have a taper length "Z" of 2-1/2 to 3-1/2 times the pitch distance. (See General Specifications).
M^1, T^1, and N^1 show recess dimensions for screws 1- inch in length and under except for sizes 1/4 x 10-20 and 1/4 x 10-28 which is 2- inch in length and under. (Part Numbers shown above solid line).
M^2, T^2, and N^2 show recess dimensions for screws over 1- inch in length except for sizes 1/4 x 10-20 and 1/4 x 10-28 which is over 2- inch in length. (Part Numbers shown below solid line).
Recess penetration gaging values are shown above. For method, gage tolerances and gaging equipment see Section "Z" Addendum.

FORD MOTOR COMPANY
STANDARD PARTS

TAPPING SCREWS
OVAL TRIM HEAD

CROSS RECESSED
TYPE C

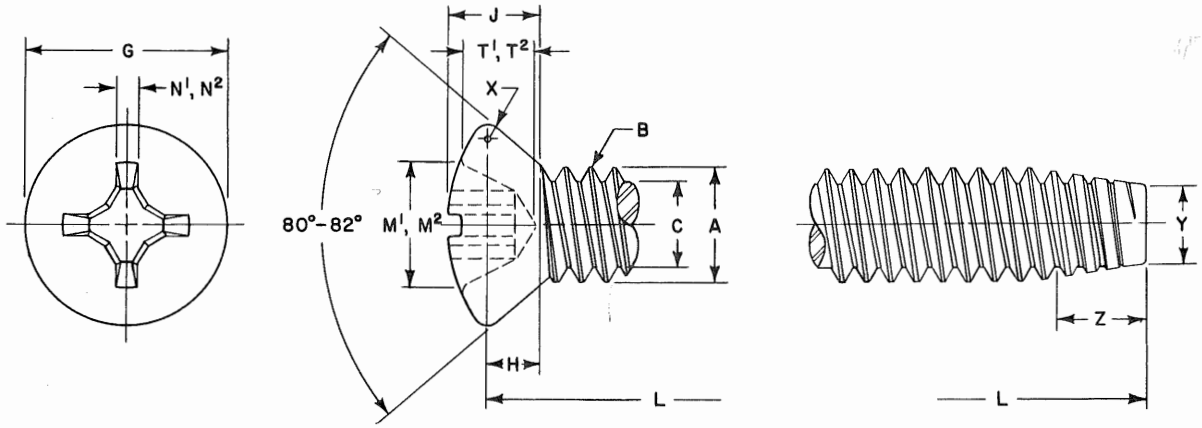

	Screw Size / Body	1/4				5/16				3/8	
	Head	10		12		12		1/4		5/16	
B	Threads Per Inch	20	28	20	28	18	24	18	24	16	24
A	Major Dia. of Thd.	.2500 .2428	.2500 .2438	.2500 .2428	.2500 .2438	.3125 .3043	.3125 .3059	.3125 .3043	.3125 .3059	.3750 .3660	.3750 .3684
C	Minor Dia. of Thd. (Max.)	.1887	.2062	.1887	.2062	.2443	.2614	.2443	.2614	.2983	.3239
G	Head Diameter	.385 .359	.385 .359	.438 .410	.438 .410	.438 .410	.438 .410	.507 .477	.507 .477	.635 .600	.635 .600
X	Radius (Ref.)	.029	.029	.033	.033	.033	.033	.038	.038	.048	.048
H	Side Height (Ref.)	.091	.091	.124	.124	.087	.087	.130	.130	.173	.173
J	Total Head Height	.146 .129	.146 .129	.187 .167	.187 .167	.150 .131	.150 .131	.202 .181	.202 .181	.265 .240	.265 .240
M¹	Recess Diameter	.209 .196	.209 .196	.270 .257	.270 .257	.270 .257	.270 .257	.290 .277	.290 .277	.390 .377	.390 .377
M²	Recess Diameter	.220 .207	.220 .207	.270 .257	.270 .257	.270 .257	.270 .257	.290 .277	.290 .277	.390 .377	.390 .377
T¹	Recess Depth	.137 .113	.137 .113	.152 .128	.152 .128	.152 .128	.152 .128	.173 .148	.173 .148	.238 .214	.238 .214
T²	Recess Depth	.148 .123	.148 .123	.152 .128	.152 .128	.152 .128	.152 .128	.173 .148	.173 .148	.238 .214	.238 .214
N¹	Recess Width (Min.)	.033	.033	.038	.038	.038	.038	.040	.040	.065	.065
N²	Recess Width (Min.)	.033	.033	.038	.038	.038	.038	.040	.040	.065	.065
	Driver Size	2	2	3	3	3	3	3	3	4	4
	Penetration Gaging Depth	.126 .102	.126 .102	.135 .111	.135 .111	.135 .111	.135 .111	.156 .131	.156 .131	.218 .194	.218 .194
	Penetration Gaging Depth	.137 .112	.137 .112	.135 .111	.135 .111	.135 .111	.135 .111	.156 .131	.156 .131	.218 .194	.218 .194
Y	Point Diameter	.198 .181	.213 .201	.198 .181.	.213 .201	.255 .236	.269 .255	.255 .236	.269 .255	.310 .289	.332 .318
L	LENGTH	FORD PART NUMBERS									
1/4											
3/8		53158-S	53159-S	53160-S	53161-S	53162-S	53163-S	53164-S	53165-S		
1/2		53166-S	53167-S	53168-S	53169-S	53170-S	53171-S	53172-S	53173-S	53174-S	53175-S
5/8		53176-S	53177-S	53178-S	53179-S	53180-S	53181-S	53182-S	53183-S	53184-S	53185-S
3/4		53186-S	53187-S	53188-S	53189-S	53190-S	53191-S	53192-S	53193-S	53194-S	53195-S
7/8		53196-S	53197-S	53198-S	53199-S	53200-S	53201-S	53202-S	53203-S	53204-S	53205-S
1		53206-S	53207-S	53208-S	53209-S	53210-S	53211-S	53212-S	53213-S	53214-S	53215-S
1 1/4		53216-S	53217-S	53218-S	53219-S	53220-S	53221-S	53222-S	53223-S	53224-S	53225-S
1 1/2		53226-S	53227-S	53228-S	53229-S	53230-S	53231-S	53232-S	53233-S	53234-S	53235-S
1 3/4		53236-S	53237-S	53238-S	53239-S	53240-S	53241-S	53242-S	53243-S	53244-S	53245-S

NOTES: For General Specifications see Page D-950.01. For Finishes see Section "Z" Addendum.
MATERIAL: Steel, case hardened.
Screws longer than 8 pitches in length (Part Numbers shown below double lines) shall have a taper length "Z" of 3-1/2 to 4-1/2 times the pitch distance. (See General Specifications).
Screws 8 pitches or shorter in length (Part Numbers shown above double lines) shall have a taper length "Z" of 2-1/2 to 3-1/2 times the pitch distance. (See General Specifications).
M^1, T^1, and N^1 show recess dimensions for screws 1- inch in length and under except for sizes 1/4 x 10-20 and 1/4 x 10-28 which is 2- inch in length and under. (Part Numbers shown above solid line).
M^2, T^2, and N^2 show recess dimensions for screws over 1- inch in length except for sizes 1/4 x 10-20 and 1/4 x 10-28 which is over 2- inch in length. (Part Numbers shown below solid line).
Recess penetration gaging values are shown above. For method, gage tolerances and gaging equipment see Section "Z" Addendum.

FORD MOTOR COMPANY
STANDARD PARTS

TAPPING SCREWS
OVAL TRIM HEAD

CROSS RECESSED
TYPES D, F, & G

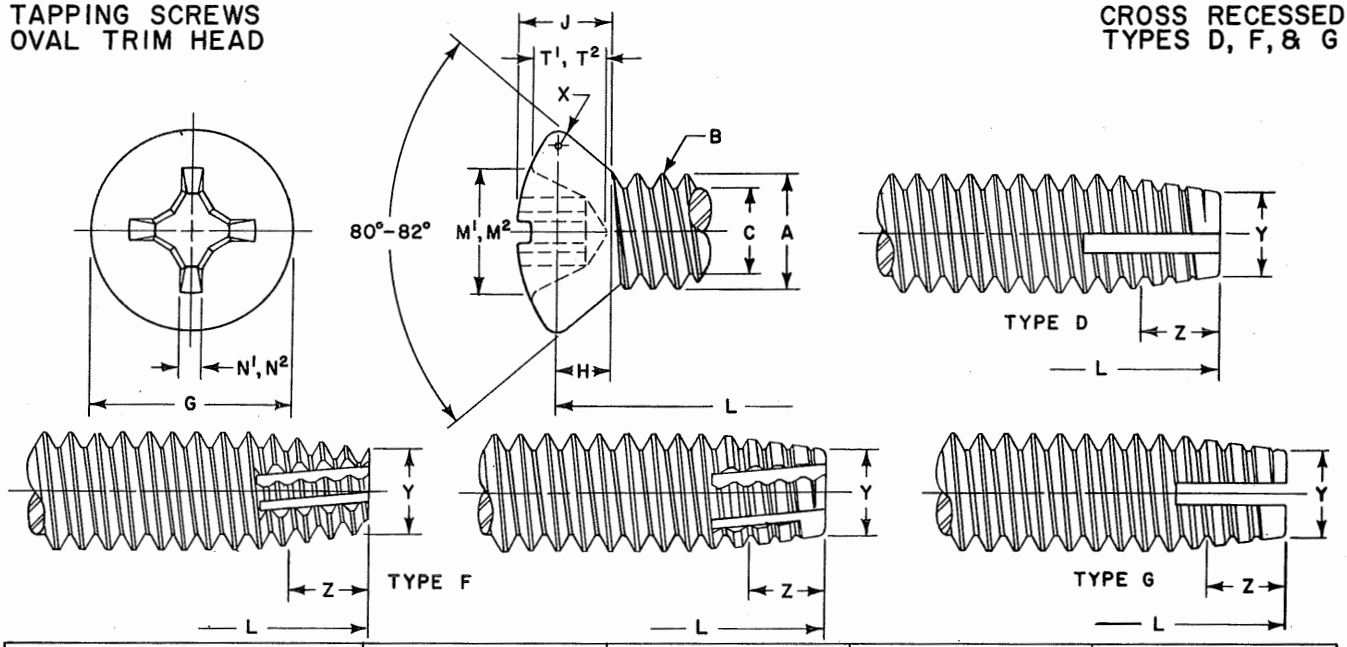

	Screw Size / Body	6		8		10		12	
	Head	4	5	5	6	8		8	10
B	Threads Per Inch	32	32	32	32	24	32	24	24
A	Major Dia. of Thd.	.1380 .1326	.1380 .1326	.1640 .1586	.1640 .1586	.1900 .1834	.1900 .1846	.2160 .2094	.2160 .2094
C	Minor Dia. of Thd. (Max.)	.0997	.0997	.1257	.1257	.1389	.1517	.1649	.1649
G	Head Diameter	.225 .207	.252 .232	.252 .232	.279 .257	.332 .308	.332 .308	.332 .308	.385 .359
X	Radius (Ref.)	.017	.019	.019	.021	.025	.025	.025	.029
H	Side Height (Ref.)	.058	.075	.060	.076	.094	.094	.078	.111
J	Total Head Height	.091 .079	.112 .098	.096 .083	.117 .102	.141 .124	.141 .124	.125 .109	.166 .148
M¹	Recess Diameter	.136 .123	.158 .145	.158 .145	.178 .165	.192 .179	.192 .179	.192 .179	.209 .196
M²	Recess Diameter	.136 .123	.169 .156	.169 .156	.194 .181	.207 .194	.207 .194	.207 .194	.220 .207
T¹	Recess Depth	.094 .077	.085 .061	.085 .061	.105 .080	.119 .095	.119 .095	.119 .095	.137 .113
T²	Recess Depth	.094 .077	.096 .072	.096 .072	.121 .096	.135 .110	.135 .110	.135 .110	.148 .123
N¹	Recess Width (Min.)	.019	.028	.028	.030	.031	.031	.031	.033
N²	Recess Width (Min.)	.019	.028	.028	.031	.031	.031	.031	.033
	Driver Size	1	2	2	2	2	2	2	2
	Penetration Gaging Depth	.087 .070	.074 .050	.074 .050	.094 .069	.108 .084	.108 .084	.108 .084	.126 .102
	Penetration Gaging Depth	.087 .070	.085 .061	.085 .061	.110 .085	.124 .099	.124 .099	.124 .099	.137 .112
Y	Point Diameter	.106 .095	.106 .095	.132 .121	.132 .121	.147 .133	.158 .147	.173 .159	.173 .159
L	LENGTH	FORD PART NUMBERS							
	1/4	53246-S	53247-S	53248-S	53249-S	53250-S	53251-S	53252-S	
	3/8	53253-S	53254-S	53255-S	53256-S	53257-S	53258-S	53259-S	53260-S
	1/2 5/8 3/4 7/8	53261-S 53269-S 53277-S 53285-S	53262-S 53270-S 53278-S 53286-S	53263-S 53271-S 53279-S 53287-S	53264-S 53272-S 53280-S 53288-S	53265-S 53273-S 53281-S 53289-S	53266-S 53274-S 53282-S 53290-S	53267-S 53275-S 53283-S 53291-S	53268-S 53276-S 53284-S 53292-S
	1	53293-S	53294-S	53295-S	53296-S	53297-S	53298-S	53299-S	53300-S
	1 1/4 1 1/2 1 3/4	53301-S 53309-S	53302-S 53310-S	53303-S 53311-S	53304-S 53312-S	53305-S 53313-S 53317-S	53306-S 53314-S 53318-S	53307-S 53315-S 53319-S	53308-S 53316-S 53320-S

NOTES: For General Specifications see Page D-950.01. For Finishes see Section "Z" Addendum.
MATERIAL: Steel, case hardened.
Screws longer than 8 pitches in length (Part Numbers shown below double line) shall have a taper length "Z" of 3-1/2 to 4-1/2 times the pitch distance. (See General Specifications.) Screws 8 pitches or shorter in length (Part Numbers shown above double line) shall have a taper length "Z" of 2-1/2 to 3-1/2 times the pitch distance. (See General Specifications.)
M^1, T^1, and N^1 show recess dimensions for screws 1- inch in length and under except for sizes 1/4 x 10-20 and 1/4 x 10-28 which is 2- inch in length and under. (Part Numbers shown below solid line.)
M^2, T^2, and N^2 show recess dimensions for screws over 1- inch in length except for sizes 1/4 x 10-20 and 1/4 x 10-28 which is over 2- inch in length. (Part Numbers shown below solid line.) Recess penetration gaging values are shown above.
For method, gage tolerances, and gaging equipment see Section "Z" Addendum.

FORD MOTOR COMPANY
STANDARD PARTS

TAPPING SCREWS
OVAL TRIM HEAD

CROSS RECESSED
TYPES D, F, & G

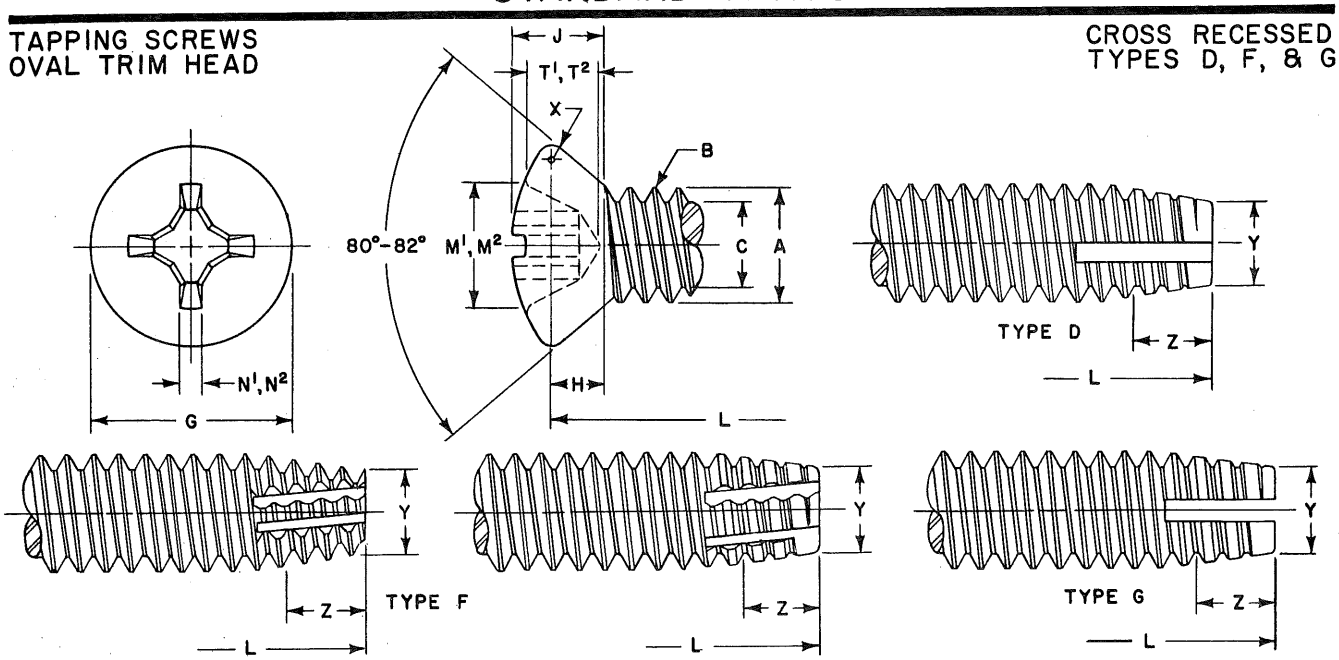

	Screw Size / Body / Head	1/4				5/16				3/8	
		10		12		12		1/4		5/16	
B	Threads Per Inch	20	28	20	28	18	24	18	24	16	24
A	Major Dia. of Thd.	.2500 .2428	.2500 .2438	.2500 .2428	.2500 .2438	.3125 .3043	.3125 .3059	.3125 .3043	.3125 .3059	.3750 .3660	.3750 .3684
C	Minor Dia. of Thd. (Max.)	.1887	.2062	.1887	.2062	.2443	.2614	.2443	.2614	.2983	.3239
G	Head Diameter	.385 .359	.385 .359	.438 .410	.438 .410	.438 .410	.438 .410	.507 .477	.507 .477	.635 .600	.635 .600
X	Radius (Ref.)	.029	.029	.033	.033	.033	.033	.038	.038	.048	.048
H	Side Height (Ref.)	.091	.091	.124	.124	.187	.087	.130	.130	.173	.173
J	Total Head Height	.146 .129	.146 .129	.187 .167	.187 .167	.150 .131	.150 .131	.202 .181	.202 .181	.265 .240	.265 .240
M^1	Recess Diameter	.209 .196	.209 .196	.270 .257	.270 .257	.270 .257	.270 .257	.290 .277	.290 .277	.390 .377	.390 .377
M^2	Recess Diameter	.220 .207	.220 .207	.270 .257	.270 .257	.270 .257	.270 .257	.290 .277	.290 .277	.390 .377	.390 .377
T^1	Recess Depth	.137 .113	.137 .113	.152 .128	.152 .128	.152 .128	.152 .128	.173 .148	.173 .148	.238 .214	.238 .214
T^2	Recess Depth	.148 .123	.148 .123	.152 .128	.152 .128	.152 .128	.152 .128	.173 .148	.173 .148	.238 .214	.238 .214
N^1	Recess Width (Min.)	.033	.033	.038	.038	.038	.038	.040	.040	.065	.065
N^2	Recess Width (Min.)	.033	.033	.038	.038	.038	.038	.040	.040	.065	.065
	Driver Size	2	2	3	3	3	3	3	3	4	4
	Penetration Gaging Depth	.126 .102	.126 .102	.135 .111	.135 .111	.135 .111	.135 .111	.156 .131	.156 .131	.218 .194	.218 .194
	Penetration Gaging Depth	.137 .112	.137 .112	.135 .111	.135 .111	.135 .111	.135 .111	.156 .131	.156 .131	.218 .194	.218 .194
Y	Point Diameter	.198 .181	.213 .201	.198 .181	.213 .201	.255 .236	.269 .255	.255 .236	.269 .255	.310 .289	.332 .318
L	LENGTH	FORD PART NUMBERS									
	1/4										
	3/8	53321-S	53322-S	53323-S	53324-S	53325-S	53326-S	53327-S	53328-S		
	1/2	53329-S	53330-S	53331-S	53332-S	53333-S	53334-S	53335-S	53336-S	53337-S	53338-S
	5/8	53339-S	53340-S	53341-S	53342-S	53343-S	53344-S	53345-S	53346-S	53347-S	53348-S
	3/4	53349-S	53350-S	53351-S	53352-S	53353-S	53354-S	53355-S	53356-S	53357-S	53358-S
	7/8	53359-S	53360-S	53361-S	53362-S	53363-S	53364-S	53365-S	53366-S	53367-S	53368-S
	1	53369-S	53370-S	53371-S	53372-S	53373-S	53374-S	53375-S	53376-S	53377-S	53378-S
	1 1/4	53379-S	53380-S	53381-S	53382-S	53383-S	53384-S	53385-S	53386-S	53387-S	53388-S
	1 1/2	53389-S	53390-S	53391-S	53392-S	53393-S	53394-S	53395-S	53396-S	53397-S	53398-S
	1 3/4	53399-S	53400-S	53401-S	53402-S	53403-S	53404-S	53405-S	53406-S	53407-S	53408-S

NOTES: For General Specifications see Page D-950.01. For Finishes see Section "Z" Addendum.
MATERIAL: Steel, case hardened.
Screws longer than 8 pitches in length (Part Numbers shown below double line) shall have a taper length "Z" of 3-1/2 to 4-1/2 times the pitch distance. (See General Specifications.) Screws 8 pitches or shorter in length (Part Numbers shown above double line) shall have a taper length "Z" of 2-1/2 to 3-1/2 times the pitch distance. (See General Specifications.)
M^1, T^1, and N^1 show recess dimensions for screws 1- inch in length and under except for sizes 1/4 x 10-20 and 1/4 x 10-28 which is 2- inch in length and under. (Part Numbers shown below solid line.)
M^2, T^2, and N^2 show recess dimensions for screws over 1- inch in length except for sizes 1/4 x 10-20 and 1/4 x 10-28 which is over 2- inch in length. (Part Numbers shown below solid line.) Recess penetration gaging values are shown above.
For method, gage tolerances, and gaging equipment see Section "Z" Addendum.

FORD MOTOR COMPANY
STANDARD PARTS

TAPPING SCREWS
PAN HEAD

SLOTTED
TYPE A

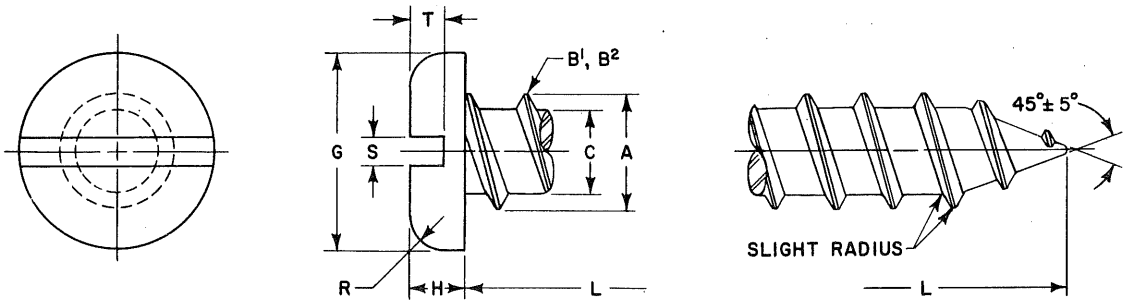

	Screw Size	4	5	6	7	8	10	12	14
B¹	Threads Per Inch	24	20	18	16	15	12	11	10
B²	Threads Per Inch	24	20	20	19	18	16	14	14
A	Major Dia. of Thread	.114 .110	.130 .126	.141 .136	.158 .152	.168 .162	.194 .188	.221 .215	.254 .248
C	Minor Dia. of Thread	.083 .078	.095 .090	.102 .096	.114 .108	.123 .116	.133 .126	.162 .155	.185 .178
G	Head Diameter	.219 .205	.245 .231	.270 .256	.296 .281	.322 .306	.373 .357	.425 .407	.476 .457
H	Head Height	.068 .058	.075 .065	.082 .072	.089 .079	.096 .085	.110 .099	.125 .112	.139 .126
R	Radius	.042	.044	.046	.049	.052	.061	.078	.087
S	Slot Width	.039 .031	.043 .035	.048 .039	.048 .039	.054 .045	.060 .050	.067 .056	.075 .064
T	Slot Depth	.040 .030	.045 .034	.050 .037	.054 .041	.058 .045	.068 .053	.077 .061	.085 .068
L	LENGTH	FORD PART NUMBERS							
1/4		32905-S	32906-S	32907-S	32908-S	32909-S			
3/8		32912-S	32913-S	32914-S	32915-S	32916-S	32917-S	32918-S	31476-S
1/2		32919-S	32920-S	32921-S	32922-S	32923-S	32924-S	32925-S	31477-S
5/8		32926-S	32927-S	32928-S	32929-S	32930-S	32931-S	32932-S	31478-S
3/4		32933-S	32934-S	32935-S	32936-S	32937-S	32938-S	32939-S	32940-S
7/8				32941-S	32942-S	32943-S	32944-S	32945-S	32946-S
1					32947-S	32948-S	32949-S	32950-S	32951-S
1 1/4					32952-S	32953-S	32954-S	32955-S	32956-S
1 1/2						32957-S	32958-S	32959-S	32960-S
1 3/4						32961-S	32962-S	32963-S	32964-S

NOTES: For General Specifications see Page D-950.01. For Finishes see Section "Z" Addendum.
MATERIAL: Steel, case hardened.
B^1 shows number of threads for standard length screws only. (Part Numbers shown below double lines.)
B^2 shows number of threads for short length screws only. (Part Numbers shown above double lines.)

FORD MOTOR COMPANY
STANDARD PARTS

TAPPING SCREWS PAN HEAD

SLOTTED TYPES B & BP

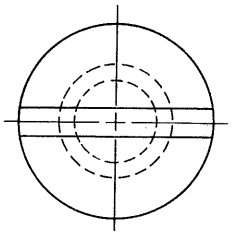

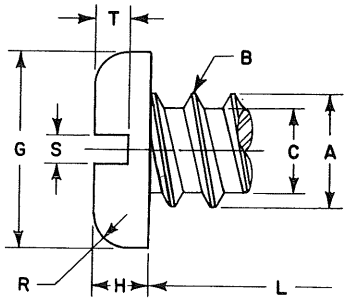

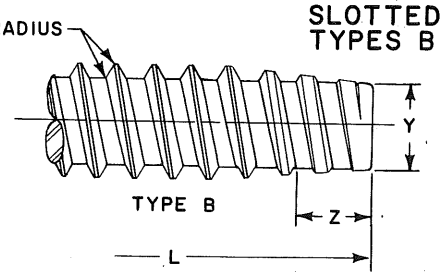

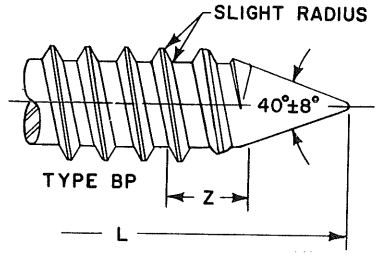

	Screw Size	4	5	6	7	8	10	12	1/4
B	Threads Per Inch	24	20	20	19	18	16	14	14
A	Major Dia. of Thread	.114 .110	.130 .126	.139 .135	.154 .149	.166 .161	.189 .183	.215 .209	.246 .240
C	Minor Dia. of Thread	.086 .082	.094 .090	.104 .099	.115 .109	.122 .116	.141 .135	.164 .157	.192 .185
G	Head Diameter	.219 .205	.245 .231	.270 .256	.296 .281	.322 .306	.373 .357	.425 .407	.492 .473
H	Head Height	.068 .058	.075 .065	.082 .072	.089 .079	.096 .085	.110 .099	.125 .112	.144 .130
R	Radius	.042	.044	.046	.049	.052	.061	.078	.087
S	Slot Width	.039 .031	.043 .035	.048 .039	.048 .039	.054 .045	.060 .050	.067 .056	.075 .064
T	Slot Depth	.040 .030	.045 .034	.050 .037	.054 .041	.058 .045	.068 .053	.077 .061	.087 .070
Y	Point Diameter	.079 .074	.087 .082	.095 .089	.105 .099	.112 .106	.130 .123	.152 .145	.179 .171
L	LENGTH	FORD PART NUMBERS					TYPE B		
1/4		33165-S	33166-S	33167-S	33168-S	33169-S	33170-S	33171-S	
3/8		33172-S	33173-S	33174-S	33175-S	33176-S	33177-S	33178-S	31506-S
1/2		33179-S	33180-S	33181-S	33182-S	33183-S	33184-S	33185-S	31507-S
5/8		33186-S	33187-S	33188-S	33189-S	33190-S	33191-S	33192-S	31508-S
3/4		33193-S	33194-S	33195-S	33196-S	33197-S	33198-S	33199-S	33200-S
7/8				33201-S	33202-S	33203-S	33204-S	33205-S	33206-S
1					33207-S	33208-S	33209-S	33210-S	33211-S
1 1/4					33212-S	33213-S	33214-S	33215-S	33216-S
1 1/2						33217-S	33218-S	33219-S	33220-S
1 3/4						33221-S	33222-S	33223-S	33224-S
L	LENGTH	FORD PART NUMBERS					TYPE BP		
1/4		33425-S	33426-S	33427-S	33428-S	33429-S			
3/8		33432-S	33433-S	33434-S	33435-S	33436-S	33437-S	33438-S	31538-S
1/2		33439-S	33440-S	33441-S	33442-S	33443-S	33444-S	33445-S	31539-S
5/8		33446-S	33447-S	33448-S	33449-S	33450-S	33451-S	33452-S	31540-S
3/4		33453-S	33454-S	33455-S	33456-S	33457-S	33458-S	33459-S	33460-S
7/8				33461-S	33462-S	33463-S	33464-S	33465-S	33466-S
1					33467-S	33468-S	33469-S	33470-S	33471-S
1 1/4					33472-S	33473-S	33474-S	33475-S	33476-S
1 1/2						33477-S	33478-S	33479-S	33480-S
1 3/4						33481-S	33482-S	33483-S	33484-S

NOTES: For General Specifications see Page D-950.01. For Finishes see Section "Z" Addendum.
MATERIAL: Steel, case hardened.
Screw lengths greater than "short length" series, (Part Numbers shown below double line) shall have a taper length "Z" of 2- to 2-1/2 times the pitch distance. (See General Specifications.)
Short length screws (Part Numbers shown above double lines) shall have a taper length "Z" of 1-1/2 to 2- times the pitch distance. (See General Specifications.)
Type BP short length screws (Part Numbers shown above double line) are impractical to manufacture.

FORD MOTOR COMPANY
STANDARD PARTS

TAPPING SCREWS
PAN HEAD

SLOTTED
TYPE C

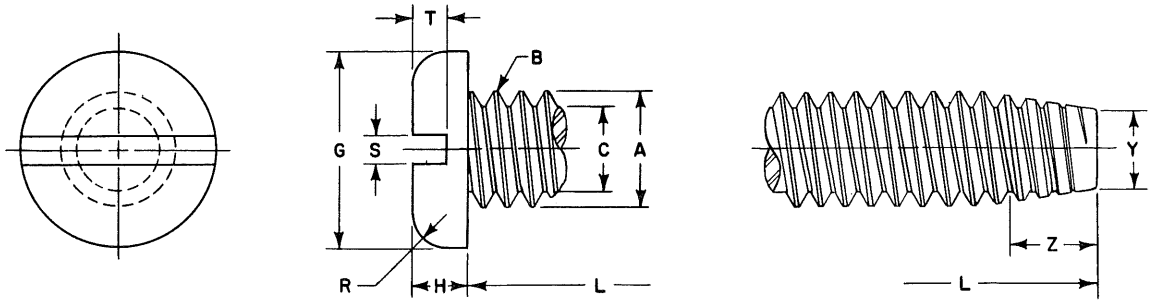

	Screw Size	6	8	10		12	1/4		5/16		3/8	
B	Threads Per Inch	32	32	24	32	24	20	28	18	24	16	24
A	Major Dia. of Thread	.1380 .1326	.1640 .1586	.1900 .1834	.1900 .1846	.2160 .2094	.2500 .2428	.2500 .2438	.3125 .3043	.3125 .3059	.3750 .3660	.3750 .3684
C	Minor Dia. of Thread (Max.)	.0997	.1257	.1389	.1517	.1649	.1887	.2062	.2443	.2614	.2983	.3239
G	Head Diameter	.270 .256	.322 .306	.373 .357	.373 .357	.425 .407	.492 .473	.492 .473	.615 .594	.615 .594	.740 .716	.740 .716
H	Head Height	.082 .072	.096 .085	.110 .099	.110 .099	.125 .112	.144 .130	.144 .130	.178 .162	.178 .162	.212 .195	.212 .195
R	Radius	.046	.052	.061	.061	.078	.087	.087	.099	.099	.143	.143
S	Slot Width	.048 .039	.054 .045	.060 .050	.060 .050	.067 .056	.075 .064	.075 .064	.084 .072	.084 .072	.094 .081	.094 .081
T	Slot Depth	.050 .037	.058 .045	.068 .053	.068 .053	.077 .061	.087 .070	.087 .070	.106 .085	.106 .085	.124 .100	.124 .100
Y	Point Diameter	.106 .095	.132 .121	.147 .133	.158 .147	.173 .159	.198 .181	.213 .201	.255 .236	.269 .255	.310 .289	.332 .318
L	LENGTH	FORD PART NUMBERS										
1/4		40500-S	40501-S	40502-S	40503-S							
3/8		40513-S	40514-S	40515-S	40516-S	40517-S	40518-S	40519-S	40520-S	40521-S		
1/2		40526-S	40527-S	40528-S	40529-S	40530-S	40531-S	40532-S	40533-S	40534-S	40535-S	40536-S
5/8		40539-S	40540-S	40541-S	40542-S	40543-S	40544-S	40545-S	40546-S	40547-S	40548-S	40549-S
3/4		40552-S	40553-S	40554-S	40555-S	40556-S	40557-S	40558-S	40559-S	40560-S	40561-S	40562-S
7/8		40565-S	40566-S	40567-S	40568-S	40569-S	40570-S	40571-S	40572-S	40573-S	40574-S	40575-S
1		40578-S	40579-S	40580-S	40581-S	40582-S	40583-S	40584-S	40585-S	40586-S	40587-S	40588-S
1 1/4		40591-S	40592-S	40593-S	40594-S	40595-S	40596-S	40597-S	40598-S	40599-S	40600-S	40601-S
1 1/2		40604-S	40605-S	40606-S	40607-S	40608-S	40609-S	40610-S	40611-S	40612-S	40613-S	40614-S
1 3/4		40617-S	40618-S	40619-S	40620-S	40621-S	40622-S	40623-S	40624-S	40625-S	40626-S	40627-S

NOTES: For General Specifications see Page D-950.01. For Finishes see Section "Z" Addendum.
MATERIAL: Steel, case hardened.
Screws longer than 8 pitches in length (Part Numbers shown below double line) shall have a taper length "Z" of 3-1/2 to 4-1/2 times the pitch distance. (See General Specifications.)
Screws 8 pitches or shorter in length (Part Numbers shown above double line) shall have a taper length "Z" of 2-1/2 to 3-1/2 times the pitch distance. (See General Specifications.)

FORD MOTOR COMPANY
STANDARD PARTS

TAPPING SCREWS
PAN HEAD

SLOTTED
TYPES D, F, & G

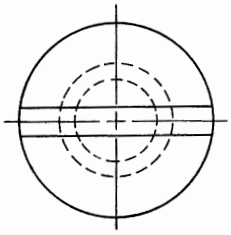

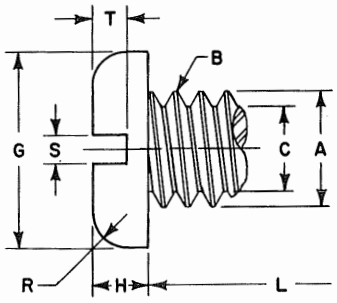

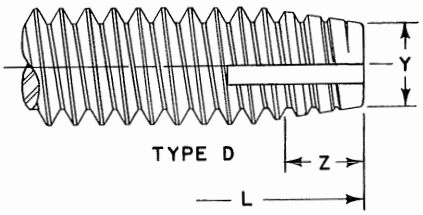

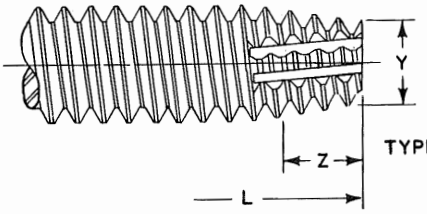

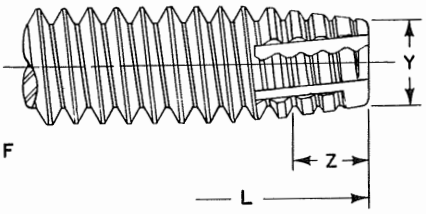

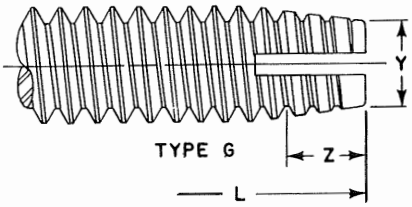

	Screw Size	6	8	10		12	1/4		5/16		3/8	
B	Threads Per Inch	32	32	24	32	24	20	28	18	24	16	24
A	Major Dia. of Thread	.1380 .1326	.1640 .1586	.1900 .1834	.1900 .1846	.2160 .2094	.2500 .2428	.2500 .2438	.3125 .3043	.3125 .3059	.3750 .3660	.3750 .3684
C	Minor Dia. of Thread (Max.)	.0997	.1257	.1389	.1517	.1649	.1887	.2062	.2443	.2614	.2983	.3239
G	Head Diameter	.270 .256	.322 .306	.373 .357	.373 .357	.425 .407	.492 .473	.492 .473	.615 .594	.615 .594	.740 .716	.740 .716
H	Head Height	.082 .072	.096 .085	.110 .099	.110 .099	.125 .112	.144 .130	.144 .130	.178 .162	.178 .162	.212 .195	.212 .195
R	Radius	.046	.052	.061	.061	.078	.087	.087	.099	.099	.143	.143
S	Slot Width	.048 .039	.054 .045	.060 .050	.060 .050	.067 .056	.075 .064	.075 .064	.084 .072	.084 .072	.094 .081	.094 .081
T	Slot Depth	.050 .037	.058 .045	.068 .053	.068 .053	.077 .061	.087 .070	.087 .070	.106 .085	.106 .085	.124 .100	.124 .100
Y	Point Diameter	.106 .095	.132 .121	.147 .133	.158 .147	.173 .159	.198 .181	.213 .201	.255 .236	.269 .255	.310 .289	.332 .318
L	LENGTH	FORD PART NUMBERS										
1/4		41540-S	41541-S	41542-S	41543-S							
3/8		41553-S	41554-S	41555-S	41556-S	41557-S	41558-S	41559-S	41560-S	41561-S		
1/2		41566-S	41567-S	41568-S	41569-S	41570-S	41571-S	41572-S	41573-S	41574-S	41575-S	41576-S
5/8		41579-S	41580-S	41581-S	41582-S	41583-S	41584-S	41585-S	41586-S	41587-S	41588-S	41589-S
3/4		41592-S	41593-S	41594-S	41595-S	41596-S	41597-S	41598-S	41599-S	41600-S	41601-S	41602-S
7/8		41605-S	41606-S	41607-S	41608-S	41609-S	41610-S	41611-S	41612-S	41613-S	41614-S	41615-S
1		41618-S	41619-S	41620-S	41621-S	41622-S	41623-S	41624-S	41625-S	41626-S	41627-S	41628-S
1 1/4		41631-S	41632-S	41633-S	41634-S	41635-S	41636-S	41637-S	41638-S	41639-S	41640-S	41641-S
1 1/2		41644-S	41645-S	41646-S	41647-S	41648-S	41649-S	41650-S	41651-S	41652-S	41653-S	41654-S
1 3/4		41657-S	41658-S	41659-S	41660-S	41661-S	41662-S	41663-S	41664-S	41665-S	41666-S	41667-S

NOTES: For General Specifications see Page D-950.01. For Finishes see Section "Z" Addendum.
MATERIAL: Steel, case hardened.
Screws longer than 8 pitches in length (Part Numbers shown below double line) shall have a taper length "Z" of 3-1/2 to 4-1/2 times the pitch distance. (See General Specifications.)
Screws 8 pitches or shorter in length (Part Numbers shown above double line) shall have a taper length "Z" of 2-1/2 to 3-1/2 times the pitch distance. (See General Specifications.)

FORD MOTOR COMPANY
STANDARD PARTS

TAPPING SCREWS
PAN HEAD

CROSS RECESSED
TYPE A

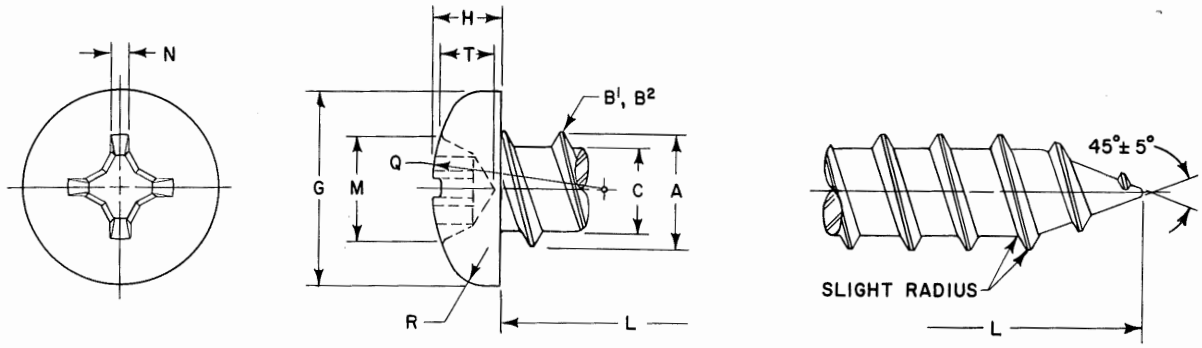

	Screw Size	4	5	6	7	8	10	12	14
B¹	Threads Per Inch	24	20	18	16	15	12	11	10
B²	Threads Per Inch	24	20	20	19	18	16	14	14
A	Major Dia. of Thread	.114 .110	.130 .126	.141 .136	.158 .152	.168 .162	.194 .188	.221 .215	.254 .248
C	Minor Dia. of Thread	.083 .078	.095 .090	.102 .096	.114 .108	.123 .116	.133 .126	.162 .155	.185 .178
G	Head Diameter	.219 .205	.245 .231	.270 .256	.296 .281	.322 .306	.373 .357	.425 .407	.476 .457
H	Head Height	.080 .070	.089 .079	.097 .087	.106 .096	.115 .105	.133 .122	.151 .139	.169 .156
Q	Radius (Ref.)	.173	.191	.207	.228	.244	.284	.323	.373
R	Radius	.042	.044	.046	.049	.052	.061	.078	.087
M	Recess Diameter	.122 .109	.158 .145	.166 .153	.176 .163	.182 .169	.199 .186	.259 .246	.281 .268
T	Recess Depth	.078 .060	.083 .057	.091 .066	.100 .075	.108 .082	.124 .100	.141 .115	.161 .135
N	Recess Width	.019	.028	.028	.029	.030	.031	.034	.036
	Driver Size	1	2	2	2	2	2	3	3
	Penetration Gaging Depth	.071 .053	.072 .046	.080 .055	.089 .064	.097 .071	.113 .089	.124 .098	.144 .118
L	LENGTH	FORD PART NUMBERS							
1/4		52711-S	52712-S	52713-S	52714-S	52715-S			
3/8		52716-S	52717-S	52718-S	52719-S	52720-S	52721-S	52768-S	
1/2		52722-S	52723-S	52724-S	52725-S	52726-S	52727-S	52728-S	52729-S
5/8		52730-S	52731-S	52732-S	52733-S	52734-S	52735-S	52736-S	52737-S
3/4		52738-S	52739-S	52740-S	52741-S	52742-S	52743-S	52744-S	52745-S
7/8				52746-S	52747-S	52748-S	52749-S	52750-S	52751-S
1				52752-S	52753-S	52754-S	52755-S	52756-S	52757-S
1 1/4						52758-S	52759-S	52760-S	52761-S
1 1/2							52762-S	52763-S	52764-S
1 3/4							52765-S	52766-S	52767-S

NOTES: For General Specifications see Page D-950.01. For Finishes see Section "Z" Addendum.
MATERIAL: Steel, case hardened.
B^1 shows number of threads for standard length screws only. (Part Numbers shown below double lines.)
B^2 shows number of threads for short length screws only. (Part Numbers shown above double lines.)
Recess penetration gaging values are shown above. For method and gaging equipment see Section "Z" Addendum.

FORD MOTOR COMPANY
STANDARD PARTS

TAPPING SCREWS
PAN HEAD

CROSS RECESSED
TYPES B & BP

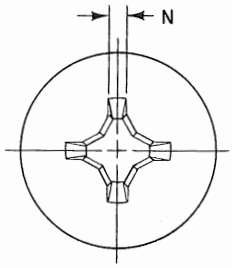

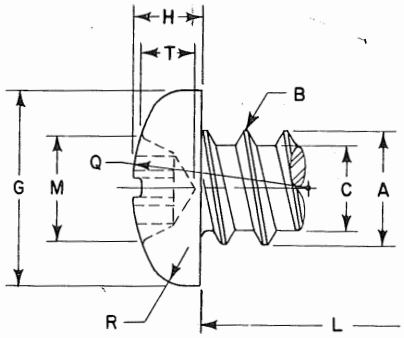

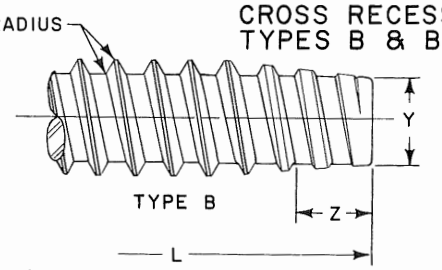

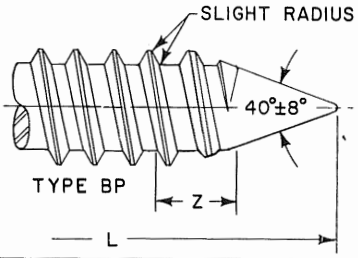

	Screw Size	4	5	6	7	8	10	12	1/4
B	Threads Per Inch	24	20	20	19	18	16	14	14
A	Major Dia. of Thread	.114 .110	.130 .126	.139 .135	.154 .149	.166 .161	.189 .183	.215 .209	.246 .240
C	Minor Dia. of Thread	.086 .082	.094 .090	.104 .099	.115 .109	.122 .116	.141 .135	.164 .157	.192 .185
G	Head Diameter	.219 .205	.245 .231	.270 .256	.296 .281	.322 .306	.373 .357	.425 .407	.492 .473
H	Head Height	.080 .070	.089 .079	.097 .087	.106 .096	.115 .105	.133 .122	.151 .139	.175 .162
Q	Radius (Ref.)	.173	.191	.207	.228	.244	.284	.323	.373
R	Radius	.042	.044	.046	.049	.052	.061	.078	.087
M	Recess Diameter	.122 .109	.158 .145	.166 .153	.176 .163	.182 .169	.199 .186	.259 .246	.281 .268
T	Recess Depth	.078 .060	.083 .057	.091 .066	.100 .075	.108 .082	.124 .100	.141 .115	.161 .135
N	Recess Width	.019	.028	.028	.029	.030	.031	.034	.036
	Driver Size	1	2	2	2	2	2	3	3
	Penetration Gaging Depth	.071 .053	.072 .046	.080 .055	.089 .064	.097 .071	.113 .089	.124 .098	.144 .118
Y	Point Diameter	.079 .074	.087 .082	.095 .089	.105 .099	.112 .106	.130 .123	.152 .145	.179 .171
L	LENGTH	FORD PART NUMBERS					TYPE B		
	1/4	52771-S	52772-S	52773-S	52774-S	52775-S	52828-S		
	3/8	52776-S	52777-S	52778-S	52779-S	52780-S	52781-S		
	1/2	52782-S	52783-S	52784-S	52785-S	52786-S	52787-S	52788-S	52789-S
	5/8	52790-S	52791-S	52792-S	52793-S	52794-S	52795-S	52796-S	52797-S
	3/4	52798-S	52799-S	52800-S	52801-S	52802-S	52803-S	52804-S	52805-S
	7/8			52806-S	52807-S	52808-S	52809-S	52810-S	52811-S
	1			52812-S	52813-S	52814-S	52815-S	52816-S	52817-S
	1 1/4					52818-S	52819-S	52820-S	52821-S
	1 1/2					52829-S	52822-S	52823-S	52824-S
	1 3/4						52825-S	52826-S	52827-S
L	LENGTH	FORD PART NUMBERS					TYPE BP		
	1/4	52831-S	52832-S	52833-S	52834-S	52835-S			
	3/8	52836-S	52837-S	52838-S	52839-S	52840-S	52841-S		
	1/2	52842-S	52843-S	52844-S	52845-S	52846-S	52847-S	52848-S	52849-S
	5/8	52850-S	52851-S	52852-S	52853-S	52854-S	52855-S	52856-S	52857-S
	3/4	52858-S	52859-S	52860-S	52861-S	52862-S	52863-S	52864-S	52865-S
	7/8			52866-S	52867-S	52868-S	52869-S	52870-S	52871-S
	1			52872-S	52873-S	52874-S	52875-S	52876-S	52877-S
	1 1/4					52878-S	52879-S	52880-S	52881-S
	1 1/2						52882-S	52883-S	52884-S
	1 3/4						52885-S	52886-S	52887-S

NOTES: For General Specifications see Page D-950.01. For Finishes see Section "Z" Addendum.
MATERIAL: Steel, case hardened.
Screw lengths greater than "short length" series (Part Numbers shown below double line) shall have a taper length "Z" of 2- to 2-1/2 times the pitch distance. (See General Specifications.)
Short length screws (Part Numbers shown above double lines) shall have a taper length "Z" of 1-1/2 to 2- times the pitch distance. (See General Specifications.)
Type BP short length screws (Part Numbers shown above double line) are impractical to manufacture.
Recess penetration gaging values are shown above. For method and gaging equipment see Section "Z" Addendum.

FORD MOTOR COMPANY
STANDARD PARTS

TAPPING SCREWS
PAN HEAD

CROSS RECESSED
TYPE C

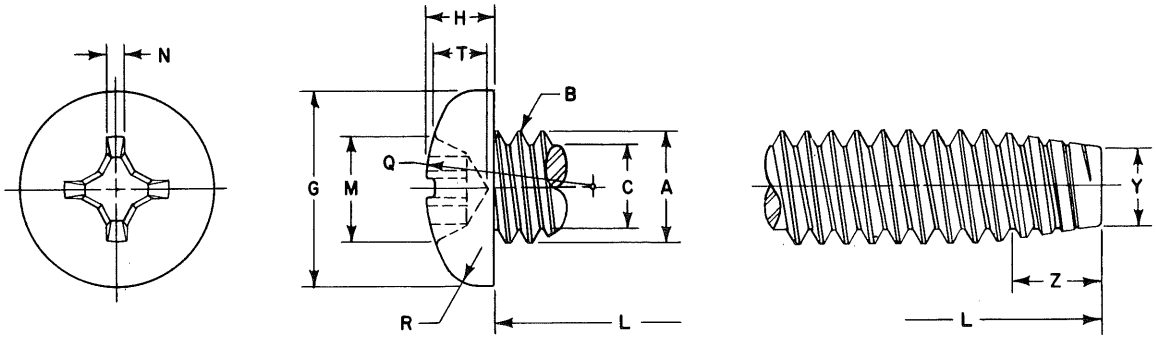

	Screw Size	6	8	10		12	1/4		5/16		3/8	
B	Threads Per Inch	32	32	24	32	24	20	28	18	24	16	24
A	Major Dia. of Thread	.1380 .1326	.1640 .1586	.1900 .1834	.1900 .1846	.2160 .2094	.2500 .2428	.2500 .2438	.3125 .3043	.3125 .3059	.3750 .3660	.3750 .3684
C	Minor Dia. of Thread (Max.)	.0997	.1257	.1389	.1517	.1649	.1887	.2062	.2443	.2614	.2983	.3239
G	Head Diameter	.270 .256	.322 .306	.373 .357	.373 .357	.425 .407	.492 .473	.492 .473	.615 .594	.615 .594	.740 .716	.740 .716
H	Head Height	.097 .087	.115 .105	.133 .122	.133 .122	.151 .139	.175 .162	.175 .162	.218 .203	.218 .203	.261 .244	.261 .244
Q	Radius (Ref.)	.207	.244	.284	.284	.323	.373	.373	.527	.527	.652	.652
R	Radius	.046	.052	.061	.061	.078	.087	.087	.099	.099	.143	.143
M	Recess Diameter	.166 .153	.182 .169	.199 .186	.199 .186	.259 .246	.281 .268	.281 .268	.350 .337	.350 .337	.393 .380	.393 .380
T	Recess Depth	.091 .066	.108 .082	.124 .100	.124 .100	.141 .115	.161 .135	.161 .135	.193 .169	.193 .169	.233 .210	.233 .210
N	Recess Width	.028	.030	.031	.031	.034	.036	.036	.059	.059	.065	.065
	Driver Size	2	2	2	2	3	3	3	4	4	4	4
	Penetration Gaging Depth	.080 .055	.097 .071	.113 .089	.113 .089	.124 .098	.144 .118	.144 .118	.173 .149	.173 .149	.213 .190	.213 .190
Y	Point Diameter	.106 .095	.132 .121	.147 .133	.158 .147	.173 .159	.198 .181	.213 .201	.255 .236	.269 .255	.310 .289	.332 .318
L	LENGTH	FORD PART NUMBERS										
1/4		51850-S	51851-S	51852-S	51853-S							
3/8		51854-S	51855-S	51856-S	51857-S	51858-S	51859-S	51860-S	51861-S	51862-S		
1/2		51863-S	51864-S	51865-S	51866-S	51867-S	51868-S	51869-S	51870-S	51871-S	51872-S	51873-S
5/8		51874-S	51875-S	51876-S	51877-S	51878-S	51879-S	51880-S	51881-S	51882-S	51883-S	51884-S
3/4		51885-S	51886-S	51887-S	51888-S	51889-S	51890-S	51891-S	51892-S	51893-S	51894-S	51895-S
7/8		51896-S	51897-S	51898-S	51899-S	51900-S	51901-S	51902-S	51903-S	51904-S	51905-S	51906-S
1		51907-S	51908-S	51909-S	51910-S	51911-S	51912-S	51913-S	51914-S	51915-S	51916-S	51917-S
1 1/4		51918-S	51919-S	51920-S	51921-S	51922-S	51923-S	51924-S	51925-S	51926-S	51927-S	51928-S
1 1/2		51929-S	51930-S	51931-S	51932-S	51933-S	51934-S	51935-S	51936-S	51937-S	51938-S	51939-S
1 3/4			51940-S	51941-S	51942-S	51943-S	51944-S	51945-S	51946-S	51947-S	51948-S	51949-S

NOTES: For General Specifications see Page D-950.01. For Finishes see Section "Z" Addendum.
MATERIAL: Steel, case hardened.
Screws longer than 8 pitches in length (Part Numbers shown below double line) shall have a taper length "Z" of 3-1/2 to 4-1/2 times the pitch distance. (See General Specifications.)
Screws 8 pitches or shorter in length (Part Numbers shown above double line) shall have a taper length "Z" of 2-1/2 to 3-1/2 times the pitch distance. (See General Specifications.)
Recess penetration gaging values are shown above. For method and gaging equipment see Section "Z" Addendum.

FORD MOTOR COMPANY
STANDARD PARTS

TAPPING SCREWS
PAN HEAD

CROSS RECESSED
TYPES D, F, & G

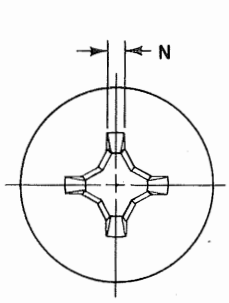

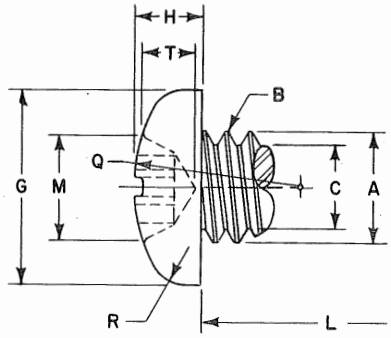

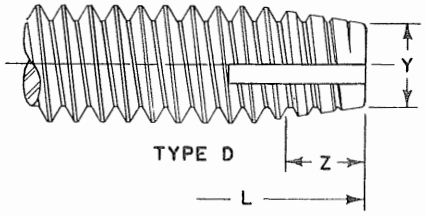

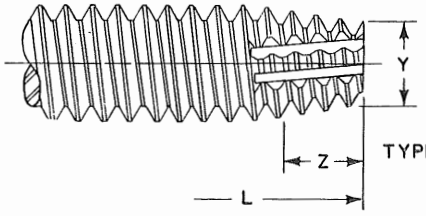

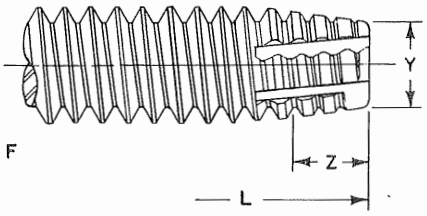

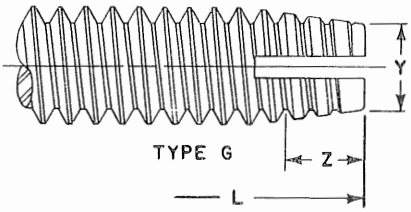

	Screw Size	6	8	10		12	1/4		5/16		3/8	
B	Threads Per Inch	32	32	24	32	24	20	28	18	24	16	24
A	Major Dia. of Thread	.1380 .1326	.1640 .1586	.1900 .1834	.1900 .1846	.2160 .2094	.2500 .2428	.2500 .2438	.3125 .3043	.3125 .3059	.3750 .3660	.3750 .3684
C	Minor Dia. of Thread (Max.)	.0997	.1257	.1389	.1517	.1649	.1887	.2062	.2443	.2614	.2983	.3239
G	Head Diameter	.270 .256	.322 .306	.373 .357	.373 .357	.425 .407	.492 .473	.492 .473	.615 .594	.615 .594	.740 .716	.740 .716
H	Head Height	.097 .087	.115 .105	.133 .122	.133 .122	.151 .139	.175 .162	.175 .162	.218 .203	.218 .203	.261 .244	.261 .244
Q	Radius (Ref.)	.207	.244	.284	.284	.323	.373	.373	.527	.527	.652	.652
R	Radius	.046	.052	.061	.061	.078	.087	.087	.099	.099	.143	.143
M	Recess Diameter	.166 .153	.182 .169	.199 .186	.199 .186	.259 .246	.281 .268	.281 .268	.350 .337	.350 .337	.393 .380	.393 .380
T	Recess Depth	.091 .066	.108 .082	.124 .100	.124 .100	.141 .115	.161 .135	.161 .135	.193 .169	.193 .169	.233 .210	.233 .210
N	Recess Width	.028	.030	.031	.031	.034	.036	.036	.059	.059	.065	.065
	Driver Size	2	2	2	2	3	3	3	4	4	4	4
	Penetration Gaging Depth	.080 .055	.097 .071	.113 .089	.113 .089	.124 .098	.144 .118	.144 .118	.173 .149	.173 .149	.213 .190	.213 .190
Y	Point Diameter	.106 .095	.132 .121	.147 .133	.158 .147	.173 .159	.198 .181	.213 .201	.255 .236	.269 .255	.310 .289	.332 .318
L	LENGTH	FORD PART NUMBERS										
1/4		51750-S	51751-S	51752-S	51753-S							
3/8		51754-S	51755-S	51756-S	51757-S	51758-S	51759-S	51760-S	51761-S	51762-S		
1/2		51763-S	51764-S	51765-S	51766-S	51767-S	51768-S	51769-S	51770-S	51771-S	51772-S	51773-S
5/8		51774-S	51775-S	51776-S	51777-S	51778-S	51779-S	51780-S	51781-S	51782-S	51783-S	51784-S
3/4		51785-S	51786-S	51787-S	51788-S	51789-S	51790-S	51791-S	51792-S	51793-S	51794-S	51795-S
7/8		51796-S	51797-S	51798-S	51799-S	51800-S	51801-S	51802-S	51803-S	51804-S	51805-S	51806-S
1		51807-S	51808-S	51809-S	51810-S	51811-S	51812-S	51813-S	51814-S	51815-S	51816-S	51817-S
1 1/4		51818-S	51819-S	51820-S	51821-S	51822-S	51823-S	51824-S	51825-S	51826-S	51827-S	51828-S
1 1/2		51829-S	51830-S	51831-S	51832-S	51833-S	51834-S	51835-S	51836-S	51837-S	51838-S	51839-S
1 3/4			51840-S	51841-S	51842-S	51843-S	51844-S	51845-S	51846-S	51847-S	51848-S	51849-S

NOTES: For General Specifications see Page D-950.01. For Finishes see Section "Z" Addendum.
MATERIAL: Steel, case hardened.
Screws longer than 8 pitches in length (Part Numbers shown below double line) shall have a taper length "Z" of 3-1/2 to 4-1/2 times the pitch distance. (See General Specifications.)
Screws 8 pitches or shorter in length (Part Numbers shown above double line) shall have a taper length "Z" of 2-1/2 to 3-1/2 times the pitch distance. (See General Specifications.)
Recess penetration gaging values are shown above. For method and gaging equipment see Section "Z" Addendum.

FORD MOTOR COMPANY
STANDARD PARTS

TAPPING SCREWS
ROUND HEAD

SLOTTED
TYPE A

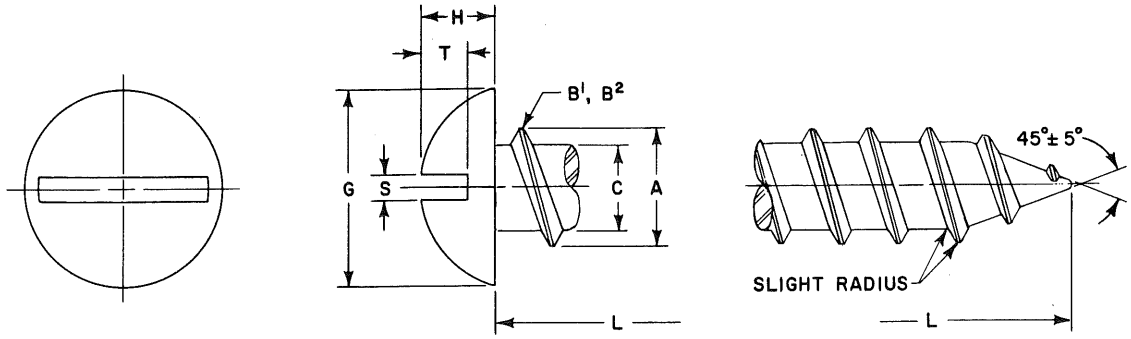

	Screw Size	4	5	6	7	8	10	12	14
B^1	Threads Per Inch	24	20	18	16	15	12	11	10
B^2	Threads Per Inch	24	20	20	19	18	16	14	14
A	Major Dia. of Thread	.114 .110	.130 .126	.141 .136	.158 .152	.168 .162	.194 .188	.221 .215	.254 .248
C	Minor Dia. of Thread	.083 .078	.095 .090	.102 .096	.114 .108	.123 .116	.133 .126	.162 .155	.185 .178
G	Head Diameter	.211 .193	.236 .217	.260 .240	.285 .264	.309 .287	.359 .334	.408 .382	.457 .429
H	Head Height	.086 .075	.095 .083	.103 .091	.111 .099	.120 .107	.137 .123	.153 .139	.170 .155
S	Slot Width	.039 .031	.043 .035	.048 .039	.048 .039	.054 .045	.060 .050	.067 .056	.075 .064
T	Slot Depth	.058 .044	.063 .047	.068 .051	.072 .055	.077 .058	.087 .065	.096 .073	.106 .080
L	LENGTH	FORD PART NUMBERS							
1/4 3/8		32840-S 32847-S	32841-S 32848-S	32842-S 32849-S	32843-S 32850-S	32844-S 32851-S	32852-S	32853-S	31472-S
1/2 5/8 3/4 7/8		32854-S 32861-S 32868-S	32855-S 32862-S 32869-S	32856-S 32863-S 32870-S 32876-S	32857-S 32864-S 32871-S 32877-S	32858-S 32865-S 32872-S 32878-S	32859-S 32866-S 32873-S 32879-S	32860-S 32867-S 32874-S 32880-S	31473-S 31474-S 32875-S 32881-S
1 1 1/4 1 1/2 1 3/4					32882-S 32887-S	32883-S 32888-S 32892-S 32896-S	32884-S 32889-S 32893-S 32897-S	32885-S 32890-S 32894-S 32898-S	32886-S 32891-S 32895-S 32899-S

NOTES: For General Specifications see Page D-950.01. For Finishes see Section "Z" Addendum.
MATERIAL: Steel, case hardened.
B^1 shows number of threads for standard length screws only. (Part Numbers shown below double lines.)
B^2 shows number of threads for short length screws only. (Part Numbers shown above double lines.)

FORD MOTOR COMPANY
STANDARD PARTS

TAPPING SCREWS
ROUND HEAD

SLOTTED
TYPES B & BP

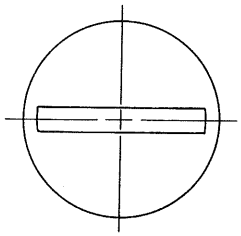

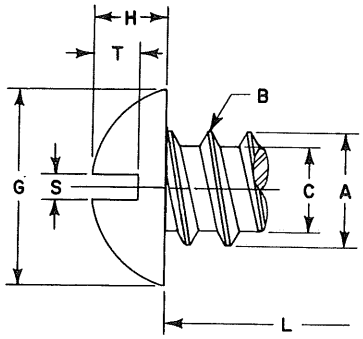

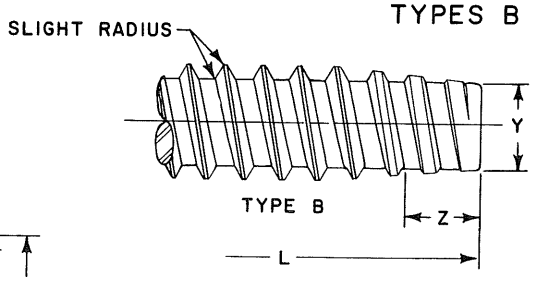

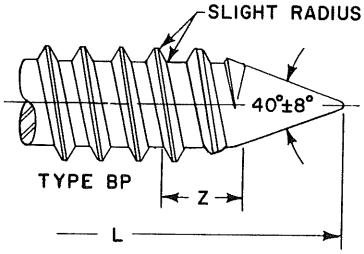

	Screw Size	4	5	6	7	8	10	12	1/4
B	Threads Per Inch	24	20	20	19	18	16	14	14
A	Major Dia. of Thread	.114 .110	.130 .126	.139 .135	.154 .149	.166 .161	.189 .183	.215 .209	.246 .240
C	Minor Dia. of Thread	.086 .082	.094 .090	.104 .099	.115 .109	.122 .116	.141 .135	.164 .157	.192 .185
G	Head Diameter	.211 .193	.236 .217	.260 .240	.285 .264	.309 .287	.359 .334	.408 .382	.472 .443
H	Head Height	.086 .075	.095 .083	.103 .091	.111 .099	.120 .107	.137 .123	.153 .139	.175 .160
S	Slot Width	.039 .031	.043 .035	.048 .039	.048 .039	.054 .045	.060 .050	.067 .056	.075 .064
T	Slot Depth	.058 .044	.063 .047	.068 .051	.072 .055	.077 .058	.087 .065	.096 .073	.109 .082
Y	Point Diameter	.079 .074	.087 .082	.095 .089	.105 .099	.112 .106	.130 .123	.152 .145	.179 .171
L	LENGTH	FORD PART NUMBERS					TYPE B		
1/4		33100-S	33101-S	33102-S	33103-S	33104-S	33105-S	33106-S	
3/8		33107-S	33108-S	33109-S	33110-S	33111-S	33112-S	33113-S	31504-S
1/2		33114-S	33115-S	33116-S	33117-S	33118-S	33119-S	33120-S	33121-S
5/8		33122-S	33123-S	33124-S	33125-S	33126-S	33127-S	33128-S	33129-S
3/4				33130-S	33131-S	33132-S	33133-S	33134-S	33135-S
7/8				33136-S	33137-S	33138-S	33139-S	33140-S	33141-S
1					33142-S	33143-S	33144-S	33145-S	33146-S
1 1/4					33147-S	33148-S	33149-S	33150-S	33151-S
1 1/2						33152-S	33153-S	33154-S	33155-S
1 3/4						33156-S	33157-S	33158-S	33159-S
L	LENGTH	FORD PART NUMBERS					TYPE BP		
1/4		33360-S	33361-S	33362-S	33363-S	33364-S			
3/8		33367-S	33368-S	33369-S	33370-S	33371-S	33372-S	33373-S	31534-S
1/2		33374-S	33375-S	33376-S	33377-S	33378-S	33379-S	33380-S	31535-S
5/8		33381-S	33382-S	33383-S	33384-S	33385-S	33386-S	33387-S	31536-S
3/4		33388-S	33389-S	33390-S	33391-S	33392-S	33393-S	33394-S	33395-S
7/8				33396-S	33397-S	33398-S	33399-S	33400-S	33401-S
1					33402-S	33403-S	33404-S	33405-S	33406-S
1 1/4					33407-S	33408-S	33409-S	33410-S	33411-S
1 1/2						33412-S	33413-S	33414-S	33415-S
1 3/4						33416-S	33417-S	33418-S	33419-S

NOTES: For General Specifications see Page D-950.01. For Finishes see Section "Z" Addendum.
MATERIAL: Steel, case hardened.
Short length screws (Part Numbers shown above double lines) shall have a taper length "Z" of 1-1/2 to 2- times the pitch distance. (See General Specifications.)
Screw lengths greater than "short length" series, (Part Numbers shown below double line) shall have a taper length "Z" of 2- to 2-1/2 times the pitch distance. (See General Specifications.)
Type BP short length screws (Part Numbers shown above double line) are impractical to manufacture.

FORD MOTOR COMPANY
STANDARD PARTS

TAPPING SCREWS
ROUND HEAD

SLOTTED
TYPE C

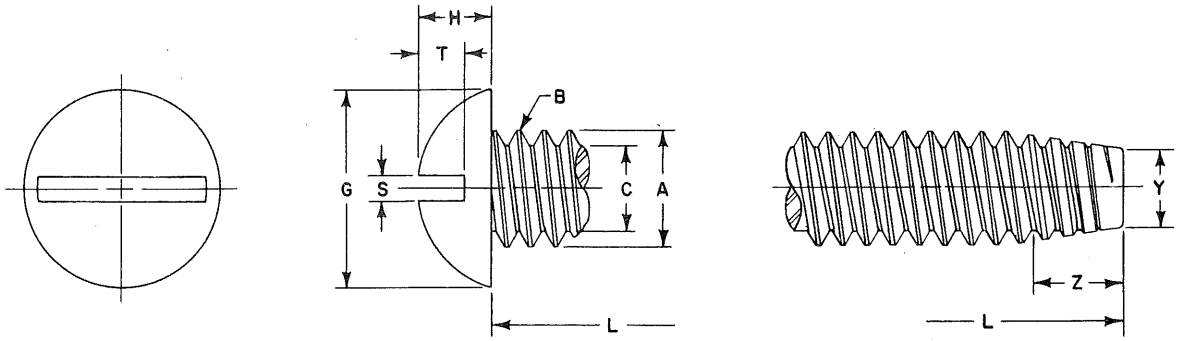

	Screw Size	6	8	10		12	1/4		5/16		3/8	
B	Threads Per Inch	32	32	24	32	24	20	28	18	24	16	24
A	Major Dia. of Thread	.1380 .1326	.1640 .1586	.1900 .1834	.1900 .1846	.2160 .2094	.2500 .2428	.2500 .2438	.3125 .3043	.3125 .3059	.3750 .3660	.3750 .3684
C	Minor Dia. of Thread (Max.)	.0997	.1257	.1389	.1517	.1649	.1887	.2062	.2443	.2614	.2983	.3239
G	Head Diameter	.260 .240	.309 .287	.359 .334	.359 .334	.408 .382	.472 .443	.472 .443	.590 .557	.590 .557	.708 .670	.708 .670
H	Head Height	.103 .091	.120 .107	.137 .123	.137 .123	.153 .139	.175 .160	.175 .160	.216 .198	.216 .198	.256 .237	.256 .237
S	Slot Width	.048 .039	.054 .045	.060 .050	.060 .050	.067 .056	.075 .064	.075 .064	.084 .072	.084 .072	.094 .081	.094 .081
T	Slot Depth	.068 .051	.077 .058	.087 .065	.087 .065	.096 .073	.109 .082	.109 .082	.132 .099	.132 .099	.155 .117	.155 .117
Y	Point Diameter	.106 .095	.132 .121	.147 .133	.158 .147	.173 .159	.198 .181	.213 .201	.255 .236	.269 .255	.310 .289	.332 .318
L	LENGTH	FORD PART NUMBERS										
1/4		40630-S	40631-S	40632-S	40633-S							
3/8		40643-S	40644-S	40645-S	40646-S	40647-S	40648-S	40649-S	40650-S	40651-S		
1/2		40656-S	40657-S	40658-S	40659-S	40660-S	40661-S	40662-S	40663-S	40664-S	40665-S	40666-S
5/8		40669-S	40670-S	40671-S	40672-S	40673-S	40674-S	40675-S	40676-S	40677-S	40678-S	40679-S
3/4		40682-S	40683-S	40684-S	40685-S	40686-S	40687-S	40688-S	40689-S	40690-S	40691-S	40692-S
7/8		40695-S	40696-S	40697-S	40698-S	40699-S	40700-S	40701-S	40702-S	40703-S	40704-S	40705-S
1		40708-S	40709-S	40710-S	40711-S	40712-S	40713-S	40714-S	40715-S	40716-S	40717-S	40718-S
1 1/4		40721-S	40722-S	40723-S	40724-S	40725-S	40726-S	40727-S	40728-S	40729-S	40730-S	40731-S
1 1/2		40734-S	40735-S	40736-S	40737-S	40738-S	40739-S	40740-S	40741-S	40742-S	40743-S	40744-S
1 3/4		40747-S	40748-S	40749-S	40750-S	40751-S	40752-S	40753-S	40754-S	40755-S	40756-S	40757-S

NOTES: For General Specifications see Page D-950.01. For Finishes see Section "Z" Addendum.
MATERIAL: Steel, case hardened.
Screws longer than 8 pitches in length (Part Numbers shown below double line) shall have a taper length "Z" of 3-1/2 to 4-1/2 times the pitch distance. (See General Specifications.)
Screws 8 pitches or shorter in length (Part Numbers shown above double line) shall have a taper length "Z" of 2-1/2 to 3-1/2 times the pitch distance. (See General Specifications)

FORD MOTOR COMPANY
STANDARD PARTS

TAPPING SCREWS
ROUND HEAD

SLOTTED
TYPES D, F, & G

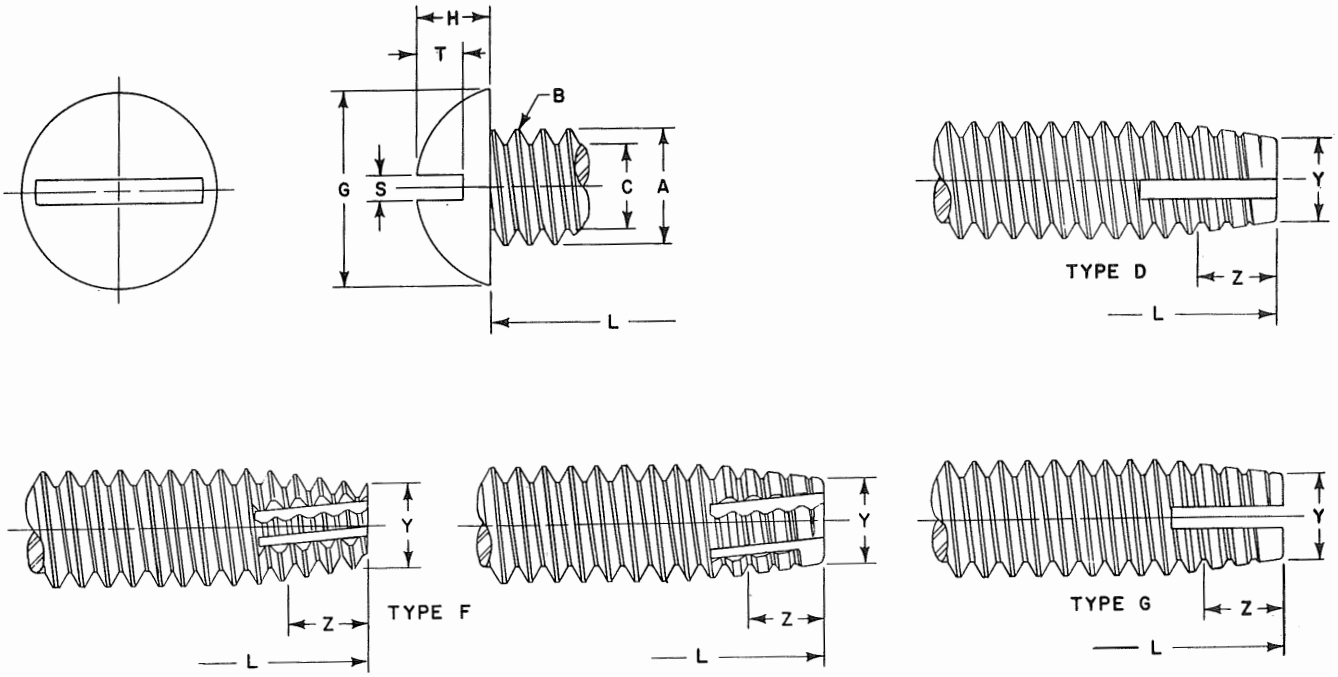

	Screw Size	6	8	10		12	1/4		5/16		3/8	
B	Threads Per Inch	32	32	24	32	24	20	28	18	24	16	24
A	Major Dia. of Thread	.1380 .1326	.1640 .1586	.1900 .1834	.1900 .1846	.2160 .2094	.2500 .2428	.2500 .2438	.3125 .3043	.3125 .3059	.3750 .3660	.3750 .3684
C	Minor Dia. of Thread (Max.)	.0997	.1257	.1389	.1517	.1649	.1887	.2062	.2443	.2614	.2983	.3239
G	Head Diameter	.260 .240	.309 .287	.359 .334	.359 .334	.408 .382	.472 .443	.472 .443	.590 .557	.590 .557	.708 .670	.708 .670
H	Head Height	.103 .091	.120 .107	.137 .123	.137 .123	.153 .139	.175 .160	.175 .160	.216 .198	.216 .198	.256 .237	.256 .237
S	Slot Width	.048 .039	.054 .045	.060 .050	.060 .050	.067 .056	.075 .064	.075 .064	.084 .072	.084 .072	.094 .081	.094 .081
T	Slot Depth	.068 .051	.077 .058	.087 .065	.087 .065	.096 .073	.109 .082	.109 .082	.132 .099	.132 .099	.155 .117	.155 .117
Y	Point Diameter	.106 .095	.132 .121	.147 .133	.158 .147	.173 .159	.198 .181	.213 .201	.255 .236	.269 .255	.310 .289	.332 .318
L	LENGTH	FORD PART NUMBERS										
1/4		41670-S	41671-S	41672-S	41673-S							
3/8		41683-S	41684-S	41685-S	41686-S	41687-S	41688-S	41689-S	41690-S	41691-S		
1/2		41696-S	41697-S	41698-S	41699-S	41700-S	41701-S	41702-S	41703-S	41704-S	41705-S	41706-S
5/8		41709-S	41710-S	41711-S	41712-S	41713-S	41714-S	41715-S	41716-S	41717-S	41718-S	41719-S
3/4		41722-S	41723-S	41724-S	41725-S	41726-S	41727-S	41728-S	41729-S	41730-S	41731-S	41732-S
7/8		41735-S	41736-S	41737-S	41738-S	41739-S	41740-S	41741-S	41742-S	41743-S	41744-S	41745-S
1		41748-S	41749-S	41750-S	41751-S	41752-S	41753-S	41754-S	41755-S	41756-S	41757-S	41758-S
1 1/4		41761-S	41762-S	41763-S	41764-S	41765-S	41766-S	41767-S	41768-S	41769-S	41770-S	41771-S
1 1/2		41774-S	41775-S	41776-S	41777-S	41778-S	41779-S	41780-S	41781-S	41782-S	41783-S	41784-S
1 3/4		41787-S	41788-S	41789-S	41790-S	41791-S	41792-S	41793-S	41794-S	41795-S	41796-S	41797-S

NOTES: For General Specifications see Page D-950.01. For Finishes see Section "Z" Addendum.
MATERIAL: Steel, case hardened.
Screws longer than 8 pitches in length (Part Numbers shown below double lines) shall have a taper length "Z" of 3-1/2 to 4-1/2 times the pitch distance. (See General Specifications).
Screws 8 pitches or shorter in length (Part Numbers shown above double lines) shall have a taper length "Z" of 2-1/2 to 3-1/2 times the pitch distance. (See General Specifications).

FORD MOTOR COMPANY
STANDARD PARTS

TAPPING SCREWS
ROUND HEAD

CROSS RECESSED
TYPE A

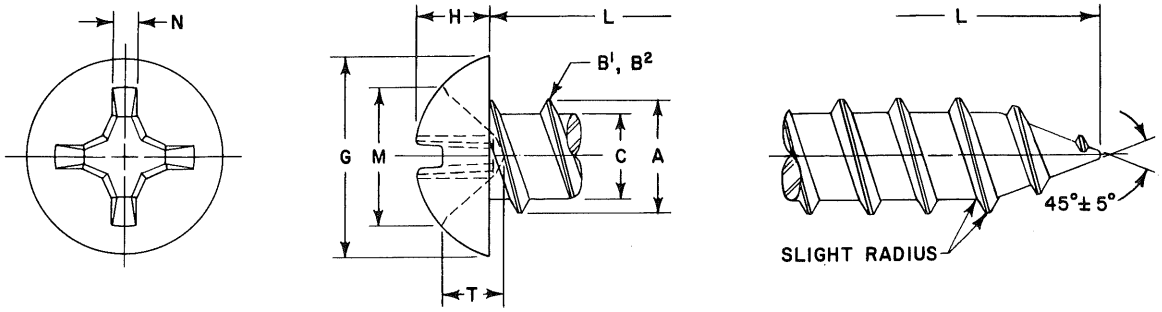

	Screw Size	4	5	6	7	8	10	12	14
B^1	Threads Per Inch	24	20	18	16	15	12	11	10
B^2	Threads Per Inch	24	20	20	19	18	16	14	14
A	Major Dia. of Thread	.114 .110	.130 .126	.141 .136	.158 .152	.168 .162	.194 .188	.221 .215	.254 .248
C	Minor Dia. of Thread	.083 .078	.095 .090	.102 .096	.114 .108	.123 .116	.133 .126	.162 .155	.185 .178
G	Head Diameter	.211 .193	.236 .217	.260 .240	.285 .264	.309 .287	.359 .334	.408 .382	.457 .429
H	Head Height	.086 .075	.095 .083	.103 .091	.111 .099	.120 .107	.137 .123	.153 .139	.170 .155
M	Recess Diameter	.118 .105	.154 .141	.162 .149	.170 .157	.178 .165	.195 .182	.249 .236	.265 .252
T	Recess Depth	.072 .053	.074 .046	.084 .056	.092 .066	.101 .075	.119 .093	.125 .099	.142 .116
N	Recess Width	.019	.027	.027	.028	.030	.031	.032	.034
	Driver Size	1	2	2	2	2	2	3	3
	Penetration Gaging Depth	.065 .046	.063 .035	.073 .045	.081 .055	.090 .064	.108 .082	.108 .082	.125 .099
L	LENGTH	FORD PART NUMBERS							
1/4		52161-S	52162-S	52163-S					
3/8		52164-S	52165-S	52166-S	52167-S	52168-S	52169-S		
1/2		52170-S	52171-S	52172-S	52173-S	52174-S	52175-S	52176-S	52177-S
5/8			52178-S	52179-S	52180-S	52181-S	52182-S	52183-S	52184-S
3/4				52185-S	52186-S	52187-S	52188-S	52189-S	52190-S
7/8				52191-S	52192-S	52193-S	52194-S	52195-S	52196-S
1				52197-S	52198-S	52199-S 52203-S	52200-S 52204-S	52201-S 52205-S	52202-S 52206-S
1 1/4							52207-S	52208-S	52209-S
1 1/2							52210-S	52211-S	52212-S
1 3/4									

NOTES: For General Specifications see Page D-950.01. For Finishes see Section "Z" Addendum.
MATERIAL: Steel, case hardened.
B^1 shows number of threads for standard length screws only. (Part Numbers shown below double lines.)
B^2 shows number of threads for short length screws only. (Part Numbers shown above double lines.)
Recess penetration gaging values are shown above. For method and gaging equipment see Section "Z" Addendum.

FORD MOTOR COMPANY
STANDARD PARTS

TAPPING SCREWS
ROUND HEAD

CROSS RECESSED
TYPES B & BP

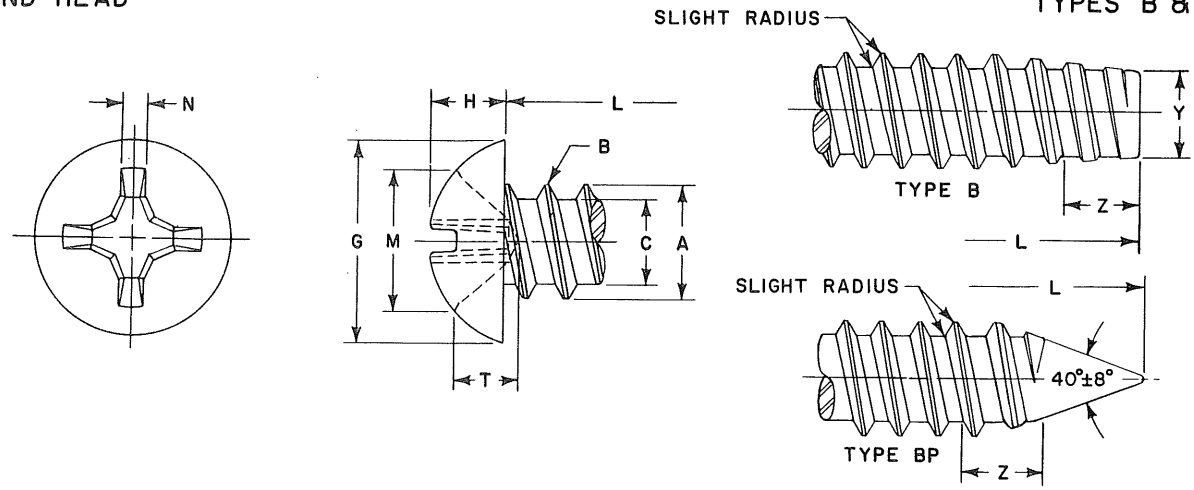

	Screw Size	4	5	6	7	8	10	12	1/4
B	Threads Per Inch	24	20	20	19	18	16	14	14
A	Major Dia. of Thread	.114 .110	.130 .126	.139 .135	.154 .149	.166 .161	.189 .183	.215 .209	.246 .240
C	Minor Dia. of Thread	.086 .082	.094 .090	.104 .099	.115 .109	.122 .116	.141 .135	.164 .157	.192 .185
G	Head Diameter	.211 .193	.236 .217	.260 .240	.285 .264	.309 .287	.359 .334	.408 .382	.472 .443
H	Head Height	.086 .075	.095 .083	.103 .091	.111 .099	.120 .107	.137 .123	.153 .139	.175 .160
M	Recess Diameter	.118 .105	.154 .141	.162 .149	.170 .157	.178 .165	.195 .182	.249 .236	.268 .255
T	Recess Depth	.072 .053	.074 .046	.084 .056	.092 .066	.101 .075	.119 .093	.125 .099	.147 .121
N	Recess Width	.019	.027	.027	.028	.030	.031	.032	.034
	Driver Size	1	2	2	2	2	2	3	3
	Penetration Gaging Depth	.065 .046	.063 .035	.073 .045	.081 .055	.090 .064	.108 .082	.108 .082	.130 .104
Y	Point Diameter	.079 .074	.087 .082	.095 .089	.105 .099	.112 .106	.130 .123	.152 .145	.179 .171
L	LENGTH	FORD PART NUMBERS					TYPE B		
1/4		52216-S	52217-S	52218-S		52215-S	52214-S		
3/8		52219-S	52220-S	52221-S	52222-S	52223-S	52224-S		
1/2		52225-S	52226-S	52227-S	52228-S	52229-S	52230-S	52231-S	52232-S
5/8		52233-S	52234-S	52235-S	52236-S	52237-S	52238-S	52239-S	52240-S
3/4		52241-S	52242-S	52243-S	52244-S	52245-S	52246-S	52247-S	52248-S
7/8				52249-S	52250-S	52251-S	52252-S	52253-S	52254-S
1				52255-S	52256-S	52257-S	52258-S	52259-S	52260-S
1 1/4						52261-S	52262-S	52263-S	52264-S
1 1/2						52265-S	52266-S	52267-S	52268-S
1 3/4							52269-S	52270-S	52271-S
L	LENGTH	FORD PART NUMBERS					TYPE BP		
1/4		52276-S	52277-S	52278-S					
3/8		52279-S	52280-S	52281-S	52282-S	52283-S	52284-S		
1/2		52285-S	52286-S	52287-S	52288-S	52289-S	52290-S	52291-S	52292-S
5/8			52293-S	52294-S	52295-S	52296-S	52297-S	52298-S	52299-S
3/4				52300-S	52301-S	52302-S	52303-S	52304-S	52305-S
7/8				52306-S	52307-S	52308-S	52309-S	52310-S	52311-S
1				52312-S	52313-S	52314-S	52315-S	52316-S	52317-S
1 1/4						52318-S	52319-S	52320-S	52321-S
1 1/2							52322-S	52323-S	52324-S
1 3/4							52325-S	52326-S	52327-S

NOTES: For General Specifications see Page D-950.01. For Finishes see Section "Z" Addendum.
MATERIAL: Steel, case hardened.
Screw lengths greater than "short length" series, (Part Numbers shown below double line) shall have a taper length "Z" of 2- to 2-1/2 times the pitch distance. (See General Specifications).
Short length screws (Part Numbers shown above double lines) shall have a taper length "Z" of 1-1/2 to 2- times the pitch distance. (See General Specifications).
Type BP short length screws (Part Numbers shown above double line) are impractical to manufacture.
Recess penetration gaging values are shown above. For method and gaging equipment see Section "Z" Addendum.

FORD MOTOR COMPANY
STANDARD PARTS

TAPPING SCREWS
ROUND HEAD

CROSS RECESSED
TYPE C

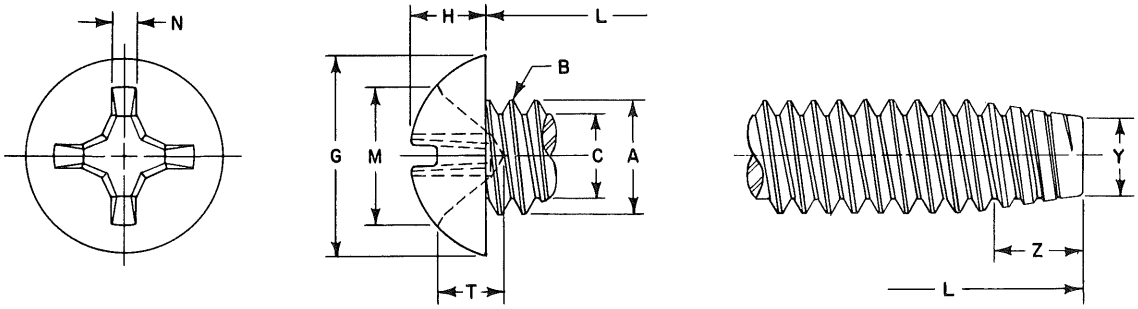

	Screw Size	6	8	10		12	1/4		5/16		3/8	
B	Threads Per Inch	32	32	24	32	24	20	28	18	24	16	24
A	Major Dia. of Thread	.1380 .1326	.1640 .1586	.1900 .1834	.1900 .1846	.2160 .2094	.2500 .2428	.2500 .2438	.3125 .3043	.3125 .3059	.3750 .3660	.3750 .3684
C	Minor Dia. of Thread (Max.)	.0997	.1257	.1389	.1517	.1649	.1887	.2062	.2443	.2614	.2983	.3239
G	Head Diameter	.260 .240	.309 .287	.359 .334	.359 .334	.408 .382	.472 .443	.472 .443	.590 .557	.590 .557	.708 .670	.708 .670
H	Head Height	.103 .091	.120 .107	.137 .123	.137 .123	.153 .139	.175 .160	.175 .160	.216 .198	.216 .198	.256 .237	.256 .237
M	Recess Diameter	.162 .149	.178 .165	.195 .182	.195 .182	.249 .236	.268 .255	.268 .255	.308 .295	.308 .295	.387 .374	.387 .374
T	Recess Depth	.084 .056	.101 .075	.119 .093	.119 .093	.125 .099	.147 .121	.147 .121	.187 .161	.187 .161	.228 .202	.228 .202
N	Recess Width	.027	.030	.031	.031	.032	.034	.034	.040	.040	.064	.064
	Driver Size	2	2	2	2	3	3	3	3	3	4	4
	Penetration Gaging Depth	.073 .045	.090 .064	.108 .082	.108 .082	.108 .082	.130 .104	.130 .104	.170 .144	.170 .144	.208 .182	.208 .182
Y	Point Diameter	.106 .095	.132 .121	.147 .133	.158 .147	.173 .159	.198 .181	.213 .201	.255 .236	.269 .255	.310 .289	.332 .318
L	LENGTH	FORD PART NUMBERS										
	1/4	51340-S	51341-S	51342-S	51343-S							
	3/8	51344-S	51345-S	51346-S	51347-S	51348-S	51349-S	51350-S	51351-S	51352-S		
	1/2	51353-S	51354-S	51355-S	51356-S	51357-S	51358-S	51359-S	51360-S	51361-S	51362-S	51363-S
	5/8	51364-S	51365-S	51366-S	51367-S	51368-S	51369-S	51370-S	51371-S	51372-S	51373-S	51374-S
	3/4	51375-S	51376-S	51377-S	51378-S	51379-S	51380-S	51381-S	51382-S	51383-S	51384-S	51385-S
	7/8	51386-S	51387-S	51388-S	51389-S	51390-S	51391-S	51392-S	51393-S	51394-S	51395-S	51396-S
	1	51397-S	51398-S	51399-S	51440-S	51401-S	51402-S	51403-S	51404-S	51405-S	51406-S	51407-S
	1 1/4	51408-S	51409-S	51410-S	51441-S	51412-S	51413-S	51414-S	51415-S	51416-S	51417-S	51418-S
	1 1/2	51419-S	51420-S	51421-S	51442-S	51423-S	51424-S	51425-S	51426-S	51427-S	51428-S	51429-S
	1 3/4		51430-S	51431-S	51432-S	51433-S	51434-S	51435-S	51436-S	51437-S	51438-S	51439-S

NOTES: For General Specifications see Page D-950.01. For Finishes see Section "Z" Addendum.
MATERIAL: Steel, case hardened.
Screws longer than 8 pitches in length (Part Numbers shown below double line) shall have a taper length "Z" of 3-1/2 to 4-1/2 times the pitch distance. (See General Specifications.)
Screws 8 pitches or shorter in length (Part Numbers shown above double line) shall have a taper length "Z" of 2-1/2 to 3-1/2 times the pitch distance. (See General Specifications.)
Recess penetration gaging values are shown above. For method and gaging equipment see Section "Z" Addendum.

FORD MOTOR COMPANY
STANDARD PARTS

TAPPING SCREWS
ROUND HEAD

CROSS RECESSED
TYPES D, F, & G

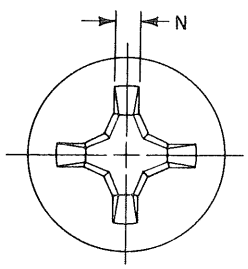

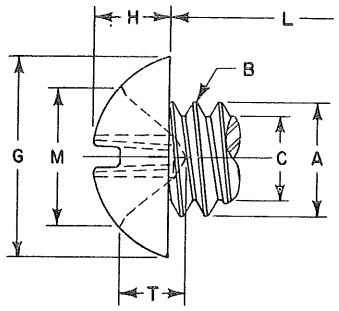

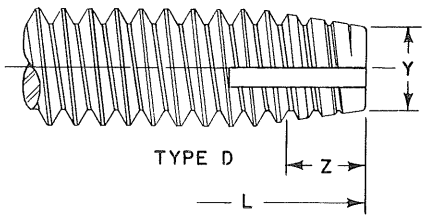

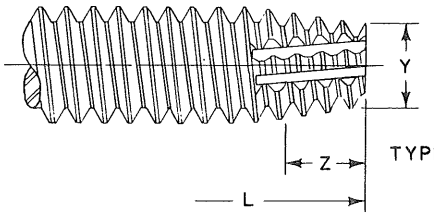

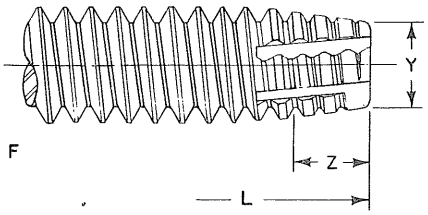

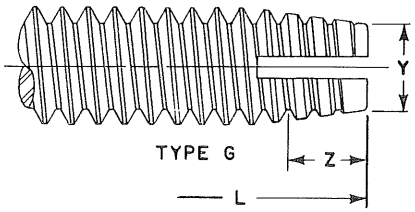

	Screw Size	6	8	10		12	1/4		5/16		3/8	
B	Threads Per Inch	32	32	24	32	24	20	28	18	24	16	24
A	Major Dia. of Thread	.1380 .1326	.1640 .1586	.1900 .1834	.1900 .1846	.2160 .2094	.2500 .2428	.2500 .2438	.3125 .3043	.3125 .3059	.3750 .3660	.3750 .3684
C	Minor Dia. of Thread (Max.)	.0997	.1257	.1389	.1517	.1649	.1887	.2062	.2443	.2614	.2983	.3239
G	Head Diameter	.260 .240	.309 .287	.359 .334	.359 .334	.408 .382	.472 .443	.472 .443	.590 .557	.590 .557	.708 .670	.708 .670
H	Head Height	.103 .091	.120 .107	.137 .123	.137 .123	.153 .139	.175 .160	.175 .160	.216 .198	.216 .198	.256 .237	.256 .237
M	Recess Diameter	.162 .149	.178 .165	.195 .182	.195 .182	.249 .236	.268 .255	.268 .255	.308 .295	.308 .295	.387 .374	.387 .374
T	Recess Depth	.084 .056	.101 .075	.119 .093	.119 .093	.125 .099	.147 .121	.147 .121	.187 .161	.187 .161	.228 .202	.228 .202
N	Recess Width	.027	.030	.031	.031	.032	.034	.034	.040	.040	.064	.064
	Driver Size	2	2	2	2	3	3	3	3	3	4	4
	Penetration Gaging Depth	.073 .045	.090 .064	.108 .082	.108 .082	.108 .082	.130 .104	.130 .104	.170 .144	.170 .144	.208 .182	.208 .182
Y	Point Diameter	.106 .095	.132 .121	.147 .133	.158 .147	.173 .159	.198 .181	.213 .201	.255 .236	.269 .255	.310 .289	.332 .318
L	LENGTH	FORD PART NUMBERS										
1/4		51240-S	51241-S	51242-S	51243-S							
3/8		51244-S	51245-S	51246-S	51247-S	51248-S	51249-S	51250-S	51251-S	51252-S		
1/2		51253-S	51254-S	51255-S	51256-S	51257-S	51258-S	51259-S	51260-S	51261-S	51262-S	51263-S
5/8		51264-S	51265-S	51266-S	51267-S	51268-S	51269-S	51270-S	51271-S	51272-S	51273-S	51274-S
3/4		51275-S	51276-S	51277-S	51278-S	51279-S	51280-S	51281-S	51282-S	51283-S	51284-S	51285-S
7/8		51286-S	51287-S	51288-S	51289-S	51290-S	51291-S	51292-S	51293-S	51294-S	51295-S	51296-S
1		51297-S	51298-S	51299-S	51300-S	51301-S	51302-S	51303-S	51304-S	51305-S	51306-S	51307-S
1 1/4		51308-S	51309-S	51310-S	51311-S	51312-S	51313-S	51314-S	51315-S	51316-S	51317-S	51318-S
1 1/2		51319-S	51320-S	51321-S	51322-S	51323-S	51324-S	51325-S	51326-S	51327-S	51328-S	51329-S
1 3/4			51330-S	51331-S	51332-S	51333-S	51334-S	51335-S	51336-S	51337-S	51338-S	51339-S

NOTES: For General Specifications see Page D-950.01. For Finishes see Section "Z" Addendum.
MATERIAL: Steel, case hardened.
Screws longer than 8 pitches in length (Part Numbers shown below double line) shall have a taper length "Z" of 3-1/2 to 4-1/2 times the pitch distance. (See General Specifications.)
Screws 8 pitches or shorter in length (Part Numbers shown above double line) shall have a taper length "Z" of 2-1/2 to 3-1/2 times the pitch distance. (See General Specifications.)
Recess penetration gaging values are shown above. For method and gaging equipment see Section "Z" Addendum.

FORD MOTOR COMPANY
STANDARD PARTS

DRIVE SCREWS
FLAT HEAD

TYPE U

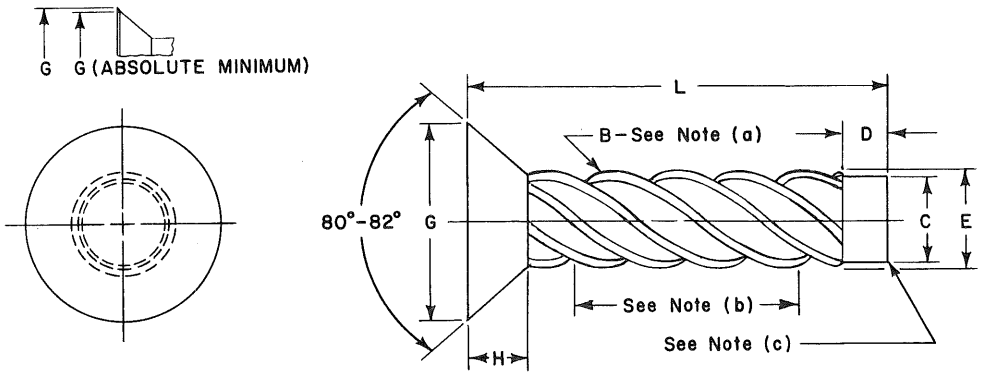

	Screw Size	00	0	2	4	6	7	8	10	12	14
B	No. of Thread Starts	6	6	8	7	7	8	8	8	8	9
E	Outside Diameter	.060 .057	.075 .072	.100 .097	.116 .112	.140 .136	.154 .150	.167 .162	.182 .177	.212 .206	.242 .236
C	Pilot Diameter	.049 .046	.063 .060	.083 .080	.096 .092	.116 .112	.126 .122	.136 .132	.150 .146	.177 .173	.202 .198
G	Head Dia. (Max. Sharp) (Min. Sharp) (Abs. Min.)	.114 .102	.147 .135	.176 .164	.225 .207 .195	.279 .257 .244	.305 .283 .268	.332 .308 .292	.385 .359 .340	.438 .410 .389	.491 .461 .437
H	Head Height (Ref.)	.038	.049	.058	.067	.083	.091	.100	.116	.132	.148
L	LENGTH	FORD PART NUMBERS									
1/8 3/16 1/4 5/16		92125-S 92129-S 92135-S 92143-S	92126-S 92130-S 92136-S 92144-S	92131-S 92137-S 92145-S	92138-S 92146-S	92139-S 92147-S	92140-S 92148-S	92149-S			
3/8 1/2 5/8 3/4				92153-S 92173-S	92154-S 92174-S	92155-S 92175-S 92191-S	92156-S 92176-S 92192-S	92157-S 92177-S 92193-S 92205-S	92158-S 92178-S 92194-S 92206-S	92159-S 92179-S 92195-S 92207-S	92180-S 92196-S 92208-S

USE DRILL SIZE

Number or Size	55	51	44	37	31	29	27	20	11	2
Decimal Equivalent	.052	.067	.086	.104	.120	.136	.144	.161	.191	.221

SCREW LENGTH AND PILOT LENGTHS

L	Screw Length	1/8	3/16	1/4	5/16	3/8	1/2	5/8	3/4	1-and over
D	Pilot Length	.047	.047	.047	.047	.062	.062	.078	.078	.125

NOTES: For General Specifications see Page D-950.01. For Finishes see Section "Z" Addendum.
MATERIAL: Steel - SAE 1016, SAE 1018, SAE 1022, or equivalent.
(a) The helix angle shall be 45° to 65°.
(b) The thread at the starting end of the screw and under the head may be unfinished for a length of one half of the maximum diameter of the screw, due to the natural flow of the material in the process of the thread rolling operation.
(c) The blunt end of the pilot, as illustrated above, may have a slight angle, due to the natural flow of material in the cut-off process.

FORD MOTOR COMPANY
STANDARD PARTS

DRIVE SCREWS
ROUND HEAD

TYPE U

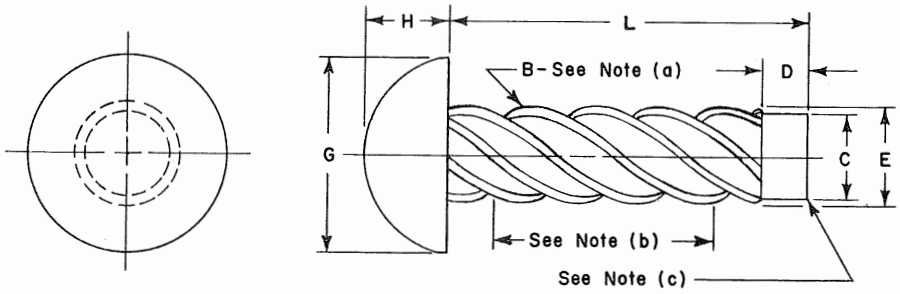

	Screw Size	00	0	2	4	6	7	8	10	12	14
B	No. of Thread Starts	6	6	8	7	7	8	8	8	8	9
E	Outside Diameter	.060 .057	.075 .072	.100 .097	.116 .112	.140 .136	.154 .150	.167 .162	.182 .177	.212 .206	.242 .236
C	Pilot Diameter	.049 .046	.063 .060	.083 .080	.096 .092	.116 .112	.126 .122	.136 .132	.150 .146	.177 .173	.202 .198
G	Head Diameter	.099 .090	.127 .118	.162 .146	.211 .193	.260 .240	.285 .264	.309 .287	.359 .334	.408 .382	.457 .429
H	Head Height	.034 .026	.049 .041	.069 .059	.086 .075	.103 .091	.111 .099	.120 .107	.137 .123	.153 .139	.170 .155
L	LENGTH	FORD PART NUMBERS									
1/8 3/16 1/4 5/16		92025-S 92029-S 92035-S 92043-S	92026-S 92030-S 92036-S 92044-S	92027-S 92031-S 92037-S 92045-S	92028-S 92032-S 92038-S 92046-S	92033-S 92039-S 92047-S	92034-S 92040-S 92048-S	92041-S 92049-S	92042-S 92050-S		
3/8 1/2 5/8 3/4				92053-S 92073-S	92054-S 92074-S	92055-S 92075-S 92091-S	92056-S 92076-S 92092-S	92057-S 92077-S 92093-S 92105-S	92058-S 92078-S 92094-S 92106-S	92059-S 92079-S 92095-S 92107-S	92060-S 92080-S 92096-S 92108-S

USE DRILL SIZE

Number or Size	55	51	44	37	31	29	27	20	11	2
Decimal Equivalent	.052	.067	.086	.104	.120	.136	.144	.161	.191	.221

SCREW LENGTH AND PILOT LENGTHS

L	Screw Length	1/8	3/16	1/4	5/16	3/8	1/2	5/8	3/4	1-and over
D	Pilot Length	.047	.047	.047	.047	.062	.062	.078	.078	.125

NOTES: For General Specifications see Page D-950.01. For Finishes see Section "Z" Addendum.
MATERIAL: Steel - SAE 1016, SAE 1018, SAE 1022 or equivalent.
(a) The helix angle shall be 45° to 65°.
(b) The thread at the starting end of the screw and under the head may be unfinished for a length of one half of the maximum diameter of the screw, due to the natural flow of the material in the process of the thread rolling operation.
(c) The blunt end of the pilot, as illustrated above, may have a slight angle, due to the natural flow of material in the cut off process.

FORD MOTOR COMPANY
STANDARD PARTS

WOOD SCREWS
FLAT HEAD

SLOTTED

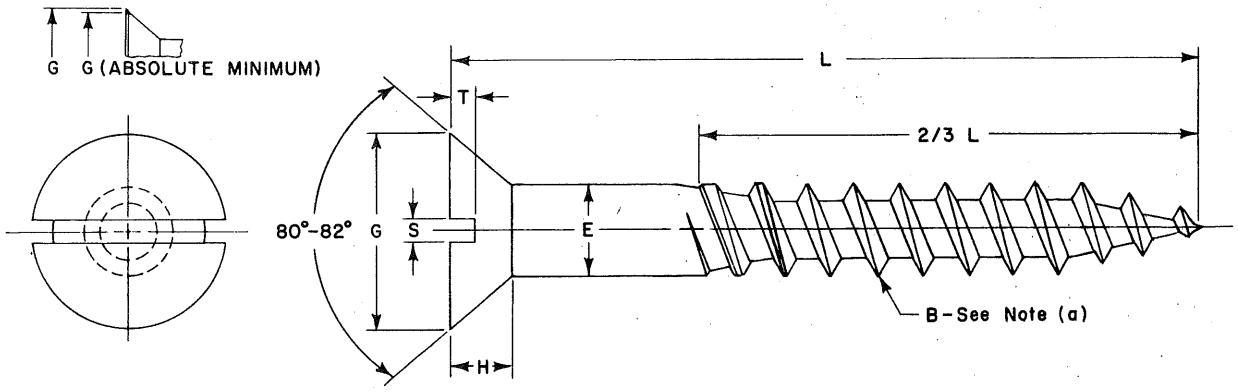

	Screw Size	3	4	5	6	7	8	9	10	12	14	16
B	Threads Per Inch	24	22	20	18	16	15	14	13	11	10	9
E	Body Diameter	.103 .092	.116 .105	.129 .118	.142 .131	.155 .144	.168 .157	.181 .170	.194 .183	.220 .209	.246 .235	.272 .261
G	Head Dia. (Max. Sharp) (Min. Sharp) (Abs. Min.)	.199 .181 .171	.225 .207 .195	.252 .232 .220	.279 .257 .244	.305 .283 .268	.332 .308 .292	.358 .334 .316	.385 .359 .340	.438 .410 .389	.491 .461 .437	.544 .512 .485
H	Head Height (Ref.)	.059	.067	.075	.083	.091	.100	.108	.116	.132	.148	.164
S	Slot Width	.035 .027	.039 .031	.043 .035	.048 .039	.048 .039	.054 .045	.054 .045	.060 .050	.067 .056	.075 .064	.075 .064
T	Slot Depth	.027 .017	.030 .020	.034 .022	.038 .024	.041 .027	.045 .029	.049 .032	.053 .034	.060 .039	.068 .044	.075 .049
L	LENGTH	FORD PART NUMBERS							MATERIAL: SAE-1018 or SAE 1022 Steel			
1/4 3/8 1/2		31850-S 31859-S 31868-S	31851-S 31860-S 31869-S	31852-S 31861-S 31870-S	31853-S 31862-S 31871-S	31854-S 31863-S 31872-S	31855-S 31864-S 31873-S	31856-S 31865-S 31874-S	31857-S 31866-S 31875-S	31858-S 31867-S 31876-S	31877-S	31878-S
5/8 3/4 7/8 1		31879-S 31890-S 31901-S 31912-S	31880-S 31891-S 31902-S 31913-S	31881-S 31892-S 31903-S 31914-S	31882-S 31893-S 31904-S 31915-S	31883-S 31894-S 31905-S 31916-S	31884-S 31895-S 31906-S 31917-S	31885-S 31896-S 31907-S 31918-S	31886-S 31897-S 31908-S 31919-S	31887-S 31898-S 31909-S 31920-S	31888-S 31899-S 31910-S 31921-S	31889-S 31900-S 31911-S 31922-S
1 1/4 1 1/2 1 3/4 2		31923-S 31934-S 31945-S 31956-S	31924-S 31935-S 31946-S 31957-S	31925-S 31936-S 31947-S 31958-S	31926-S 31937-S 31948-S 31959-S	31927-S 31938-S 31949-S 31960-S	31928-S 31939-S 31950-S 31961-S	31929-S 31940-S 31951-S 31962-S	31930-S 31941-S 31952-S 31963-S	31931-S 31942-S 31953-S 31964-S	31932-S 31943-S 31954-S 31965-S	31933-S 31944-S 31955-S 31966-S
2 1/4 2 1/2 2 3/4 3		31967-S	31968-S	31969-S 31978-S 31987-S	31970-S 31979-S 31988-S	31971-S 31980-S 31989-S 31996-S	31972-S 31981-S 31990-S 31997-S	31973-S 31982-S 31991-S 31998-S	31974-S 31983-S 31992-S 31999-S	31975-S 31984-S 31993-S 32000-S	31976-S 31985-S 31994-S 32001-S	31977-S 31986-S 31995-S 32002-S
3 1/2 4 4 1/2 5						32003-S	32004-S	32005-S 32010-S 32015-S 32020-S	32006-S 32011-S 32016-S 32021-S	32007-S 32012-S 32017-S 32022-S	32008-S 32013-S 32018-S 32023-S	32009-S 32014-S 32019-S 32024-S
L	LENGTH	FORD PART NUMBERS							MATERIAL: SAE 80-B Brass			
1/4 3/8 1/2		32050-S 32059-S 32068-S	32051-S 32060-S 32069-S	32052-S 32061-S 32070-S	32053-S 32062-S 32071-S	32054-S 32063-S 32072-S	32055-S 32064-S 32073-S	32056-S 32065-S 32074-S	32057-S 32066-S 32075-S	32058-S 32067-S 32076-S	32077-S	32078-S
5/8 3/4 7/8 1		32079-S 32090-S 32101-S 32112-S	32080-S 32091-S 32102-S 32113-S	32081-S 32092-S 32103-S 32114-S	32082-S 32093-S 32104-S 32115-S	32083-S 32094-S 32105-S 32116-S	32084-S 32095-S 32106-S 32117-S	32085-S 32096-S 32107-S 32118-S	32086-S 32097-S 32108-S 32119-S	32087-S 32098-S 32109-S 32120-S	32088-S 32099-S 32110-S 32121-S	32089-S 32100-S 32111-S 32122-S
1 1/4 1 1/2 1 3/4 2		32123-S 32134-S 32145-S 32156-S	32124-S 32135-S 32146-S 32157-S	32125-S 32136-S 32147-S 32158-S	32126-S 32137-S 32148-S 32159-S	32127-S 32138-S 32149-S 32160-S	32128-S 32139-S 32150-S 32161-S	32129-S 32140-S 32151-S 32162-S	32130-S 32141-S 32152-S 32163-S	32131-S 32142-S 32153-S 32164-S	32132-S 32143-S 32154-S 32165-S	32133-S 32144-S 32155-S 32166-S
2 1/4 2 1/2 2 3/4 3		32167-S	32168-S	32169-S 32178-S 32187-S	32170-S 32179-S 32188-S	32171-S 32180-S 32189-S 32196-S	32172-S 32181-S 32190-S 32197-S	32173-S 32182-S 32191-S 32198-S	32174-S 32183-S 32192-S 32199-S	32175-S 32184-S 32193-S 32200-S	32176-S 32185-S 32194-S 32201-S	32177-S 32186-S 32195-S 32202-S
3 1/2 4 4 1/2 5						32203-S	32204-S	32205-S 32210-S 32215-S 32220-S	32206-S 32211-S 32216-S 32221-S	32207-S 32212-S 32217-S 32222-S	32208-S 32213-S 32218-S 32223-S	32209-S 32214-S 32219-S 32224-S

NOTES: For General Specifications see Page D-950.01. For Finishes see Section "Z" Addendum.
(a) Maximum permissible variation in number of threads per inch is plus or minus 10 per cent.

FORD MOTOR COMPANY
STANDARD PARTS

WOOD SCREWS
OVAL HEAD

SLOTTED

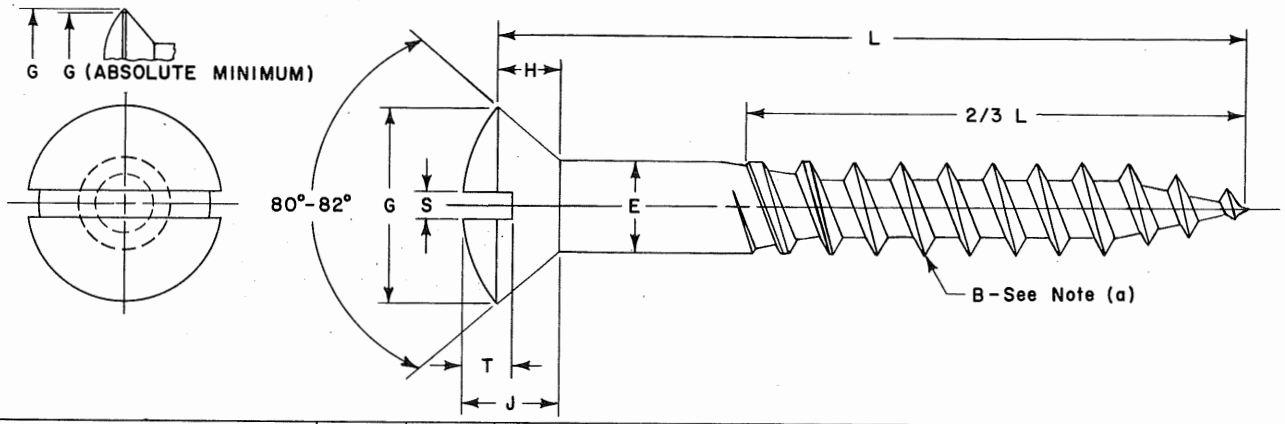

	Screw Size	3	4	5	6	7	8	9	10	12	14	16
B	Threads Per Inch	24	22	20	18	16	15	14	13	11	10	9
E	Body Diameter	.103 .092	.116 .105	.129 .118	.142 .131	.155 .144	.168 .157	.181 .170	.194 .183	.220 .209	.246 .235	.272 .261
G	Head Dia. (Max. Sharp) (Min. Sharp) (Abs. Min.)	.199 .181 .171	.225 .207 .195	.252 .232 .220	.279 .257 .244	.305 .283 .268	.332 .308 .292	.358 .334 .316	.385 .359 .340	.438 .410 .389	.491 .461 .437	.544 .512 .485
H	Side Height (Ref.)	.059	.067	.075	.083	.091	.100	.108	.116	.132	.148	.164
J	Total Head Height	.092 .073	.104 .084	.116 .095	.128 .105	.140 .116	.152 .126	.164 .137	.176 .148	.200 .169	.224 .190	.248 .212
S	Slot Width	.035 .027	.039 .031	.043 .035	.048 .039	.048 .039	.054 .045	.054 .045	.060 .050	.067 .056	.075 .064	.075 .064
T	Slot Depth	.052 .043	.059 .049	.067 .055	.074 .060	.081 .066	.088 .072	.095 .078	.103 .084	.117 .096	.132 .108	.146 .120
L	LENGTH	FORD PART NUMBERS MATERIAL: SAE-1018 or SAE-1022 Steel										
1/4		32410-S	32411-S	32412-S	32413-S	32414-S	32415-S	32416-S	32417-S	32418-S		
3/8 1/2 5/8 3/4		32419-S 32428-S 32439-S 32450-S	32420-S 32429-S 32440-S 32451-S	32421-S 32430-S 32441-S 32452-S	32422-S 32431-S 32442-S 32453-S	32423-S 32432-S 32443-S 32454-S	32424-S 32433-S 32444-S 32455-S	32425-S 32434-S 32445-S 32456-S	32426-S 32435-S 32446-S 32457-S	32427-S 32436-S 32447-S 32458-S	32437-S 32448-S 32459-S	32438-S 32449-S 32460-S
7/8 1 1 1/4 1 1/2		32461-S 32472-S 32483-S 32494-S	32462-S 32473-S 32484-S 32495-S	32463-S 32474-S 32485-S 32496-S	32464-S 32475-S 32486-S 32497-S	32465-S 32476-S 32487-S 32498-S	32466-S 32477-S 32488-S 32499-S	32467-S 32478-S 32489-S 32500-S	32468-S 32479-S 32490-S 32501-S	32469-S 32480-S 32491-S 32502-S	32470-S 32481-S 32492-S 32503-S	32471-S 32482-S 32493-S 32504-S
1 3/4 2 2 1/4 2 1/2		32505-S 32516-S 32527-S 32538-S	32506-S 32517-S 32528-S 32539-S	32507-S 32518-S 32529-S 32540-S	32508-S 32519-S 32530-S 32541-S	32509-S 32520-S 32531-S 32542-S	32510-S 32521-S 32532-S 32543-S	32511-S 32522-S 32533-S 32544-S	32512-S 32523-S 32534-S 32545-S	32513-S 32524-S 32535-S 32546-S	32514-S 32525-S 32536-S 32547-S	32515-S 32526-S 32537-S 32548-S
2 3/4 3 3 1/2 4		32549-S 32560-S	32550-S 32561-S	32551-S 32562-S	32552-S 32563-S	32553-S 32564-S 32571-S 32578-S	32554-S 32565-S 32572-S 32579-S	32555-S 32566-S 32573-S 32580-S	32556-S 32567-S 32574-S 32581-S	32557-S 32568-S 32575-S 32582-S	32558-S 32569-S 32576-S 32583-S	32559-S 32570-S 32577-S 32584-S
L	LENGTH	FORD PART NUMBERS MATERIAL: SAE 80-B Brass										
1/4		32600-S	32601-S	32602-S	32603-S	32604-S	32605-S	32606-S	32607-S	32608-S		
3/8 1/2 5/8 3/4		32609-S 32618-S 32629-S 32640-S	32610-S 32619-S 32630-S 32641-S	32611-S 32620-S 32631-S 32642-S	32612-S 32621-S 32632-S 32643-S	32613-S 32622-S 32633-S 32644-S	32614-S 32623-S 32634-S 32645-S	32615-S 32624-S 32635-S 32646-S	32616-S 32625-S 32636-S 32647-S	32617-S 32626-S 32637-S 32648-S	32627-S 32638-S 32649-S	32628-S 32639-S 32650-S
7/8 1 1 1/4 1 1/2		32651-S 32662-S 32673-S 32684-S	32652-S 32663-S 32674-S 32685-S	32653-S 32664-S 32675-S 32686-S	32654-S 32665-S 32676-S 32687-S	32655-S 32666-S 32677-S 32688-S	32656-S 32667-S 32678-S 32689-S	32657-S 32668-S 32679-S 32690-S	32658-S 32669-S 32680-S 32691-S	32659-S 32670-S 32681-S 32692-S	32660-S 32671-S 32682-S 32693-S	32661-S 32672-S 32683-S 32694-S
1 3/4 2 2 1/4 2 1/2		32695-S 32706-S 32717-S 32728-S	32696-S 32707-S 32718-S 32729-S	32697-S 32708-S 32719-S 32730-S	32698-S 32709-S 32720-S 32731-S	32699-S 32710-S 32721-S 32732-S	32700-S 32711-S 32722-S 32733-S	32701-S 32712-S 32723-S 32734-S	32702-S 32713-S 32724-S 32735-S	32703-S 32714-S 32725-S 32736-S	32704-S 32715-S 32726-S 32737-S	32705-S 32716-S 32727-S 32738-S
2 3/4 3 3 1/2 4		32739-S 32750-S	32740-S 32751-S	32741-S 32752-S	32742-S 32753-S	32743-S 32754-S 32761-S 32768-S	32744-S 32755-S 32762-S 32769-S	32745-S 32756-S 32763-S 32770-S	32746-S 32757-S 32764-S 32771-S	32747-S 32758-S 32765-S 32772-S	32748-S 32759-S 32766-S 32773-S	32749-S 32760-S 32767-S 32774-S

NOTES: For General Specifications see Page D-950.01. For Finishes see Section "Z" Addendum.
(a) Maximum permissible variation in number of threads per inch is plus or minus 10 per cent.

FORD MOTOR COMPANY
STANDARD PARTS

WOOD SCREWS
ROUND HEAD

SLOTTED

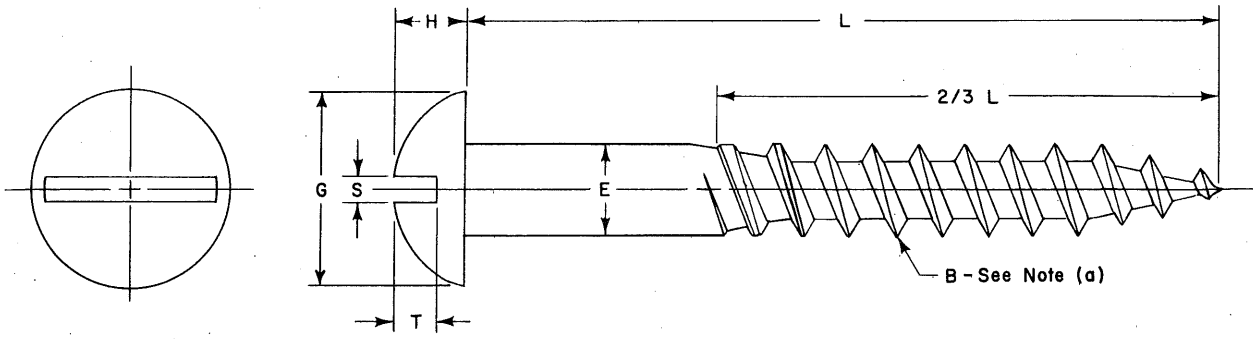

	Screw Size	3	4	5	6	7	8	9	10	12	14	16
B	Threads Per Inch	24	22	20	18	16	15	14	13	11	10	9
E	Body Diameter	.103 .092	.116 .105	.129 .118	.142 .131	.155 .144	.168 .157	.181 .170	.194 .183	.220 .209	.246 .235	.272 .261
G	Head Diameter	.187 .169	.211 .193	.236 .217	.260 .240	.285 .264	.309 .287	.334 .311	.359 .334	.408 .382	.457 .429	.506 .476
H	Head Height	.078 .067	.086 .075	.095 .083	.103 .091	.111 .099	.120 .107	.128 .115	.137 .123	.153 .139	.170 .155	.187 .171
S	Slot Width	.035 .027	.039 .031	.043 .035	.048 .039	.048 .039	.054 .045	.054 .045	.060 .050	.067 .056	.075 .064	.075 .064
T	Slot Depth	.053 .040	.058 .044	.063 .047	.068 .051	.072 .055	.077 .058	.082 .062	.087 .065	.096 .073	.106 .080	.115 .087
L	LENGTH	FORD PART NUMBERS							MATERIAL: SAE 1018 or SAE 1022 Steel			
1/4		32225-S	32226-S	32227-S	32228-S	32229-S	32230-S	32231-S	32232-S	32233-S		
3/8 1/2 5/8 3/4		32234-S 32243-S 32254-S 32265-S	32235-S 32244-S 32255-S 32266-S	32236-S 32245-S 32256-S 32267-S	32237-S 32246-S 32257-S 32268-S	32238-S 32247-S 32258-S 32269-S	32239-S 32248-S 32259-S 32270-S	32240-S 32249-S 32260-S 32271-S	32241-S 32250-S 32261-S 32272-S	32242-S 32251-S 32262-S 32273-S	32252-S 32263-S 32274-S	32253-S 32264-S 32275-S
7/8 1 1 1/4 1 1/2		32276-S 32287-S 32298-S 32309-S	32277-S 32288-S 32299-S 32310-S	32278-S 32289-S 32300-S 32311-S	32279-S 32290-S 32301-S 32312-S	32280-S 32291-S 32302-S 32313-S	32281-S 32292-S 32303-S 32314-S	32282-S 32293-S 32304-S 32315-S	32283-S 32294-S 32305-S 32316-S	32284-S 32295-S 32306-S 32317-S	32285-S 32296-S 32307-S 32318-S	32286-S 32297-S 32308-S 32319-S
1 3/4 2 2 1/4 2 1/2		32320-S 32331-S 32342-S 32353-S	32321-S 32332-S 32343-S 32354-S	32322-S 32333-S 32344-S 32355-S	32323-S 32334-S 32345-S 32356-S	32324-S 32335-S 32346-S 32357-S	32325-S 32336-S 32347-S 32358-S	32326-S 32337-S 32348-S 32359-S	32327-S 32338-S 32349-S 32360-S	32328-S 32339-S 32350-S 32361-S	32329-S 32340-S 32351-S 32362-S	32330-S 32341-S 32352-S 32363-S
2 3/4 3 3 1/2 4		32364-S 32375-S	32365-S 32376-S	32366-S 32377-S	32367-S 32378-S	32368-S 32379-S 32386-S 32393-S	32369-S 32380-S 32387-S 32394-S	32370-S 32381-S 32388-S 32395-S	32371-S 32382-S 32389-S 32396-S	32372-S 32383-S 32390-S 32397-S	32373-S 32384-S 32391-S 32398-S	32374-S 32385-S 32392-S 32399-S

NOTES: For General Specifications see Page D-950.01. For Finishes see Section "Z" Addendum.
(a) Maximum permissible variation in number of threads per inch is plus or minus 10 per cent.

GENERAL SPECIFICATIONS

MATERIAL: Tapping screws shall be Steel - hardened, case hardened, or otherwise processed to meet the requirements of the Test Specifications.

Drive Screws: Drive screws shall be Steel - SAE 1016, SAE 1018, or SAE 1022, hardened sufficiently to produce mating threads in SAE 1010-1020 steel and/or cast iron without shearing threads or breaking screw.

Wood Screws: Wood screws shall be Steel - SAE 1018 or SAE 1022, or Brass - SAE 80-B as specified.

HEAD HEIGHT: The head height is a metal to metal measurement and does not include material theoretically removed by recess or slot. Head height therefore extends from the top of the head to the bearing surface for 90° heads; from the intersection of the bearing surface and the basic body diameter[1] for countersunk heads; and to the undercut for undercut heads.

SIDE HEIGHT: Side height is a reference dimension which extends axially from the largest diameter of the bearing surface of countersunk heads to the intersection of the bearing surface and the basic body diameter[1] for full form heads and to the undercut for undercut heads.

HEAD EDGES: A slight rounding of all edges and corners of the hexagon heads is permissible provided the diameter of the bearing surface is not less than 90% of the minimum "Across Flats" dimension.

Edges of countersunk heads may be rounded but not to less than the absolute minimum diameter specified in the tables.

HEAD TAPER: Taper of sides of hexagon (angle between one side and the axis) shall not exceed 2° or .004 inch whichever is greater, the specified width across flats being the larger dimension.

HEAD DIMENSIONS: Dimensions across flats and across corners of hexagon heads shall be measured at the point of maximum material.

RECESS DEPTH: Recess depth is the axial distance from the rounded intersection of the head surface and maximum diameter of the recess, to the bottom of the recess.

SLOT DEPTH: Slot depth is the axial distance from the highest part of the head to the intersection of the bottom of the slot with the head surface.

[1]This intersection is not always the junction of bearing surface and shank.

GENERAL SPECIFICATIONS

BEARING SURFACE: The bearing surface of 90° heads shall be at right angles to the axis of the body within 2°.

ECCENTRICITY OF HEADS: Tapping screw heads shall not be eccentric[1] with the screw bodies by more than 3% of the maximum head diameter or the maximum width across flats as applicable.

ECCENTRICITY OF SLOTS: Slots in tapping screw heads shall not be eccentric[1] with screw bodies by more than 6% of the nominal body diameter or .010 inch, whichever is greater.

Slots in wood screw heads shall not be eccentric[1] with the axis of the screw body by more than 6% of the nominal diameter of the screw head or .015 inch, whichever is greater.

ECCENTRICITY OF RECESSES: Recesses in tapping screw heads shall not be eccentric[1] with screw bodies by more than 6% of the nominal body diameter or .015 inch, whichever is greater.

Recesses in wood screw heads shall not be eccentric[1] with the axis of the screw body by more than 6% of the nominal diameter of the screw head or .015 inch, whichever is greater.

UNDER HEAD FILLETS: Under head radii shall not exceed values shown in Table 1. These values were computed on the following basis:

(1) Maximum fillet radii for 90° tapping screw heads and undercut countersunk head types equals 15% of the basic body diameter,
(2) Maximum fillet radii for countersunk tapping screw heads equals 40% of the basic body diameter,
(3) Nominal fillet radii for 90° wood screw heads equals .016 inch for sizes No. 9 and smaller and .031 inch for sizes greater than No. 9.

TABLE 1 - UNDER HEAD RADII

TAPPING AND DRIVE SCREWS											
Screw Size	4	5	6	7	8	10	12	14	1/4	5/16	3/8
90° Heads, Including Undercut C'sunk Heads	.017	.019	.021	.023	.025	.028	.032	.036	.038	.047	.056
Countersunk Heads	.045	.050	.055	.060	.066	.076	.086	.097	.100	.125	.150
WOOD SCREWS											
Screw Size	4	5	6	7	8	10	12	14	1/4	5/16	3/8
90° Heads	.016	.016	.016	.016	.016	.031	.031	.031	.031	.031	.031
Countersunk Heads	-	-	-	-	-	-	-	-	-	-	-

[1]Eccentricity is defined as one half of the total indicator reading.

GENERAL SPECIFICATIONS

HEAD GAGING: Recess penetration and protrusion gaging values are shown in the dimensional Tables. For method, gage tolerances and gaging equipment see Section "Z" Addendum.

LENGTH: The length of screws shall be measured from the largest diameter of the bearing surface of the head to the extreme point parallel to the screw axis.

TOLERANCES IN LENGTH: Tolerances in length shall be as shown in Table 2.

TABLE 2 - TOLERANCES IN LENGTH

Screw Type	Length Range Inches	Tolerance Plus	Tolerance Minus
Tapping Screws:			
Type A and BP	0 to 1- Incl.	.031	.031
	1-1/16 and Longer	.047	.047
Type B, C, D, F, and G	0 to 3/4 Incl.	.000	.031
	13/16 to 1-1/2 Incl.	.000	.047
	1-9/16 and Over	.000	.062
Drive Screws:			
Type U	1/8 to 3/8 Incl.	.016	.016
	7/16 and Over	.031	.031
Wood Screws:			
All Types	1/4 to 5/8 Incl.	.000	.031
	3/4 to 1-3/8 Incl.	.000	.047
	1-1/2 to 2-3/4 Incl.	.000	.062
	3- to 5 Incl.	.000	.094

THREADS AND POINTS: Maximum thread crest width of Type A, B, and BP tapping screws up to and including No. 8 is .004 inch, over No. 8 is .006 inch.

Tapered threads of Types B, BP, and C tapping screws have unfinished crests.

Tapping screws having Type D, F, and G points shall be tapered and fluted as shown. Details of taper and flute design shall be optional with manufacturer, provided they meet the performance requirements and the flutes extend through the first full thread.

Taper lengths for tapping screw points have been included in the dimensional tables in terms of pitch distance. For convenience decimal values have been computed and are presented in Table 3, charted against number of threads per inch.

Wood screws shall be furnished with gimlet points.

TABLE 3 - TABLE OF PITCH DISTANCES

Number of Threads per Inch		10	11	12	14	15	16	18	19	20	24	28	32
Number of Pitches	1	.1000	.0909	.0833	.0714	.0667	.0625	.0556	.0526	.0500	.0417	.0357	.0312
	1-1/2	.1500	.1364	.1250	.1071	.1000	.0938	.0833	.0789	.0750	.0625	.0536	.0469
	2	.2000	.1828	.1667	.1429	.1333	.1250	.1111	.1053	.1000	.0833	.0714	.0625
	2-1/2	.2500	.2273	.2083	.1786	.1667	.1563	.1389	.1319	.1250	.1042	.0893	.0781
	3-1/2	.3500	.3182	.2917	.2500	.2333	.2188	.1944	.1842	.1750	.1458	.1250	.1094
	4-1/2	.4500	.4091	.3750	.3214	.3000	.2812	.2500	.2368	.2250	.1875	.1607	.1406
	8	.8000	.7273	.6667	.5714	.5333	.5000	.4444	.4211	.4000	.3333	.2857	.2500

THREAD LENGTH:

Tapping Screws - Standard Head Types: Tapping screws, Types A, B, and BP up to and including eight diameters in length shall be threaded as close to the head as practical. Screw lengths greater than eight diameters in length shall be threaded for a distance not less than six diameters.

Tapping screws, Types C, D, F, and G, up to and including three diameters in length shall be threaded to within one full thread of the head; lengths from three diameters up to and including eight diameters, shall be threaded to within two threads of the head; lengths greater than eight diameters shall be threaded for a distance not less than six diameters.

Tapping Screws - Trim Head Types: Trim head tapping screws, Type A, up to and including No. 12 and 1.00 inch in length shall be threaded as close to the head as practical; screws longer than 1.00 inch shall have a maximum unthreaded shank length of .50 inches. For sizes larger than No. 12, lengths of eight diameters or less shall be threaded as close to the head as practical; lengths greater than eight diameters, shall have a maximum unthreaded shank length of .75 inch.

Trim head tapping screws, Types C, D, F, and G, up to and including three diameters in length shall be threaded to within 1- thread of the head or closer; screws from three diameters up to and including 1.50 inch in length, shall be threaded to within 2 threads of the head or closer; screws over 1.50 inch long shall have a minimum thread length of 1.25 inches.

Drive Screws: Drive screws Type U may have unfinished threads at the starting end of the screw and under the head for a length equal to 1/2 the maximum outside diameter of the screw.

Wood Screws: Wood screws shall have a thread length equal to approximately 2/3 of the length of the screw.

GENERAL SPECIFICATIONS

BODY DIAMETER:

Tapping Screws - Standard Head Types: The diameter of the unthreaded section on Types A, B, and BP tapping screws shall not be greater than the maximum major diameter nor less than the minimum minor diameter of the thread as shown in Table 4.

The diameter of the unthreaded section on Types C, D, F, and G, tapping screws shall not be greater than the maximum major diameter nor less than the Unified and American Class 2A thread minimum pitch diameter as shown in Table 4.

TABLE 4 - BODY DIAMETERS - TAPPING SCREWS

TYPE A POINT								
Screw Size	4	5	6	7	8	10	12	14
Basic Diameter	.112	.125	.138	.151	.164	.190	.216	.242
Threads Per Inch	24	20	18	16	15	12	11	10
Threads Per Inch	24	20	20	19	18	16	14	14
Body Diameter Limits	.114 .078	.130 .090	.141 .096	.158 .108	.168 .116	.194 .126	.221 .155	.254 .178

TYPE B AND BP POINT								
Screw Size	4	5	6	7	8	10	12	1/4
Basic Diameter	.112	.125	.138	.151	.164	.190	.216	.250
Threads Per Inch	24	20	20	19	18	16	14	14
Body Diameter Limits	.114 .082	.130 .090	.139 .099	.154 .109	.166 .116	.189 .135	.215 .157	.246 .185

TYPE C, D, F, AND G POINT											
Screw Size	6	8	10		12	1/4		5/16		3/8	
Basic Diameter	.138	.164	.190		.216	.250		.3125		.375	
Threads Per Inch	32	32	24	32	24	20	28	18	24	16	24
Body Diameter Limits	.1380 .1141	.1640 .1399	.1900 .1586	.1900 .1658	.2160 .1845	.2500 .2127	.2500 .2225	.3125 .2712	.3125 .2806	.3750 .3287	.3750 .3430

Tapping Screws - Trim Head Types: The diameter of the unthreaded body on trim head screws, Type A, for screw sizes up to and including No. 12 and 1.00 inch in length and sizes larger than No. 12 having a length of eight diameters or less shall not be greater than the maximum nor less than the minimum body diameter specified in Table 5. For screw sizes up to and including No. 12 and having lengths greater than 1.00 inch and for sizes larger than No. 12 having a length greater than eight diameters, the full body diameter may extend the whole distance from the head to the thread or a shoulder may be provided with a minimum length of .062 inch under the head. The diameter of the full body or the shoulder shall be within the limits specified in Table 5. The unthreaded shank diameter between the shoulder and the thread shall be within the maximum major diameter and the minimum minor diameter of the thread as shown in Table 5.

GENERAL SPECIFICATIONS

The diameter of the unthreaded body on trim head screws; Types C, D, F, and G, up to and including 1.50 inch length shall not be greater than the maximum nor less than the minimum body diameters specified in Table 5. Lengths over 1.50 inch may be provided with a shoulder having a minimum length of .062 inch under the head. The diameter of the shoulder shall be within the limits specified in Table 5. The remaining unthreaded shank diameter shall be between the maximum major diameter and the Unified and American Class 2A thread minimum pitch diameter as shown in Table 5.

TABLE 5 - BODY OR SHOULDER AND SHANK DIAMETERS - TRIM HEADS ONLY -

TYPE A POINT

Screw Size	Body	4	5	6		8		10	12		14	
	Head	3	4	4	5	5	6	8	8	10	10	12
Threads Per Inch		24	20	18	18	15	15	12	11	11	10	10
Threads Per Inch		24	20	20	20	18	18	16	14	14	14	14
Body or Shoulder Diameter Limits		.116 .105	.129 .118	.142 .131	.142 .131	.168 .157	.168 .157	.194 .183	.220 .209	.220 .209	.246 .235	.246 .235
Unthreaded Shank Diameter Limits		.114 .078	.130 .090	.141 .096	.141 .096	.168 .116	.168 .116	.194 .126	.221 .155	.221 .155	.254 .178	.254 .178

TYPE C, D, F, AND G POINT

Screw Size	Body	6		8		10		12	
	Head	4	5	5	6	8		8	10
Threads Per Inch		32	32	32	32	24	32	24	24
Body or Shoulder Diameter Limits		.138 .131	.138 .131	.164 .157	.164 .157	.190 .181	.190 .181	.216 .207	.216 .207
Unthreaded Shank Diameter Limits		.1380 .1141	.1380 .1141	.1640 .1399	.1640 .1399	.1900 .1586	.1900 .1658	.2160 .1845	.2160 .1845

TYPE C, D, F, AND G POINT (Cont'd)

Screw Size	Body	1/4				5/16				3/8	
	Head	10		12		12		1/4		5/16	
Threads Per Inch		20	28	20	28	18	24	18	24	16	24
Body or Shoulder Diameter Limits		.250 .240	.250 .240	.250 .240	.250 .240	.312 .302	.312 .302	.312 .302	.312 .302	.375 .364	.375 .364
Unthreaded Shank Diameter Limits		.2500 .2127	.2500 .2225	.2500 .2127	.2500 .2225	.3125 .2712	.3125 .2806	.3125 .2712	.3125 .2806	.3750 .3287	.3750 .3430

PERFORMANCE REQUIREMENTS:

Scope: The requirements for performance testing shall apply only to steel tapping screws Types A, B, C, D, F, and G, No. 2 and larger. They shall not apply to screws of stainless steel, brass, or other materials.

Test Plates: The test plates shall be made of low carbon cold rolled steel, Rockwell B 80-107 or equivalent hardness. Test holes shall be drilled and redrilled or reamed to within plus or minus .001 inch of nominal. See Table 6 for plate thicknesses and hole sizes.

Drive Test: The tapping screw shall, without deforming its' own threads, form or cut a mating thread in the test hole of the test plate until the taper thread of the point is completely through the

GENERAL SPECIFICATIONS

test plate. If the screw should fail, additional samples shall be taken from the same lot and subjected to the drive test and the referee test. Acceptance shall be contingent upon passing both tests.

TABLE 6 - HOLE SIZES FOR INSPECTION OF TAPPING SCREWS

Screw Size	Material Thickness Types A, B, & C		TYPE A Hole Size		TYPE B Hole Size		TYPE C Coarse Thd. Hole Size		TYPE C Coarse Thd. Hole Size		Material Thickness Types D, F, & G		TYPE D, F, & G Coarse Thd. Hole Size		TYPE D, F, & G Coarse Thd. Hole Size	
	Gage	Decimal[1]	Drill	Decimal Equiv.	Drill	Decimal Equiv.	Drill	Decimal Equiv.	Drill	Decimal Equiv.	Gage	Decimal[1]	Drill	Decimal Equiv.	Drill	Decimal Equiv.
2	18	.0480	#48	.0760	#48	.0760	#48	.0760	#48	.0760	—	.0780	#49	.0750	—	—
3	18	.0480	#46	.0810	#46	.0810	#44	.0860	#43	.0890	—	.0940	#46	.0810	—	—
4	18	.0480	#44	.0860	#44	.0860	#41	.0960	#40	.0980	—	.1090	#41	.0960	—	—
5	18	.0480	#36	.1065	#36	.1065	#35	.1100	#35	.1100	—	.1090	#37	.1040	—	—
6	14	.0750	#32	.1160	#32	.1160	#31	.1200	1/8	.1250	—	.1405	#31	.1200	—	—
7	14	.0750	#30	.1285	#30	.1285	—	—	—	—	—	—	—	—	—	—
8	14	.0750	#29	.1360	#29	.1360	#27	.1440	#26	.1470	—	.1400	#26	.1470	—	—
10	1/8	.1250	#21	.1590	#21	.1590	#19	.1660	11/64	.1719	3/16	.1875	#17	.1730	#16	.1770
12	1/8	.1250	3/16	.1875	3/16	.1875	#11	.1910	#10	.1935	3/16	.1875	#8	.1990	—	—
14	1/8	.1250	5.5mm	.2165	—	—	—	—	—	—	—	—	—	—	—	—
16	3/16	.1875	B	.2380	—	—	—	—	—	—	—	—	—	—	—	—
18	3/16	.1875	G	.2610	—	—	—	—	—	—	—	—	—	—	—	—
20	3/16	.1875	L	.2900	—	—	—	—	—	—	—	—	—	—	—	—
24	3/16	.1875	11/32	.3438	—	—	—	—	—	—	—	—	—	—	—	—
1/4	3/16	.1875	—	—	5.5mm	.2165	7/32	.2190	I	.2280	1/4	.2500	I	.2280	A	.2340
5/16	3/16	.1875	—	—	I	.2720	J	.2770	L	.2900	5/16	.3125	L	.2900	M	.2950
3/8	3/16	.1875	—	—	21/64	.3281	R	.3390	11/32	.3438	3/8	.3750	T	.3580	T	.3580
7/16	3/16	.1875	—	—	13/32	.4062	—	—	—	—	—	—	—	—	—	—
1/2	3/16	.1875	—	—	15/32	.4688	—	—	—	—	—	—	—	—	—	—

[1]Tolerance ± .002 for thicknesses to and including .160 and ± .003 for thicknesses over .160.

Referee Test: The screw shank shall be clamped by suitable means in a manner such that at least 2 full form threads project above the clamping device, and at least 2 full threads, exclusive of the point are held undamaged within the clamping device. By means of a suitably calibrated torque measuring device, torque shall be applied to the screw until failure occurs. The torque required to cause failure shall be not less than the minimum values shown in Table 7.

HOLE SIZES: For recommended hole sizes for application of Types A, B, C, D, F, and G tapping screws in various types and thicknesses of materials see page D-950.09 through D-950.13.

LIMITS: Allowable variation on dimensions controlling finished surfaces is plus or minus .010 inch unless otherwise specified.

DEFECTS: Screws must be free from brittleness, burrs, loose scale, and all other defects that might affect their serviceability.

GENERAL SPECIFICATIONS

TABLE 7 - MINIMUM TORSIONAL STRENGTH OF TAPPING SCREWS
POUND - INCHES

Screw Size	Type A	Type B & BP	TYPE C, D, F, & G		Screw Size	Type A	Type B & BP	TYPE C, D, F, & G	
			Coarse	Fine				Coarse	Fine
2	3	3	5	6	16	142	—	—	—
3	8	8	8	9	18	183	—	—	—
4	11	12	12	14	20	234	—	—	—
5	17	17	17	19	24	460	—	—	—
6	20	22	21	25	1/4	—	133	132	168
7	28	28	—	—	5/16	—	270	285	347
8	36	36	39	44	3/8	—	550	525	664
10	45	52	52	69					
					7/16	—	—	—	—
12	78	82	87	101	1/2	—	—	—	—
14	117	—	—	—					

The specifications in this section were developed without considering whether patents may or may not be involved. In all cases, therefore, the supplier shall be required to assume patent liability.

FORD MOTOR COMPANY
STANDARD PARTS

APPROXIMATE HOLE SIZES FOR TAPPING SCREWS

TYPE A IN SHEET METAL

Steel, Stainless Steel, Monel Metal, Brass, Aluminum Alloy

Screw Size	Metal Thickness	Pierced or Extruded Hole: Hole Required	Drilled or Clean Punched Hole: Hole Required	Drilled or Clean Punched Hole: Drill Size
4	0.015		0.086	44
	0.018		0.086	44
	0.024	0.098	0.093	42
	0.030	0.098	0.093	42
	0.036	0.098	0.098	40
6	0.015		0.099	39
	0.018		0.099	39
	0.024	0.111	0.099	39
	0.030	0.111	0.101	38
	0.036	0.111	0.106	36
7	0.015		0.104	37
	0.018		0.104	37
	0.024	0.120	0.110	35
	0.030	0.120	0.113	33
	0.036	0.120	0.116	32
	0.048	0.120	0.120	31
8	0.018		0.113	33
	0.024	0.136	0.113	33
	0.030	0.136	0.116	32
	0.036	0.136	0.120	31
	0.048	0.142	0.128	30
10	0.018		0.128	30
	0.024	0.157	0.128	30
	0.030	0.157	0.128	30
	0.036	0.157	0.136	29
	0.048	0.157	0.149	25
12	0.024		0.147	26
	0.030	0.185	0.149	25
	0.036	0.185	0.152	24
	0.048	0.185	0.157	22
14	0.024		0.180	15
	0.030	0.209	0.189	12
	0.036	0.209	0.191	11
	0.048	0.209	0.196	9

TYPE A IN PLYWOOD (Resin Impregnated)

Compreg, Pregwood, Etc.

Screw Size	Hole Required	Drill Size	Minimum* Material Thickness	Penetration in Blind Holes**: Max	Penetration in Blind Holes**: Min
4	0.098	40	3/16	3/4	1/4
6	0.110	35	3/16	3/4	1/4
7	0.128	30	1/4	3/4	5/16
8	0.140	28	1/4	3/4	5/16
10	0.169	18	5/16	1-	3/8
12	0.189	12	5/16	1-	3/8
14	0.228	1	7/16	1-	1/2

TYPE A IN ASBESTOS COMPOSITIONS

Transite, Ebony Asbestos, Etc.

Screw Size	Hole Required	Drill Size	Minimum* Material Thickness	Penetration in Blind Holes**: Max	Penetration in Blind Holes**: Min
4	0.093	42	3/16	3/4	1/4
6	0.106	36	3/16	3/4	1/4
7	0.125	1/8	1/4	3/4	5/16
8	0.136	29	1/4	3/4	5/16
10	0.161	20	5/16	1-	3/8
12	0.185	13	5/16	1-	3/8
14	0.213	3	7/16	1-	1/2

TYPES B AND BP IN SHEET METAL

Screw Size	Metal Thickness	Steel, Stainless Steel, Monel Metal, Brass: Pierced or Extruded Hole: Hole Required	Steel, Stainless Steel, Monel Metal, Brass: Drilled or Clean Punched Hole: Hole Required	Steel, Stainless Steel, Monel Metal, Brass: Drilled or Clean Punched Hole: Drill Size	Aluminum Alloy: Pierced or Extruded Hole: Hole Required	Aluminum Alloy: Drilled or Clean Punched Hole: Hole Required	Aluminum Alloy: Drilled or Clean Punched Hole: Drill Size
2	0.015		0.063	52			
	0.018		0.063	52			
	0.024		0.067	51		0.063	52
	0.030		0.070	50		0.063	52
	0.036		0.073	49		0.063	52
	0.048		0.073	49		0.067	51
	0.060		0.076	48		0.070	50
4	0.015	0.086	0.086	44			
	0.018	0.086	0.086	44			
	0.024	0.098	0.089	43	0.086		
	0.030	0.098	0.093	42	0.086	0.086	44
	0.036	0.098	0.093	42	0.086	0.086	44
	0.048		0.096	41	0.086	0.086	44
	0.060		0.099	39		0.089	43
	0.075		0.101	38		0.089	43
	0.105					0.093	42

TYPES B AND BP IN PLYWOOD (Resin Impregnated)

Compreg, Pregwood, Etc.

Screw Size	Hole Required	Drill Size	Minimum Material Thickness*	Penetration in Blind Holes**: Max	Penetration in Blind Holes**: Min
2	0.073	49	1/8	1/2	3/16
4	0.099	39	3/16	5/8	1/4
6	0.125	1/8	3/16	5/8	1/4
7	0.136	29	3/16	3/4	1/4
8	0.144	27	3/16	3/4	1/4
10	0.173	17	1/4	1-	5/16
12	0.193	10	5/16	1-	3/8
1/4	0.228	1	5/16	1-	3/8

NOTE: Because conditions differ widely, it may be necessary to vary the hole size to suit a particular application. The hole sizes tabulated above represent recommendations based on practical experience of screw producers and users as presented in American Standard ASA B18.6.4 and are not to be misconstrued as being a part of the tapping screw specifications. (The performance requirements are given in the General Specifications, Table 2, for the screws).

*Based on full thread engagement through the entire material, with the tapered portion of the screw projecting completely.

**Total length of thread in engagement.

FORD MOTOR COMPANY
STANDARD PARTS

APPROXIMATE HOLE SIZES FOR TAPPING SCREWS

TYPES B AND BP IN SHEET METAL

Screw Size	Metal Thickness	Steel, Stainless Steel, Monel Metal, Brass: Pierced or Extruded Hole — Hole Required	Steel, Stainless Steel, Monel Metal, Brass: Drilled or Clean Punched Hole — Hole Required	Steel, Stainless Steel, Monel Metal, Brass: Drilled or Clean Punched Hole — Drill Size	Aluminum Alloy: Pierced or Extruded Hole — Hole Required	Aluminum Alloy: Drilled or Clean Punched Hole — Hole Required	Aluminum Alloy: Drilled or Clean Punched Hole — Drill Size
6	0.015	0.111	0.104	37			
	0.018	0.111	0.104	37			
	0.024	0.111	0.106	36	0.111		
	0.030	0.111	0.106	36	0.111	0.104	37
	0.036	0.111	0.110	35	0.111	0.104	37
	0.048		0.111	34	0.111	0.104	37
	0.060		0.116	32		0.106	36
	0.075		0.120	31		0.110	35
	0.105		0.128	30		0.111	34
	0.128 to 0.250					0.120	31
7	0.018	0.120	0.113	33			
	0.024	0.120	0.113	33	0.120		
	0.030	0.120	0.116	32	0.120	0.113	33
	0.036	0.120	0.116	32	0.120	0.113	33
	0.048	0.120	0.120	31	0.120	0.116	32
	0.060		0.128	30		0.120	31
	0.075		0.136	29		0.128	30
	0.105		0.140	28		0.136	29
	0.128 to 0.250					0.136	29
8	0.018	0.136					
	0.024	0.136	0.116	32	0.136		
	0.030	0.136	0.120	31	0.136	0.116	32
	0.036	0.136	0.120	31	0.136	0.120	31
	0.048	0.136	0.128	30	0.136	0.128	30
	0.060		0.136	29		0.136	29
	0.075		0.140	28		0.140	28
	0.105		0.149	25		0.147	26
	0.125		0.149	25		0.147	26
	0.135		0.152	24		0.149	25
	0.162 to 0.375					0.152	24
10	0.018	0.157					
	0.024	0.157	0.144	27	0.157		
	0.030	0.157	0.144	27	0.157		
	0.036	0.157	0.147	26	0.157	0.144	27
	0.048	0.157	0.152	24	0.157	0.144	27
	0.060		0.152	24		0.144	27
	0.075		0.157	22		0.147	26
	0.105		0.161	20		0.147	26
	0.125		0.169	18		0.154	23
	0.135		0.169	18		0.154	23
	0.164		0.173	17		0.159	21
	0.200 to 0.375					0.166	19
12	0.024	0.185	0.166	19			
	0.030	0.185	0.166	19			
	0.036	0.185	0.166	19			
	0.048	0.185	0.169	18		0.161	20
	0.060		0.177	16		0.166	19
	0.075		0.182	14		0.173	17
	0.105		0.185	13		0.180	15
	0.125		0.196	9		0.182	14
	0.135		0.196	9		0.182	14
	0.164		0.201	7		0.189	12
	0.200 to 0.375					0.196	9
1/4	0.030	0.209	0.185	13			
	0.036	0.209	0.185	13			
	0.048	0.209	0.191	11			
	0.060		0.199	8		0.199	8
	0.075		0.204	6		0.201	7
	0.105		0.209	4		0.204	6
	0.125		0.228	1		0.209	4
	0.135		0.228	1		0.209	4
	0.164		0.234	15/64		0.213	3
	0.187		0.234	15/64		0.213	3
	0.194		0.234	15/64		0.221	2
	0.200 to 0.375					0.228	1

TYPES B AND BP IN ASBESTOS COMPOSITIONS

Screw Size	Transite, Ebony Asbestos, Etc.: Hole Required	Drill Size	Minimum* Material Thickness	Penetration in Blind Holes**: Max	Penetration in Blind Holes**: Min
2	0.076	48	1/8	1/2	3/16
4	0.101	38	3/16	5/8	1/4
6	0.120	31	3/16	5/8	1/4
7	0.136	29	1/4	3/4	5/16
8	0.147	26	5/16	3/4	3/8
10	0.166	19	5/16	1-	3/8
12	0.196	9	5/16	1-	3/8
1/4	0.228	1	7/16	1-	1/2

TYPES B AND BP IN CASTINGS

Screw Size	Aluminum, Magnesium, Zinc, Brass, Bronze: Hole Required	Drill Size	Penetration in Blind Holes**: Min
2	0.078	47	1/8
4	0.104	37	3/16
6	0.128	30	1/4
7	0.144	27	1/4
8	0.152	24	1/4
10	0.177	16	1/4
12	0.199	8	9/32
1/4	0.234	15/64	5/16

TYPES B AND BP IN PLASTICS

Screw Size	Phenol Formaldehyde: Hole Required	Phenol Formaldehyde: Drill Size	Cellulose Acetate, Cellulose Nitrate, Acrylic Resin, Styrene Resin: Hole Required	Cellulose Acetate, Cellulose Nitrate, Acrylic Resin, Styrene Resin: Drill Size	Penetration in Blind Holes: Min
2	0.078	47	0.078	47	3/16
4	0.099	39	0.093	42	1/4
6	0.128	30	0.120	31	1/4
7	0.136	29	0.128	30	1/4
8	0.149	25	0.144	27	5/16
10	0.177	16	0.169	18	5/16
12	0.199	8	0.191	11	3/8
1/4	0.234	15/64	0.221	2	3/8

NOTE: Because conditions differ widely, it may be necessary to vary the hole size to suit a particular application. The hole sizes tabulated above represent recommendations based on practical experience of screw producers and users as presented in American Standard ASA B18.6.4 and are not to be misconstrued as being a part of the tapping screw specifications. (The performance requirements are given in the General Specifications, Table 2, for the screws).

*Based on full thread engagement through the entire material with the tapered portion of the screw projecting completely.

**Total length of thread in engagement.

FORD MOTOR COMPANY
STANDARD PARTS

APPROXIMATE HOLE SIZES FOR TAPPING SCREWS

TYPE C IN SHEET METAL				
			Steel	
Screw Size	Threads per Inch	Metal Thickness	Hole Required	Drill Size
4	40	0.037	0.093	42
		0.048	0.093	42
		0.062	0.096	41
		0.075	0.100	39
		0.105	0.101	38
		0.134	0.101	38
6	32	0.037	0.113	33
		0.048	0.116	32
		0.062	0.116	32
		0.075	0.122	3.1 MM
		0.105	0.125	1/8
		0.134	0.125	1/8
8	32	0.037	0.136	29
		0.048	0.144	27
		0.062	0.144	27
		0.075	0.147	26
		0.105	0.150	25
		0.134	0.150	25
10	24	0.037	0.154	23
		0.048	0.161	20
		0.062	0.166	19
		0.075	0.170	18
		0.105	0.173	17
		0.134	0.177	16
	32	0.037	0.170	18
		0.048	0.170	18
		0.062	0.170	18
		0.075	0.173	17
		0.105	0.177	16
		0.134	0.177	16

TYPE C IN SHEET METAL				
			Steel	
Screw Size	Threads per Inch	Metal Thickness	Hole Required	Drill Size
12	24	0.037	0.189	12
		0.048	0.194	10
		0.062	0.194	10
		0.075	0.199	8
		0.105	0.199	8
		0.134	0.199	8
1/4	20	0.037	0.221	2
		0.048	0.221	2
		0.062	0.228	1
		0.075	0.234	A
		0.105	0.234	A
		0.134	0.236	6 MM
	28	0.037	0.224	5.7 MM
		0.048	0.228	1
		0.062	0.232	5.9 MM
		0.075	0.234	A
		0.105	0.238	B
		0.134	0.238	B
5/16	18	0.037	0.290	L
		0.048	0.290	L
		0.062	0.290	L
		0.075	0.295	M
		0.105	0.295	M
		0.134	0.295	M

			TYPES D, F, AND G IN SHEET METAL				TYPES D, F, AND G IN CASTINGS			
			Steel		Aluminum		Iron		Zinc and Aluminum	
Screw Size	Threads per Inch	Metal Thickness	Hole Required	Drill Size	Hole Required	Drill Size	Hole Required	Drill Size	Hole Required	Drill Size
2	56	0.050	0.0730	49	0.0700	50	0.0760	48	0.0730	49
		0.060	0.0730	49	0.0730	49	0.0760	48	0.0730	49
		0.083	0.0730	49	0.0730	49	0.0760	48	0.0760	48
		0.109	0.0730	49	0.0730	49	0.0781	5/64	0.0760	48
		0.125	0.0760	48	0.0730	49	0.0781	5/64	0.0760	48
		0.140	0.0760	48	0.0730	49	0.0781	5/64	0.0760	48
3	48	0.050	0.0810	46	0.0781	5/64	0.0890	43	0.0820	45
		0.060	0.0810	46	0.0810	46	0.0890	43	0.0820	45
		0.083	0.0860	44	0.0820	45	0.0890	43	0.0820	45
		0.109	0.0860	44	0.0820	45	0.0890	43	0.0860	44
		0.125	0.0860	44	0.0820	45	0.0890	43	0.0890	43
		0.140	0.0860	44	0.0860	44	0.0935	42	0.0890	43
		0.187	0.0890	43	0.0860	44	0.0935	42	0.0890	43
4	40	0.050	0.0890	43	0.0890	43	0.0995	39	0.0960	41
		0.060	0.0890	43	0.0890	43	0.0995	39	0.0960	41
		0.083	0.0935	42	0.0890	43	0.1015	38	0.0960	41
		0.109	0.0960	41	0.0935	42	0.1015	38	0.0960	41
		0.125	0.0980	40	0.0935	42	0.1015	38	0.0995	39
		0.140	0.0980	40	0.0938		0.1015	38	0.0995	39
		0.187	0.1015	38	0.0980	40	0.1040	37	0.0995	39
5	40	0.050	0.1060		0.1015	38	0.1110	34	0.1060	
		0.060	0.1060		0.1015	38	0.1110	34	0.1060	
		0.083	0.1060		0.1040	37	0.1130	33	0.1060	
		0.109	0.1065	36	0.1040	37	0.1130	33	0.1100	35
		0.125	0.1094		0.1065	36	0.1160	32	0.1100	35
		0.140	0.1100	35	0.1065	36	0.1160	32	0.1100	35
		0.187	0.1160	32	0.1100	35	0.1160	32	0.1110	34
		0.250	0.1160	32	0.1130	33	0.1160	32	0.1130	33
6	32	0.050	0.1100	35	0.1094		0.1200	31	0.1160	32
		0.060	0.1130	33	0.1094		0.1200	31	0.1200	31
		0.083	0.1160	32	0.1110	34	0.1250	1/8	0.1200	31
		0.109	0.1160	32	0.1130	33	0.1250	1/8	0.1200	31
		0.125	0.1160	32	0.1160	32	0.1250	1/8	0.1200	31
		0.140	0.1200	31	0.1160	32	0.1250	1/8	0.1200	31
		0.187	0.1250	1/8	0.1200	31	0.1285	30	0.1200	31
		0.250	0.1250	1/8	0.1250	1/8	0.1285	30	0.1200	31
8	32	0.050	0.1360	29	0.1360	29	0.1470	26	0.1440	27
		0.060	0.1405	28	0.1360	29	0.1495	25	0.1440	27
		0.083	0.1405	28	0.1360	29	0.1495	25	0.1440	27
		0.109	0.1440	27	0.1405	28	0.1495	25	0.1440	27
		0.125	0.1440	27	0.1405	28	0.1495	25	0.1470	26
		0.140	0.1470	26	0.1440	27	0.1495	25	0.1470	26
		0.187	0.1495	25	0.1470	26	0.1540	23	0.1470	26
		0.250	0.1495	25	0.1495	25	0.1540	23	0.1495	25
		0.312	0.1495	25	0.1495	25	0.1540	23	0.1495	25

NOTE: Because conditions differ widely, it may be necessary to vary the hole size to suit a particular application. The hole sizes tabulated above represent recommendations based on practical experience of screw producers and users as presented in American Standard ASA B18.6.4 and are not to be misconstrued as being a part of the tapping screw specifications. (The performance requirements are given in the General Specifications, Table 2, for the screws).

FORD MOTOR COMPANY
STANDARD PARTS

APPROXIMATE HOLE SIZES FOR TAPPING SCREWS

Screw Size	Threads per Inch	Metal Thickness	TYPES D, F, AND G IN SHEET METAL				TYPES D, F, AND G IN CASTINGS			
			Steel		Aluminum		Iron		Zinc and Aluminum	
			Hole Required	Drill Size	Hole Required	Drill Size	Hole Required	Drill Size	Hole Required	Drill Size
10	24	0.050	0.1520	24	0.1495	25	0.1695	18	0.1610	20
		0.060	0.1540	23	0.1520	24	0.1695	18	0.1660	19
		0.083	0.1610	20	0.1540	23	0.1719		0.1660	19
		0.109	0.1610	20	0.1570	22	0.1730	17	0.1660	19
		0.125	0.1660	19	0.1590	21	0.1730	17	0.1660	19
		0.140	0.1695	18	0.1610	20	0.1730	17	0.1660	19
		0.187	0.1730	17	0.1660	19	0.1770	16	0.1695	18
		0.250	0.1730	17	0.1719		0.1770	16	0.1695	18
		0.312	0.1730	17	0.1730	17	0.1770	16	0.1719	
		0.375	0.1730	17	0.1730	17	0.1770	16	0.1719	
	32	0.050	0.1590	21	0.1610	20	0.1730	17	0.1695	18
		0.060	0.1660	19	0.1610	20	0.1730	17	0.1695	18
		0.083	0.1660	19	0.1610	20	0.1770	16	0.1719	
		0.109	0.1695	18	0.1660	19	0.1770	16	0.1719	
		0.125	0.1695	18	0.1660	19	0.1770	16	0.1719	
		0.140	0.1695	18	0.1660	19	0.1770	16	0.1719	
		0.187	0.1770	16	0.1719		0.1800	15	0.1719	
		0.250	0.1770	16	0.1770	16	0.1800	15	0.1730	17
		0.312	0.1770	16	0.1770	16	0.1800	15	0.1730	17
		0.375	0.1770	16	0.1770	16	0.1800	15	0.1770	16
12	24	0.060	0.1800	15	0.1770	16	0.1960	9	0.1890	12
		0.083	0.1820	14	0.1800	15	0.1990	8	0.1910	11
		0.109	0.1875	3/16	0.1820	14	0.1990	8	0.1910	11
		0.125	0.1910	11	0.1850	13	0.1990	8	0.1910	11
		0.140	0.1910	11	0.1875	3/16	0.1990	8	0.1935	10
		0.187	0.1990	8	0.1910	11	0.2031	13/64	0.1935	10
		0.250	0.1990	8	0.1990	8	0.2040	6	0.1960	9
		0.312	0.1990	8	0.1990	8	0.2040	6	0.1960	9
		0.375	0.1990	8	0.1990	8	0.2040	6	0.1990	8
		0.500	0.1990	8	0.1990	8	0.2040	6	0.1990	8
1/4	20	0.083	0.2130	3	0.2055	5	0.2280	1	0.2188	
		0.109	0.2188		0.2090	4	0.2280	1	0.2188	
		0.125	0.2210	2	0.2130	3	0.2280	1	0.2210	2
		0.140	0.2210	2	0.2130	3	0.2280	1	0.2210	2
		0.187	0.2280	1	0.2210	2	0.2344		0.2210	2
		0.250	0.2280	1	0.2280	1	0.2344		0.2280	1
		0.312	0.2280	1	0.2280	1	0.2344		0.2280	1
		0.375	0.2280	1	0.2280	1	0.2344		0.2280	1
		0.500	0.2800	1	0.2280	1	0.2344		0.2280	1
	28	0.083	0.2210	2	0.2188		0.2340	A	0.2280	1
		0.109	0.2280	1	0.2210	2	0.2344		0.2280	1
		0.125	0.2280	1	0.2210	2	0.2344		0.2280	1
		0.140	0.2340	A	0.2210	2	0.2344		0.2280	1
		0.187	0.2344		0.2280	1	0.2380	B	0.2280	1
		0.250	0.2344		0.2344		0.2380	B	0.2340	A
		0.312	0.2344		0.2344		0.2380	B	0.2340	A
		0.375	0.2344		0.2344		0.2380	B	0.2344	
		0.500	0.2344		0.2344		0.2380	B	0.2344	
5/16	18	0.109	0.2770	J	0.2660	H	0.2900	L	0.2770	J
		0.125	0.2770	J	0.2720	I	0.2900	L	0.2810	K
		0.140	0.2813		0.2720	I	0.2900	L	0.2810	K
		0.187	0.2900	L	0.2810	K	0.2950	M	0.2812	9/32
		0.250	0.2900	L	0.2900	L	0.2950	M	0.2812	9/32
		0.312	0.2900	L	0.2900	L	0.2950	M	0.2900	L
		0.375	0.2900	L	0.2900	L	0.2950	M	0.2900	L
		0.500	0.2900	L	0.2900	L	0.2950	M	0.2900	L
	24	0.109	0.2900	L	0.2810	K	0.2950	M	0.2900	L
		0.125	0.2900	L	0.2812	9/32	0.2950	M	0.2900	L
		0.140	0.2900	L	0.2812	9/32	0.2950	M	0.2900	L
		0.187	0.2950	M	0.2900	L	0.3020	N	0.2900	L
		0.250	0.2950	M	0.2950	M	0.3020	N	0.2900	L
		0.312	0.2950	M	0.2950	M	0.3020	N	0.2950	M
		0.375	0.2950	M	0.2950	M	0.3020	N	0.2950	M
		0.500	0.2950	M	0.2950	M	0.3020	N	0.2950	M
3/8	16	0.125	0.3390	R	0.3281	21/64	0.3480	S	0.3390	R
		0.140	0.3390	R	0.3320	Q	0.3480	S	0.3390	R
		0.187	0.3480	S	0.3390	R	0.3480	S	0.3390	R
		0.250	0.3580	T	0.3480	S	0.3480	S	0.3438	
		0.312	0.3580	T	0.3480	S	0.3480	S	0.3438	
		0.375	0.3580	T	0.3480	S	0.3480	S	0.3480	S
		0.500	0.3580	T	0.3480	S	0.3480	S	0.3480	S
	24	0.125	0.3480	S	0.3438		0.3580	T	0.3480	S
		0.140	0.3480	S	0.3438		0.3580	T	0.3480	S
		0.187	0.3580	T	0.3480	S	0.3580	T	0.3480	S
		0.250	0.3580	T	0.3580	T	0.3580	T	0.3580	T
		0.312	0.3580	T	0.3580	T	0.3580	T	0.3580	T
		0.375	0.3580	T	0.3580	T	0.3580	T	0.3580	T
		0.500	0.3580	T	0.3580	T	0.3580	T	0.3580	T

NOTE: Because conditions differ widely, it may be necessary to vary the hole size to suit a particular application. The hole sizes tabulated above represent recommendations based on practical experience of screw producers and users as presented in American Standard ASA B18.6.4 and are not to be misconstrued as being a part of the tapping screw specifications. (The performance requirements are given in the General Specifications, Table 2, for the screws).

APPROXIMATE HOLE SIZES FOR TAPPING SCREWS

TYPES D, F, AND G IN PLASTICS									
		Phenol Formaldehyde				Cellulose Acetate, Cellulose Nitrate, Acrylic Resins, Styrene Resins			
				Depth of Penetration**				Depth of Penetration**	
Screw Size	Threads per Inch	Hole Required	Drill Size	Max	Min	Hole Required	Drill Size	Max	Min
2	56	0.0781	5/64	3/8	7/32	0.076	48	3/8	7/32
3	48	0.089	43	3/8	7/32	0.086	44	3/8	7/32
4	40	0.098	40	5/16	1/4	0.093	42	5/16	1/4
5	40	0.113	33	7/16	1/4	0.110	35	7/16	1/4
6	32	0.116	32	5/16	1/4	0.116	32	5/16	1/4
8	32	0.144	27	1/2	5/16	0.144	27	1/2	5/16
10	24	0.166	19	1/2	3/8	0.166	19	1/2	3/8
	32	0.161	20	1/2	3/8	0.161	20	1/2	3/8
1/4	20	0.228	1	5/8	3/8	0.228	1	1-	3/8

NOTE: Because conditions differ widely, it may be necessary to vary the hole size to suit a particular application. The hole sizes tabulated above represent recommendations based on practical experience of screw producers and users as presented in American Standard ASA B18.6.4 and are not to be misconstrued as being a part of the tapping screw specifications. (The performance requirements are given in the General Specifications, Table 2, for the screws).

**Total length of thread in engagement.

APPROXIMATE HOLE SIZES FOR WOOD SCREWS

Screw Size	Soft Wood		Hard Wood		Screw Size	Soft Wood		Hard Wood	
	Hole Required	Drill Size	Hole Required	Drill Size		Hole Required	Drill Size	Hole Required	Drill Size
3	.0595	53	.073	49	9	.1065	36	.1285	30
4	.067	51	.082	45	10	.116	32	.1405	28
5	.073	49	.089	43	12	.1285	30	.161	20
6	.082	45	.1015	38	14	.147	26	.182	14
7	.0935	42	.113	33	16	.161	20	.201	7
8	.098	40	.120	31					

FORD MOTOR COMPANY
STANDARD PARTS

SECTION E

NUTS

FORD MOTOR COMPANY
STANDARD PARTS

HEXAGON THICK NUTS — CLASS 2B

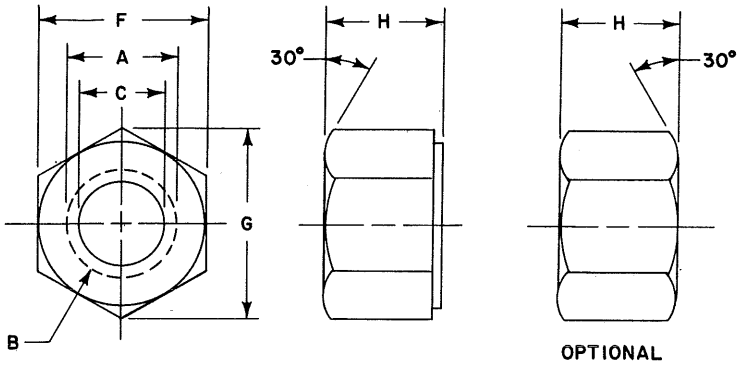

	Nominal Size	1/4	5/16	3/8	7/16	1/2	9/16	5/8
B	Threads per Inch	28	24	24	20	20	18	18
A	Major Dia. Thread - Min.	.2500	.3125	.3750	.4375	.5000	.5625	.6250
C	Minor Diameter Thread	.220 .211	.277 .267	.340 .330	.395 .383	.457 .446	.515 .502	.578 .565
	Pitch Diameter	.2311 .2268	.2902 .2854	.3528 .3479	.4104 .4050	.4731 .4675	.5323 .5264	.5949 .5889
F	Across Flats	.4375 .428	.5000 .489	.5625 .5510	.6875 .675	.7500 .736	.8750 .861	.9375 .922
G	Across Corners	.505 .488	.577 .557	.650 .628	.794 .768	.866 .840	1.010 .982	1.083 1.051
H	Thickness	.288 .274	.336 .320	.415 .398	.463 .444	.573 .552	.621 .598	.731 .706
	Ford Part Number	33878-S	33879-S	33880-S	34682-S	33882-S	33883-S	33884-S

	Nominal Size	3/4	7/8	1	1 1/8	1 1/4	1 1/2
B	Threads per Inch	16	14	12	12	12	12
A	Major Dia. Thread - Min.	.7500	.8750	1.0000	1.1250	1.2500	1.5000
C	Minor Diameter Thread	.696 .682	.814 .798	.928 .910	1.053 1.035	1.178 1.160	1.428 1.410
	Pitch Diameter	.7159 .7094	.8356 .8286	.9535 .9459	1.0787 1.0709	1.2039 1.1959	1.4542 1.4459
F	Across Flats	1.1250 1.088	1.3125 1.269	1.5000 1.450	1.6875 1.631	1.8750 1.812	2.2500 2.175
G	Across Corners	1.299 1.240	1.516 1.447	1.732 1.653	1.949 1.859	2.165 2.066	2.598 2.480
H	Thickness	.827 .798	.922 .890	1.018 .982	1.176 1.136	1.272 1.228	1.526 1.474
	Ford Part Numbers	34683-S	34684-S	34685-S	34686-S	34687-S	34688-S

NOTES: For General Specifications See Page E-950.01. For Finishes See Addendum.
MATERIAL: SAE 1010 (M-2K2-C) Steel.

FORD MOTOR COMPANY
STANDARD PARTS

HEXAGON JAM NUTS — CLASS 2B

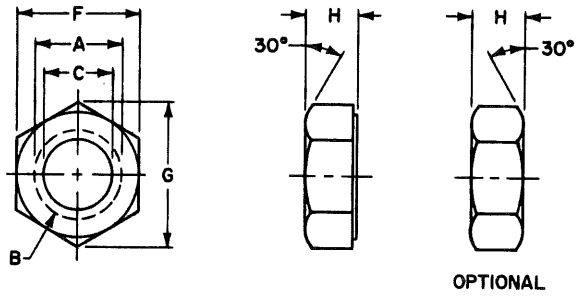

	Nominal Size	1/4		5/16		3/8		7/16		1/2		9/16	
B	Threads per Inch	20	28	18	24	16	24	14	20	13	20	12	18
A	Major Dia. Thread - Min.	.2500		.3125		.3750		.4375		.5000		.5625	
C	Minor Dia. Thread	.207 .196	.220 .211	.265 .252	.277 .267	.321 .307	.340 .330	.376 .360	.395 .383	.434 .417	.457 .446	.490 .472	.515 .502
	Pitch Diameter	.2223 .2175	.2311 .2268	.2817 .2764	.2902 .2854	.3401 .3344	.3528 .3479	.3972 .3911	.4104 .4050	.4565 .4500	.4731 .4675	.5152 .5084	.5323 .5264
F	Across Flats	.4375 .428		.5000 .489		.5625 .551		.6875 .675		.7500 .736		.8750 .861	
G	Across Corners	.505 .488		.577 .557		.650 .628		.794 .768		.866 .840		1.010 .982	
H	Thickness	.163 .150		.195 .180		.227 .210		.260 .240		.323 .302		.324 .301	
	Ford Part Numbers	33920-S	33921-S	33922-S	33923-S	33924-S	33925-S	34689-S	34690-S	33942-S	33943-S	33944-S	33945-S

	Nominal Size	5/8		3/4		7/8		1		1 1/8	
B	Threads per Inch	11	18	10	16	9	14	8	12	7	12
A	Major Dia. Thread - Min.	.6250		.7500		.8750		1.0000		1.1250	
C	Minor Dia. Thread	.546 .527	.578 .565	.662 .642	.696 .682	.778 .755	.814 .798	.890 .865	.928 .910	.998 .978	1.053 1.035
	Pitch Diameter	.5732 .5660	.5949 .5889	.6927 .6850	.7159 .7094	.8110 .8028	.8356 .8286	.9276 .9188	.9535 .9459	1.0416 1.0322	1.0787 1.0709
F	Across Flats	.9375 .922		1.1250 1.088		1.3125 1.269		1.5000 1.450		1.6875 1.631	
G	Across Corner	1.083 1.051		1.299 1.240		1.516 1.447		1.732 1.653		1.949 1.859	
H	Thickness	.387 .363		.446 .398		.510 .458		.575 .519		.639 .579	
	Ford Part Numbers	33946-S	33947-S	34691-S	34692-S	34693-S	34694-S	34695-S	34696-S	34697-S	34698-S

NOTES: For General Specifications See Page E-950.01. For Finishes See Addendum.
MATERIAL: SAE 1010 (M-2K2-C) Steel.

FORD MOTOR COMPANY
STANDARD PARTS

HEXAGON MACHINE SCREW NUTS — **CLASS 2B**

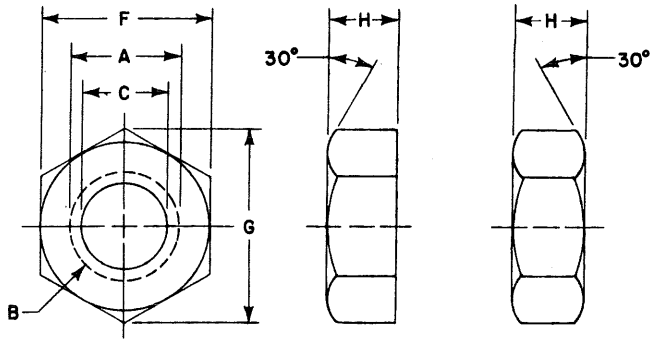

OPTIONAL

	Nominal Size	4		6		8		10	
B	Threads per Inch	40	48	32	40	32	36	24	32
A	Major Dia. Thread - Min.	.1120		.1380		.1640		.1900	
C	Minor Dia. Thread	.0939 .0849	.0968 .0894	.114 .104	.119 .111	.139 .130	.142 .134	.156 .145	.164 .156
	Pitch Diameter	.0991 .0958	.1016 .0985	.1214 .1177	.1252 .1218	.1475 .1437	.1496 .1460	.1672 .1629	.1736 .1697
F	Across Flats	.2500 .241		.3125 .302		.3438 .332		.3750 .362	
G	Across Corners	.289 .275		.361 .344		.397 .378		.433 .413	
H	Thickness	.098 .087		.114 .102		.130 .117		.130 .117	
	Ford Part Numbers When Made from Steel	34050-S	34076-S	34051-S	34077-S	34052-S	34078-S	34053-S	34079-S
	Ford Part Numbers When Made from Brass	34063-S		34064-S		34065-S		34066-S	

	Nominal Size	12		1/4		5/16		3/8	
B	Threads per Inch	24	28	20	28	18	24	16	24
A	Major Dia. Thread - Min.	.2160		.2500		.3125		.3750	
C	Minor Dia. Thread	.181 .171	.186 .177	.207 .196	.220 .211	.265 .252	.277 .267	.321 .307	.340 .330
	Pitch Diameter	.1933 .1889	.1970 .1928	.2223 .2175	.2311 .2268	.2817 .2764	.2902 .2854	.3401 .3344	.3528 .3479
F	Across Flats	.4375 .423		.4375 .423		.5625 .545		.6250 .607	
G	Across Corners	.505 .482		.505 .482		.650 .621		.722 .692	
H	Thickness	.161 .148		.193 .178		.225 .208		.257 .239	
	Ford Part Numbers When Made from Steel	34054-S	34080-S	34055-S	34081-S	34056-S	34082-S	34057-S	34083-S
	Ford Part Numbers When Made from Brass	34067-S		34068-S		34069-S		34070-S	

NOTES: For General Specifications See Page E-950.01. For Finishes See Addendum.
MATERIAL: SAE 1010 (M-2K2-C) Steel.
M-2K1 Brass

FORD MOTOR COMPANY
STANDARD PARTS

HEXAGON SLOTTED NUTS — CLASS 2B

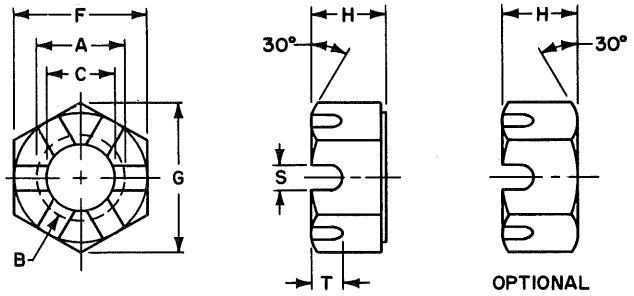

	Nominal Size	1/4		5/16		3/8		7/16	
B	Threads per Inch	20	28	18	24	16	24	14	20
A	Major Diameter Thread - Min	.2500		.3125		.3750		.4375	
C	Minor Diameter Threads	.207 .196	.220 .211	.265 .252	.277 .267	.321 .307	.340 .330	.376 .360	.395 .383
	Pitch Diameter	.2223 .2175	.2311 .2268	.2817 .2764	.2902 .2854	.3401 .3344	.3528 .3479	.3972 .3911	.4104 .4050
F	Across Flats	.4375 .428		.500 .489		.5625 .551		.6875 .675	
G	Across Corners	.505 .488		.577 .557		.650 .628		.794 .768	
H	Thickness	.226 .212		.273 .258		.337 .320		.385 .365	
S	Slot Width	.078		.094		.125		.125	
T	Slot Depth	.094		.094		.125		.156	
	Ford Part Numbers	33974-S	33975-S	33976-S	33977-S	33978-S	33979-S	34699-S	45300-S

	Nominal Size	1/2		9/16		5/8	
B	Threads per Inch	13	20	12	18	11	18
A	Major Dia. Thread - Min.	.5000		.5625		.6250	
C	Minor Diameter Threads	.434 .417	.457 .446	.490 .472	.515 .502	.546 .527	.578 .565
	Pitch Diameter	.4565 .4500	.4731 .4675	.5152 .5084	.5323 .5264	.5732 .5660	.5949 .5889
F	Across Flats	.7500 .736		.8750 .861		.9375 .922	
G	Across Corners	.866 .840		1.010 .982		1.083 1.051	
H	Thickness	.448 .427		.496 .473		.559 .535	
S	Slot Width	.156		.156		.188	
T	Slot Depth	.156		.188		.219	
	Ford Part Numbers	33982-S	33983-S	33984-S	33985-S	33986-S	33987-S

NOTES: For General Specifications See Page E-950.01. For Finishes See Addendum.
MATERIAL: SAE 1010 (M-2K2-C) Steel.
Slots may have square or rounded bottoms.

FORD MOTOR COMPANY
STANDARD PARTS

HEXAGON SLOTTED NUTS — CLASS 2B

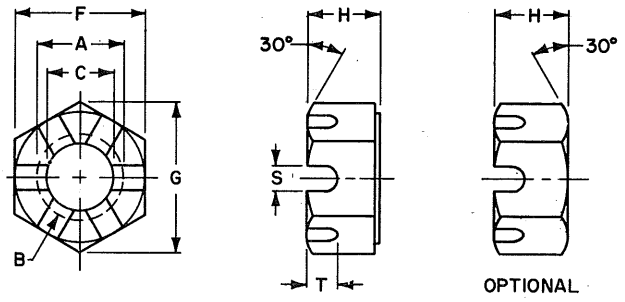

	Nominal Size	3/4		7/8		1	
B	Threads per Inch	10	16	9	14	8	12
A	Major Dia. Thread - Min.	.7500		.8750		1.0000	
C	Minor Diameter Thread	.663 .642	.696 .682	.778 .755	.814 .798	.890 .865	.928 .910
	Pitch Diameter	.6927 .6850	.7159 .7094	.8110 .8028	.8356 .8286	.9276 .9188	.9535 .9459
F	Across Flats	1.1250 1.088		1.3125 1.269		1.5000 1.450	
G	Across Corners	1.299 1.240		1.516 1.447		1.732 1.653	
H	Thickness	.665 .617		.776 .724		.887 .831	
S	Slot Width	.188		.188		.250	
T	Slot Depth	.250		.250		.281	
	Ford Part Numbers	45301-S	45302-S	45303-S	45304-S	45305-S	45306-S

	Nominal Size	1 1/8		1 1/4		1 1/2	
B	Threads per Inch	7	12	7	12	6	12
A	Major Dia. Thread - Min.	1.1250		1.2500		1.5000	
C	Minor Diameter Thread	.998 .970	1.053 1.035	1.123 1.095	1.178 1.160	1.350 1.320	1.428 1.410
	Pitch Diameter	1.0416 1.0322	1.0787 1.0709	1.1668 1.1572	1.2039 1.1959	1.4022 1.3917	1.4542 1.4459
F	Across Flats	1.6875 1.631		1.8750 1.812		2.2500 2.175	
G	Across Corners	1.949 1.859		2.165 2.066		2.598 2.480	
H	Thickness	.999 .939		1.094 1.030		1.317 1.245	
S	Slot Width	.250		.312		.375	
T	Slot Depth	.344		.375		.438	
	Ford Part Numbers	45307-S	45308-S	45309-S	45310-S	45311-S	45312-S

NOTES: For General Specifications See Page E-950.01. For Finishes See Addendum.
MATERIAL: SAE 1010 (M-2K2-C) Steel
Slots may have square or rounded bottoms.

FORD MOTOR COMPANY
STANDARD PARTS

HEXAGON CASTLE & SLOTTED NUTS — CLASS 2B

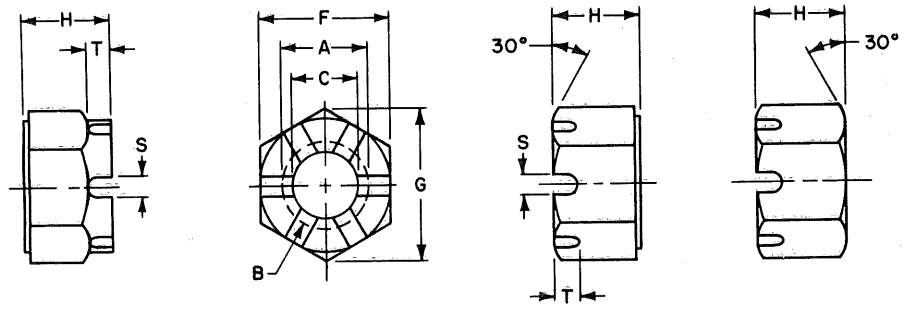

	Nominal Size	1/4	5/16	3/8	7/16	1/2	9/16	5/8
B	Threads per Inch	28	24	24	20	20	18	18
A	Major Dia. Thread - Min.	.2500	.3125	.3750	.4375	.5000	.5625	.6250
C	Minor Diameter Thread	.220 .211	.277 .267	.340 .330	.395 .383	.457 .446	.515 .502	.578 .565
	Pitch Diameter	.2311 .2268	.2902 .2854	.3528 .3479	.4104 .4050	.4731 .4675	.5323 .5264	.5949 .5889
F	Across Flats	.4375 .428	.5000 .489	.5625 .551	.6875 .675	.7500 .736	.8750 .861	.9375 .922
G	Across Corners	.505 .488	.577 .557	.650 .628	.794 .768	.866 .840	1.010 .982	1.083 1.051
H	Thickness	.288 .274	.336 .320	.415 .398	.463 .444	.573 .552	.621 .598	.731 .706
S	Slot Width	.078	.094	.125	.125	.156	.156	.188
T	Slot Depth	.094	.094	.125	.156	.156	.188	.219
	Ford Part Numbers	34028-S	34029-S	34030-S	45313-S	34032-S	34033-S	34034-S

	Nominal Size	3/4	7/8	1	1 1/8	1 1/4	1 1/2
B	Threads per Inch	16	14	12	12	12	12
A	Major Dia. Thread - Min.	.7500	.8750	1.000	1.125	1.250	1.500
C	Minor Diameter Thread	.696 .682	.814 .798	.928 .910	1.053 1.035	1.178 1.160	1.428 1.410
	Pitch Diameter	.7159 .7094	.8356 .8286	.9535 .9459	1.0787 1.0709	1.2039 1.1959	1.4542 1.4459
F	Across Flats	1.1250 1.088	1.3125 1.269	1.5000 1.450	1.6875 1.631	1.8750 1.812	2.2500 2.175
G	Across Corners	1.299 1.240	1.516 1.447	1.732 1.653	1.949 1.859	2.165 2.066	2.598 2.480
H	Thickness	.827 .798	.922 .890	1.018 .982	1.176 1.136	1.272 1.228	1.526 1.474
S	Slot Width	.188	.188	.250	.250	.312	.375
T	Slot Depth	.250	.250	.281	.344	.375	.438
	Ford Part Numbers	45314-S	45315-S	45316-S	45317-S	45318-S	45319-S

NOTES: For General Specifications See Page E-950.01. For Finishes See Addendum.
MATERIAL: SAE 1010 (M-2K2-C) Steel.
Slots May Have Square or Rounded Bottoms.

FORD MOTOR COMPANY
STANDARD PARTS

HEXAGON LOCK NUTS-STYLE I

FREE RUNNING TYPE
CLASS 2B

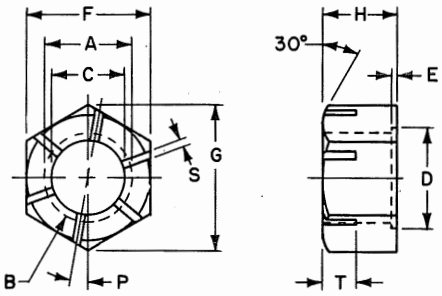

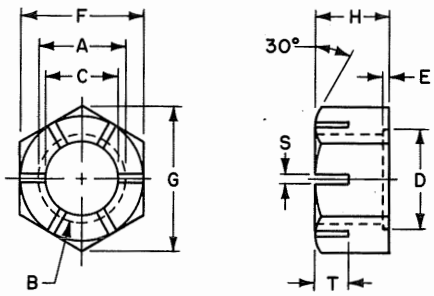

OPTIONAL

	Nominal Size	1/4		5/16		3/8		7/16		1/2	
B	Threads per Inch	20	28	18	24	16	24	14	20	13	20
A	Major Dia. Thread - Min.	.2500		.3125		.3750		.4375		.5000	
C	Minor Dia. Thread	.207 .196	.220 .211	.265 .252	.277 .267	.321 .307	.340 .330	.376 .360	.395 .383	.434 .417	.457 .446
	Pitch Diameter	.2223 .2175	.2311 .2268	.2817 .2764	.2902 .2854	.3401 .3344	.3528 .3479	.3972 .3911	.4104 .4050	.4565 .4500	.4731 .4675
F	Across Flats	.4375 .428		.5000 .489		.5625 .551		.6875 .675		.7500 .736	
G	Across Corners	.505 .488		.577 .557		.650 .628		.794 .768		.866 .840	
H	Thickness	.226 .212		.273 .258		.337 .320		.385 .365		.448 .427	
D	Recess Diameter	.38		.41		.47		.52		.62	
E	Recess Depth	.006 .016		.008 .018		.011 .021		.014 .024		.017 .027	
S	Slot Width	.031		.031		.047		.047		.047	
T	Slot Depth	.109		.125		.156		.172		.203	
P	Angle	10°		10°		10°		10°		10°	
	Ford Part Number	34365-S	34366-S	34367-S	34368-S	34369-S	34370-S	34371-S	34372-S	34373-S	34374-S

	Nominal Size	9/16		5/8		3/4		7/8		1	
B	Threads per Inch	12	18	11	18	10	16	9	14	8	12
A	Major Dia. Thread - Min.	.5625		.6250		.7500		.8750		1.000	
C	Minor Dia. Thread	.490 .472	.515 .502	.546 .527	.578 .565	.663 .642	.696 .682	.778 .755	.814 .798	.890 .865	.928 .910
	Pitch Diameter	.5152 .5084	.5323 .5264	.5732 .5660	.5949 .5889	.6927 .6850	.7159 .7094	.8110 .8028	.8356 .8286	.9276 .9188	.9535 .9459
F	Across Flats	.8750 .861		.9375 .922		1.1250 1.088		1.3125 1.269		1.5000 1.450	
G	Across Corners	1.010 .982		1.083 1.051		1.299 1.240		1.516 1.447		1.732 1.653	
H	Thickness	.496 .473		.559 .535		.665 .617		.776 .724		.887 .831	
D	Recess Diameter	.75		.80		1.00		1.17		1.33	
E	Recess Depth	.019 .029		.022 .032		.027 .037		.032 .042		.038 .048	
S	Slot Width	.047		.047		.062		.062		.062	
T	Slot Depth	.234		.266		.297		.359		.406	
P	Angle	8°		8°		8°		8°		7°	
	Ford Part Numbers	34375-S	34376-S	34377-S	34378-S	34379-S	34380-S	34381-S	34382-S	34383-S	34384-S

NOTES: For General Specifications See Page E-950.01. For Finishes See Addendum.
MATERIAL: SAE 1010 (M-2K2-C) Steel.

FORD MOTOR COMPANY
STANDARD PARTS

HEXAGON LOCK NUTS-STYLE 2

FREE RUNNING TYPE
CLASS 2B

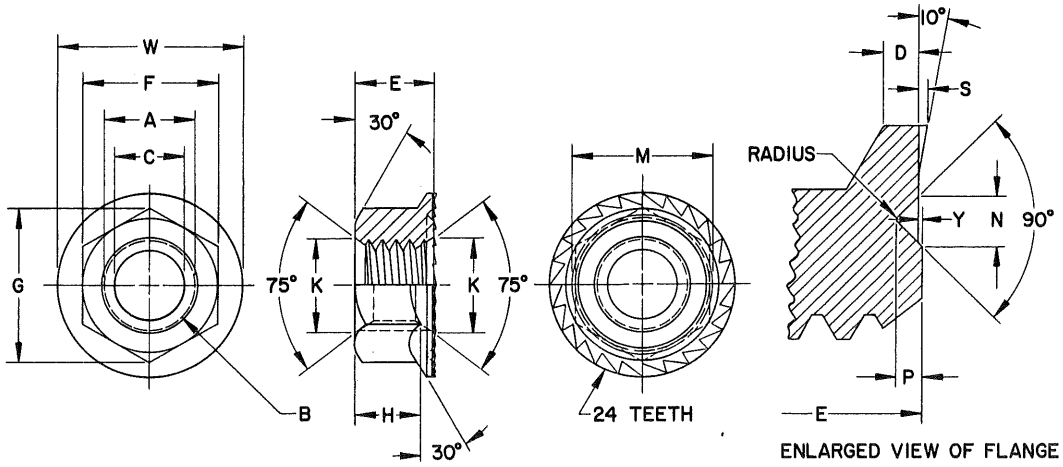

	Nominal Size	6	8	10		12
B	Threads Per Inch	32	32	24	32	24
A	Major Dia of Thread (Min.)	.1380	.1640	.1900		.2160
C	Minor Dia	.114 .104	.139 .130	.156 .145	.164 .156	.181 .171
	Pitch Dia	.1214 .1177	.1475 .1437	.1672 .1629	.1736 .1697	.1933 .1889
F	Across Flats	.312 .302	.344 .332	.375 .362		.437 .428
G	Across Corners	.361 .344	.397 .378	.433 .413		.505 .488
H	Side Height (Min.)	.095	.110	.131		.176
E	Total Height	.148 .138	.167 .155	.194 .182		.245 .231
W	Washer Diameter	.440 .424	.487 .470	.532 .512		.617 .597
D	Washer Thickness	.020 .016	.021 .017	.023 .018		.023 .018
Y	Face Washer Height	.003	.003	.004		.004
S	Tooth Height (Min.)	.005	.006	.007		.008
M	Undercut Diameter	.291 .281	.327 .317	.361 .351		.417 .407
N	Undercut Width	.041 .035	.041 .035	.041 .035		.050 .044
P	Undercut Depth	.020 .016	.020 .016	.021 .017		.024 .020
K	Chamfer Dia (Nom.)	.156	.188	.219		.250
	Ford Part Numbers	55729-S	55730-S	55731-S	55732-S	55733-S

NOTES: For General Specifications see Page E-950.01. For Finishes see Section "Z" Addendum.
MATERIAL: Steel - M-3422-A (M-2K2-C), light case carburized at 1500-1650° F, water quenched. Case depth .002-.007.
Rockwell case 15N 70 minimum.
Locking feature consists of serrated washer face.

FORD MOTOR COMPANY
STANDARD PARTS

HEXAGON LOCK NUTS-STYLE 2

FREE RUNNING TYPE
CLASS 2B

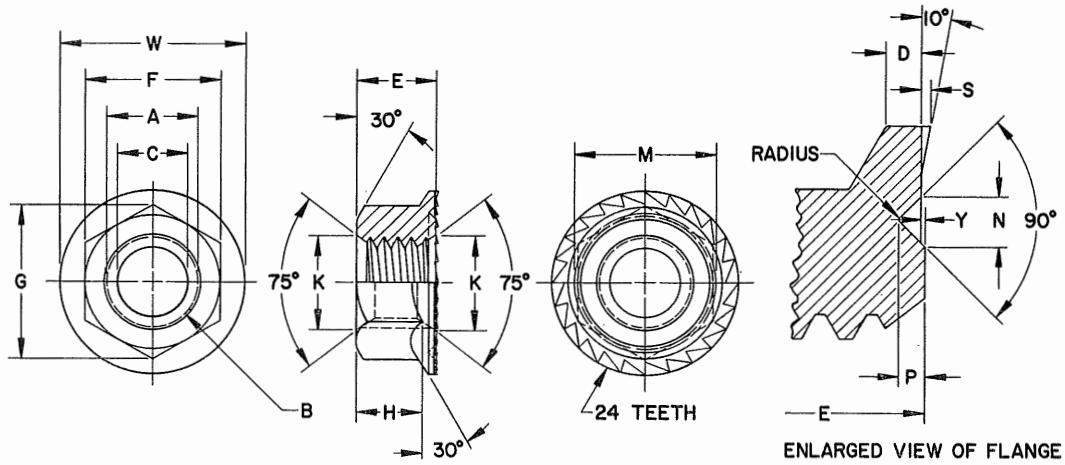

	Nominal Size	1/4		5/16		3/8		7/16		1/2	
B	Threads Per Inch	20	28	18	24	16	24	14	20	13	20
A	Major Dia of Thread (Min.)	.2500		.3125		.3750		.4375		.5000	
C	Minor Dia	.207 .196	.220 .211	.265 .252	.277 .267	.321 .307	.340 .330	.376 .360	.395 .383	.434 .417	.457 .446
	Pitch Dia	.2223 .2175	.2311 .2268	.2817 .2764	.2902 .2854	.3401 .3344	.3528 .3479	.3972 .3911	.4104 .4050	.4565 .4500	.4731 .4675
F	Across Flats	.437 .428		.500 .489		.562 .551		.687 .675		.750 .736	
G	Across Corners	.505 .488		.577 .557		.650 .628		.794 .768		.866 .840	
H	Side Height (Min.)	.185		.218		.279		.307		.362	
E	Total Height	.264 .244		.296 .281		.363 .346		.403 .383		.470 .449	
W	Washer Diameter	.630 .610		.706 .686		.793 .771		.966 .939		1.058 1.027	
D	Washer Thickness	.024 .019		.025 .020		.025 .020		.030 .025		.030 .025	
Y	Face Washer Height	.004		.005		.005		.006		.007	
S	Tooth Height (Min.)	.008		.009		.010		.012		.014	
M	Undercut Diameter	.441 .431		.509 .499		.585 .575		.701 .691		.777 .767	
N	Undercut Width	.050 .044		.050 .044		.050 .044		.065 .059		.065 .059	
P	Undercut Depth	.024 .020		.025 .021		.025 .021		.033 .029		.034 .030	
K	Chamfer Dia (Nom.)	.281		.359		.422		.484		.547	
	Ford Part Numbers	55734-S	55735-S	55736-S	55737-S	55738-S	55739-S	55740-S	55741-S	55742-S	55743-S

NOTES: For General Specifications see Page E-950.01. For Finishes see Section "Z" Addendum.
MATERIAL: Steel - M-3422-A (M-2K2-C), light case carburized at 1500-1650° F, water quenched. Case depth .002-.007.
Rockwell case 15N 70 minimum
Locking feature consists of serrated washer face.

FORD MOTOR COMPANY
STANDARD PARTS

HEXAGON LOCK NUTS-STYLE 3

PREVALING TORQUE TYPE
CLASS 2B

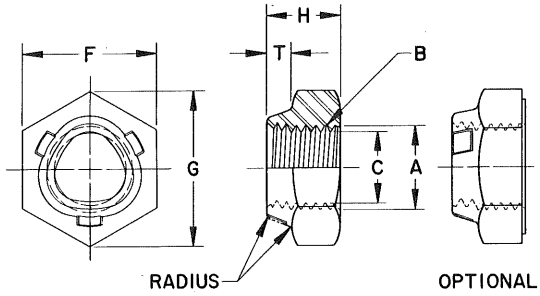

	Nominal Size *See Note for 1/4 and 5/16	3/8		7/16		1/2		9/16	
B	Threads Per Inch	16	24	14	20	13	20	12	18
A	Major Dia Thread (Min.)	.3750		.4375		.5000		.5625	
C	Minor Dia	.321 .307	.340 .330	.376 .360	.395 .383	.434 .417	.457 .446	.490 .472	.515 .502
	Pitch Dia	.3401 .3344	.3528 .3479	.3972 .3911	.4104 .4050	.4565 .4500	.4731 .4675	.5152 .5084	.5323 .5264
F	Across Flats	.5625 .551		.6875 .675		.7500 .736		.8750 .861	
G	Across Corners	.650 .628		.794 .768		.866 .840		1.010 .982	
H	Thickness	.337 .320		.385 .365		.448 .427		.496 .473	
T	Cone Height	.120 .110		.135 .125		.155 .145		.175 .165	
	Ford Part Numbers Grade B (May be Used for Grade A)	34419-S	34420-S	34421-S	34422-S	34423-S	34424-S	34425-S	34426-S
	Ford Part Numbers Grade C	55748-S	55749-S	55750-S	55751-S	55752-S	55753-S	55754-S	55755-S

	Nominal Size	5/8		3/4		7/8		1	
B	Threads Per Inch	11	18	10	16	9	14	8	12
A	Major Dia Thread (Min.)	.6250		.7500		.8750		1.000	
C	Minor Dia	.546 .527	.578 .565	.663 .642	.696 .682	.778 .755	.814 .798	.890 .865	.928 .910
	Pitch Dia	.5732 .5660	.5949 .5889	.6927 .6850	.7159 .7094	.8110 .8028	.8356 .8286	.9276 .9188	.9535 .9459
F	Across Flats	.9375 .922		1.1250 1.088		1.3125 1.269		1.5000 1.450	
G	Across Corners	1.083 1.051		1.299 1.240		1.516 1.447		1.732 1.653	
H	Thickness	.559 .535		.665 .617		.776 .724		.887 .831	
T	Cone Height	.195 .185		.230 .220		.265 .255		.305 .295	
	Ford Part Numbers Grade B (May be Used for Grade A)	34427-S	34428-S	34429-S	34430-S	34431-S	34432-S	34433-S	34434-S
	Ford Part Numbers Grade C	55756-S	55757-S	55758-S	55759-S	55760-S	55761-S	55762-S	55763-S

*For 1/4 and 5/16 sizes see Thick Style 3 Lock Nuts, page E-136.02.
Recommended Finish: S7. For other Finishes see Section "Z" Addendum.
MATERIAL: Grade A and B: SAE 1010 (M-2K2-C) Steel
Grade C: SAE 1038 (M-2K2-K) or SAE 1035 Steel Heat Treated Rockwell C26-32.
For General Specifications see page E-950.01.
Lock Nuts shall have a coating of non-staining soap, wax or oil to prevent thread galling at assembly.
Locking feature consists of three closed-in areas at top of nut. Areas not oriented with respect to hexagon.

FORD MOTOR COMPANY
STANDARD PARTS

HEXAGON LOCK NUTS-STYLE 4

PREVAILING TORQUE TYPE
CLASS 2B

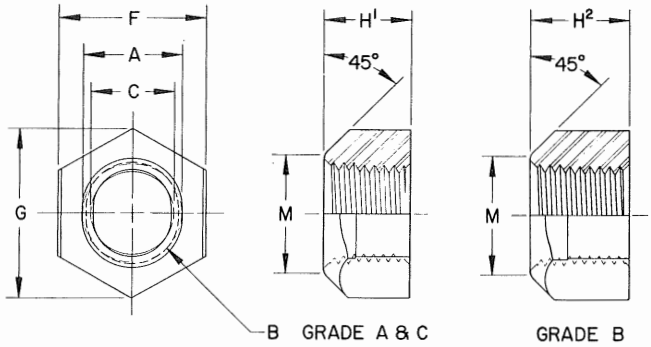

	Nominal Size		1/4		5/16		3/8		7/16		1/2	
B	Threads Per Inch		20	28	18	24	16	24	14	20	13	20
A	Major Dia of Thread (Min.)		.2500		.3125		.3750		.4375		.5000	
C	Minor Dia		.207 .196	.220 .211	.265 .252	.277 .267	.321 .307	.340 .330	.376 .360	.395 .383	.434 .417	.457 .446
	Pitch Dia		.2223 .2175	.2311 .2268	.2817 .2764	.2902 .2854	.3401 .3344	.3528 .3479	.3972 .3911	.4104 .4050	.4565 .4500	.4731 .4675
F	Across Flats		.4375 .428		.5000 .489		.5625 .551		.6875 .675		.7500 .736	
G	Across Corners		.505 .488		.577 .557		.650 .628		.794 .768		.866 .840	
H¹	Thickness (Grade A and C)		.226 .212		.273 .258		.337 .320		.385 .365		.448 .427	
H²	Thickness (Grade B)		.257 .243		.302 .292		.377 .360		.430 .410		.510 .490	
M	Chamfer Dia		.357 .347		.405 .395		.452 .442		.562 .552		.610 .600	
	Ford Part Numbers	Grade A	55669-S	55670-S	55671-S	55672-S	55673-S	55674-S	55675-S	55676-S	55677-S	55678-S
		Grade B	55689-S	55690-S	55691-S	55692-S	55693-S	55694-S	55695-S	55696-S	55697-S	55698-S
		Grade C	55709-S	55710-S	55711-S	55712-S	55713-S	55714-S	55715-S	55716-S	55717-S	55718-S

	Nominal Size		9/16		5/8		3/4		7/8		1	
B	Threads Per Inch		12	18	11	18	10	16	9	14	8	12
A	Major Dia of Thread (Min.)		.5625		.6250		.7500		.8750		1.000	
C	Minor Dia		.490 .472	.515 .502	.546 .527	.578 .565	.663 .642	.696 .682	.778 .755	.814 .798	.890 .865	.928 .910
	Pitch Dia		.5152 .5084	.5323 .5264	.5732 .5660	.5949 .5889	.6927 .6850	.7159 .7094	.8110 .8028	.8356 .8286	.9276 .9188	.9535 .9459
F	Across Flats		.8750 .861		.9375 .922		1.1250 1.088		1.3125 1.269		1.5000 1.450	
G	Across Corners		1.010 .982		1.083 1.051		1.299 1.240		1.516 1.447		1.732 1.653	
H¹	Thickness (Grade A and C)		.496 .473		.559 .535		.665 .617		.776 .724		.887 .831	
H²	Thickness (Grade B)		.555 .535		.645 .621		.750 .702		.862 .810		.958 .902	
M	Chamfer Dia		.720 .710		.767 .757		.940 .930		1.112 1.102		1.285 1.275	
	Ford Part Numbers	Grade A	55679-S	55680-S	55681-S	55682-S	55683-S	55684-S	55685-S	55686-S	55687-S	55688-S
		Grade B	55699-S	55700-S	55701-S	55702-S	55703-S	55704-S	55705-S	55706-S	55707-S	55708-S
		Grade C	55719-S	55720-S	55721-S	55722-S	55723-S	55724-S	55725-S	55726-S	55727-S	55728-S

Recommended Finish: S8. For other Finishes see Section "Z" Addendum.
MATERIAL: Grade A and B: Steel - AISI C-1108 or C-1110.
Grade C: Steel - SAE 1030 (M-2K2-H) Heat Treated. (See General Specifications)
For General Specifications see page E-950.01.
Lock Nuts shall have a coating of soap, wax, or oil to prevent thread galling at assembly. Plain Finished Lock Nuts (suffix-S) shall have a light phosphate coating (black) prior to the application of the soap or wax.
Locking feature consists of elliptical threads at top of nut.

FORD MOTOR COMPANY
STANDARD PARTS

HEXAGON LOCK NUTS-STYLE 5

PREVAILING TORQUE TYPE
CLASS 2B

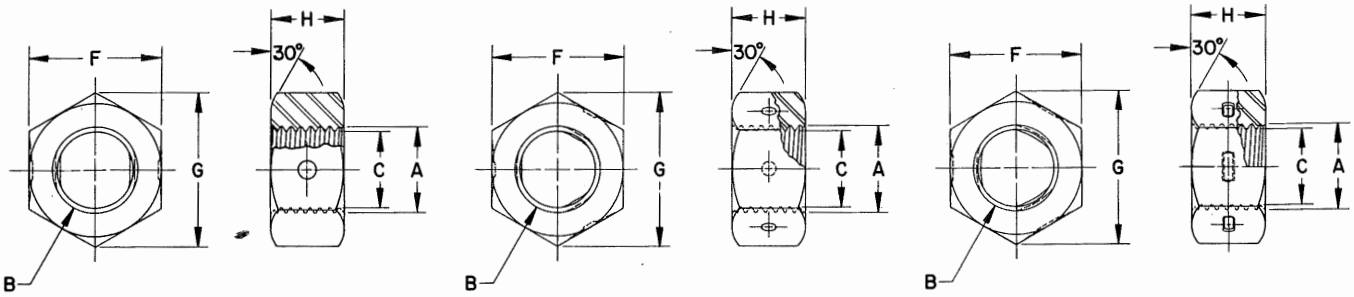

TYPE I TYPE II TYPE III

	Nominal Size		1/4		5/16		3/8		7/16		1/2	
B	Threads Per Inch		20	28	18	24	16	24	14	20	13	20
A	Major Dia of Thread (Min)		.2500		.3125		.3750		.4375		.5000	
C	Minor Diameter		.207 .196	.220 .211	.265 .252	.277 .267	.321 .307	.340 .330	.376 .360	.395 .383	.434 .417	.457 .446
	Pitch Diameter		.2223 .2175	.2311 .2268	.2817 .2764	.2902 .2854	.3401 .3344	.3528 .3479	.3972 .3911	.4104 .4050	.4565 .4500	.4731 .4675
F	Across Flats		.4375 .428		.5000 .489		.5625 .551		.6875 .675		.7500 .736	
G	Across Corners		.505 .488		.577 .557		.650 .628		.794 .768		.866 .840	
H	Thickness (Grade A and C)		.226 .212		.273 .258		.337 .320		.385 .365		.448 .427	
H	Thickness (Grade B)		.257 .243		.302 .292		.377 .360		.430 .410		.510 .490	
	Ford Part Numbers	Grade A	55800-S	55801-S	55802-S	55803-S	55804-S	55805-S	55806-S	55807-S	55808-S	55809-S
		Grade B	55820-S	55821-S	55822-S	55823-S	55824-S	55825-S	55826-S	55827-S	55828-S	55829-S
		Grade C	55840-S	55841-S	55842-S	55843-S	55844-S	55845-S	55846-S	55847-S	55848-S	55849-S

	Nominal Size		9/16		5/8		3/4		7/8		1	
B	Threads Per Inch		12	18	11	18	10	16	9	14	8	12
A	Major Dia of Thread (Min)		.5625		.6250		.7500		.8750		1.000	
C	Minor Diameter		.490 .472	.515 .502	.546 .527	.578 .565	.663 .642	.696 .682	.778 .755	.814 .798	.890 .865	.928 .910
	Pitch Diameter		.5152 .5084	.5323 .5264	.5732 .5660	.5949 .5889	.6927 .6850	.7159 .7094	.8110 .8028	.8356 .8286	.9276 .9188	.9535 .9459
F	Across Flats		.8750 .861		.9375 .922		1.1250 1.088		1.3125 1.269		1.5000 1.450	
G	Across Corners		1.010 .982		1.083 1.051		1.299 1.240		1.516 1.447		1.732 1.653	
H	Thickness (Grade A and C)		.496 .473		.559 .535		.665 .617		.776 .724		.887 .831	
H	Thickness (Grade B)		.555 .535		.645 .621		.750 .702		.862 .810		.958 .902	
	Ford Part Numbers	Grade A	55810-S	55811-S	55812-S	55813-S	55814-S	55815-S	55816-S	55817-S	55818-S	55819-S
		Grade B	55830-S	55831-S	55832-S	55833-S	55834-S	55835-S	55836-S	55837-S	55838-S	55839-S
		Grade C	55850-S	55851-S	55852-S	55853-S	55854-S	55855-S	55856-S	55857-S	55858-S	55859-S

Recommended Finish: S8. For other Finishes see Section "Z" Addendum.
MATERIAL: Grade A and B: SAE 1010 (M-2K2-C) Steel
Grade C: SAE 1038 (M-2K2-K) or SAE 1035 Steel Heat Treated Rockwell C26-32.
For General Specifications see page E-950.01.
Lock Nuts shall have a coating of non-staining soap, wax or oil to prevent thread galling at assembly.
Type I locking feature consists of two opposed impressions deflecting thread and ovalizing nut at mid-point.
Type II locking feature consists of three round locking pads, displacing threads inwardly without bore distortion.
Type III locking feature consists of three rectangular impressions causing inward displacement at center threads.

FORD MOTOR COMPANY
STANDARD PARTS

HEXAGON THICK LOCK NUTS-STYLE I

CLASS 2B
FREE RUNNING TYPE

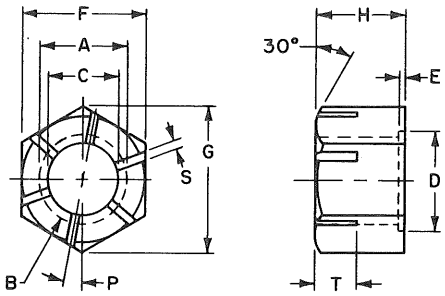

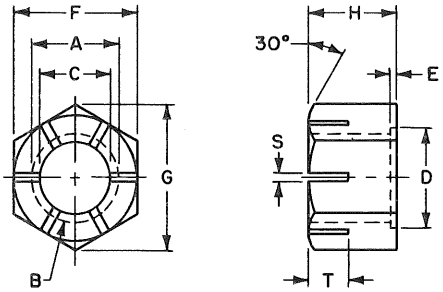

OPTIONAL

	Nominal Size	1/4		5/16		3/8		7/16		1/2	
B	Threads per Inch	20	28	18	24	16	24	14	20	13	20
A	Major Dia. Thread - Min.	.2500		.3125		.3750		.4375		.5000	
C	Minor Dia. Thread	.207 .196	.220 .211	.265 .262	.277 .267	.321 .307	.340 .330	.376 .360	.395 .383	.434 .417	.457 .446
	Pitch Diameter	.2223 .2175	.2311 .2268	.2817 .2764	.2902 .2854	.3401 .3344	.3528 .3479	.3972 .3911	.4104 .4050	.4565 .4500	.4731 .4675
F	Across Flats	.4375 .428		.5000 .489		.5625 .551		.6875 .675		.7500 .736	
G	Across Corners	.505 .488		.577 .557		.650 .628		.794 .698		.866 .840	
H	Thickness	.288 .274		.336 .320		.415 .398		.463 .444		.573 .552	
D	Recess Diameter	.38		.41		.47		.52		.62	
E	Recess Depth	.009 .019		.011 .021		.015 .025		.018 .028		.023 .033	
S	Slot Width	.031		.031		.047		.047		.047	
T	Slot Depth	.125		.156		.188		.219		.266	
P	Angle	10°		10°		10°		10°		10°	
	Ford Part Number	34390-S	34391-S	34392-S	34393-S	34394-S	34395-S	34396-S	34397-S	34398-S	34399-S

	Nominal Size	9/16		5/8		3/4		7/8		1	
B	Threads per Inch	12	18	11	18	10	16	9	14	8	12
A	Major Dia. Thread - Min.	.5625		.6250		.7500		.8750		1.000	
C	Minor Dia. Thread	.490 .472	.515 .502	.546 .527	.578 .565	.662 .642	.696 .682	.778 .755	.814 .718	.890 .865	.928 .910
	Pitch Diameter	.5152 .5084	.5323 .5264	.5732 .5660	.5949 .5889	.6927 .6850	.7159 .7094	.8110 .8028	.8356 .8286	.9276 .9188	.9535 .9459
F	Across Flats	.8750 .861		.9375 .922		1.1250 1.088		1.3125 1.269		1.5000 1.450	
G	Across Corners	1.010 .982		1.083 1.051		1.299 1.240		1.516 1.447		1.732 1.653	
H	Thickness	.621 .598		.731 .706		.827 .798		.922 .890		1.018 .982	
D	Recess Diameter	.75		.80		1.00		1.17		1.33	
E	Recess Depth	.026 .036		.031 .041		.036 .046		.040 .050		.045 .055	
S	Slot Width	.047		.047		.062		.062		.062	
T	Slot Depth	.297		.344		.391		.438		.469	
P	Angle	8°		8°		8°		8°		7°	
	Ford Part Numbers	34400-S	34401-S	34402-S	34403-S	34404-S	34405-S	34406-S	34407-S	34408-S	34409-S

Recommended Finish: S8. For other Finishes see Section "Z" Addendum.
MATERIAL: SAE 1010 (M-2K2-C) Steel.
For General Specifications see page E-950.01.
Locking Feature consists of slots, allowing top segments to be displaced inwardly by seating load.

FORD MOTOR COMPANY
STANDARD PARTS

HEXAGON THICK LOCK NUTS-STYLE 3

PREVAILING TORQUE TYPE
CLASS 2B

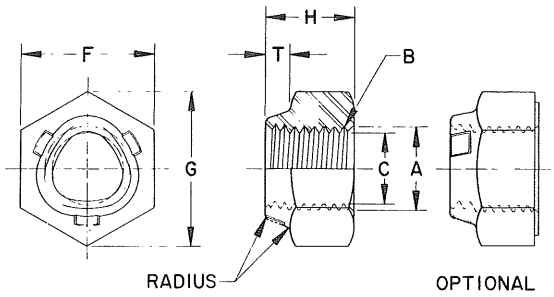

	Nominal Size	1/4		5/16		3/8		7/16		1/2	
B	Threads Per Inch	20	28	18	24	16	24	14	20	13	20
A	Major Dia of Thread (Min)	.2500		.3125		.3750		.4375		.5000	
C	Minor Diameter	.207 .196	.220 .211	.265 .252	.277 .267	.321 .307	.340 .330	.376 .360	.395 .383	.434 .417	.457 .446
	Pitch Diameter	.2223 .2175	.2311 .2268	.2817 .2764	.2902 .2854	.3401 .3344	.3528 .3479	.3972 .3911	.4104 .4050	.4565 .4500	.4731 .4675
F	Across Flats	.4375 .428		.5000 .489		.5625 .551		.6875 .675		.7500 .736	
G	Across Corners	.505 .488		.577 .557		.650 .628		.794 .768		.866 .840	
H	Thickness	.288 .274		.336 .320		.415 .398		.463 .444		.573 .552	
T	Cone Height	.095 .085		.105 .095		.120 .110		.135 .125		.155 .145	
	Ford Part Numbers Grade B (May be used for Grade A)	34440-S	34441-S	34442-S	34443-S	34444-S	34445-S	34446-S	34447-S	34448-S	34449-S
	Ford Part Numbers Grade C	55764-S	55765-S	55766-S	55767-S	55768-S	55769-S	55770-S	55771-S	55772-S	55773-S

	Nominal Size	9/16		5/8		3/4		7/8		1	
B	Threads Per Inch	12	18	11	18	10	16	9	14	8	12
A	Major Dia of Thread (Min)	.5625		.6250		.7500		.8750		1.000	
C	Minor Diameter	.490 .472	.515 .502	.546 .527	.578 .565	.663 .642	.696 .682	.778 .755	.814 .798	.890 .865	.928 .910
	Pitch Diameter	.5152 .5084	.5323 .5264	.5732 .5660	.5949 .5889	.6927 .6850	.7159 .7094	.8110 .8028	.8356 .8286	.9276 .9188	.9535 .9459
F	Across Flats	.8750 .861		.9375 .922		1.1250 1.088		1.3125 1.269		1.5000 1.450	
G	Across Corners	1.010 .982		1.083 1.051		1.299 1.240		1.516 1.447		1.732 1.653	
H	Thickness	.621 .598		.731 .706		.827 .798		.922 .890		1.018 .982	
T	Cone Height	.175 .165		.195 .185		.230 .220		.265 .255		.305 .295	
	Ford Part Numbers Grade B (May be used for Grade A)	34450-S	34451-S	34452-S	34453-S	34454-S	34455-S	34456-S	34457-S	34458-S	34459-S
	Ford Part Numbers Grade C	55774-S	55775-S	55776-S	55777-S	55778-S	55779-S	55780-S	55781-S	55782-S	55783-S

Recommended Finish: S7. For other Finishes see Section "Z" Addendum.
MATERIAL: Grade A and B: SAE 1010 (M-2K2-C) Steel
Grade C: SAE 1038 (M-2K2-K) or SAE 1035 Steel Heat Treated Rockwell C26-32.
For General Specifications see Page E-950.01.
Lock Nuts shall have a coating of non-staining soap, wax or oil to prevent thread galling at assembly.
Locking feature consists of three closed-in areas at top of nut. Areas not oriented with respect to hexagon.

FORD MOTOR COMPANY
STANDARD PARTS

CROWN NUTS — CLASS 2B

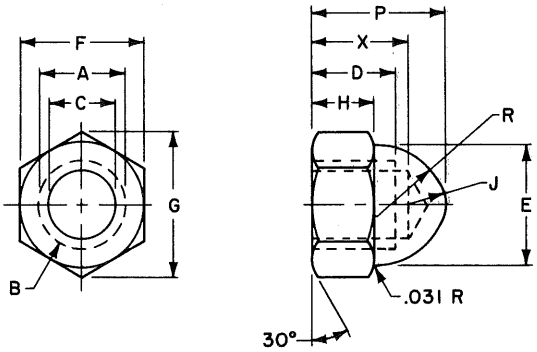

	Nominal Size	6		8		10		12	
B	Threads per Inch	32	40	32	36	24	32	24	28
A	Major Dia. Thread - Min.	.1380		.1640		.1900		.2160	
C	Minor Diameter Thread	.114 .104	.119 .111	.139 .130	.142 .134	.156 .145	.164 .156	.181 .171	.186 .177
	Pitch Diameter	.1214 .1177	.1252 .1218	.1475 .1437	.1496 .1460	.1672 .1629	.1736 .1697	.1933 .1889	.1970 .1928
F	Width of Flat - Max.	.312		.312		.375		.375	
G	Across Corners - Min.	.344		.344		.413		.413	
E	Body Diameter	.297		.297		.359		.359	
H	Hexagon Height	.156		.156		.188		.188	
P	Height Overall	.344		.344		.406		.406	
R	Body Radius	.172		.172		.219		.219	
J	Crown Radius	.078		.078		.094		.094	
X	Tap Drill Depth - Max.	.250		.250		.281		.312	
D	Tap Depth - Min.	.156		.156		.188		.219	
	Ford Part Numbers When Made from Steel	34158-S	34174-S	34159-S	34175-S	34160-S	34176-S	34161-S	34177-S
	Ford Part Numbers When Made from Brass	34192-S		34193-S		34194-S		34195-S	

	Nominal Size	1/4		5/16		3/8		7/16	
B	Threads per Inch	20	28	18	24	16	24	14	20
A	Major Dia. Thread - Min.	.2500		.3125		.3750		.4375	
C	Minor Diameter Thread	.207 .196	.220 .211	.265 .252	.277 .267	.321 .307	.340 .330	.376 .360	.395 .383
	Pitch Diameter	.2223 .2175	.2311 .2268	.2817 .2764	.2902 .2854	.3401 .3344	.3528 .3479	.3972 .3911	.4104 .4050
F	Width of Flat - Max.	.438		.500		.562		.625	
G	Across Corners - Min.	.488		.557		.628		.698	
E	Body Diameter	.406		.469		.531		.594	
H	Hexagon Height	.219		.250		.281		.312	
P	Height Overall	.469		.531		.625		.688	
R	Body Radius	.250		.281		.328		.359	
J	Crown Radius	.109		.125		.141		.156	
X	Tap Drill Depth - Max.	.344		.406		.453		.516	
D	Tap Depth - Min.	.250		.312		.375		.438	
	Ford Part Numbers When Made from Steel	34162-S	34178-S	34163-S	34179-S	34164-S	34180-S	34165-S	34181-S
	Ford Part Numbers When Made from Brass	34196-S		34197-S		34198-S		34199-S	

NOTES: For General Specifications See Page E-950.01. For Finishes See Addendum.
MATERIAL: SAE 1010 (M-2K2-C) Steel
M-2K1 Brass

FORD MOTOR COMPANY
STANDARD PARTS

CROWN NUTS — CLASS 2B

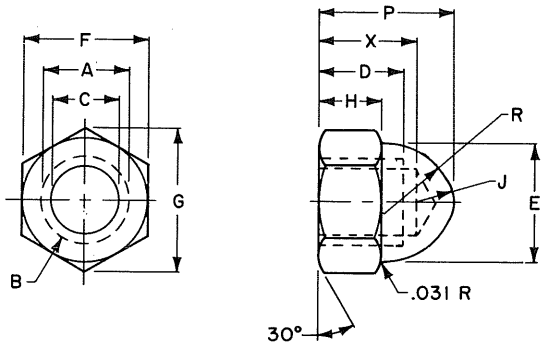

	Nominal Size	1/2		9/16		5/8		3/4	
B	Threads per Inch	13	20	12	18	11	18	10	16
A	Major Diameter Thread - Min.	.5000		.5625		.625		.750	
C	Minor Diameter Thread	.434 .417	.457 .446	.490 .472	.515 .502	.546 .527	.578 .565	.663 .642	.696 .682
	Pitch Diameter	.4565 .4500	.4731 .4675	.5152 .5084	.5323 .5264	.5732 .5660	.5949 .5889	.6927 .6850	.7159 .7094
F	Width of Flats - Max.	.750		.875		.938		1.062	
G	Across Corners - Min.	.840		.982		1.051		1.191	
E	Body Diameter	.719		.844		.906		1.031	
H	Hexagon Height	.375		.438		.469		.531	
P	Height Overall	.812		.938		1.000		1.156	
R	Body Radius	.422		.500		.531		.594	
J	Crown Radius	.188		.219		.234		.266	
X	Tap Drill Depth - Max.	.594		.688		.750		.875	
D	Tap Depth - Min.	.500		.562		.625		.750	
	Ford Part Numbers	34208-S	34224-S	34209-S	34225-S	34210-S	34226-S	34211-S	34227-S

	Nominal Size	7/8		1		1 1/8		1 1/4	
B	Threads per Inch	9	14	8	12	7	12	7	12
A	Major Diameter Thread - Min.	.875		1.000		1.125		1.250	
C	Minor Diameter Thread	.778 .755	.814 .798	.898 .865	.928 .910	.998 .970	1.053 1.035	1.123 1.095	1.178 1.160
	Pitch Diameter	.8110 .8028	.8356 .8286	.9276 .9188	.9535 .9459	1.0416 1.0322	1.0787 1.0709	1.1668 1.1572	1.2039 1.1959
F	Width of Flats	1.250		1.438		1.625		1.812	
G	Across Corners - Min.	1.403		1.615		1.826		2.038	
E	Body Diameter	1.219		1.406		1.594		1.781	
H	Hexagon Height	.625		.719		.812		.906	
P	Height Overall	1.359		1.547		1.750		1.953	
R	Body Radius	.703		.812		.922		1.031	
J	Crown Radius	.312		.359		.406		.453	
X	Tap Drill Depth - Max.	1.000		1.125		1.312		1.438	
D	Tap Depth - Min.	.875		1.000		1.125		1.250	
	Ford Part Numbers	34212-S	34228-S	34213-S	34229-S	34214-S	34230-S	34215-S	34231-S

NOTES: For General Specifications See Page E-950.01. For Finishes See Addendum.
MATERIAL: SAE 1010 (M-2K2-C) Steel.

FORD MOTOR COMPANY
STANDARD PARTS

NUT & WASHER ASS'Y — CLASS 2B

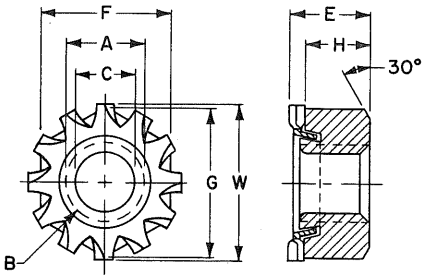

	Nominal Size	6		8		10		1/4	
B	Threads per Inch	32	40	32	36	24	32	20	28
A	Major Dia. Thread - Min.	.1380		.1640		.1900		.2500	
C	Minor Diameter Thread	.114 .104	.119 .111	.139 .130	.142 .134	.156 .145	.164 .156	.207 .196	.220 .211
	Pitch Diameter	.1214 .1177	.1252 .1218	.1475 .1437	.1496 .1460	.1672 .1629	.1736 .1697	.2223 .2175	.2311 .2268
F	Across Flats	.3125 .302		.3438 .332		.375 .362		.4375 .423	
G	Across Corners	.361 .344		.397 .378		.433 .413		.505 .482	
H	Thickness	.114 .102		.130 .117		.130 .117		.193 .178	
E	Height - Overall (approx.)	.141		.156		.156		.234	
W	Washer Diameter	.355 .345		.381 .370		.406 .395		.506 .494	
	Ford Part Numbers	34651-S	34652-S	34653-S	34654-S	34655-S	34656-S	34657-S	34658-S

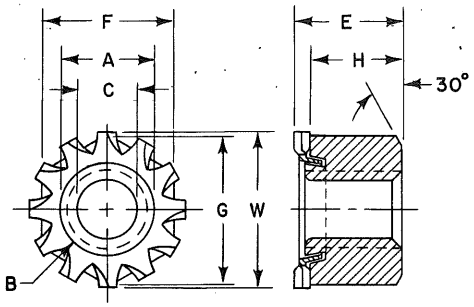

	Nominal Size	1/4		5/16		3/8	
B	Threads per Inch	20	28	18	24	16	24
A	Major Dia. Thread - Min.	.2500		.3125		.3750	
C	Minor Diameter Thread	.207 .196	.220 .211	.265 .252	.277 .267	.321 .307	.340 .330
	Pitch Diameter	.2223 .2175	.2311 .2268	.2817 .2764	.2902 .2854	.3401 .3344	.3528 .3479
F	Across Flats	.4375 .428		.500 .489		.5625 .551	
G	Across Corners	.505 .488		.577 .557		.650 .628	
H	Thickness	.226 .212		.273 .258		.336 .320	
E	Height - Overall (approx.)	.281		.328		.391	
W	Washer Diameter	.506 .494		.592 .579		.665 .651	
	Ford Part Numbers	34659-S	34660-S	34661-S	34662-S	34663-S	34664-S

NOTES: For General Specifications See Page E-950.01. For Finishes See Addendum.
Material: Nut - SAE 1010 (M-2K2-C) Steel.
Washer - SAE 1050 or Equivalent Steel Hardened to R/C 40-50.

FORD MOTOR COMPANY
STANDARD PARTS

SQUARE NUTS

CLASS 2B

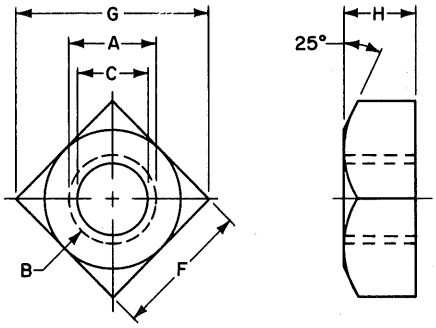

	Nominal Size	1/4		5/16		3/8		7/16	
B	Threads per Inch	20	28	18	24	16	24	14	20
A	Major Dia. Thread - Min.	.2500		.3125		.3750		.4375	
C	Minor Diameter Thread	.207 .196	.220 .211	.265 .252	.277 .267	.321 .307	.340 .330	.376 .360	.395 .383
	Pitch Diameter	.2223 .2175	.2311 .2268	.2817 .2764	.2902 .2854	.3401 .3344	.3528 .3479	.3972 .3911	.4104 .4050
F	Across Flats	.4375 .425		.5625 .547		.6250 .606		.7500 .728	
G	Across Corners	.619 .584		.795 .751		.884 .832		1.061 1.000	
H	Thickness	.235 .203		.283 .249		.346 .310		.394 .356	
	Ford Part Numbers	34095-S	34108-S	34096-S	34109-S	34097-S	34110-S	34098-S	34111-S

	Nominal Size	1/2		5/8		3/4	
B	Threads per Inch	13	20	11	18	10	16
A	Major Dia. Thread - Min.	.5000		.6250		.7500	
C	Minor Diameter Thread	.434 .417	.457 .446	.546 .527	.578 .565	.663 .642	.696 .682
	Pitch Diameter	.4565 .4500	.4731 .4675	.5732 .5660	.5949 .5889	.6927 .6850	.7159 .7094
F	Across Flats	.8125 .788		1.000 .969		1.1250 1.088	
G	Across Corners	1.149 1.082		1.414 1.330		1.591 1.494	
H	Thickness	.458 .418		.569 .525		.680 .632	
	Ford Part Numbers	34099-S	34112-S	34101-S	34114-S	34102-S	34115-S

NOTES: For General Specifications See Page E-950.01. For Finishes See Addendum.
MATERIAL: SAE 1010 (M-2K2-C) Steel.

FORD MOTOR COMPANY
STANDARD PARTS

SQUARE MACHINE SCREW NUTS — CLASS 2B

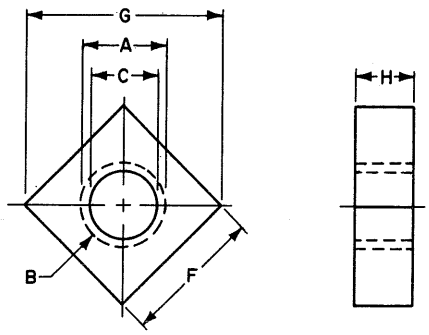

	Nominal Size	6		8		10		12	
B	Threads per Inch	32	40	32	36	24	32	24	28
A	Major Dia. Thread - Min.	.1380		.1640		.1900		.2160	
C	Minor Diameter Threads	.114 .104	.119 .111	.139 .130	.142 .134	.156 .145	.164 .156	.181 .171	.186 .177
	Pitch Diameter	.1214 .1177	.1252 .1218	.1475 .1437	.1496 .1460	.1672 .1629	.1736 .1697	.1933 .1889	.1970 .1928
F	Across Flats	.3125 .302		.3438 .332		.3750 .362		.4375 .423	
G	Across Corners	.442 .415		.486 .456		.530 .497		.619 .581	
H	Thickness	.114 .102		.130 .117		.130 .117		.161 .148	
	Ford Part Numbers When Made From Steel	34125-S	34139-S	34126-S	34140-S	34127-S	34141-S	34128-S	34142-S
	Ford Part Numbers When Made From Brass	34132-S		34133-S		34134-S		34135-S	

	Nominal Size	1/4		5/16		3/8	
B	Threads per Inch	20	28	18	24	16	24
A	Major Dia. Thread - Min.	.2500		.3125		.3750	
C	Minor Diameter Threads	.207 .196	.220 .211	.265 .252	.277 .267	.321 .307	.340 .330
	Pitch Diameter	.2223 .2175	.2311 .2268	.2817 .2764	.2902 .2854	.3401 .3344	.3528 .3479
F	Across Flats	.4375 .423		.5625 .545		.6250 .607	
G	Across Corners	.619 .581		.795 .748		.884 .833	
H	Thickness	.193 .178		.225 .208		.257 .239	
	Ford Part Numbers When Made from Steel	34129-S	34143-S	34130-S	34144-S	34131-S	34145-S
	Ford Part Numbers When Made from Brass	34136-S		34137-S		34138-S	

NOTES: For General Specifications See Page E-950.01. For Finishes See Addendum.
MATERIAL: SAE 1010 (M-2K2-C) Steel
M-2K1 Brass

FORD MOTOR COMPANY
STANDARD PARTS

CLINCH NUTS — CLASS 2B

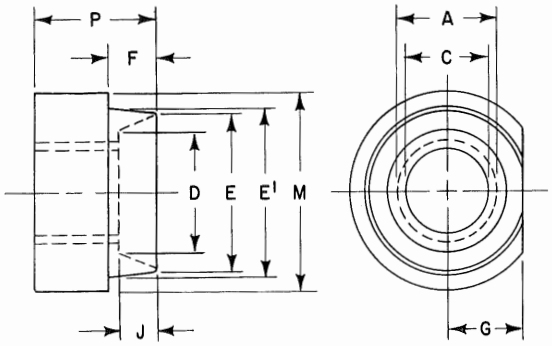

Nominal Size	Threads Per Inch	Ford Part Numbers	A Major Dia. Minimum	C Minor Diameter Max.	C Minor Diameter Min.	Pitch Diameter Max.	Pitch Diameter Min.	D C'Sunk Dia.	E Pilot Dia.	E' Pilot Dia.	F Pilot Depth	G Center to Flat	J C'Sunk Depth	M Dia. of Nut	P Thick. of Nut	Metal Thick. Max.
10	24 32	34232-S 34235-S	.1900	.156 .164	.145 .156	.1672 .1736	.1629 .1697	.266	.428 .425	.435 .432	.145 .140	.152 .147	.125	.562	.270 .255	.083
12	24 28	34238-S 34241-S	.2160	.181 .186	.171 .177	.1933 .1970	.1889 .1928									
1/4	20 28	34244-S 34247-S	.2500	.207 .220	.196 .211	.2223 .2311	.2175 .2268									
5/16	18 24	34274-S 34277-S	.3125	.265 .277	.252 .267	.2817 .2902	.2764 .2854	.438	.620 .615	.625 .620	.188 .183	.250 .245	.172	.750	.505 .495	.126
3/8	16 24	34280-S 34283-S	.3750	.321 .340	.307 .330	.3401 .3528	.3344 .3479									
7/16	14 20	34286-S 34289-S	.4375	.376 .395	.360 .383	.3972 .4104	.3911 .4050	.500	.745 .740	.750 .745	.187 .181	.277 .272	.188	.875	.505 .495	.126
7/16	14 20	34292-S 34295-S	.4375	.376 .395	.360 .383	.3972 .4104	.3911 .4050	.562	.807 .802	.812 .807	.188 .183	.344 .339	.172	.938	.599 .589	.126
1/2	13 20	34298-S 34301-S	.5000	.434 .457	.417 .446	.4565 .4731	.4500 .4675									
1/2	13 20	34304-S 34307-S	.5000	.434 .457	.417 .446	.4565 .4731	.4500 .4675	.625	.870 .865	.875 .870	.285 .280	.375 .372	.188	1.000	.630 .620	.226
9/16	12 18	34310-S 34313-S	.5625	.490 .515	.472 .502	.5152 .5323	.5084 .5264	.688	.995 .990	1.000 .995	.234 .229	.438 .433	.219	1.125	.693 .683	.172
5/8	11 18	34316-S 34319-S	.6250	.546 .578	.527 .565	.5732 .5949	.5660 .5889									
9/16	12 18	34322-S 34325-S	.5625	.490 .515	.472 .502	.5152 .5323	.5084 .5264	.688	.932 .927	.937 .932	.284 .278	.406 .403	.188	1.063	.693 .683	.226
3/4	10 16	34328-S 34331-S	.750	.663 .696	.642 .682	.6927 .7159	.6850 .7094	.812	1.182 1.177	1.187 1.182	.282 .277	.532 .527	.266	1.312	.786 .776	.226

NOTES: For General Specifications See Page E-950.01. For Finishes See Addendum.
MATERIAL: SAE 1010 (M-2K2-C) Steel.
For Recommended Hole Sizes See Engineering Drafting Manual.

FORD MOTOR COMPANY
STANDARD PARTS

CLINCH NUTS — CLASS 2B

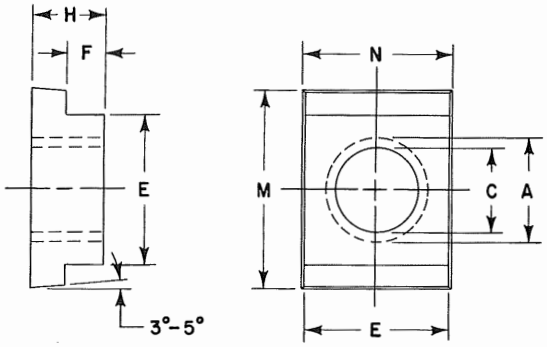

Nominal Size	Threads per Inch	Ford Part Numbers	A Major Diameter	C Minor Diameter Max.	C Minor Diameter Min.	Pitch Diameter Max.	Pitch Diameter Min.	E Pilot Width	F Pilot Depth	M Length	N Width	H Thickness	Maximum Metal Thickness	H-F Side Height
6	32	34334-S	.1380	.114	.104	.1214	.1177	.368 .362	.073 .067	.503 .497	.373 .363	.151 .145	.037	.078
8	32	34335-S	.1640	.139	.130	.1475	.1437							
10	32	34336-S	.1900	.164	.156	.1736	.1697							
12	24	34337-S	.2160	.181	.171	.1933	.1889							
1/4	28	34339-S	.2500	.220	.211	.2311	.2268							
12	24	34340-S	.2160	.181	.171	.1933	.1889	.368 .362	.081 .075	.503 .497	.375 .365	.190 .184	.046	.109
1/4	28	34342-S	.2500	.220	.211	.2311	.2268							
12	24	34343-S	.2160	.181	.171	.1933	.1889	.368 .362	.112 .106	.503 .497	.375 .365	.190 .184	.078	.078
1/4	20	34344-S	.2500	.207	.196	.2223	.2175							
1/4	28	34345-S	.2500	.220	.211	.2311	.2268							
1/4	28	34347-S	.2500	.220	.211	.2311	.2268	.368 .362	.130 .124	.503 .497	.375 .365	.208 .202	.094	.078
5/16	18	34354-S	.3125	.265	.252	.2817	.2764	.430 .424	.097 .091	.628 .622	.437 .427	.190 .184	.062	.093
5/16	24	34355-S	.3125	.277	.267	.2902	.2854							
5/16	18	34356-S	.3125	.265	.252	.2817	.2764	.488 .482	.128 .122	.690 .684	.495 .485	.253 .247	.078	.125
5/16	24	34357-S	.3125	.277	.267	.2902	.2854							
5/16	18	34358-S	.3125	.265	.252	.2817	.2764	.550 .544	.128 .122	.753 .747	.557 .547	.284 .278	.078	.156
5/16	24	34359-S	.3125	.277	.267	.2902	.2854							
3/8	16	34360-S	.3750	.321	.307	.3401	.3344							
3/8	24	34361-S	.3750	.340	.330	.3528	.3479							
5/16	18	34362-S	.3125	.265	.252	.2817	.2764	.488 .482	.159 .153	.690 .684	.495 .485	.284 .278	.109	.125
5/16	24	34363-S	.3125	.277	.267	.2902	.2854							

NOTES: For General Specifications See Page E-950.01. For Finishes See Addendum.
MATERIAL: SAE 1010 (M-2K2-C) Steel.
For Recommended Hole Sizes See Engineering Drafting Manual.

TEE NUTS

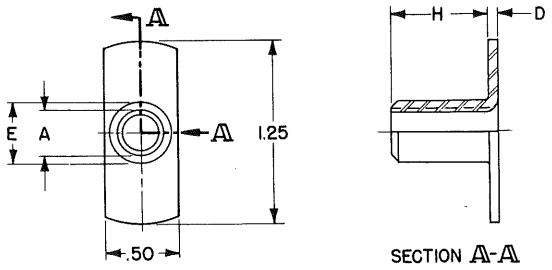

PLAIN BASE

Nominal Size	Threads per Inch	Pitch Diameter		A – Major Diameter	H	E	D	Ford Part Numbers
		Min.	Max.	Min.				
10	32	.1697	.1736	.1900	.312	.232-.227	.035	34460-S
10	32	.1697	.1736	.1900	.438	.232-.227	.035	34461-S
1/4	20	.2175	.2223	.2500	.344	.311-.306	.050	34464-S
1/4	20	.2175	.2223	.2500	.625	.311-.306	.050	34465-S
1/4	28	.2268	.2311	.2500	.344	.320-.315	.050	34466-S
1/4	28	.2268	.2311	.2500	.625	.320-.315	.050	34467-S
5/16	18	.2764	.2817	.3125	.312	.391-.386	.062	34468-S
5/16	18	.2764	.2817	.3125	.812	.366-.356	.062	34469-S
5/16	24	.2854	.2902	.3125	.812	.375-.365	.062	34470-S

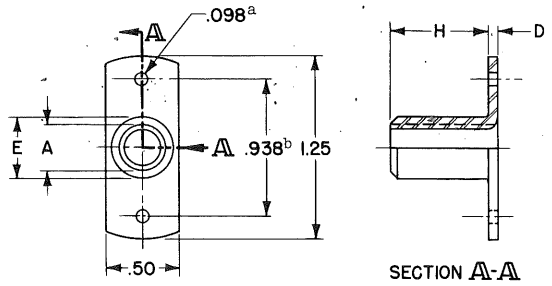

2 HOLE BASE

Nominal Size	Threads per Inch	Pitch Diameter		A – Major Diameter	H	E	D	Ford Part Numbers
		Min.	Max.	Min.				
10	32	.1697	.1736	.1900	.312	.232-.227	.035	34471-S
10	32	.1697	.1736	.1900	.312	.232-.227	.035	34472-S a b
1/4	20	.2175	.2223	.2500	.344	.311-.306	.050	34473-S
1/4	20	.2175	.2223	.2500	.625	.311-.306	.050	34474-S
1/4	28	.2268	.2311	.2500	.344	.320-.315	.050	34475-S
1/4	28	.2268	.2311	.2500	.625	.320-.315	.050	34476-S
5/16	18	.2764	.2817	.3125	.438	.366-.356	.062	34477-S
5/16	18	.2764	.2817	.3125	.500	.366-.356	.062	34478-S
5/16	18	.2764	.2817	.3125	.812	.366-.356	.062	34479-S
5/16	24	.2854	.2902	.3125	.312	.400-.395	.062	34480-S
5/16	24	.2854	.2902	.3125	.500	.375-.365	.062	34481-S
5/16	24	.2854	.2902	.3125	.812	.375-.365	.062	34482-S

NOTES: For General Specifications See Page E-950.01. For Finishes See Addendum.
"D" dimension has a tolerance of +.015, -.000.
a Diameter .160 for 34472-S
b Dimension .750 for 34472-S
MATERIAL: LCOH Steel

TEE NUTS

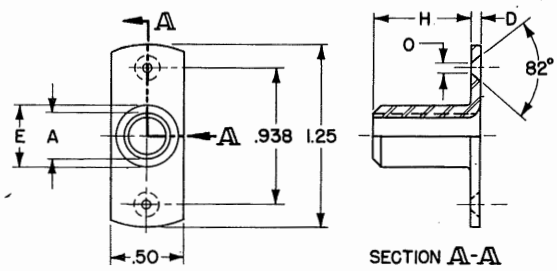

2 C'SUNK HOLE BASE SIDE

Nominal Size	Threads per Inch	Pitch Diameter		A—Major Diameter	H	E	O	D	Ford Part Numbers
		Min.	Max.	Min.					
1/4	20	.2175	.2223	.2500	.344	.311-.306	.160	.050	34485-S
1/4	20	.2175	.2223	.2500	.625	.311-.306	.160	.050	34486-S
1/4	28	.2268	.2311	.2500	.625	.320-.315	.234	.050	34488-S
5/16	18	.2764	.2817	.3125	.812	.366-.356	.234	.062	34489-S
5/16	24	.2854	.2902	.3125	.812	.375-.365	.234	.062	34490-S

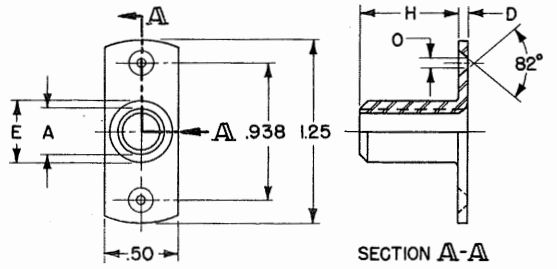

2 C'SUNK HOLE BARREL SIDE

Nominal Size	Threads per Inch	Pitch Diameter		A—Major Diameter	H	E	O	D	Ford Part Numbers
		Min.	Max.	Min.					
1/4	20	.2175	.2223	.2500	.344	.311-.306	.160	.050	34493-S
1/4	20	.2175	.2223	.2500	.625	.311-.306	.160	.050	34494-S

NOTES: For General Specifications See Page E-950.01. For Finishes See Addendum.
"D" dimension has a tolerance of +.015, -.000.
MATERIAL: LCOH Steel.

TEE NUTS

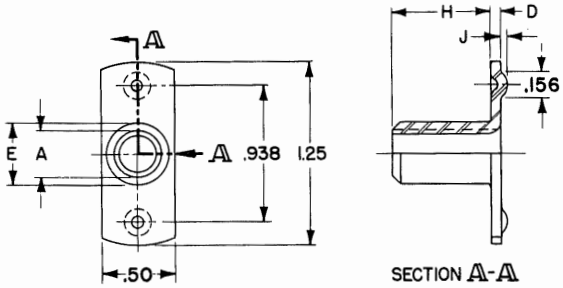

2 BOSS BASE SIDE

Nominal Size	Threads per Inch	Pitch Diameter		A—Major Diameter	H	E	J	D	Ford Part Numbers
		Min.	Max.	Min.					
10	32	.1697	.1736	.1900	.312	.232-.227	.040-.030	.035	34499-S
1/4	20	.2175	.2223	.2500	.344	.311-.306	.045-.030	.050	34501-S
1/4	28	.2268	.2311	.2500	.344	.320-.315	.045-.030	.050	34503-S
1/4	28	.2268	.2311	.2500	.625	.320-.315	.045-.030	.050	34504-S
5/16	18	.2764	.2817	.3125	.438	.366-.356	.050-.035	.062	34505-S
5/16	18	.2764	.2817	.3125	.312	.391-.386	.050-.035	.062	34506-S
5/16	24	.2854	.2902	.3125	.438	.375-.365	.050-.035	.062	34507-S
5/16	24	.2854	.2902	.3125	.500	.375-.365	.050-.035	.062	34508-S
5/16	24	.2854	.2902	.3125	.312	.400-.395	.050-.035	.062	34509-S

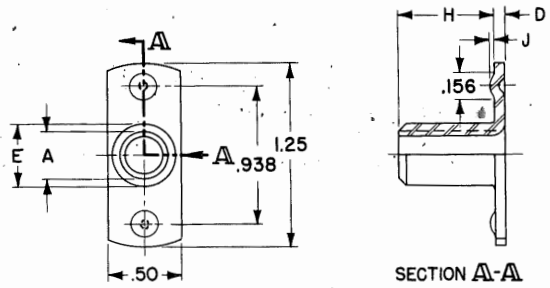

2 BOSS BARREL SIDE

Nominal Size	Threads per Inch	Pitch Diameter		A—Major Diameter	H	E	J	D	Ford Part Numbers
		Min.	Max.	Min.					
1/4	20	.2175	.2223	.2500	.625	.311-.306	.045-.030	.050	34511-S
5/16	24	.2854	.2902	.3125	.500	.375-.365	.050-.035	.062	34512-S

NOTES: For General Specifications See Page E-950.01. For Finishes See Addendum.
"D" dimension has a tolerance of +.015, -.000.
MATERIAL: LCOH Steel.

TEE NUTS

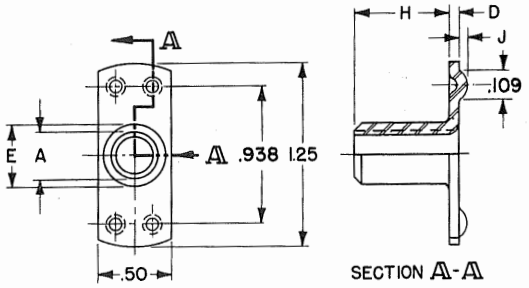

4 BOSS BASE SIDE

Nominal Size	Threads per Inch	Pitch Diameter		A—Major Diameter	H	E	J	D	Ford Part Numbers
		Min.	Max.	Min.					
10	32	.1697	.1736	.1900	.438	.232-.227	.040-.030	.035	34514-S
1/4	20	.2175	.2223	.2500	.344	.311-.306	.045-.030	.050	34516-S
1/4	20	.2175	.2223	.2500	.625	.311-.306	.045-.030	.050	34517-S
1/4	28	.2268	.2311	.2500	.344	.320-.315	.045-.030	.050	34518-S
1/4	28	.2268	.2311	.2500	.625	.320-.315	.045-.030	.050	34519-S

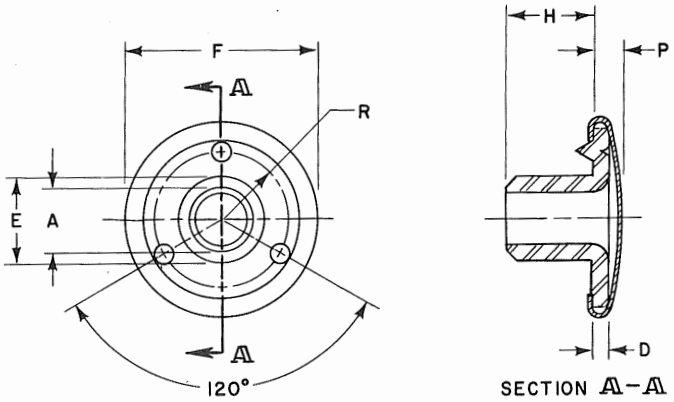

3 SHORT PRONG BARREL SIDE

Nominal Size	Threads per Inch	Pitch Diameter		A—Major Diameter	F	H	E	P	R	D	Ford Part Numbers
		Min.	Max.	Min.							
10	32	.1697	.1736	.1900	.797	.266	.232-.227	.172	.297	.035	34635-S
1/4	20	.2175	.2223	.2500	.797	.297	.311-.306	.156	.297	.050	34636-S
5/16	18	.2764	.2817	.3125	.938	.359	.391-.386	.203	.344	.062	34637-S
3/8	16	.3344	.3401	.3750	1.125	.406	.471-.466	.156	.406	.075	34638-S

NOTES: For General Specifications See Page E-950.01. For Finishes See Addendum.
"D" dimension has a tolerance of +.015, -.000.
MATERIAL: LCOH Steel.

TEE NUTS

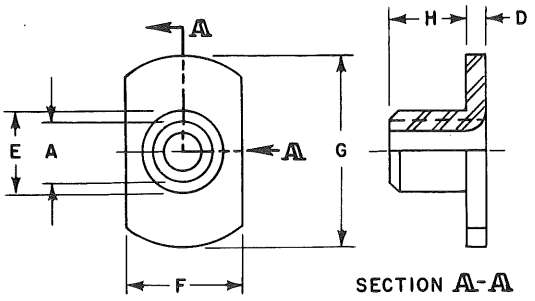

PLAIN BASE

Nominal Size	Threads per Inch	Pitch Diameter Min.	Pitch Diameter Max.	A—Major Diameter Min.	G	H	E	F	D	Ford Part Numbers
10	32	.1697	.1736	.1900	.750	.156	.232-.227	.500	.035	34522-S
10	32	.1697	.1736	.1900	.750	.281	.232-.227	.312	.035	34523-S
10	32	.1697	.1736	.1900	.750	.281	.232-.227	.375	.035	34524-S
10	32	.1697	.1736	.1900	.750	.281	.232-.227	.438	.035	34525-S
10	32	.1697	.1736	.1900	.750	.281	.232-.227	.500	.035	34526-S
1/4	20	.2175	.2223	.2500	.750	.312	.311-.306	.500	.050	34527-S
1/4	28	.2268	.2311	.2500	.750	.312	.320-.315	.500	.050	34528-S
5/16	18	.2764	.2817	.3125	.875	.375	.391-.386	.562	.062	34529-S
5/16	24	.2854	.2902	.3125	.875	.375	.400-.395	.562	.062	34530-S

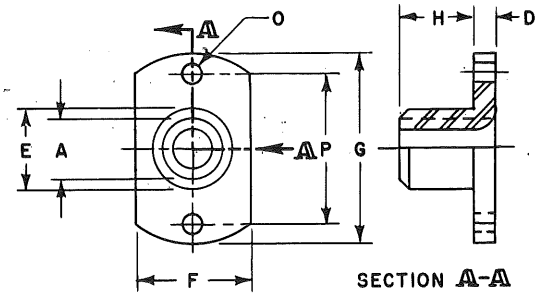

2 HOLE BASE

Nominal Size	Threads per Inch	Pitch Diameter Min.	Pitch Diameter Max.	A—Major Diameter Min.	G	H	E	O	F	P	D	Ford Part Numbers
8	32	.1437	.1475	.1640	.750	.219	.213-.208	.098	.500	.594	.035	34533-S
10	32	.1697	.1736	.1900	.750	.188	.232-.227	.098	.500	.594	.035	34534-S
10	32	.1697	.1736	.1900	.750	.281	.232-.227	.098	.500	.594	.035	34535-S
10	32	.1697	.1736	.1900	.750	.281	.232-.227	.128	.500	.594	.035	34536-S
1/4	20	.2175	.2223	.2500	.750	.312	.311-.306	.098	.500	.594	.050	34537-S
1/4	20	.2175	.2223	.2500	.750	.438	.311-.306	.098	.500	.594	.050	34538-S
1/4	28	.2268	.2311	.2500	.750	.312	.320-.315	.098	.500	.594	.050	34539-S
5/16	18	.2764	.2817	.3125	.875	.375	.391-.386	.098	.562	.688	.062	34540-S
5/16	24	.2854	.2902	.3125	.875	.375	.400-.395	.098	.562	.688	.062	34541-S

NOTES: For General Specifications See Page E-950.01. For Finishes See Addendum.
"D" dimension has a tolerance of +.015, -.000.
MATERIAL: LCOH Steel.

TEE NUTS

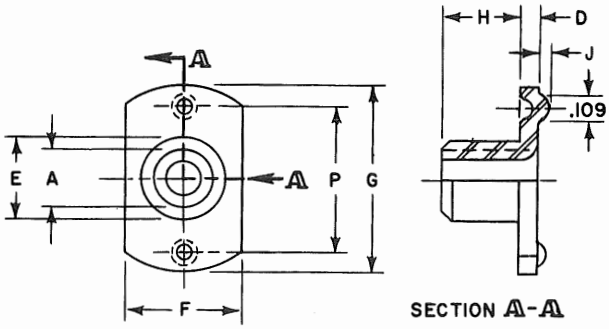

2 BOSS BASE SIDE

Nominal Size	Threads per Inch	Pitch Diameter		A— Major Diameter	G	H	E	J	F	P	D	Ford Part Numbers
		Min.	Max.	Min.								
10	32	.1697	.1736	.1900	.750	.156	.232-.227	.040-.030	.375	.594	.035	34543-S
10	32	.1697	.1736	.1900	.750	.219	.232-.227	.040-.030	.375	.594	.035	34544-S
10	32	.1697	.1736	.1900	.750	.281	.232-.227	.040-.030	.375	.594	.035	34545-S
10	32	.1697	.1736	.1900	.750	.281	.232-.227	.040-.030	.438	.594	.035	34546-S
10	32	.1697	.1736	.1900	.750	.281	.232-.227	.040-.030	.500	.594	.035	34547-S
1/4	20	.2175	.2223	.2500	.750	.250	.311-.306	.045-.030	.500	.531	.050	34548-S
1/4	20	.2175	.2223	.2500	.750	.312	.311-.306	.045-.030	.500	.594	.050	34549-S
1/4	28	.2268	.2311	.2500	.750	.312	.320-.315	.045-.030	.500	.594	.050	34550-S
5/16	18	.2764	.2817	.3125	.875	.375	.391-.386	.050-.035	.562	.688	.062	34551-S
5/16	24	.2854	.2902	.3125	.875	.375	.400-.395	.050-.035	.438	.688	.062	34552-S
5/16	24	.2854	.2902	.3125	.875	.375	.400-.395	.050-.035	.562	.688	.062	34553-S

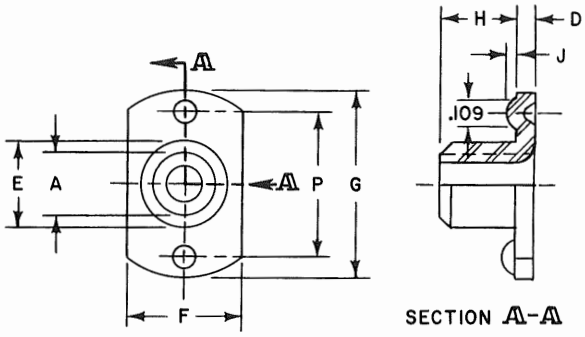

2 BOSS BARREL SIDE

Nominal Size	Threads per Inch	Pitch Diameter		A— Major Diameter	G	H	E	J	F	P	D	Ford Part Numbers
		Min.	Max.	Min.								
10	32	.1697	.1736	.1900	.750	.281	.232-.227	.045-.030	.500	.594	.035	34554-S
1/4	20	.2175	.2223	.2500	.750	.312	.311-.306	.045-.030	.500	.594	.050	34555-S
1/4	28	.2268	.2311	.2500	.750	.312	.320-.315	.045-.030	.500	.594	.050	34556-S
5/16	18	.2764	.2817	.3125	.875	.375	.391-.386	.050-.035	.562	.688	.062	34557-S
5/16	24	.2854	.2902	.3125	.875	.375	.400-.395	.050-.035	.562	.688	.062	34558-S

NOTES: For General Specifications See Page E-950.01. For Finishes See Addendum.
"D" dimension has a tolerance of +.015, -.000.
MATERIAL: LCOH Steel.

TEE NUTS

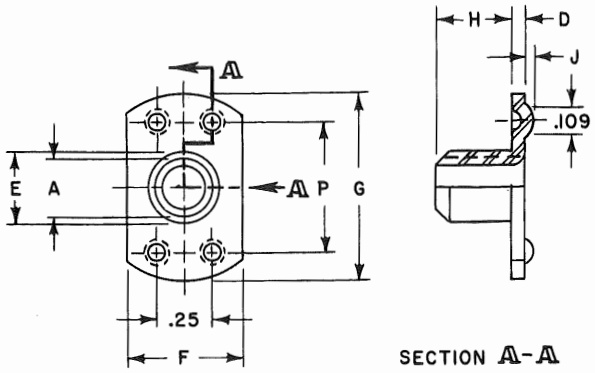

4 BOSS BASE SIDE

Nominal Size	Threads per Inch	Pitch Diameter		A-Major Diameter	G	H	E	J	F	P	D	Ford Part Numbers
		Min.	Max.	Min.								
8	32	.1437	.1475	.1640	.750	.219	.213-.208	.040-.030	.500	.562	.035	34559-S
10	32	.1697	.1736	.1900	.750	.281	.232-.227	.040-.030	.500	.562	.035	34560-S
10	32	.1697	.1736	.1900	.750	.438	.232-.227	.040-.030	.500	.562	.035	34561-S
1/4	20	.2175	.2223	.2500	.750	.250	.311-.306	.045-.030	.500	.562	.050	34562-S
1/4	20	.2175	.2223	.2500	.750	.312	.311-.306	.045-.030	.500	.562	.050	34563-S
1/4	28	.2268	.2311	.2500	.750	.312	.320-.315	.045-.030	.500	.562	.050	34564-S
5/16	18	.2764	.2817	.3125	.875	.375	.391-.386	.050-.035	.562	.688	.062	34565-S
5/16	24	.2854	.2902	.3125	.875	.375	.400-.395	.050-.035	.562	.688	.062	34566-S

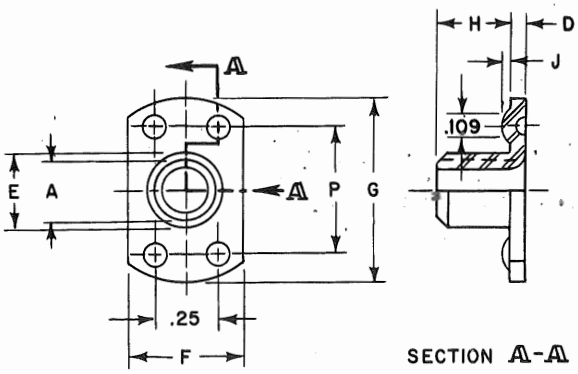

4 BOSS BARREL SIDE

Nominal Size	Threads per Inch	Pitch Diameter		A-Major Diameter	G	H	E	J	F	P	D	Ford Part Numbers
		Min.	Max.	Min.								
1/4	20	.2175	.2223	.2500	.750	.312	.311-.306	.045-.030	.500	.562	.050	34568-S
1/4	28	.2268	.2311	.2500	.750	.312	.320-.315	.045-.030	.500	.562	.050	34569-S
5/16	18	.2764	.2817	.3125	.875	.375	.391-.386	.050-.035	.562	.688	.062	34570-S

NOTES: For General Specifications See Page E-950.01. For Finishes See Addendum.
"D" dimension has tolerance of +.015, -.000.
MATERIAL: LCOH Steel.

TEE NUTS

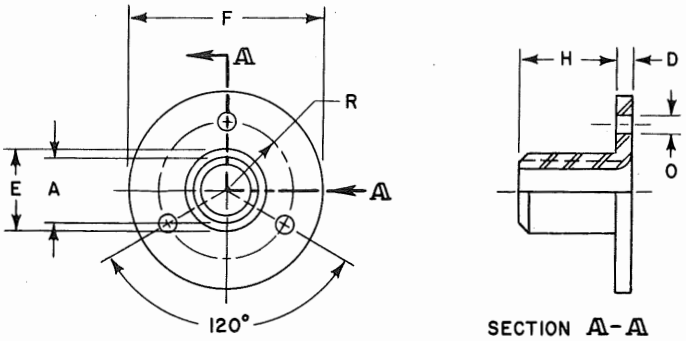

3 HOLE BASE

Nominal Size	Threads per Inch	Pitch Diameter		A- Major Diameter	F	H	E	O	R	D	Ford Part Numbers
		Min.	Max.	Min.							
10	32	.1697	.1736	.1900	.750	.188	.232-.227	.098	.297	.035	34574-S
1/4	20	.2175	.2223	.2500	.750	.312	.311-.306	.098	.297	.050	34575-S
1/4	20	.2175	.2223	.2500	.750	.562	.311-.306	.098	.297	.050	34576-S
5/16	18	.2764	.2817	.3125	.875	.375	.391-.386	.098	.344	.062	34578-S
5/16	24	.2854	.2902	.3125	.875	.375	.400-.395	.098	.344	.062	34580-S
5/16	24	.2854	.2902	.3125	.875	.625	.400-.395	.098	.344	.062	34581-S
3/8	16	.3344	.3401	.3750	1.0	.438	.471-.466	.145	.375	.075	34582-S
3/8	24	.3479	.3528	.3750	1.0	.438	.485-.480	.145	.375	.075	34583-S

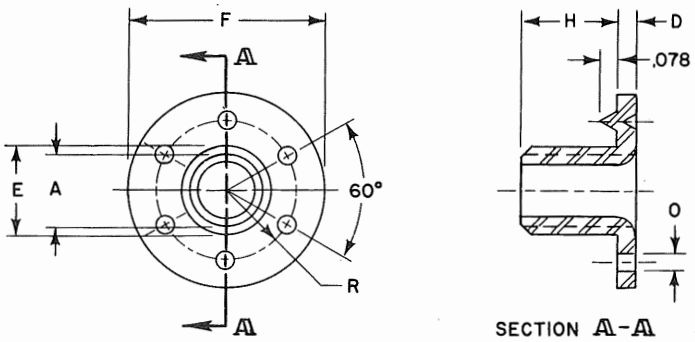

3 HOLE 3 PRONG BARREL SIDE

Nominal Size	Threads per Inch	Pitch Diameter		A- Major Diameter	F	H	E	O	R	D	Ford Part Numbers
		Min.	Max.	Min.							
8	32	.1437	.1475	.1640	.750	.219	.213-.208	.098	.297	.035	34584-S
10	32	.1697	.1736	.1900	.750	.188	.232-.227	.098	.297	.035	34585-S
10	32	.1697	.1736	.1900	.750	.281	.232-.227	.098	.297	.035	34586-S
1/4	20	.2175	.2223	.2500	.750	.250	.311-.306	.098	.297	.050	34587-S
1/4	20	.2175	.2223	.2500	.750	.312	.311-.306	.098	.297	.050	34588-S
1/4	20	.2175	.2223	.2500	.750	.562	.311-.306	.098	.297	.050	34589-S
1/4	28	.2268	.2311	.2500	.750	.312	.320-.315	.098	.297	.050	34590-S
5/16	18	.2764	.2817	.3125	.875	.375	.391-.386	.098	.344	.062	34591-S
5/16	18	.2764	.2817	.3125	.875	.594	.391-.386	.098	.344	.062	34593-S
5/16	18	.2764	.2817	.3125	.875	.625	.391-.386	.098	.344	.062	34594-S
5/16	24	.2854	.2902	.3125	.875	.375	.400-.395	.098	.344	.062	34595-S
5/16	24	.2854	.2902	.3125	.875	.625	.400-.395	.098	.344	.062	34596-S
3/8	16	.3344	.3401	.3750	1.0	.438	.471-.466	.145	.375	.075	34597-S

NOTES: For General Specifications See Page E-950.01. For Finishes See Addendum.
"D" dimension has a tolerance of +.015, -.000.
MATERIAL: LCOH Steel

TEE NUTS

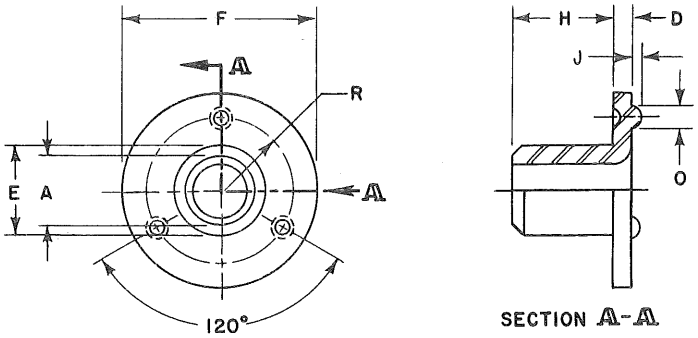

3 BOSS BASE SIDE

Nominal Size	Threads per Inch	Pitch Diameter		A - Major Diameter	F	H	E	O	J	R	D	Ford Part Numbers
		Min.	Max.	Min.								
8	32	.1437	.1475	.1640	.750	.219	.213-.208	.109	.040-.030	.297	.035	34599-S
10	32	.1697	.1736	.1900	.750	.281	.232-.227	.109	.040-.030	.297	.035	34600-S
10	32	.1697	.1736	.1900	.750	.500	.232-.227	.109	.040-.030	.297	.035	34601-S
1/4	20	.2175	.2223	.2500	.750	.312	.311-.306	.109	.045-.030	.297	.050	34603-S
1/4	20	.2175	.2223	.2500	.750	.438	.311-.306	.109	.045-.030	.297	.050	34604-S
1/4	20	.2175	.2223	.2500	.750	.562	.311-.306	.109	.045-.030	.297	.050	34605-S
1/4	28	.2268	.2311	.2500	.750	.312	.320-.315	.109	.045-.030	.297	.050	34606-S
5/16	18	.2764	.2817	.3125	.875	.375	.391-.386	.141	.050-.035	.344	.062	34607-S
5/16	18	.2764	.2817	.3125	.875	.625	.391-.386	.141	.050-.035	.344	.062	34608-S
5/16	24	.2854	.2902	.3125	.875	.250	.400-.395	.141	.050-.035	.344	.062	34609-S
5/16	24	.2854	.2902	.3125	.875	.375	.400-.395	.141	.050-.035	.344	.062	34610-S

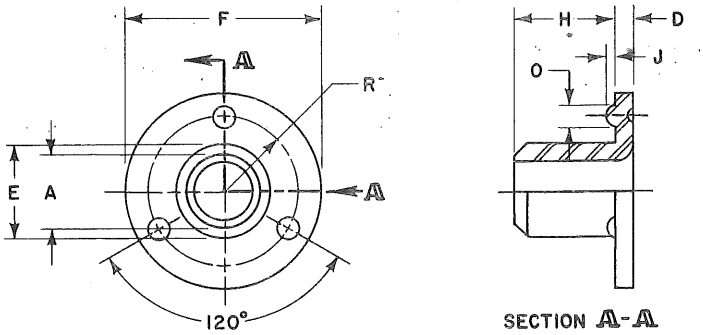

3 BOSS BARREL SIDE

Nominal Size	Threads per Inch	Pitch Diameter		A - Major Diameter	F	H	E	O	J	R	D	Ford Part Numbers
		Min.	Max.	Min.								
10	32	.1697	.1736	.1900	.750	.281	.232-.227	.109	.040-.030	.297	.035	34615-S
1/4	20	.2175	.2223	.2500	.750	.312	.311-.306	.109	.045-.030	.297	.050	34616-S
1/4	20	.2175	.2223	.2500	.750	.578	.320-.315	.094	.045-.030	.297	.050	34617-S
1/4	28	.2268	.2311	.2500	.750	.312	.320-.315	.109	.045-.030	.297	.050	34618-S
5/16	18	.2764	.2817	.3125	.875	.375	.391-.386	.141	.050-.035	.344	.062	34619-S
5/16	18	.2764	.2817	.3125	.875	.625	.391-.386	.141	.050-.035	.344	.062	34620-S
5/16	24	.2854	.2902	.3125	.875	.375	.400-.395	.141	.050-.035	.344	.062	34621-S
5/16	24	.2854	.2902	.3125	.875	.625	.400-.395	.141	.050-.035	.344	.062	34622-S
3/8	16	.3344	.3401	.3750	1.0	.438	.471-.466	.172	.055-.040	.391	.075	34624-S
3/8	24	.3479	.3528	.3750	1.0	.438	.485-.480	.172	.055-.040	.391	.075	34625-S

NOTES: For General Specifications See Page E-950.01. For Finishes See Addendum.
"D" dimension has a tolerance of +.015, -.000.
MATERIAL: LCOH Steel.

TEE NUTS

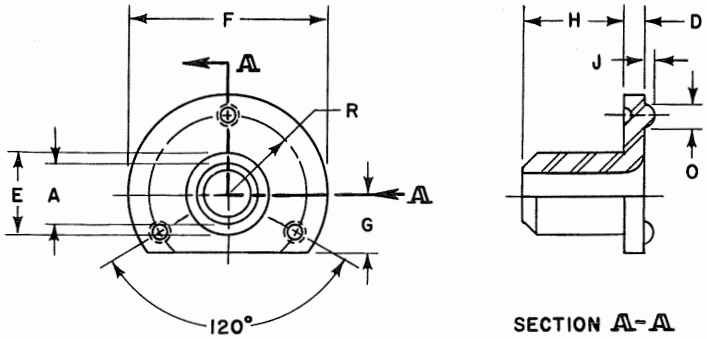

3 BOSS BASE SIDE

Nominal Size	Threads per Inch	Pitch Diameter Min.	Pitch Diameter Max.	A-Major Diameter Min.	F	H	E	O	J	G	R	D	Ford Part Numbers
10	32	.1697	.1736	.1900	.750	.281	.232-.227	.109	.040-.030	.125	.281	.035	34626-S
1/4	20	.2175	.2223	.2500	.750	.312	.311-.306	.109	.045-.030	.188	.297	.050	34627-S
5/16	18	.2764	.2817	.3125	.875	.375	.391-.386	.141	.050-.035	.250	.344	.062	34629-S
5/16	24	.2854	.2902	.3125	.875	.250	.400-.395	.141	.050-.035	.250	.344	.062	34630-S
5/16	24	.2854	.2902	.3125	.875	.375	.400-.395	.141	.050-.035	.250	.344	.062	34631-S

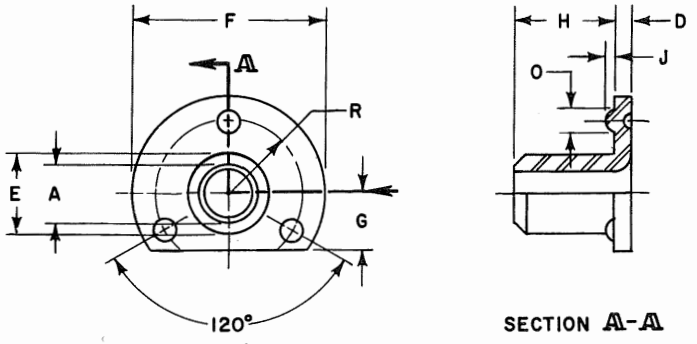

3 BOSS BARREL SIDE

Nominal Size	Threads per Inch	Pitch Diameter Min.	Pitch Diameter Max.	A-Major Diameter Min.	F	H	E	O	J	G	R	D	Ford Part Numbers
1/4	20	.2175	.2223	.2500	.750	.312	.311-.306	.109	.045-.030	.188	.297	.050	34633-S
3/8	24	.3479	.3528	.3750	1.0	.438	.485-.480	.172	.055-.040	.312	.391	.075	34634-S

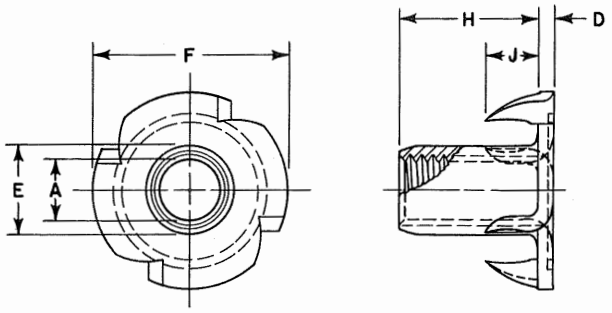

4 PRONG

Nominal Size	Threads per Inch	Pitch Diameter Min.	Pitch Diameter Max.	A-Major Diameter Min.	F	H	E	J	D	Ford Part Numbers
5/16	18	.2764	.2817	.3125	.875	.625	.391-.386	.262-.312	.062	34646-S
5/16	24	.2854	.2902	.3125	.875	.625	.400-.395	.262-.312	.062	34647-S

NOTES: For General Specifications See Page E-950.01. For Finishes See Addendum.
"D" dimension has a tolerance of +.015, -.000.
MATERIAL: LCOH Steel.

FORD MOTOR COMPANY
STANDARD PARTS

SPRING NUTS — FLAT

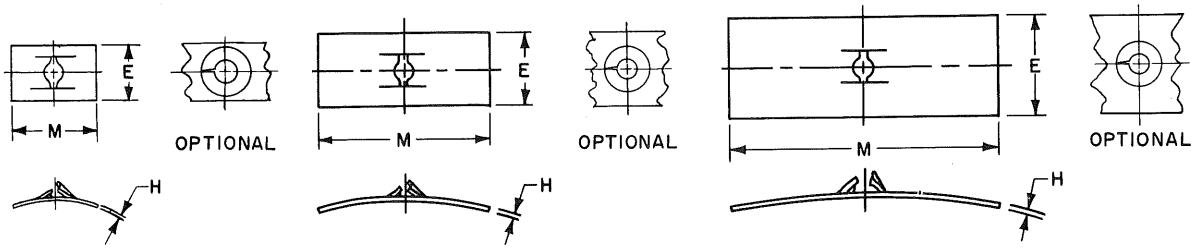

TYPE I STANDARD — TYPE II SPANNER — TYPE III LONG SPANNER

Screw Size	Screw Description	Type	Ford Part Numbers	M	E	H
6-32	Machine	I	45000-S	.44	.28	.017
		II	45001-S	.88	.38	.017
		III	45002-S	1.38	.50	.017
6-18	"A" Tapping	I	45003-S	.50	.31	.025
		II	45004-S	.88	.44	.025
		III	45005-S	1.38	.53	.025
8-32	Machine	I	45006-S	.50	.31	.017
		II	45007-S	.88	.44	.017
		III	45008-S	1.38	.53	.017
8-15	"A" Tapping	I	45009-S	.62	.41	.028
		II	45010-S	.88	.47	.028
		III	45011-S	1.25	.56	.028
10-24	Machine	I	45012-S	.62	.38	.022
		II	45013-S	1.00	.47	.022
		III	45014-S	1.38	.56	.022
10-12	"A" Tapping	I	45015-S	.75	.50	.031
		II	45016-S	1.12	.59	.031
		III	45017-S	1.38	.69	.031
1/4-20	Machine	I	45018-S	.75	.50	.025
		II	45019-S	1.12	.59	.025
		III	45020-S	1.38	.69	.025
14-10	"A" Tapping	I	45021-S	.88	.56	.037
		II	45022-S	1.06	.62	.037
		III	45023-S	1.38	.69	.037

NOTES: For General Specifications See Page E-950.01. For Finishes See Addendum.
MATERIAL: Spring steel M-3420-A or M-3420-B.
USAGE: When nut functions only as locking means for bolt or screw, Type I is recommended. When strength and speed of assembly are considerations or field servicing is involved the tapping screw pitches are recommended. When greater area of load distribution is required i.e., to function also as spanner washer, Types II or III are recommended.

FORD MOTOR COMPANY
STANDARD PARTS

SPRING NUTS

STUD CLIP—FLAT

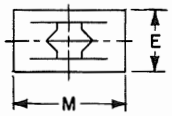

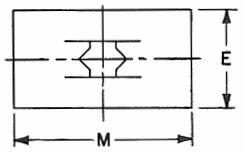

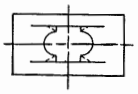

DESIGN VARIATION
FOR HEAVY THICKNESS ONLY

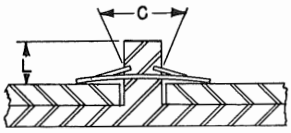

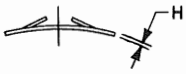

TYPE I
STANDARD

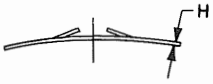

TYPE II
SPANNER

Stud Tolerance: + or - .005 on dia.

C Stud Diameter	L Stud Length	Maximum Taper/in.
1/16 to 1/8	.18	.052
5/32 to 1/4	.25	.040
5/16 to 1/2	.31	.033
5/8	.38	.026

Stud Diameter	Type		Ford Part Numbers	M	E	H
1/16	I	Light	45024-S	.38	.22	.012
		Medium	45025-S			.014
		Heavy	45026-S			.017
	II	Light	45027-S	.56	.34	.012
		Medium	45028-S			.014
		Heavy	45029-S			.017
3/32	I	Light	45030-S	.45	.23	.012
		Medium	45031-S			.014
		Heavy	45032-S			.017
	II	Light	45033-S	.70	.38	.012
		Medium	45034-S			.014
		Heavy	45035-S			.017
1/8	I	Light	45036-S	.58	.31	.012
		Medium	45037-S			.014
		Heavy	45038-S			.017
	II	Light	45039-S	.90	.50	.012
		Medium	45040-S			.014
		Heavy	45041-S			.017
5/32	I	Light	45042-S	.56	.38	.012
		Medium	45043-S			.014
		Heavy	45044-S			.017
	II	Light	45045-S	.88	.56	.012
		Medium	45046-S			.014
		Heavy	45047-S			.017
3/16	I	Light	45048-S	.62	.38	.012
		Medium	45049-S			.017
		Heavy	45050-S			.020
	II	Light	45051-S	.98	.56	.012
		Medium	45052-S			.017
		Heavy	45053-S			.020
1/4	I	Light	45054-S	.62	.44	.012
		Medium	45055-S			.017
		Heavy	45056-S			.020
	II	Light	45057-S	.98	.62	.012
		Medium	45058-S			.017
		Heavy	45059-S			.020

NOTES: For General Specifications See Page E-950.01. For Finishes See Addendum.
MATERIAL: Spring steel M-3420-A or M-3420-B.
USAGE: When stud clip functions only as locking means Type I is recommended. When greater area of load distribution is required i.e., to function also as spanner washer Type II is recommended. Light: Designed for use on plastic studs. Medium: Designed for use on soft metal studs. Heavy: Designed for use on hardened metal or chrome plated studs.

FORD MOTOR COMPANY
STANDARD PARTS

SPRING NUTS — FLAT TWIN TYPE

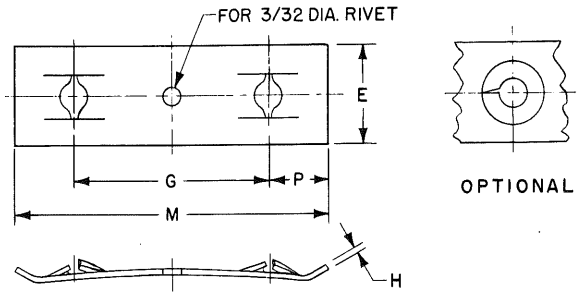

Screws		M	E	G	P	H	Ford Part Numbers
Size	Description						
6-32	Machine	1.12	.38	.500	.31	.017	45060-S
		1.25	.38	.625	.31	.017	45061-S
		1.38	.38	.750	.31	.017	45062-S
		1.50	.38	.875	.31	.017	45063-S
		1.62	.38	1.000	.31	.017	45064-S
6-18	"A" Tapping	1.12	.38	.500	.31	.025	45065-S
		1.25	.38	.625	.31	.025	45066-S
		1.38	.38	.750	.31	.025	45067-S
		1.50	.38	.875	.31	.025	45068-S
		1.62	.38	1.000	.31	.025	45069-S
8-32	Machine	1.12	.38	.500	.31	.017	45070-S
		1.25	.38	.625	.31	.017	45071-S
		1.38	.38	.750	.31	.017	45072-S
		1.50	.38	.875	.31	.017	45073-S
		1.62	.38	1.000	.31	.017	45074-S
8-15	"A" Tapping	1.12	.38	.500	.31	.028	45075-S
		1.25	.38	.625	.31	.028	45076-S
		1.38	.38	.750	.31	.028	45077-S
		1.50	.38	.875	.31	.028	45078-S
		1.62	.38	1.000	.31	.028	45079-S
10-24	Machine	1.12	.50	.500	.31	.022	45080-S
		1.25	.50	.625	.31	.022	45081-S
		1.38	.50	.750	.31	.022	45082-S
		1.50	.50	.875	.31	.022	45083-S
		1.62	.50	1.000	.31	.022	45084-S
10-12	"A" Tapping	1.12	.50	.500	.31	.031	45085-S
		1.25	.50	.625	.31	.031	45086-S
		1.38	.50	.750	.31	.031	45087-S
		1.50	.50	.875	.31	.031	45088-S
		1.62	.50	1.000	.31	.031	45089-S
1/4-20	Machine	1.50	.56	.750	.38	.025	45090-S
		1.62	.56	.875	.38	.025	45091-S
		1.75	.56	1.000	.38	.025	45092-S
14-10	"A" Tapping	1.50	.56	.750	.38	.037	45093-S
		1.62	.56	.875	.38	.037	45094-S
		1.75	.56	1.000	.38	.037	45095-S

NOTES: For General Specifications See Page E-950.01. For Finishes See Addendum.
MATERIAL: Spring steel M-3420-A or M-3420-B.
USAGE: When fastening locations are grouped in pairs with hole centers (G) from 1/2 to 1 inch apart for sizes #6 to #10 inclusive and 3/4 inch to 1 inch apart for sizes 1/4 inch to #14 inclusive. When strength and speed of assembly are considerations or field servicing is involved the tapping screw pitches are recommended.

FORD MOTOR COMPANY
STANDARD PARTS

SPRING NUTS — FLAT LATCH TYPE

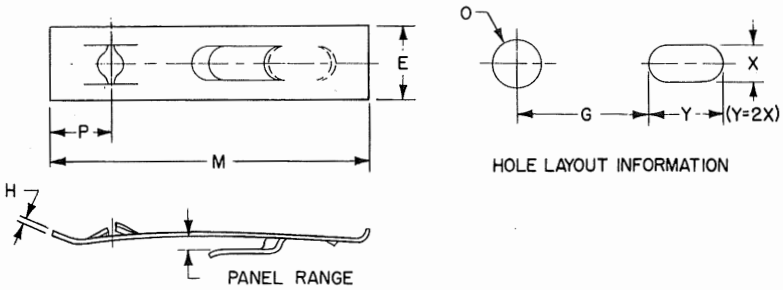

Screws Size	Screws Description	Panel Range	Ford Part Numbers	M	E	P	H	G	X	O
6-32	Machine	.025 to .040	45096-S	1.09	.31	.25	.017	.469	.12	3/16
		.045 to .062	45097-S							
6-18	"A" Tapping	.025 to .040	45098-S	1.09	.31	.25	.025	.469	.12	3/16
		.045 to .062	45099-S							
8-32	Machine	.025 to .040	45100-S	1.25	.38	.28	.017	.531	.16	7/32
		.045 to .062	45101-S							
8-15	"A" Tapping	.025 to .040	45102-S	1.25	.38	.28	.028	.531	.16	7/32
		.045 to .062	45103-S							
10-24	Machine	.025 to .040	45104-S	1.34	.44	.31	.022	.563	.19	1/4
		.045 to .062	45105-S							
10-12	"A" Tapping	.025 to .040	45106-S	1.36	.44	.31	.031	.563	.19	1/4
		.045 to .062	45107-S							
1/4-20	Machine	.028 to .056	45108-S	1.70	.56	.38	.025	.719	.25	5/16
		.060 to .087	45109-S							
14-10	"A" Tapping	.028 to .056	45110-S	1.72	.56	.38	.037	.719	.25	5/16
		.060 to .087	45111-S							

NOTES: For General Specifications See Page E-950.01. For Finishes See Addendum.
MATERIAL: Spring steel M-3420-A or M-3420-B.
USAGE: For fixed attachment when it is desirable to attach nut prior to final assembly. See "U" and "J" types for alternate fixed attachment. When strength and speed of assembly are considerations or field servicing is involved, the tapping screw pitches are recommended.

FORD MOTOR COMPANY
STANDARD PARTS

SPRING NUTS

"J" SHAPE

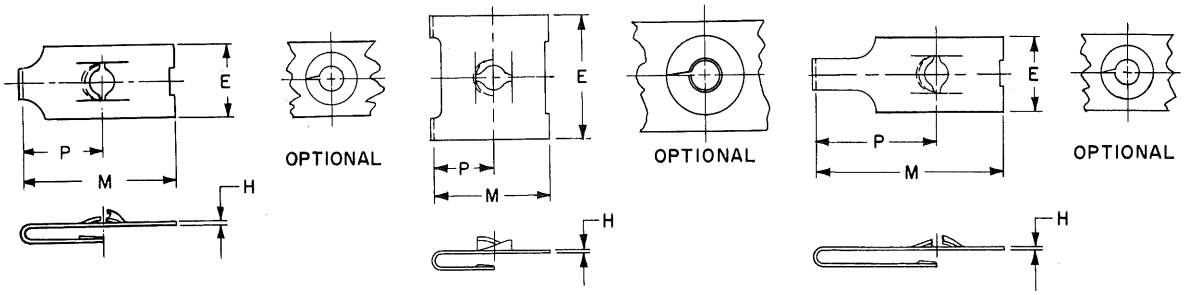

TYPE I
STANDARD

TYPE II
SHORT THROAT

TYPE III
LONG THROAT

Screw Size	Screw Description	Type	Panel Range	Ford Part Numbers	M	E	P	H
6–32	Machine	II	.025 to .040	45112-S	.47	.50	.26	.017
			.045 to .062	45113-S				
		I	.025 to .040	45114-S	.62	.31	.34	.017
			.045 to .062	45115-S				
		III	.025 to .040	45116-S	.81	.31	.52	.017
			.045 to .062	45117-S				
6–18	"A" Tapping	II	.025 to .040	45118-S	.47	.50	.26	.025
			.045 to .062	45119-S				
		I	.025 to .040	45120-S	.62	.31	.34	.025
			.045 to .062	45121-S				
		III	.025 to .040	45122-S	.81	.31	.52	.025
			.045 to .062	45123-S				
8–32	Machine	II	.025 to .040	45124-S	.53	.50	.28	.017
			.045 to .062	45125-S				
		I	.025 to .040	45126-S	.69	.41	.38	.017
			.045 to .062	45127-S				
		III	.025 to .040	45128-S	.88	.41	.56	.017
			.045 to .062	45129-S				
8–15	"A" Tapping	II	.025 to .040	45130-S	.52	.50	.26	.028
			.045 to .062	45131-S				
		I	.025 to .040	45132-S	.69	.41	.38	.028
			.045 to .062	45133-S				
		III	.025 to .040	45134-S	.84	.41	.56	.028
			.045 to .062	45135-S				
10–24	Machine	II	.025 to .040	45136-S	.59	.62	.31	.022
			.045 to .062	45137-S				
		I	.025 to .040	45138-S	.78	.38	.44	.022
			.045 to .062	45139-S				
		III	.025 to .040	45140-S	.97	.38	.62	.022
			.045 to .062	45141-S				
10–12	"A" Tapping	II	.025 to .040	45142-S	.58	.62	.31	.031
			.045 to .062	45143-S				
		I	.025 to .040	45144-S	.78	.50	.42	.031
			.045 to .062	45145-S				
		III	.025 to .040	45146-S	.97	.50	.62	.031
			.045 to .062	45147-S				
14–10	"A" Tapping	I	.028 to .056	45148-S	.91	.56	.50	.040
			.060 to .087	45149-S				
		III	.028 to .056	45150-S	1.16	.56	.75	.037
			.060 to .087	45151-S				
3/8–12	Cap Screw	I	.028 to .056	45152-S	1.23	.94	.62	.050
			.060 to .087	45153-S				
		III	.028 to .056	45154-S	1.41	.94	.78	.050
			.060 to .087	45155-S				

NOTES: For General Specifications See Page E-950.01. For Finishes See Addendum.
MATERIAL: Spring steel M-3420-A or M-3420-B.
APPLICATION: For blind attachment from front of panel. "J" shape should be specified unless "U" shape is required for full bearing surface. Coarse pitches are preferred for strength, speed of assembly and servicing.

FORD MOTOR COMPANY
STANDARD PARTS

SPRING NUTS

"U" SHAPE

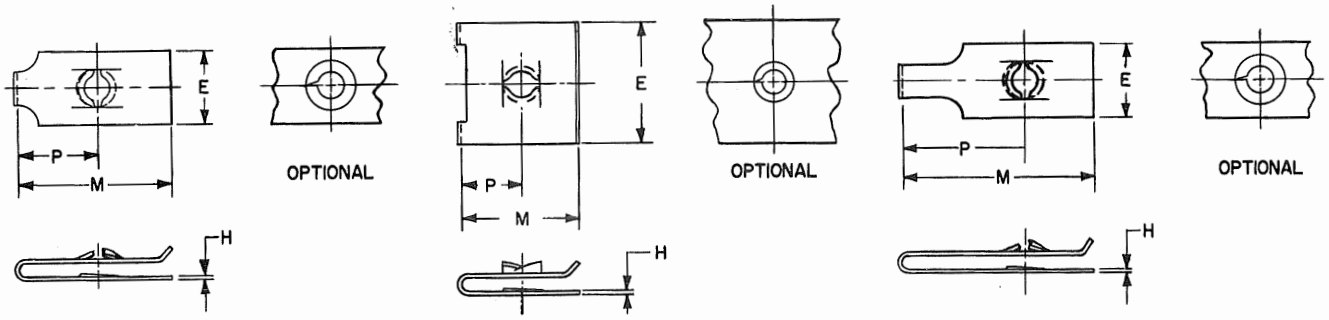

TYPE I STANDARD

TYPE II SHORT THROAT

TYPE III LONG THROAT

Screw Size	Screw Description	Type	Panel Range	Ford Part Numbers	M	E	P	H
6-32	Machine	II	.025 to .040	45156-S	.48	.50	.26	.017
			.045 to .062	45157-S				
		I	.025 to .040	45158-S	.66	.31	.34	.017
			.045 to .062	45159-S				
		III	.025 to .040	45160-S	.83	.31	.52	.017
			.045 to .062	45161-S				
6-18	"A" Tapping	II	.025 to .040	45162-S	.48	.50	.26	.025
			.045 to .062	45163-S				
		I	.025 to .040	45164-S	.66	.31	.34	.025
			.045 to .062	45165-S				
		III	.025 to .040	45166-S	.81	.31	.52	.025
			.045 to .062	45167-S				
8-32	Machine	II	.025 to .040	45168-S	.53	.50	.28	.017
			.045 to .062	45169-S				
		I	.025 to .040	45170-S	.69	.41	.38	.017
			.045 to .062	45171-S				
		III	.025 to .040	45172-S	.88	.41	.56	.017
			.045 to .062	45173-S				
8-15	"A" Tapping	II	.025 to .040	45174-S	.53	.50	.26	.028
			.045 to .062	45175-S				
		I	.025 to .040	45176-S	.69	.41	.38	.028
			.045 to .062	45177-S				
		III	.025 to .040	45178-S	.88	.41	.56	.028
			.045 to .062	45179-S				
10-24	Machine	II	.025 to .040	45180-S	.58	.62	.31	.022
			.045 to .062	45181-S				
		I	.025 to .040	45182-S	.76	.38	.44	.022
			.045 to .062	45183-S				
		III	.025 to .040	45184-S	.97	.38	.62	.022
			.045 to .062	45185-S				
10-12	"A" Tapping	II	.025 to .040	45186-S	.56	.62	.31	.031
			.045 to .062	45187-S				
		I	.025 to .040	45188-S	.78	.50	.42	.031
			.045 to .062	45189-S				
		III	.025 to .040	45190-S	.95	.50	.62	.031
			.045 to .062	45191-S				
14-10	"A" Tapping	I	.028 to .056	45192-S	.94	.56	.50	.037
			.060 to .087	45193-S				
		III	.028 to .056	45194-S	1.19	.56	.75	.037
			.060 to .087	45195-S				
3/8-12	Cap Screw	I	.028 to .056	45196-S	1.20	.94	.62	.050
			.060 to .087	45197-S				
		III	.028 to .056	45198-S	1.38	.94	.78	.050
			.060 to .087	45199-S				

NOTES: For General Specifications See Page E-950.01. For Finishes See Addendum.
MATERIAL: Spring steel M-3420-A or M-3420-B.
APPLICATION: For blind attachment from front of panel. "J" shape should be specified unless "U" shape is required for full bearing surface. Coarse pitches are preferred for strength, speed of assembly and servicing.

FORD MOTOR COMPANY
STANDARD PARTS

STAMPED NUTS

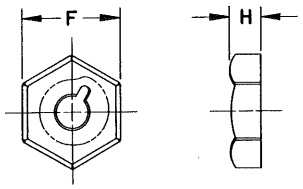

1-NOTCH

	Nominal Size	3	4
	Threads per Inch	48	40
F	Nominal Width	.188	.250
H	Nominal Thickness	.068	.076
	Ford Part Numbers	45200-S	45201-S

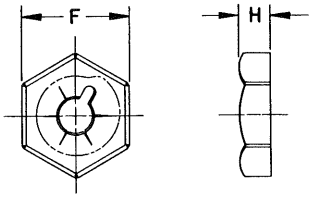

1-NOTCH 5-SLITS

	Nominal Size	6	8	10	10
	Threads per Inch	32	32	24	32
F	Nominal Width	.312	.344	.375	.375
H	Nominal Thickness	.093	.099	.105	.105
	Ford Part Numbers	45202-S	45203-S	45212-S	45204-S

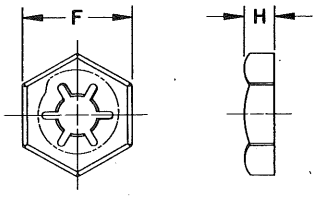

6-NOTCHES

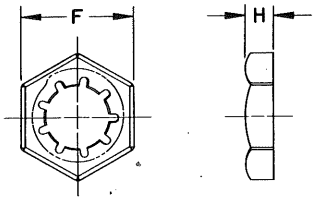

9-NOTCHES

6-NOTCHES

	Nominal Size	12	1/4	1/4	5/16	3/8	7/16	1/2	5/8	3/4	7/8	1
	Threads per Inch	24	20	28	18	16	14	13	11	10	9	8
F	Nominal Width	.438	.438	.438	.562	.625	.750	.812	1.000	1.125	1.312	1.625
H	Nominal Thickness	.118	.123	.118	.145	.156	.168	.190	.224	.246	.272	.336
	Ford Part Numbers	45205-S	45206-S	45207-S	45208-S	45209-S	45210-S	45211-S	45213-S	45214-S	45215-S	45216-S

9-NOTCHES

	Nominal Size	5/16	3/8	7/16	7/16	1/2	9/16	5/8	3/4	7/8	1
	Threads per Inch	24	24	20	28	20	18	18	16	14	14
F	Nominal Width	.500	.562	.625	.625	.750	.875	.938	1.062	1.250	1.438
H	Nominal Thickness	.129	.140	.150	.111	.172	.184	.203	.212	.256	.280
	Ford Part Numbers	45217-S	45218-S	45219-S	45248-S	45220-S	45221-S	45222-S	45223-S	45224-S	45225-S

Recommended Finish S7: For Stamped Nuts, S7 requirements are increased to 96 hours salt spray and .0002 inch minimum cadmium. For other Finishes see Section "Z" Addendum.

MATERIAL: M-3420-C Steel

Nuts must be free from burrs, loose scale, ragged edges or any other defects that might affect their serviceability.

For General Specifications see Page E-950.01.

FORD MOTOR COMPANY
STANDARD PARTS

STAMPED NUTS

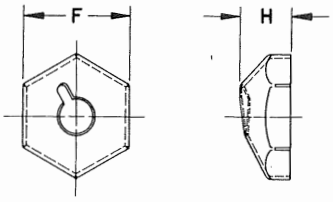

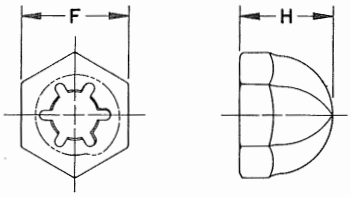

	Nominal Size	4	6	6	8	10	1/4
	Threads per Inch	40	32	32	32	24	20
F	Nominal Width	.250	.250	.312	.344	.375	.438
H	Nominal Thickness	.123	.116	.150	.156	.166	.180
	Ford Part Numbers	45226-S	45227-S	45228-S	45229-S	45241-S	45230-S

	Nominal Size	6	8	10	10	1/4	5/16
	Threads per Inch	32	32	24	32	20	18
F	Nominal Width	.312	.344	.375	.375	.438	.562
H	Nominal Thickness	.261	.297	.324	.324	.380	.484
	Ford Part Numbers	45236-S	45237-S	45244-S	45238-S	45239-S	45240-S

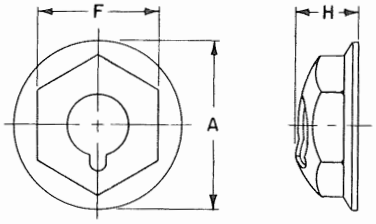

	Nominal Size	6	6	8	8	10	10	10	10	12	1/4	1/4
	Threads per Inch	32	32	32	32	24	24	24	32	24	20	20
F	Nominal Width	.312	.312	.344	.344	.375	.375	.375	.375	.375	.438	.438
H	Nominal Thickness	.204	.212	.212	.234	.231	.249	.267	.218	.230	.292	.261
A	Washer Diameter	.438	.531	.469	.625	.500	.625	.750	.500	.562	.812	.594
	Ford Part Numbers	45249-S	45250-S	45246-S	45253-S	45242-S	45254-S	45243-S	45232-S	45233-S	45234-S	45235-S

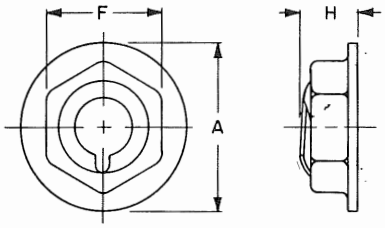

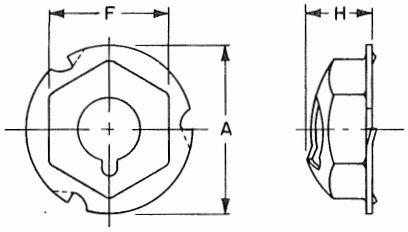

	Nominal Size	8	10	7/16
	Threads per Inch	32	32	20
F	Nominal Width	.344	.375	.625
H	Nominal Thickness	.159	.166	.195
A	Washer Diameter	.469	.500	.812
	Ford Part Numbers	45245-S	45231-S	45247-S

	Nominal Size	8	10	1/4
	Threads per Inch	32	24	20
F	Nominal Width	.344	.375	.438
H	Nominal Thickness	.202	.221	.248
A	Washer Diameter	.469	.500	.594
	Ford Part Numbers	45255-S	45251-S	45252-S

Recommended Finish S7: For Stamped Nuts, S7 requirements are increased to 96 hours salt spray and .0002 inch minimum cadmium (does not apply to inside of Crown Type Nut). For other Finishes see Section "Z" Addendum.

MATERIAL: M-3420-C Steel

Nuts must be free from burrs, loose scale, ragged edges or any other defects that might affect their serviceability.

For General Specifications see Page E-950.01.

FORD MOTOR COMPANY
STANDARD PARTS

WING NUTS — CLASS 2B

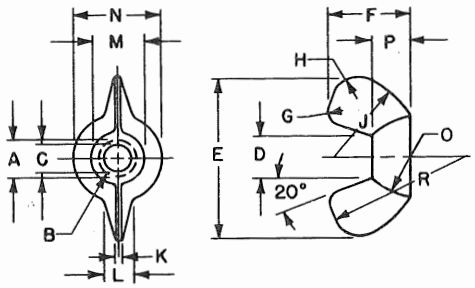

FORGED WING NUTS

	Nominal Size	8	10	10	12	1/4	5/16	3/8	7/16	1/2
B	Threads per Inch	32	24	32	24	20	18	16	14	13
A	Major Diameter Thread - Min.	.1640	.1900	.1900	.2160	.2500	.3125	.3750	.4375	.500
	Pitch Diameter	.1475 .1437	.1672 .1629	.1736 .1697	.1933 .1889	.2223 .2175	.2817 .2764	.3401 .3344	.3972 .3911	.4565 .4500
C	Minor Diameter Thread	.139 .130	.156 .145	.164 .156	.181 .171	.207 .196	.265 .252	.321 .307	.376 .360	.434 .417
D	Between Wings	.219	.219	.219	.281	.281	.312	.375	.500	.500
E	Wing Spread	.844	.844	.844	1.000	1.000	1.188	1.375	1.875	1.875
F	Wing Height	.406	.406	.406	.500	.500	.594	.719	.938	.938
G	Radius	.062	.062	.062	.062	.062	.094	.125	.125	.125
H	Radius	.125	.125	.125	.156	.156	.188	.250	.250	.250
J	Radius	.438	.438	.438	.562	.562	.625	.750	1.000	1.000
K	Wing Thickness	.031	.031	.031	.047	.047	.062	.094	.109	.109
L	Wing Thickness	.125	.125	.125	.156	.156	.188	.219	.250	.250
M	Boss Diameter	.250	.250	.250	.312	.312	.375	.438	.625	.625
N	Boss Diameter	.438	.438	.438	.500	.500	.562	.688	.906	.906
O	Radius	.312	.312	.312	.375	.375	.500	.688	.938	.938
P	Boss Height	.188	.188	.188	.219	.219	.250	.312	.375	.375
	Ford Part Numbers	33891-S	33892-S	33893-S	33894-S	33895-S	33896-S	33897-S	33898-S	33899-S

CLASS 2B MOD.

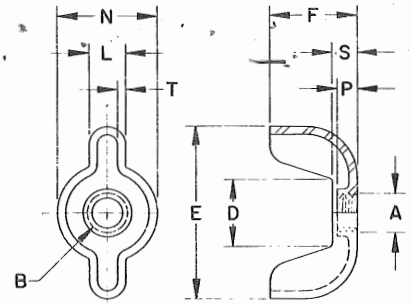

STAMPED STEEL WING NUTS

	Nominal Size		8	10	10	12	1/4	5/16	3/8
B	Threads per Inch		32	24	32	24	20	18	16
A	Major Diameter Thread - Min.		.1640	.1900	.1900	.2160	.2500	.3125	.3750
	Pitch Diameter		.1475 .1437	.1672 .1629	.1736 .1697	.1933 .1889	.2223 .2175	.2817 .2764	.3401 .3344
D	Between Wings	±.030	.250	.344	.344	.344	.344	.469	.688
E	Wing Spread	±.030	.750	.875	.875	1.062	1.062	1.281	1.375
F	Wing Height	±.030	.375	.438	.438	.469	.469	.562	.656
L	Wing Thickness	±.030	.156	.188	.188	.219	.219	.281	.312
N	Diameter	±.015	.370	.500	.500	.580	.580	.700	.790
P	Boss Height - Min.		.085	.100	.100	.115	.115	.140	.165
S	Base Wall Height	±.030	.125	.125	.125	.125	.125	.188	.188
T	Stock Thickness	±.005	.035	.038	.038	.038	.038	.060	.060
	Ford Part Numbers		33900-S	33901-S	33902-S	33903-S	33904-S	33905-S	33914-S

Recommended Finish: S8. For other Finishes see Section "Z" Addendum.
MATERIAL: Forged Type, SAE 1010 (M-2K2-A) Steel; Stamped Type, LCOH Steel.
For General Specifications see page E-950.01.

FORD MOTOR COMPANY
STANDARD PARTS

WING NUTS — CLASS 2B

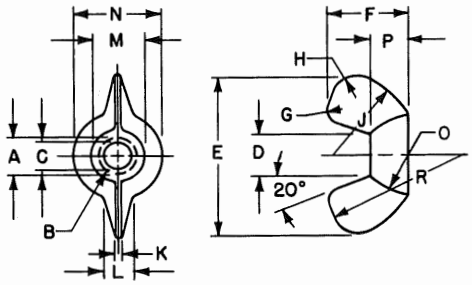

FORGED WING NUTS

	Nominal Size	8	10	10	12	1/4	5/16	3/8	7/16	1/2
B	Threads per Inch	32	24	32	24	20	18	16	14	13
A	Major Diameter Thread - Min.	.1640	.1900	.1900	.2160	.2500	.3125	.3750	.4375	.500
	Pitch Diameter	.1475 .1437	.1672 .1629	.1736 .1697	.1933 .1889	.2223 .2175	.2817 .2764	.3401 .3344	.3972 .3911	.4565 .4500
C	Minor Diameter Thread	.139 .130	.156 .145	.164 .156	.181 .171	.207 .196	.265 .252	.321 .307	.376 .360	.434 .417
D	Between Wings	.219	.219	.219	.281	.281	.312	.375	.500	.500
E	Wing Spread	.844	.844	.844	1.000	1.000	1.188	1.375	1.875	1.875
F	Wing Height	.406	.406	.406	.500	.500	.594	.719	.938	.938
G	Radius	.062	.062	.062	.062	.062	.094	.125	.125	.125
H	Radius	.125	.125	.125	.156	.156	.188	.250	.250	.250
J	Radius	.438	.438	.438	.562	.562	.625	.750	1.000	1.000
K	Wing Thickness	.031	.031	.031	.047	.047	.062	.094	.109	.109
L	Wing Thickness	.125	.125	.125	.156	.156	.188	.219	.250	.250
M	Boss Diameter	.250	.250	.250	.312	.312	.375	.438	.625	.625
N	Boss Diameter	.438	.438	.438	.500	.500	.562	.688	.906	.906
O	Radius	.312	.312	.312	.375	.375	.500	.688	.938	.938
P	Boss Height	.188	.188	.188	.219	.219	.250	.312	.375	.375
	Ford Part Numbers	33891-S	33892-S	33893-S	33894-S	33895-S	33896-S	33897-S	33898-S	33899-S

CLASS 2B MOD.

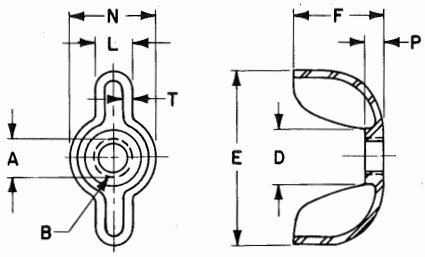

STAMPED STEEL WING NUTS

	Nominal Size	8	10	10	12	1/4	5/16	3/8
B	Threads per Inch	32	24	32	24	20	18	16
A	Major Diameter Thread - Min.	.1640	.1900	.1900	.2160	.2500	.3125	.3750
	Pitch Diameter	.1475 .1437	.1672 .1629	.1736 .1697	.1933 .1889	.2223 .2175	.2817 .2764	.3401 .3344
D	Between Wings	.250	.344	.344	.344	.438	.438	.500
E	Wing Spread	.750	.875	.875	1.062	1.281	1.281	1.375
F	Wing Height	.375	.438	.438	.469	.562	.562	.656
L	Wing Thickness	.156	.188	.188	.219	.281	.281	.312
N	Diameter	.37	.50	.50	.58	.70	.70	.81
P	Boss Height - Min.	.085	.100	.100	.115	.140	.140	.205
T	Stock Thickness	.035	.042	.042	.050	.072	.072	.072
	Ford Part Numbers	33900-S	33901-S	33902-S	33903-S	33904-S	33905-S	33914-S

NOTES: Forged Type: SAE 1010 (M-2K2-A) Steel
Stamped Type: LCOH Steel Class 2B MOD. Minor diameters may be increased up to the minimum pitch diameter.

GENERAL SPECIFICATIONS

HEXAGON, HEXAGON THICK, HEXAGON JAM, HEXAGON SLOTTED AND HEXAGON CASTLE AND SLOTTED NUTS

SIDE TAPER: The taper of sides of nuts (angle between one side and the axis) shall not exceed 2°, the specified width across flats being the largest dimension.

TOPS OF NUTS: The tops of nuts shall be flat with chamfered corners, and the diameter of the top circle shall be the maximum width across flats within a tolerance of minus 15% on washer faced nuts and within a tolerance of minus 5% on double chamfered nuts.

BEARING SURFACE: The bearing surface of nuts shall be flat, with either a washer face or chamfered corners and the diameter of the circle of the bearing surface shall be the maximum width across flats within a tolerance of minus 5%. The bearing surface shall be at right angles to the axis of the threaded hole within a tolerance of 2° for 5/8 inch nuts or smaller and within 1° for nuts over 5/8 inch. (The maximum total runout of bearing face equals the tangent of the specified angle times the width across flats.)

THREAD COUNTERSINK: The threaded hole shall be countersunk on the bearing surface to a diameter 1/64 inch over the major diameter of the thread for 1/2 inch nuts or smaller and 1/32 inch over the major diameter of the thread for nuts over 1/2 inch.

THREADS: Unified and American Standard, Class 2B.

HEXAGON AND SQUARE MACHINE SCREW NUTS

TOPS OF NUTS: Hexagon machine screw nuts shall have tops flat and chamfered. Diameter of the top circle shall be the maximum width across flats within a tolerance of minus 15%. Square machine screw nuts shall have tops flat without chamfer.

BEARING SURFACE: Hexagon machine screw nuts shall have flat bearing surfacesbut may be chamfered at manufacturers option. Square machine screw nuts shall have flat bearing surfaces without chamfer. The bearing surface of both types shall be at right angles to the axis of the threaded hole within a tolerance of 4°.

THREADS: Unified and American Standard, Class 2B.

SQUARE NUTS

SIDE TAPER: Taper of the sides of nuts (angle between one side and the axis) shall not exceed 2°, the specified width across flats being the largest dimension.

GENERAL SPECIFICATIONS

TOPS OF NUTS: The tops of nuts shall be flat and chamfered or washer crowned. Diameter of the top circle shall be the maximum width across flats within a tolerance of minus 15%.

BEARING SURFACE: The bearing surface shall be at right angles to the axis of the threaded hole within a tolerance of 3° for 1- inch nuts or smaller and 2° for nuts larger than 1- inch.

THREADS: Unified and American Standard, Class 2B.

HEXAGON LOCK NUTS (FREE RUNNING TYPE)

SIDE TAPER: The taper of sides of lock nuts (angle between one side and the axis) shall not exceed 2°, the specified width across flats being the largest dimension.

TOPS OF NUTS: The tops of lock nuts shall be flat with chamfered corners, and the diameter of the top circle shall be the maximum width across flats within a tolerance of minus 15%.

BEARING SURFACE: The bearing surface of lock nuts, except that portion containing the locking feature, shall be flat and at right angles to the axis of the threaded hole within 2° for 5/8 inch lock nuts or smaller and within 1° for lock nuts over 5/8 inch. (The maximum total run-out of the bearing face equals the tangent of the specified angle times the width across flats.)

THREAD COUNTERSINK: The threaded hole except as indicated in the dimensional tabulation shall be countersunk on the surface of the recess to a diameter 1/64 inch over the major diameter of the thread for 1/2 inch lock nuts or smaller and 1/32 inch over the major diameter of the thread for lock nuts over 1/2 inch.

SLOTS: At manufacturers option, slots may be across corners or across flats.

THREADS: Unified and American Standard, Class 2B.

HEXAGON LOCK NUTS (PREVAILING TORQUE TYPE)

SIDE TAPER: Except in the locking feature, taper of the sides of lock nuts (angle between one side and the axis) shall not exceed 2°, the specified width across flats being the largest dimension.

GENERAL SPECIFICATIONS

BEARING SURFACE: Bearing surface shall be flat. Chamfering of corners shall be optional. Diameter of the bearing surface shall be the maximum width across flats within a tolerance of minus 5%. The bearing surface shall be at right angles to the axis of the threaded hole within a tolerance of 2° for 5/8 inch lock nuts and smaller and 1° for lock nuts larger than 5/8 inch. (The maximum total runout of the bearing face equals the tangent of the specified angle times the distance across flats.)

THREAD COUNTERSINK: The tapped hole shall be countersunk 1/64 inch over the major diameter of the thread for lock nuts 1/2 inch and smaller and 1/32 inch for lock nuts larger than 1/2 inch.

SLOTS: The slots may be either across corners or across flats.

THREADS: Unified and American Standard, Class 2B except in locking area. Pitch diameters are included in the dimensional tabulations to show conformance to Unified Thread practices and do not imply that the lock nuts are to be inspected by a "go" thread plug gage. Reference to thread specifications are primarily to insure adequate starting on the comparable mating thread.

SAMPLING AND INSPECTION:
Lot: A lot shall consist of completed lock nuts which are of the same type, diameter and processing.

Axial Strength, Hardness, and Locking Ability: Four samples from each lot of lock nuts shall be tested for axial strength, hardness (Grade C only) and locking ability. Should any sample fail in a test, double the number of samples shall be tested, in which case all of the additional samples shall meet the specifications.

AXIAL STRENGTH: Lock nuts shall have the minimum axial strength as required in Table 1 for specified grade. See SAMPLING AND INSPECTION for specimen selection and inspection criteria.

Bolts of any desired length on which the lock nuts assemble freely up to the locking device with the fingers, may be used for this test. Bolts for test purposes shall have threads within the limits specified for Unified Standard Class 2A. Such bolts shall have a yield strength in excess of the specified minimum axial strength of the lock nuts. In case of controversy, a hardened and ground, threaded mandrel shall be substituted for the test bolt. The mandrel shall be heat treated to a minimum hardness of Rockwell C45 and shall be threaded to Unified Standard, Class 3A tolerance, except that the major diameter shall be the minimum major diameter with a plus tolerance of .002 inch.

GENERAL SPECIFICATIONS

TABLE 1 - AXIAL STRENGTH REQUIREMENTS

Nominal Size	Grade A		Grade B		Grade C	
	Coarse Thread	Fine Thread	Coarse Thread	Fine Thread	Coarse Thread	Fine Thread
1/4	2200	2500	3800	4350	4750	5450
5/16	3600	4000	6300	6950	7850	8700
3/8	5350	6050	9300	10550	11650	13150
7/16	7350	8200	12750	14250	15950	17800
1/2	9800	11050	17050	19200	21300	24000
9/16	11650	13000	21850	24350	27300	30450
5/8	14450	16400	27100	30700	33900	38400
3/4	21400	23850	40100	44750	50100	55950
7/8	25400	28000	53150	58550	69300	76350
1-	33350	36450	69700	76250	90900	99450

HARDNESS: Grade C lock nuts shall have a minimum Rockwell hardness of C26. The maximum Rockwell hardness shall not exceed C37, and if the hardness of electroplated lock nuts exceeds C32, lock nuts shall be suitably treated to avoid hydrogen embrittlement. See SAMPLING AND INSPECTION for specimen selection and inspection criteria.

The test when performed, shall be made on opposite polished surfaces of the nut face halfway between the thread and the hexagon corner or upon opposite hex faces or wrench faces one third the way from the hexagon corner to the center of the wrench face, provided accuracy of the hardness reading or thread size is not affected.

LOCKING ABILITY: The prevailing torque on first installation shall not exceed the maximum shown in Table 2. The breakaway torque shall be not less than that shown in Table 2 for first removal and fifth removal. (Breakaway torque is not to be confused with breakloose torque or the torque required to loosen a loaded lock nut.) See SAMPLING AND INSPECTION for specimen selection and inspection criteria.

The sample lock nut may be assembled by hand and tested on an undrilled test bolt. The bolt shall conform to SAE Grade 2, 5, or 8 for lock nuts of Grade A, B, and C respectively. The bolt thread shall be Class 2A. A new bolt shall be used for testing each lock nut. The bolt finish shall correspond to that of the lock nut.

GENERAL SPECIFICATIONS

The bolt may be lubricated with 520 Saybolt EP oil, or other suitable lubricant, to prevent chatter. The prevailing torque is the on-torque at first installation, read with no load on the bolt, with the lock nut in motion, and with the bolt protruding through the lock nut between two and three threads. Reverse torque shall then be applied to the lock nut and the breakaway torque is the torque required to start the lock nut in motion at a point such that the bolt protrudes between two and three threads through the lock nut. The breakaway torque is measured on the first removal and the fifth removal. The same lock nut and test bolt shall be used throughout the test for locking ability.

TABLE 2 - LOCKING ABILITY

Nominal Size	Prevailing Torque Lb.-In., Max.		Breakaway Torque Lb.-In., Min.			
			1st Removal		5th Removal	
	Grade A & B	Grade C	Grade A & B	Grade C	Grade A & B	Grade C
1/4	30	40	5.0	6.0	3.5	4.5
5/16	60	80	8.0	10.5	5.5	7.5
3/8	80	107	12	16	8.5	11.5
7/16	100	133	17	23	12	16
1/2	150	200	22	30	15	20
9/16	200	266	30	40	21	28
5/8	300	400	39	52	27	36
3/4	400	533	58	78	41	54
7/8	600	800	88	117	62	82
1-	800	1070	120	160	84	112

APPLICATION: It is recommended that grades of lock nuts be used with the bolt, stud or screw grades or materials shown in Table 3.

TABLE 3 - LOCK NUT APPLICATION

Lock Nut Grade	Bolt, Stud, or Screw Grade	
	SAE Bolt	Ford
A	0, 1 and 2	Steel - M-3500-A; M-3422-A; Brass - SAE 80-B.
B	3 and 5	Steel - M-3500-B; M-3500-C; M-3500-D; M-3500-E.
C	6, 7 and 8	M-3500-F; M-3500-G.

GENERAL SPECIFICATIONS

CROWN NUTS

SIDE TAPER: Except in the crown portion, the taper of sides of nuts (angle between one side and the axis) shall not exceed 2°, the specified width across flats being the largest dimension.

BEARING SURFACE: The bearing surface of nuts shall be flat with chamfered corners, and the diameter of the circle of bearing surface shall be the maximum width across flats within a tolerance of minus 5%. The bearing surface shall be at right angles to the axis of the threaded hole within 2° for 1- inch nuts or smaller and within 1° for nuts over 1- inch.

THREAD COUNTERSINK: The threaded hole shall be countersunk on bearing surfaces to a diameter 1/64 inch over the major diameter of the thread for 1/2 inch nuts or smaller and 1/32 inch over the major diameter of the thread for nuts over 1/2 inch.

THREADS: Unified and American Standard, Class 2A.

NUT AND WASHER ASSEMBLIES

SIDE TAPER: Taper of sides of nuts, sizes 1/4 through 3/8 (angle between one side and the axis) shall not exceed 2°, the specified width across flats being the largest dimension.

TOPS OF NUTS: Tops of nuts shall be flat with chamfered corners, and the diameter of the top circle shall be the maximum width across flats within a tolerance of minus 15%.

BEARING SURFACE: The bearing surface of nuts shall be flat and shall be at right angles to the axis of the threaded hole within 4° for 1/4 inch nuts and smaller (Machine Screw Series) and within 2° for nuts 1/4 inch and larger (Hexagon Nut Series).

THREAD COUNTERSINK: The threaded hole in nuts 1/4 inch to and including 1/2 inch (Hexagon Nut Series) shall be countersunk on the bearing surfaces to a diameter 1/64 inch over the major diameter of the thread. Diameter of the countersink for sizes greater than 1/2 inch shall be 1/32 inch over the major diameter of the thread.

THREADS: Unified and American Standard, Class 2B.

TOOTH LOCK WASHER: Dimensions of the tooth lock washer component of the assemblies are specified in the dimensional tabulations. They shall otherwise conform to the General Specifications for Tooth Lock Washers given in Section F except as noted below.

Availibility of washer design is limited to type shown in the illustration.

GENERAL SPECIFICATIONS

The washer shall be an integral part of the assembly and shall not disassemble during shipping or handling, but shall be free to rotate independently of the nut when by tightening the nut, the washer contacts the surface of the work.

CLINCH NUTS

BEARING SURFACE: The bearing surface of nuts shall be sufficiently flat to prevent rocking when placed on a surface plate. The surface shall be at right angles to the axis of the threaded hole within 2°.

THREAD COUNTERSINK: The threaded hole in nuts 1/4 inch to and including 1/2 inch shall be countersunk on bearing surfaces to a diameter 1/64 inch over the major diameter of the thread. Diameter of the countersink for sizes greater than 1/2 inch shall be 1/32 inch over the major diameter of the thread.

THREADS: Unified and American Standard, Class 2B.

TEE NUTS

DIMENSIONAL TOLERANCES: Tolerance on dimensions not otherwise specified shall be plus and minus .016 inch.

THREADS: Unified and American Standard, Class 2B MODIFIED. Due to the method of manufacture, minor diameters of tee nuts may be larger than those specified for Class 2B, but shall not exceed the minimum pitch diameter.

SPRING NUTS

BOSS: Size and formation of the boss and other detail shall be such as to assemble readily and function satisfactorily with the specified screw.

MATERIAL: Spring Steel M 3420-A or M-3420-B processed to meet the requirements of this specification.

HARDNESS: Hardness shall be as indicated in Table 4 except for the "optional" design shown in the illustration in which case the hardness shall be Rockwell C 38-45.

GENERAL SPECIFICATIONS

TABLE 4 - HARDNESS SPECIFICATIONS

Material Thickness	Rockwell Scale	Dial Reading	Conversion to Rockwell C Scale
Up to .016	15N	82.5 - 85.5	44 - 50
.017 - .024	30N	63.0 - 68.5	44 - 50
.025 - .039	45N	48.0 - 55.0	44 - 50
.040 and over	C	44 - 50	44 - 50

ASSEMBLY REQUIREMENTS: The "J" shape and "U" shape spring nuts covered in this standard shall preassemble onto panels within the thickness ranges specified in the dimensional tables and shall remain preassembled to the panels during final assembly operations.

STAMPED NUTS

MINIMUM DISTANCE ACROSS CORNERS: The minimum distance across corners of hexagons shall be 1.092 times the nominal width across flats, but shall not result in a side flat width of less than .43 times the nominal width across flats.

TOLERANCES: The tolerance on hexagon width shall be minus .010 inch for widths up to 1- inch and minus .015 inch for widths 1- inch and larger.

Unless otherwise specified, the tolerance on nut thickness shall be plus and minus .005 inch for thicknesses up to and including .079 inch; plus and minus .010 inch for thicknesses over .079 inch to .189 inch, inclusive; plus and minus .015 inch for thicknesses of .190 inch to .249 inch, inclusive; plus and minus .020 inch for thicknesses of .250 inch to .299 inch, inclusive; and plus and minus .025 inch for thicknesses over .300 inch.

WING NUTS

BEARING SURFACE: Forged wing nuts shall have the bearing surface at right angles to the axis of the threaded hole within 2°.

THREADS: Forged Wing Nuts - Unified and American Standard, Class 2B. Stamped Steel Wing Nuts - Unified and American Standard, Class 2B MODIFIED. Due to the method of manufacture of stamped nuts, minor diameters may be larger than those specified for Class 2B, but shall not exceed the minimum pitch diameter.

GENERAL SPECIFICATIONS

GENERAL

DIMENSIONS: All dimensions are in inches and apply to the finished product.

LIMITS: Allowable variation on dimensions controlling finished surfaces is plus or minus .010 inches unless otherwise specified.

DEFECTS: Parts must be free from burrs, loose scale, sharp edges and all other defects that might affect their serviceability.

TEE NUTS - RECOMMENDED HOLE SIZES

Screw Size	8	10	1/4		
Threads Per Inch	32	32	20		28
Barrel Diameter	.213 .208	.232 .227	.311 .306	.320 .315	.320 .315
Hole Diameter	.28	.30	.41	.42	.42
Drill Size	K	N	Z	27/64	27/64

Screw Size	5/16				3/8	
Threads Per Inch	18		24		16	24
Barrel Diameter	.366 .356	.391 .386	.375 .365	.400 .395	.471 .466	.485 .480
Hole Diameter	.50	.52	.50	.53	.62	.64
Drill Size	1/2	33/64	1/2	17/32	5/8	41/64

The specifications in this section were developed without considering whether patents may or may not be involved. In all cases, therefore, the supplier shall be required to assume patent liability.

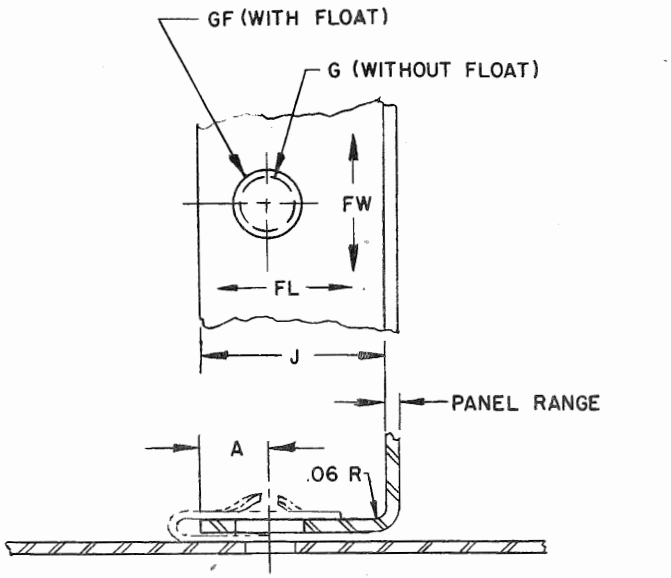
GF (WITH FLOAT)
G (WITHOUT FLOAT)
FW
FL
J
PANEL RANGE
A
.06 R

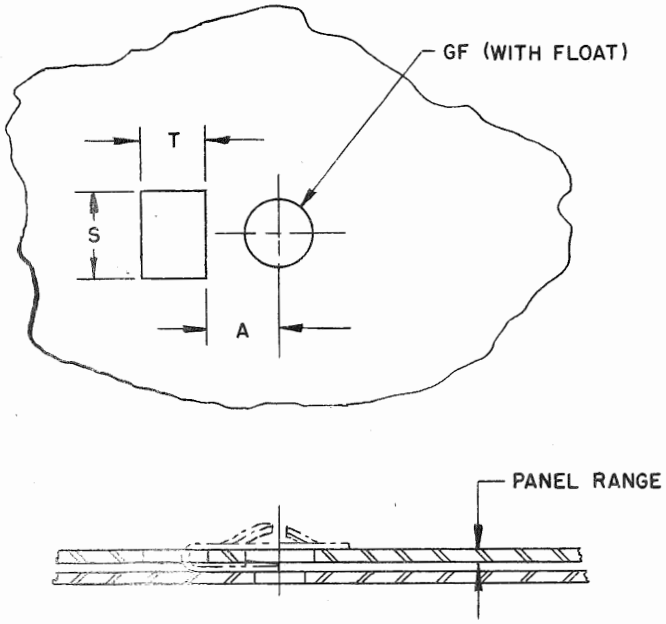
GF (WITH FLOAT)
T
S
A
PANEL RANGE

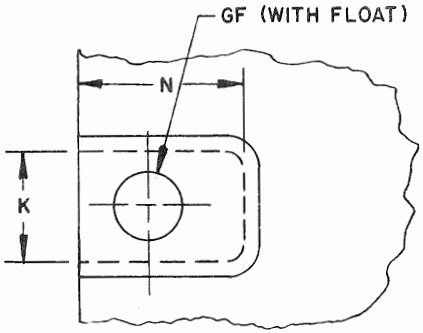
GF (WITH FLOAT)
N
K

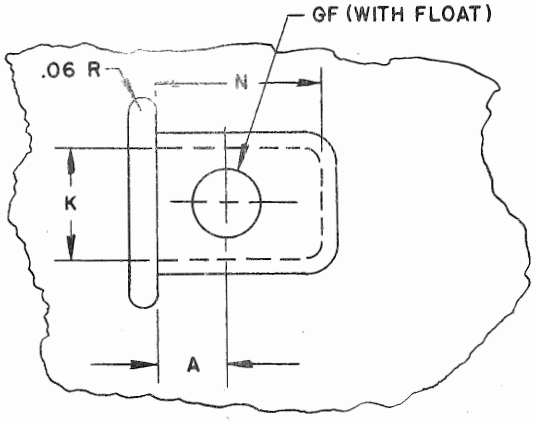
GF (WITH FLOAT)
.06 R
N
K
A

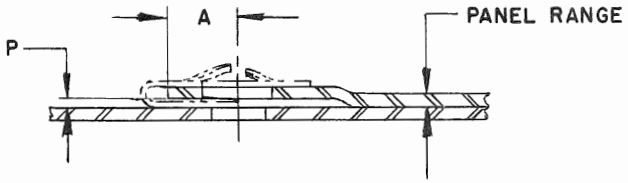
A
P
PANEL RANGE

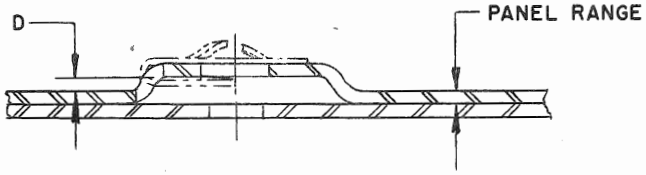
D
PANEL RANGE

FORD MOTOR COMPANY
STANDARD PARTS

SPRING NUTS-"J" SHAPE

ASSEMBLY INFORMATION

Screw Size	Screw Description	Type	Panel Range	A	GF	G	Float FW	Float FL	J Min.	K Min.	T	S	N	D Min.	P
6-32	Machine	II	.025 to .040 .045 to .062	.172	.25	.19	.09	.09	.500	.625	.22	.59	.50	.045	.025
		I	.025 to .040 .045 to .062	.250	.25	.19	.09	.09	.640	.562	.22	.56	.58	.045	.025
		III	.025 to .040 .045 to .062	.422	.25	.19	.09	.09	.828	.562	.22	.56	.77	.045	.025
6-18	"A" Tapping	II	.025 to .040 .045 to .062	.172	.25	.19	.08	.09	.500	.609	.22	.58	.50	.060	.030
		I	.025 to .040 .045 to .062	.250	.25	.19	.08	.09	.640	.562	.22	.56	.58	.060	.030
		III	.025 to .040 .045 to .062	.422	.25	.19	.08	.09	.828	.562	.22	.56	.77	.060	.030
8-32	Machine	II	.025 to .040 .045 to .062	.188	.28	.22	.08	.09	.578	.609	.25	.58	.58	.050	.030
		I	.025 to .040 .045 to .062	.281	.28	.22	.08	.09	.703	.562	.25	.56	.64	.050	.030
		III	.025 to .040 .045 to .062	.469	.28	.22	.08	.09	.890	.562	.25	.56	.83	.050	.030
8-15	"A" Tapping	II	.025 to .040 .045 to .062	.188	.28	.22	.08	.09	.578	.609	.25	.58	.58	.060	.033
		I	.025 to .040 .045 to .062	.281	.28	.22	.08	.09	.703	.562	.25	.56	.64	.065	.033
		III	.025 to .040 .045 to .062	.469	.28	.22	.08	.09	.890	.562	.25	.56	.83	.065	.033
10-24	Machine	II	.025 to .040 .045 to .062	.203	.31	.25	.08	.09	.625	.734	.31	.70	.62	.055	.030
		I	.025 to .040 .045 to .062	.312	.31	.25	.08	.09	.765	.625	.31	.62	.70	.055	.030
		III	.025 to .040 .045 to .062	.516	.31	.25	.08	.09	.968	.625	.31	.62	.91	.055	.030
10-12	"A" Tapping	II	.025 to .040 .045 to .062	.203	.31	.25	.08	.09	.625	.734	.31	.70	.62	.065	.036
		I	.025 to .040 .045 to .062	.312	.31	.25	.08	.09	.781	.625	.31	.62	.72	.065	.036
		III	.025 to .040 .045 to .062	.516	.31	.25	.08	.09	.968	.625	.31	.62	.91	.070	.036
14-10	"A" Tapping	I	.028 to .056 .060 to .087	.375	.38	.31	.09	.09	.890	.688	.44	.69	.83	.085	.042
		III	.028 to .056 .060 to .087	.625	.38	.31	.09	.09	1.140	.688	.44	.69	1.08	.085	.042
3/8-12	Cap Screw	I	.028 to .056 .060 to .087	.469	.56	.44	.12	.12	1.203	1.093	.56	.97	1.14	.105	.055
		III	.028 to .056 .060 to .087	.625	.56	.44	.12	.12	1.375	1.093	.56	.97	1.31	.105	.055

FORD MOTOR COMPANY

STANDARD PARTS

SPRING NUTS—"U" SHAPE

ASSEMBL

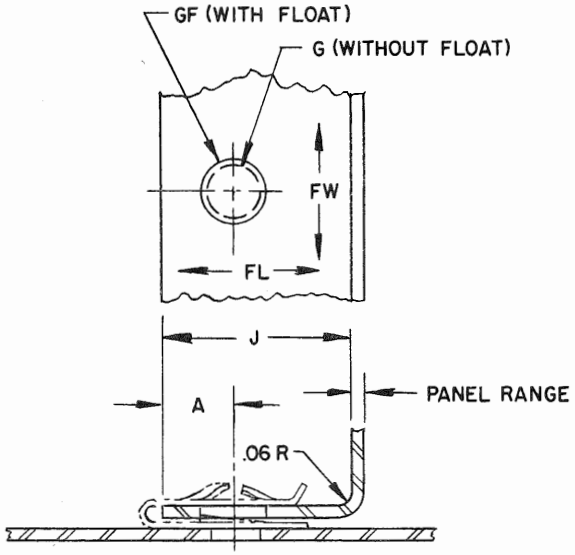

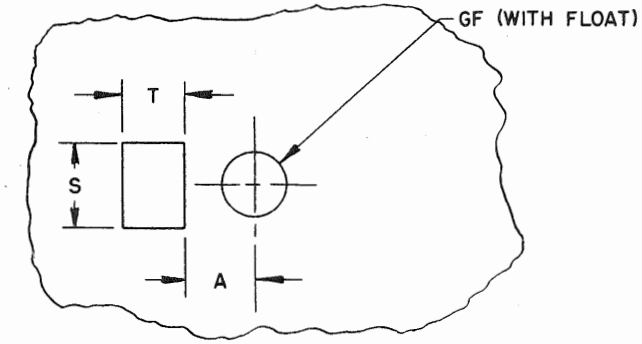

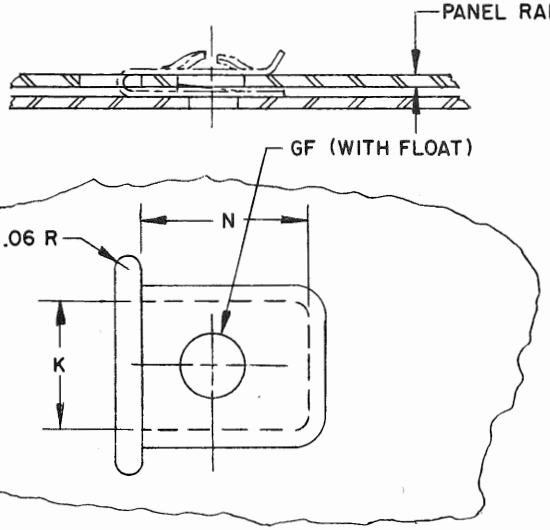

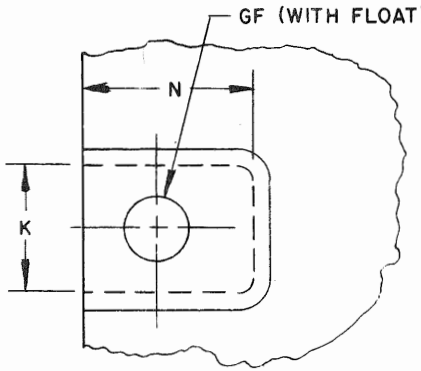

FORD MOTOR COMPANY
STANDARD PARTS
SPRING NUTS-"U" SHAPE
ASSEMBLY INFORMATION

Screw Size	Screw Description	Type	Panel Range	A	GF	G	Float FW	Float FL	J Min.	K Min.	T	S	N	D Min.	P
6-32	Machine	II	.025 to .040 .045 to .062	.172	.25	.19	.09	.09	.531	.625	.22	.59	.53	.045	.025
		I	.025 to .040 .045 to .062	.250	.25	.19	.09	.09	.609	.562	.22	.56	.61	.045	.025
		III	.025 to .040 .045 to .062	.422	.25	.19	.09	.09	.781	.562	.22	.56	.78	.045	.025
6-18	"A" Tapping	II	.025 to .040 .045 to .062	.172	.25	.19	.08	.09	.531	.609	.22	.58	.53	.060	.030
		I	.025 to .040 .045 to .062	.250	.25	.19	.08	.09	.609	.562	.22	.56	.61	.060	.030
		III	.025 to .040 .045 to .062	.422	.25	.19	.08	.09	.781	.562	.22	.56	.78	.060	.030
8-32	Machine	II	.025 to .040 .045 to .062	.188	.28	.22	.08	.09	.609	.609	.25	.58	.61	.050	.030
		I	.025 to .040 .045 to .062	.281	.28	.22	.08	.09	.671	.562	.25	.56	.67	.050	.030
		III	.025 to .040 .045 to .062	.469	.28	.22	.08	.09	.859	.562	.25	.56	.86	.050	.030
8-15	"A" Tapping	II	.025 to .040 .045 to .062	.188	.28	.22	.08	.09	.609	.609	.25	.58	.61	.060	.033
		I	.025 to .040 .045 to .062	.281	.28	.22	.08	.09	.671	.562	.25	.56	.67	.065	.033
		III	.025 to .040 .045 to .062	.469	.28	.22	.08	.09	.859	.562	.25	.56	.86	.065	.033
10-24	Machine	II	.025 to .040 .045 to .062	.203	.31	.25	.08	.09	.656	.734	.31	.70	.66	.055	.030
		I	.025 to .040 .045 to .062	.312	.31	.25	.08	.09	.718	.625	.31	.62	.72	.055	.030
		III	.025 to .040 .045 to .062	.516	.31	.25	.08	.09	.906	.625	.31	.62	.91	.055	.030
10-12	"A" Tapping	II	.025 to .040 .045 to .062	.203	.31	.25	.08	.09	.656	.734	.31	.70	.66	.065	.036
		I	.025 to .040 .045 to .062	.312	.31	.25	.08	.09	.718	.625	.31	.62	.72	.065	.036
		III	.025 to .040 .045 to .062	.516	.31	.25	.08	.09	.906	.625	.31	.62	.91	.060	.036
14-10	"A" Tapping	I	.028 to .056 .060 to .087	.375	.38	.31	.09	.09	.859	.688	.44	.69	.86	.080	.042
		III	.028 to .056 .060 to .087	.625	.38	.31	.09	.09	1.109	.688	.44	.69	1.11	.080	.042
3/8-12	Cap Screw	I	.028 to .056 .060 to .087	.469	.56	.44	.12	.12	1.109	1.093	.56	.97	1.11	.100	.055
		III	.028 to .056 .060 to .087	.625	.56	.44	.12	.12	1.265	1.093	.56	.97	1.26	.100	.055

FORD MOTOR COMPANY
STANDARD PARTS

SECTION F
WASHERS

FORD MOTOR COMPANY
STANDARD PARTS

FLAT WASHERS

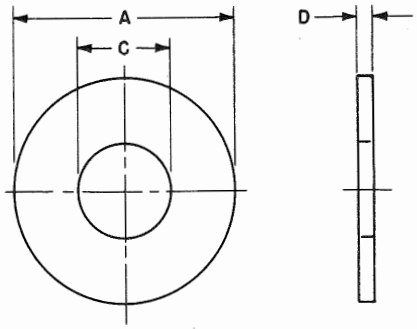

SIZE	C INSIDE DIAMETER	A OUTSIDE DIAMETER	D THICKNESS	FORD PART NUMBERS H.R.L.C.O.H. STEEL P & O	FORD PART NUMBERS SAE 70-A BRASS
#0	.083 - .073	.188	.025 - .016	44701-S	44801-S
#1	.099 - .089	.219	.025 - .016	44702-S	44802-S
#2	.099 - .089	.250	.025 - .016	44703-S	44803-S
#3	.130 - .120	.250	.028 - .017	44704-S	44804-S
#4	.130 - .120	.312	.040 - .025	44705-S	44805-S
#5	.161 - .151	.312	.048 - .027	44706-S	44806-S
#6	.161 - .151	.375	.065 - .036	44707-S	44807-S
#7	.177 - .167	.406	.065 - .036	44708-S	44808-S
#7	.193 - .183	.375	.065 - .036	44709-S	44809-S
#8	.193 - .183	.438	.065 - .036	44710-S	44810-S
#9	.208 - .198	.469	.065 - .036	44711-S	44811-S
#10	.224 - .214	.438	.065 - .036	44712-S	44812-S
#10	.224 - .214	.500	.065 - .036	44713-S	44813-S
#11	.244 - .224	.531	.065 - .036	44714-S	44814-S
#12	.260 - .240	.500	.065 - .036	44715-S	44815-S
#10	.255 - .245	.562	.065 - .036	44716-S	44816-S
#12	.255 - .245	.562	.080 - .051	44717-S	44817-S
#14	.276 - .256	.625	.065 - .036	44718-S	44818-S
1/4	.291 - .271	.625	.080 - .051	44719-S	44819-S
1/4	.322 - .302	.750	.080 - .051	44720-S	44820-S
#16	.322 - .302	.875	.080 - .051	44721-S	44821-S
5/16	.354 - .334	.688	.080 - .051	44722-S	44822-S
5/16	.385 - .365	.750	.080 - .051	44723-S	44823-S
5/16	.385 - .365	.875	.104 - .064	44724-S	44824-S
5/16	.385 - .365	1.125	.080 - .051	44725-S	44825-S
3/8	.416 - .396	.812	.080 - .051	44726-S	44826-S
3/8	.448 - .428	.875	.104 - .064	44727-S	44827-S
3/8	.448 - .428	1.000	.104 - .064	44728-S	44828-S
3/8	.448 - .428	1.375	.104 - .064	44729-S	44829-S
7/16	.479 - .459	.922	.080 - .051	44730-S	44830-S
7/16	.510 - .490	1.125	.104 - .064	44731-S	44831-S
7/16	.510 - .490	1.250	.104 - .064	44732-S	44832-S
7/16	.510 - .490	1.625	.104 - .064	44733-S	44833-S
1/2	.541 - .521	1.062	.121 - .074	44734-S	44834-S
1/2	.572 - .552	1.250	.132 - .086	44735-S	44835-S
1/2	.572 - .552	1.375	.132 - .086	44736-S	44836-S
1/2	.572 - .552	1.875	.132 - .086	44737-S	44837-S
9/16	.604 - .584	1.188	.121 - .074	44738-S	44838-S

SIZE	C INSIDE DIAMETER	A OUTSIDE DIAMETER	D THICKNESS	FORD PART NUMBERS H.R.L.C.O.H. STEEL P & O	FORD PART NUMBERS SAE 70-A BRASS
9/16	.635 - .615	1.375	.132 - .086	44739-S	44839-S
9/16	.635 - .615	1.500	.132 - .086	44740-S	44840-S
9/16	.635 - .615	2.125	.160 - .108	44741-S	44841-S
5/8	.666 - .646	1.312	.121 - .074	44742-S	44842-S
5/8	.698 - .678	1.500	.160 - .108	44743-S	44843-S
5/8	.698 - .678	1.750	.160 - .108	44744-S	44844-S
5/8	.698 - .678	2.375	.192 - .136	44745-S	44845-S
3/4	.822 - .802	1.500	.160 - .108	44746-S	44846-S
3/4	.822 - .802	1.750	.177 - .122	44747-S	44847-S
3/4	.822 - .802	2.000	.177 - .122	44748-S	44848-S
3/4	.822 - .802	2.875	.192 - .136	44749-S	44849-S
7/8	.948 - .928	1.750	.160 - .108	44750-S	44850-S
7/8	.948 - .928	2.000	.192 - .136	44751-S	44851-S
7/8	.948 - .928	2.250	.192 - .136	44752-S	44852-S
7/8	.948 - .928	3.375	.213 - .153	44753-S	44853-S
1	1.072 -1.052	2.000	.160 - .108	44754-S	44854-S
1	1.072 -1.052	2.250	.192 - .136	44755-S	44855-S
1	1.072 -1.052	2.500	.192 - .136	44756-S	44856-S
1	1.072 -1.052	3.875	.280 - .210	44757-S	44857-S
1-1/8	1.198 -1.178	2.500	.192 - .136	44758-S	44858-S
1-1/8	1.260 -1.240	2.750	.192 - .136	44759-S	44859-S
1-1/4	1.322 -1.302	2.750	.192 - .136	44760-S	44860-S
1-1/4	1.385 -1.365	3.000	.192 - .136	44761-S	44861-S
1-3/8	1.448 -1.428	3.000	.213 - .153	44762-S	44862-S
1-3/8	1.510 -1.490	3.250	.213 - .153	44763-S	44863-S
1-1/2	1.572 -1.552	3.250	.213 - .153	44764-S	44864-S
1-1/2	1.635 -1.615	3.500	.213 - .153	44765-S	44865-S
1-5/8	1.698 -1.678	3.500	.213 - .153	44766-S	44866-S
1-5/8	1.760 -1.740	3.750	.213 - .153	44767-S	44867-S
1-3/4	1.822 -1.802	3.750	.213 - .153	44768-S	44868-S
1-3/4	1.885 -1.865	4.000	.213 - .153	44769-S	44869-S
1-7/8	1.948 -1.928	4.000	.213 - .153	44770-S	44870-S
1-7/8	2.010 -1.990	4.250	.213 - .153	44771-S	44871-S
2	2.072 -2.052	4.250	.213 - .153	44772-S	44872-S
2	2.135 -2.115	4.500	.213 - .153	44773-S	44873-S
2-1/4	2.385 -2.365	4.750	.248 - .193	44774-S	44874-S
2-1/2	2.635 -2.615	5.000	.280 - .210	44775-S	44875-S
2-3/4	2.885 -2.865	5.250	.310 - .228	44776-S	44876-S

NOTES: For General Specifications See Page F-950.01. For Finishes See Addendum.
Washers must be free from burrs, loose scale, sharp edges and all other defects that might affect their serviceability.

FORD MOTOR COMPANY
STANDARD PARTS

SPRING LOCK WASHER
TRAPEZOIDAL

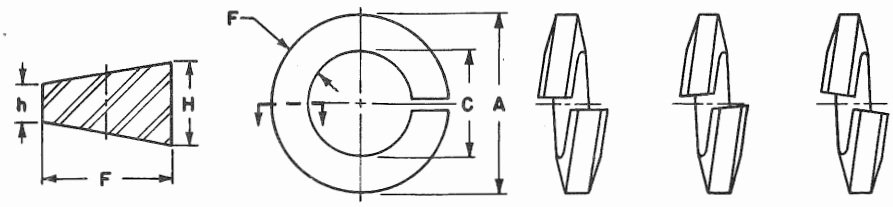

OPTIONAL

	MEDIUM	1/4	5/16	3/8	7/16	1/2	9/16	5/8	3/4	7/8	1
C	Inside Diameter	.255 .267	.319 .333	.382 .398	.446 .464	.509 .529	.573 .595	.636 .660	.763 .791	.890 .922	1.017 1.053
A	Outside Diameter Maximum	.493	.591	.688	.784	.879	.979	1.086	1.279	1.477	1.664
F	Width Minimum	.109	.125	.141	.156	.171	.188	.203	.234	.266	.297
H	Thickness I.D. Minimum	.075	.092	.110	.121	.145	.161	.177	.219	.247	.285
h	Thickness O.D. Minimum	.052	.068	.082	.091	.111	.125	.131	.171	.186	.225
	Ford Part Numbers	34780-S	34781-S	34782-S	34783-S	34784-S	34785-S	34786-S	34787-S	34788-S	34789-S

Recommended Finish: S35, S7. For other Finishes see Section "Z" Addendum.
When S7, S8, S8B, S39, S40 or S42 are specified, non-electrolytic coating by the P-97-B process may be used, providing minimum thicknesses, salt spray requirements, and material specified are met. In no case may the non-electrolytic plating thickness be less than .0002 inches.
MATERIAL: SAE 1060, SAE 1065, SAE 1070 Steel or equivalent hardened to R/C 45-53.
For General Specifications see page F-950.01.

FORD MOTOR COMPANY
STANDARD PARTS

SPRING LOCK WASHERS

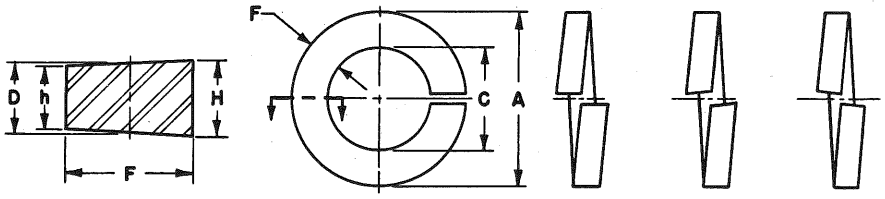

OPTIONAL

	LIGHT	#4	#6	#8	#10	#12	1/4	5/16	3/8	7/16	1/2
C	Inside Diameter (Min.)	.115	.141	.168	.194	.221	.255	.319	.382	.446	.509
	(Max.)	.124	.151	.178	.205	.232	.267	.333	.398	.464	.529
A	Outside Diameter (Max.)	.202	.237	.280	.323	.364	.489	.575	.678	.780	.877
F	Width (Min.)	.035	.040	.047	.055	.062	.107	.117	.136	.154	.170
D	Nominal Thickness	.020	.025	.031	.040	.047	.047	.056	.070	.085	.099
H-h	Increase in Thickness O.D. to I.D. (Max.)	.0022	.0026	.0030	.0036	.0040	.0068	.0074	.0088	.0098	.0108
	(Min.)	.0011	.0013	.0015	.0018	.0020	.0034	.0037	.0044	.0049	.0054
	Ford Part Numbers	34820-S	34821-S	34822-S	34823-S	34824-S	34825-S	34826-S	34827-S	34828-S	34829-S

	MEDIUM	#4	#6	#8	#10	#12	1/4	5/16	3/8	7/16	1/2
C	Inside Diameter (Min.)	.115	.141	.168	.194	.221	.255	.319	.382	.446	.509
	(Max.)	.124	.151	.178	.205	.232	.267	.333	.398	.464	.529
A	Outside Diameter (Max.)	.212	.251	.296	.337	.380	.493	.591	.688	.784	.879
F	Width (Min.)	.040	.047	.055	.062	.070	.109	.125	.141	.156	.171
D	Nominal Thickness	.025	.031	.040	.047	.056	.062	.078	.094	.109	.125
H-h	Increase in Thickness O.D. to I.D. (Max.)	.0026	.0030	.0035	.0040	.0044	.0070	.0080	.0090	.0100	.0110
	(Min.)	.0013	.0015	.0018	.0020	.0022	.0035	.0040	.0045	.0050	.0055
	Ford Part Numbers	34800-S	34801-S	34802-S	34803-S	34804-S	34805-S	34806-S	34807-S	34808-S	34809-S

	HEAVY	#4	#6	#8	#10	#12	1/4	5/16	3/8	7/16	1/2
C	Inside Diameter (Min.)	.115	.141	.168	.194	.221	.255	.319	.382	.446	.509
	(Max.)	.124	.151	.178	.205	.232	.267	.333	.398	.464	.529
A	Outside Diameter (Max.)	.226	.269	.310	.353	.394	.495	.601	.696	.792	.889
F	Width (Min.)	.047	.055	.062	.070	.077	.110	.130	.145	.160	.176
D	Nominal Thickness	.031	.040	.047	.056	.063	.077	.097	.115	.133	.151
H-h	Increase in Thickness O.D. to I.D. (Max.)	.0030	.0036	.0040	.0044	.0050	.0070	.0084	.0092	.0100	.0112
	(Min.)	.0015	.0018	.0020	.0022	.0025	.0035	.0042	.0046	.0050	.0056
	Ford Part Numbers	34840-S	34841-S	34842-S	34843-S	34844-S	34845-S	34846-S	34847-S	34848-S	34849-S

NOTES: For General Specifications See Page F-950.01. For Finishes See Addendum.
MATERIAL: SAE 1060, SAE 1065, SAE 1070 Steel or equivalent hardened to R/C 45-53.

FORD MOTOR COMPANY
STANDARD PARTS

SPRING LOCK WASHERS

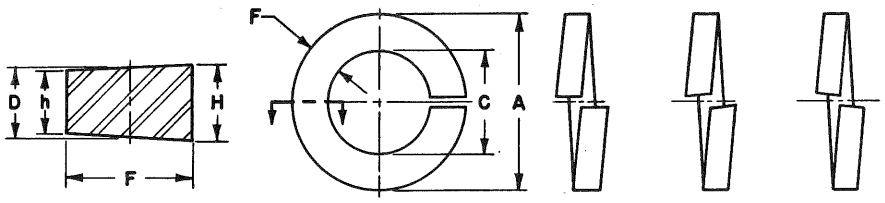

OPTIONAL

	LIGHT	9/16	5/8	11/16	3/4	7/8	1	1 1/8	1 1/4	1 3/8	1 1/2
C	Inside Diameter (Min.)	.573	.636	.700	.763	.890	1.017	1.144	1.271	1.398	1.525
	Inside Diameter (Max.)	.595	.660	.726	.791	.922	1.053	1.184	1.315	1.446	1.577
A	Outside Diameter (Max.)	.975	1.082	1.178	1.277	1.470	1.656	1.837	2.012	2.183	2.352
F	Width (Min.)	.186	.201	.216	.233	.264	.289	.314	.336	.356	.375
D	Nominal Thickness	.113	.126	.138	.153	.179	.202	.224	.224	.264	.282
H-h	Increase in Thickness O.D. to I.D. (Max.)	.0120	.0128	.0138	.0150	.0168	.0184	.0200	.0216	.0228	.0240
	Increase in Thickness O.D. to I.D. (Min.)	.0060	.0064	.0069	.0075	.0084	.0092	.0100	.0108	.0114	.0120
	Ford Part Numbers	34830-S	34831-S	34832-S	34833-S	34834-S	34835-S	34836-S	34837-S	34838-S	34839-S

	MEDIUM	9/16	5/8	11/16	3/4	7/8	1	1 1/8	1 1/4	1 3/8	1 1/2
C	Inside Diameter (Min.)	.573	.636	.700	.763	.890	1.017	1.144	1.271	1.398	1.525
	Inside Diameter (Max.)	.595	.660	.726	.791	.922	1.053	1.184	1.315	1.446	1.577
A	Outside Diameter (Max.)	.979	1.086	1.184	1.279	1.474	1.672	1.865	2.058	2.253	2.446
F	Width (Min.)	.188	.203	.219	.234	.266	.297	.328	.359	.391	.422
D	Nominal Thickness	.141	.156	.172	.188	.219	.250	.281	.312	.344	.375
H-h	Increase in Thickness O.D. to I.D. (Max.)	.0120	.0130	.0140	.0150	.0170	.0190	.0210	.0230	.0250	.0270
	Increase in Thickness O.D. to I.D. (Min.)	.0060	.0065	.0070	.0075	.0085	.0095	.0105	.0115	.0125	.0135
	Ford Part Numbers	34810-S	34811-S	34812-S	34813-S	34814-S	34815-S	34816-S	34817-S	34818-S	34819-S

	HEAVY	9/16	5/8	11/16	3/4	7/8	1	1 1/8	1 1/4	1 3/8	1 1/2
C	Inside Diameter (Min.)	.573	.636	.700	.763	.890	1.017	1.144	1.271	1.398	1.525
	Inside Diameter (Max.)	.595	.660	.726	.791	.922	1.053	1.184	1.315	1.446	1.577
A	Outside Diameter (Max.)	.989	1.100	1.200	1.299	1.504	1.716	1.921	2.126	2.325	2.518
F	Width (Min.)	.193	.210	.227	.244	.281	.319	.356	.393	.427	.458
D	Nominal Thickness	.170	.189	.207	.226	.266	.306	.345	.384	.422	.458
H-h	Increase in Thickness O.D. to I.D. (Max.)	.0124	.0134	.0146	.0156	.0180	.0204	.0228	.0252	.0274	.0294
	Increase in Thickness O.D. to I.D. (Min.)	.0062	.0067	.0073	.0078	.0090	.0102	.0114	.0126	.0137	.0147
	Ford Part Numbers	34850-S	34851-S	34852-S	34853-S	34854-S	34855-S	34856-S	34857-S	34858-S	34859-S

NOTES: For General Specifications See Page F-950.01. For Finishes See Addendum.
MATERIAL: SAE 1060, SAE 1065, SAE 1070 Steel or equivalent hardened to R/C 45-53.

FORD MOTOR COMPANY
STANDARD PARTS

TOOTH LOCK WASHERS

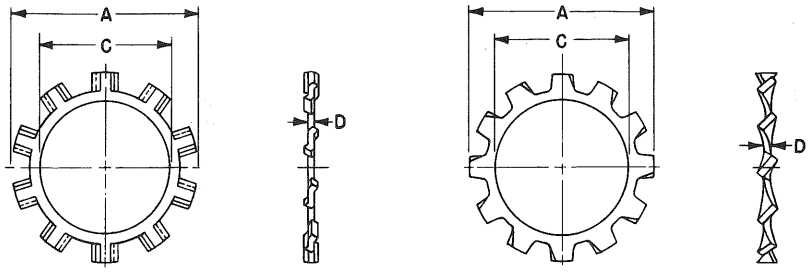

OPTIONAL

EXTERNAL

		# 4	# 6	# 8	# 10	# 12	1/4	5/16	3/8	7/16
A	Outside Diameter	.260 .245	.320 .305	.381 .365	.410 .395	.475 .460	.510 .494	.610 .588	.694 .670	.760 .740
C	Inside Diameter	.123 .115	.150 .141	.176 .168	.204 .195	.231 .221	.267 .256	.332 .220	.398 .384	.464 .448
D	Thickness	.019 .015	.021 .017	.023 .018	.025 .020	.025 .020	.028 .023	.034 .028	.040 .032	.040 .032
	Ford Part Numbers	34936-S	34937-S	34938-S	34939-S	34927-S	34940-S	34941-S	34942-S	34943-S

		1/2	9/16	5/8	11/16	3/4	7/8	1	1 1/8	1 1/4
A	Outside Diameter	.900 .880	.985 .960	1.070 1.045	1.155 1.130	1.260 1.220	1.410 1.380	1.620 1.590	1.830 1.800	1.930 1.900
C	Inside Diameter	.530 .513	.596 .576	.663 .641	.728 .704	.795 .768	.927 .897	1.060 1.025	1.192 1.153	1.385 1.355
D	Thickness	.045 .037	.045 .037	.050 .042	.050 .042	.055 .047	.060 .052	.067 .059	.065 .055	.078 .070
	Ford Part Numbers	34944-S	34945-S	34946-S	34928-S	34947-S	34948-S	34949-S	34929-S	34930-S

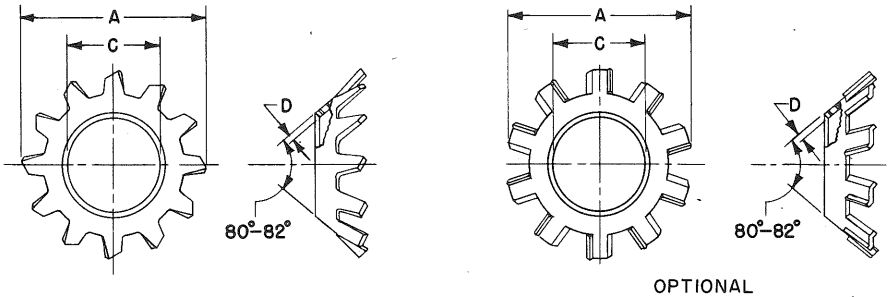

OPTIONAL

EXTERNAL-COUNTERSUNK

		# 6	# 8	# 10	# 12	1/4	# 16	5/16	3/8	7/16
A	Outside Diameter	.300 .285	.353 .337	.370 .353	.447 .429	.478 .458	.529 .509	.625 .603	.801 .776	.890 .863
C	Inside Diameter	.150 .140	.177 .167	.205 .195	.231 .220	.267 .255	.287 .273	.333 .318	.398 .383	.463 .448
D	Thickness	.021 .017	.021 .017	.025 .020	.025 .020	.025 .020	.028 .023	.028 .023	.034 .028	.045 .035
	Ford Part Numbers	34950-S	34951-S	34952-S	34953-S	34954-S	34955-S	34956-S	34957-S	34958-S

NOTES: For General Specifications See Page F-950.01. For Finishes See Addendum.
MATERIAL: SAE 1050, SAE 1060, SAE 1065 Steel or equivalent hardened to R/C 40-50.
Increase diameter of countersink of #6 thru 1/4 sizes by .047 and #16 thru 7/16 sizes by .063.

FORD MOTOR COMPANY
STANDARD PARTS

TOOTH LOCK WASHERS — INTERNAL

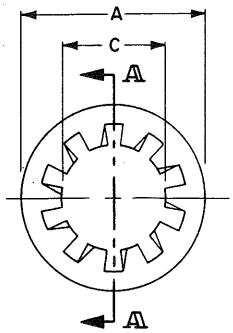

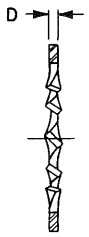

SECTION A-A

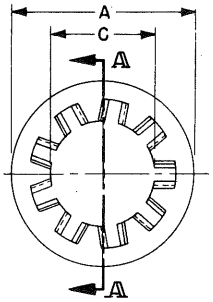

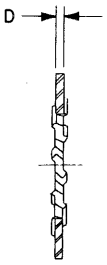

SECTION A-A

OPTIONAL

	REGULAR	#4	#6	#8	#10	#12	1/4	5/16	3/8	7/16
A	Outside Diameter	.270 .255	.295 .275	.340 .325	.381 .365	.410 .394	.478 .460	.610 .594	.692 .670	.789 .740
C	Inside Diameter	.123 .115	.150 .141	.176 .168	.204 .195	.231 .221	.267 .256	.332 .320	.398 .384	.464 .448
D	Thickness	.019 .015	.021 .017	.023 .018	.025 .020	.025 .020	.028 .023	.034 .028	.040 .032	.040 .032
	Ford Part Numbers	34900-S	34901-S	34902-S	34903-S	34904-S	34905-S	34906-S	34907-S	34908-S

		1/2	9/16	5/8	11/16	3/4	7/8	1	1 1/8	1 1/4
A	Outside Diameter	.900 .867	.985 .957	1.071 1.045	1.166 1.130	1.245 1.220	1.410 1.364	1.637 1.590	1.830 1.799	1.975 1.921
C	Inside Diameter	.530 .512	.596 .576	.663 .640	.728 .704	.795 .769	.927 .894	1.060 1.019	1.192 1.144	1.325 1.275
D	Thickness	.045 .037	.045 .037	.050 .042	.050 .042	.055 .047	.060 .052	.067 .059	.067 .059	.067 .059
	Ford Part Numbers	34909-S	34910-S	34911-S	34912-S	34913-S	34914-S	34915-S	34916-S	34917-S

	HEAVY	1/4	5/16	3/8	7/16	1/2	9/16	5/8	3/4	7/8
A	Outside Diameter	.536 .500	.607 .590	.748 .700	.858 .800	.924 .880	1.034 .990	1.135 1.100	1.265 1.240	1.447 1.400
C	Inside Diameter	.267 .256	.332 .320	.398 .384	.464 .448	.530 .512	.596 .576	.663 .640	.795 .768	.927 .894
D	Thickness	.045 .035	.050 .040	.050 .042	.067 .050	.067 .055	.067 .055	.067 .059	.084 .070	.084 .075
	Ford Part Numbers	34918-S	34919-S	34920-S	34921-S	34922-S	34923-S	34924-S	34925-S	34926-S

NOTES: For General Specifications See Page F-950.01. For Finishes See Addendum.
MATERIAL: SAE 1050, SAE 1060, SAE 1065 Steel or equivalent hardened to R/C 40-50.

FORD MOTOR COMPANY
STANDARD PARTS

FINISHING WASHERS

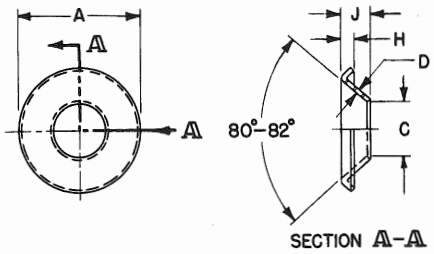

FLUSH COUNTERSUNK TYPE

		# 4	# 6	# 8	# 10	# 12	1/4
C	Diameter	.145 .135	.174 .166	.229 .219	.239 .229	.255 .245	.300 .290
A	Outside Diamater	.300 .290	.362 .352	.437 .427	.469 .459	.567 .557	.625 .615
J	Overall Height	.061 .051	.080 .070	.082 .072	.095 .085	.115 .105	.120 .110
H	Head Height	.030 .016	.030 .016	.036 .020	.040 .028	.044 .032	.050 .036
D	Stock Thickness	.015 .008	.015 .008	.018 .010	.020 .014	.022 .016	.025 .018
	Ford Numbers When Made From Type L.C.O.H. Steel	34860-S	34861-S	34862-S	34863-S	34864-S	34865-S
	Ford Numbers When Made From SAE 70-A Brass	34866-S	34867-S	34868-S	34869-S	34870-S	34871-S
	Ford Numbers When Made From SAE 51430 Rustless Steel	34961-S	34962-S	34963-S	34964-S	34965-S	34966-S

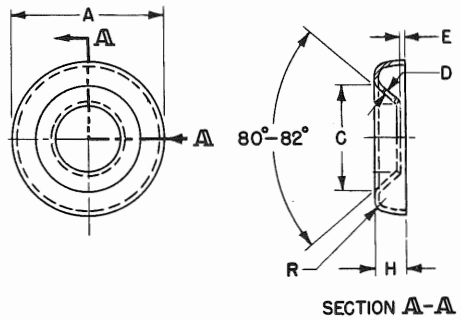

HOLLOW COUNTERSUNK TYPE

		# 4	# 6	# 8	# 10	# 12	1/4	5/16	3/8
C	Diameter	.247 .237	.303 .293	.357 .347	.437 .412	.470 .455	.546 .526	.678 .658	.810 .785
A	Outside Diameter	.385 .365	.448 .428	.541 .521	.603 .583	.697 .677	.791 .771	.947 .927	1.135 1.115
H	Thickness	.096 .076	.102 .082	.112 .092	.122 .102	.156 .136	.170 .150	.222 .202	.260 .240
E	Clearance, Minimum	.016	.016	.016	.016	.031	.031	.031	.031
R	Radius	.024	.028	.028	.036	.036	.036	.040	.050
D	Stock Thickness	.016 .008	.018 .010	.018 .010	.022 .014	.022 .014	.022 .014	.024 .016	.029 .021
	Ford Numbers When Made from Type L.C.O.H. Steel	34875-S	34876-S	34877-S	34878-S	34879-S	34880-S	34881-S	34882-S
	Ford Numbers When Made From SAE 70-A Brass	34883-S	34884-S	34885-S	34886-S	34887-S	34888-S	34889-S	34890-S
	Ford Numbers When Made From SAE 51430 Rustless Steel	34967-S	34968-S	34969-S	34970-S	34971-S	34972-S	34973-S	34974-S

NOTES: For Finishes See Addendum.
Washers must be free from burrs, loose scale, sharp edges and all other defects that might affect their serviceability.

GENERAL SPECIFICATIONS

FLAT WASHERS

TOLERANCES:
Inside Diameter: Inside diameters tabulated have been established on the following basis: for washers up to and including .219 inside diameter, the tolerance shall be plus or minus .005 inch; for inside diameters greater than .219 the tolerance shall be .010.

Outside Diameter: Tabulated values are nominal. The tolerance shall be plus or minus .010 for all sizes.

SPRING LOCK WASHERS

MATERIAL: Washers shall be made from SAE 1060, 1065 or 1070 carbon steel lock washer wire meeting the following limits for decarburization. See Table 1.

TABLE 1 - LIMITS FOR DECARBURIZATION

Diameter of Round Wire, or Sections of Equivalent Area	Maximum Depth of Free Ferrite	Maximum Total Affected Depth, (Free Ferrite Plus Partial Decarburization.)
Up to .140 Incl.	.002	.006
Over .140 to .250 Incl.	.003	.008
Over .250 to .375 Incl.	.004	.010
Over .375 to .500 Incl.	.006	.015

Washers shall be heat treated to a Rockwell hardness of 45-53 C scale, and ground to remove decarburization before testing hardness.

Plated washers shall be baked 4 hours at 400°F as soon as practicable after plating in order to relieve hydrogen or acid embrittlement. If washers so treated fail to meet the prescribed tests, the baking time and/or the temperature shall be increased.

WASHER SECTION:
Standard Washers: The section of finished standard washers shall be slightly trapezoidal in shape with the thickness at the inner periphery greater than the thickness at the outer periphery by an amount varying from a minimum of .0005 inch to a maximum .001 inch per .0156 (1/64) inch of the minimum section width. The minimum thickness (D) specified in the table of dimensions represents the nominal mean thickness of the trapezoid. The tolerance on the nominal mean thickness of the trapezoid shall be plus and equal to the following:

Size No. 12 and smaller.	.006
Size 1/4 to 13/16.	.010
Size 7/8 to 1-1/2.	.020

GENERAL SPECIFICATIONS

Reduced to formulas, the increase in thickness from the outer periphery to the inner periphery is H minus h or .032 F (minimum) to .064 F (maximum), where H is the thickness at the inside diameter, h is the thickness at the outside diameter and F is the section width.

Trapezoidal Washers: The section of the trapezoidal washer has a more pronounced difference in the thickness between the inner and outer periphery than the standard washer. Dimensions shown in charted specifications govern shape and size; otherwise, features are similar to the standard washer.

COILING: Washers shall be coiled so that free height is approximately twice the thickness of washer section. Gap and relationship of severed ends shall be such as to prevent washers tangling and insure that the washers will compress flat.

TEMPER TEST: After compressing to flat and releasing, the free height of a washer shall be at least two-thirds of the original free height.

TWIST TEST: A portion of the washer shall be firmly gripped by a vise and a wrench so that equal portions of the washer are in each with a space as specified in Table 2 existing between the vise and the wrench. The axis through the slot of the washer shall be parallel to the top of the vise. Both wrench and vise shall have flat, sharp edged jaws.

TABLE 2 - CLEARANCE BETWEEN WRENCH AND GRIP OF VISE

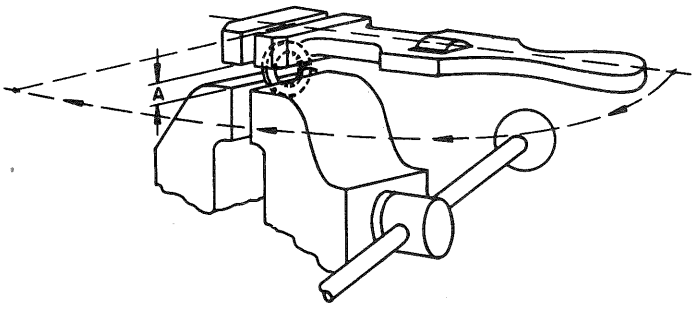

NOMINAL WASHER SIZE	DIMENSION A
No. 4, 6, 8	1/16
No. 10, 12	3/32
1/4, 5/16	1/8
3/8, 7/16	3/16
1/2, 9/16, 5/8	1/4
11/16, 3/4	5/16
7/8	3/8
1-	7/16
1-1/8	15/32
1-1/4	1/2
1-3/8	9/16
1-1/2	5/8

Movement of the wrench in a direction that increases the free heigth of the spring lock washer shall twist carbon steel washers through an angle of 90° and stainless steel and nonferrous washers through an angle of 45° without sign of fracture. When a washer fractures at

GENERAL SPECIFICATIONS

a greater degree of twist, the structure at the point of fracture shall show a fine grain, and the washer up to the instant of fracture shall deliver a tough, springy reaction.

REFEREE CLAMPING TEST FOR PLATED WASHERS: The clamping test consists of compressing 100 samples of each batch between hardened and ground steel plates. The washers are to be held compressed for one minute and then inspected. If no washers are broken, they should again be clamped for three hours and reinspected and if no washers are broken, should be compressed a third time for sixteen hours or longer.

DEFECTS: The flat faces of washers and the inner and outer peripheries shall be smooth and free from knurling, serrations, die marks, deep scratches, etc., although slight feed roll marks are permissible.

TOOTH LOCK WASHERS

MATERIAL: Carbon Steel - SAE 1050, 1060 or 1065; fabricated and heat treated to a Rockwell hardness of 40-50 C scale or equivalent. It is recommended, however, that the lighter, more sensitive depth reading Rockwell A scale be used when testing washers of thin section. Decarburization shall be removed before testing hardness.

Plated washers shall be baked four hours at 400°F as soon as practicable after plating in order to relieve hydrogen or acid embrittlement. If washers so treated fail to meet the prescribed tests, the baking time and/or the temperature shall be increased.

OPTIONAL TYPES: Tooth lock washers are available in the two distinct types shown in the illustrations as optional under a single series of part numbers. Should control of the type procured be essential, approved source may be specified on the release.

MANUFACTURING DETAIL: The number of teeth, the length of the teeth, the width of the rim and the thickness of the washer over the teeth (free height) shall be optional with the manufacturer, with the provision, however, that the projection of the teeth on both sides of the washer shall be uniform within a tolerance equal to one-half of the projection on one side. Washers shall be symmetrical in shape.

TEMPER TEST: Washers shall be set down or deflected a distance equivalent to one-third turn of a coarse thread nut of corresponding size. The free height of the washer on release, shall be at least five-sixths of the original free height.

SPREAD TEST: When the free ends of a severed washer are separated in the form of a helix, by an amount equal to the inside diameter of the washer, there shall be no fracture. When the ends are separated a greater distance and the washer fractures, the fracture shall show a

GENERAL SPECIFICATIONS

fine grain, and the washer up to the instant of fracture shall deliver a tough springy reaction.

GENERAL

DIMENSIONS: All dimensions are in inches and apply to the finished product.

LIMITS: Allowable variation on dimensions controlling finished surfaces is plus or minus .010 inch unless otherwise specified.

DEFECTS: Washers shall be free from burrs, seams, laps, loose scale, irregular surfaces, sharp edges, brittleness, etc., that affect their serviceability.

The specifications in this section were developed without considering whether patents may or may not be involved. In all cases therefore, the supplier shall be required to assume patent liability.

SECTION G

RIVETS

FORD MOTOR COMPANY
STANDARD PARTS

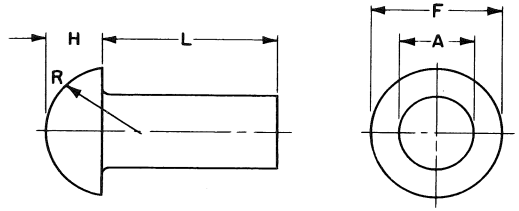

		1/16	3/32	1/8	5/32	3/16	7/32	1/4	9/32	5/16	11/32	3/8	7/16	1/2	9/16	5/8
A	Body Diameter	.065 .060	.096 .090	.127 .121	.158 .152	.191 .182	.222 .213	.253 .244	.285 .273	.317 .305	.348 .336	.380 .365	.443 .428	.520 .478	.592 .538	.655 .600
F	Head Diameter	.122 .102	.182 .162	.235 .215	.290 .268	.348 .322	.405 .379	.460 .430	.518 .484	.572 .538	.630 .592	.684 .646	.798 .754	.938 .844	1.047 .953	1.157 1.063
H	Head Thickness	.052 .042	.077 .065	.100 .088	.124 .110	.147 .133	.172 .158	.196 .180	.220 .202	.243 .225	.267 .247	.291 .271	.339 .317	.406 .375	.453 .422	.500 .469
R	Radius (approx.)	.055	.084	.111	.138	.166	.195	.221	.249	.276	.304	.332	.387	.442	.497	.553

FORD PART NUMBERS

L LENGTH	1/16	3/32	1/8	5/32	3/16	7/32	1/4	9/32	5/16	11/32	3/8	7/16	1/2	9/16	5/8
1/8 3/16 1/4	60300-S 60303-S 60308-S	60301-S 60304-S 60309-S	60302-S 60305-S 60310-S	60306-S 60311-S	60307-S 60312-S	60313-S	60314-S								
5/16 3/8 7/16 1/2	60315-S 60326-S 60339-S 60352-S	60316-S 60327-S 60340-S 60353-S	60317-S 60328-S 60341-S 60354-S	60318-S 60329-S 60342-S 60355-S	60319-S 60330-S 60343-S 60356-S	60320-S 60331-S 60344-S 60357-S	60321-S 60332-S 60345-S 60358-S	60322-S 60333-S 60346-S 60359-S	60323-S 60334-S 60347-S 60360-S	60324-S 60335-S 60348-S 60361-S	60325-S 60336-S 60349-S 60362-S	60337-S 60350-S 60363-S	60338-S 60351-S 60364-S		
9/16 5/8 11/16 3/4	60365-S 60380-S	60366-S 60381-S 60395-S 60409-S	60367-S 60382-S 60396-S 60410-S	60368-S 60383-S 60397-S 60411-S	60369-S 60384-S 60398-S 60412-S	60370-S 60385-S 60399-S 60413-S	60371-S 60386-S 60400-S 60414-S	60372-S 60387-S 60401-S 60415-S	60373-S 60388-S 60402-S 60416-S	60374-S 60389-S 60403-S 60417-S	60375-S 60390-S 60404-S 60418-S	60376-S 60391-S 60405-S 60419-S	60377-S 60392-S 60406-S 60420-S	60378-S 60393-S 60407-S 60421-S	60379-S 60394-S 60408-S 60422-S
13/16 7/8 15/16 1		60423-S 60437-S	60424-S 60438-S 60451-S 60464-S	60425-S 60439-S 60452-S 60465-S	60426-S 60440-S 60453-S 60466-S	60427-S 60441-S 60454-S 60467-S	60428-S 60442-S 60455-S 60468-S	60429-S 60443-S 60456-S 60469-S	60430-S 60444-S 60457-S 60470-S	60431-S 60445-S 60458-S 60471-S	60432-S 60446-S 60459-S 60472-S	60433-S 60447-S 60460-S 60473-S	60434-S 60448-S 60461-S 60474-S	60435-S 60449-S 60462-S 60475-S	60436-S 60450-S 60463-S 60476-S
1 1/16 1 1/8 1 3/16 1 1/4			60477-S 60490-S	60478-S 60491-S 60503-S 60515-S	60479-S 60492-S 60504-S 60516-S	60480-S 60493-S 60505-S 60517-S	60481-S 60494-S 60506-S 60518-S	60482-S 60495-S 60507-S 60519-S	60483-S 60496-S 60508-S 60520-S	60484-S 60497-S 60509-S 60521-S	60485-S 60498-S 60510-S 60522-S	60486-S 60499-S 60511-S 60523-S	60487-S 60500-S 60512-S 60524-S	60488-S 60501-S 60513-S 60525-S	60489-S 60502-S 60514-S 60526-S
1 3/8 1 1/2 1 5/8 1 3/4				60527-S 60539-S	60528-S 60540-S 60551-S 60562-S	60529-S 60541-S 60552-S 60563-S	60530-S 60542-S 60553-S 60564-S	60531-S 60543-S 60554-S 60565-S	60532-S 60544-S 60555-S 60566-S	60533-S 60545-S 60556-S 60567-S	60534-S 60546-S 60557-S 60568-S	60535-S 60547-S 60558-S 60569-S	60536-S 60548-S 60559-S 60570-S	60537-S 60549-S 60560-S 60571-S	60538-S 60550-S 60561-S 60572-S
1 7/8 2 2 1/8 2 1/4					60573-S 60584-S	60574-S 60585-S 60595-S 60605-S	60575-S 60586-S 60596-S 60606-S	60576-S 60587-S 60597-S 60607-S	60577-S 60588-S 60598-S 60608-S	60578-S 60589-S 60599-S 60609-S	60579-S 60590-S 60600-S 60610-S	60580-S 60591-S 60601-S 60611-S	60581-S 60592-S 60602-S 60612-S	60582-S 60593-S 60603-S 60613-S	60583-S 60594-S 60604-S 60614-S

NOTES:

For General Specifications see Page G-950.01. For Finishes see Addendum.
MATERIAL: M-1A14 Steel.

FORD MOTOR COMPANY
STANDARD PARTS

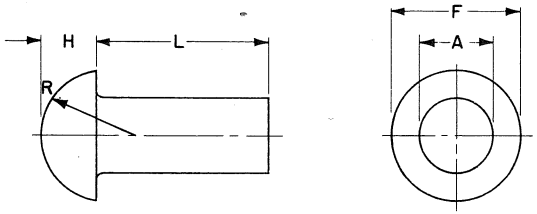

		1/16	3/32	1/8	5/32	3/16	7/32	1/4	9/32	5/16	11/32	3/8	7/16	1/2	9/16	5/8
A	Body Diameter	.065 .060	.096 .090	.127 .121	.158 .152	.191 .182	.222 .213	.253 .244	.285 .273	.317 .305	.348 .336	.380 .365	.443 .428	.520 .478	.592 .538	.655 .600
F	Head Diameter	.122 .102	.182 .162	.235 .215	.290 .268	.348 .322	.405 .379	.460 .430	.518 .484	.572 .538	.630 .592	.684 .646	.798 .754	.938 .844	1.047 .953	1.157 1.063
H	Head Thickness	.052 .042	.077 .065	.100 .088	.124 .110	.147 .133	.172 .158	.196 .180	.220 .202	.243 .225	.267 .247	.291 .271	.339 .317	.406 .375	.453 .422	.500 .469
R	Radius (approx.)	.055	.084	.111	.138	.166	.195	.221	.249	.276	.304	.332	.387	.442	.497	.553

L Length — FORD PART NUMBERS — MATERIAL: M-1A14 Steel

Length	1/16	3/32	1/8	5/32	3/16	7/32	1/4	9/32	5/16	11/32	3/8	7/16	1/2	9/16	5/8
2 3/8 2 1/2 2 5/8 2 3/4						60615-S 60625-S 60635-S 60645-S	60616-S 60626-S 60636-S 60646-S	60617-S 60627-S 60637-S 60647-S	60618-S 60628-S 60638-S 60648-S	60619-S 60629-S 60639-S 60649-S	60620-S 60630-S 60640-S 60650-S	60621-S 60631-S 60641-S 60651-S	60622-S 60632-S 60642-S 60652-S	60623-S 60633-S 60643-S 60653-S	60624-S 60634-S 60644-S 60654-S
2 7/8 3 3 1/4 3 1/2						60655-S 60665-S 60675-S 60685-S	60656-S 60666-S 60676-S 60686-S	60657-S 60667-S 60677-S 60687-S	60658-S 60668-S 60678-S 60688-S	60659-S 60669-S 60679-S 60689-S	60660-S 60670-S 60680-S 60690-S	60661-S 60671-S 60681-S 60691-S	60662-S 60672-S 60682-S 60692-S	60663-S 60673-S 60683-S 60693-S	60664-S 60674-S 60684-S 60694-S
3 3/4 4 4 1/4 4 1/2						60695-S 60705-S 60715-S 60725-S	60696-S 60706-S 60716-S 60726-S	60697-S 60707-S 60717-S 60727-S	60698-S 60708-S 60718-S 60728-S	60699-S 60709-S 60719-S 60729-S	60700-S 60710-S 60720-S 60730-S	60701-S 60711-S 60721-S 60731-S	60702-S 60712-S 60722-S 60733-S	60703-S 60713-S 60723-S 60733-S	60704-S 60714-S 60724-S 60734-S

Length — FORD PART NUMBERS — MATERIAL: SAE-72 Brass

Length	1/16	3/32	1/8	5/32	3/16	7/32	1/4	9/32	5/16	11/32	3/8	7/16	1/2	9/16	5/8
1/8 3/16 1/4 5/16	60775-S 60778-S 60783-S 60790-S	60776-S 60779-S 60784-S 60791-S	60777-S 60780-S 60785-S 60792-S	60781-S 60786-S 60793-S	60782-S 60787-S 60794-S	60788-S 60795-S	60789-S 60796-S	60797-S	60798-S						
3/8 7/16 1/2 9/16	60799-S 60808-S 60817-S 60826-S	60800-S 60809-S 60818-S 60827-S	60801-S 60810-S 60819-S 60828-S	60802-S 60811-S 60820-S 60829-S	60803-S 60812-S 60821-S 60830-S	60804-S 60813-S 60822-S 60831-S	60805-S 60814-S 60823-S 60832-S	60806-S 60815-S 60824-S 60833-S	60807-S 60816-S 60825-S 60834-S						
5/8 11/16 3/4 13/16	60835-S 60844-S 60853-S 60862-S	60836-S 60845-S 60854-S 60863-S	60837-S 60846-S 60855-S 60864-S	60838-S 60847-S 60856-S 60865-S	60839-S 60848-S 60857-S 60866-S	60840-S 60849-S 60858-S 60867-S	60841-S 60850-S 60859-S 60868-S	60842-S 60851-S 60860-S 60869-S	60843-S 60852-S 60861-S 60870-S						

NOTE:
For General Specifications see Page G-950.01. For Finishes see Addendum.

FORD MOTOR COMPANY
STANDARD PARTS

SOLID RIVETS — BUTTON HEAD

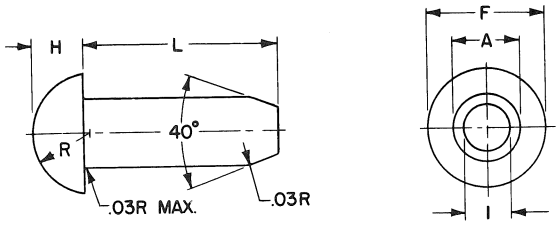

		3/16	1/4	5/16	3/8	7/16	1/2
A	Body Diameter	.191 .182	.253 .244	.317 .305	.380 .365	.443 .428	.520 .478
F	Head Diameter	.348 .322	.460 .430	.572 .538	.684 .646	.798 .754	.938 .844
H	Head Thickness	.147 .133	.196 .180	.243 .225	.291 .271	.339 .317	.406 .375
I	Point Diameter	.128 .122	.159 .153	.187 .183	.254 .246	.348 .340	.349 .339
R	Radius (approx.)	.166	.221	.276	.332	.387	.443

L LENGTH — FORD PART NUMBERS

5/16 3/8 7/16 1/2	65001-S 65002-S 65003-S 65004-S	65017-S 65018-S	65037-S			
9/16 5/8 11/16 3/4	65005-S 65006-S 65007-S 65008-S	65019-S 65020-S 65021-S 65022-S	65038-S 65039-S 65040-S 65041-S	65062-S 65063-S 65064-S	65085-S 65086-S	65107-S
13/16 7/8 15/16 1	65009-S 65010-S 65011-S 65012-S	65023-S 65024-S 65025-S 65026-S	65042-S 65043-S 65044-S 65045-S	65065-S 65066-S 65067-S 65068-S	65087-S 65088-S 65089-S 65090-S	65108-S 65109-S 65110-S 65111-S
1 1/16 1 1/8 1 3/16 1 1/4	65013-S 65014-S 65015-S 65016-S	65027-S 65028-S 65029-S 65030-S	65046-S 65047-S 65048-S 65049-S	65069-S 65070-S 65071-S 65072-S	65091-S 65092-S 65093-S 65094-S	65112-S 65113-S 65114-S 65115-S
1 5/16 1 3/8 1 7/16 1 1/2		65031-S 65032-S 65033-S 65034-S	65050-S 65051-S 65052-S 65053-S	65073-S 65074-S 65075-S 65076-S	65095-S 65096-S 65097-S 65098-S	65116-S 65117-S 65118-S 65119-S
1 5/8 1 3/4 1 7/8 2		65035-S 65036-S	65054-S 65055-S 65056-S 65057-S	65077-S 65078-S 65079-S 65080-S	65099-S 65100-S 65101-S 65102-S	65120-S 65121-S 65122-S 65123-S
2 1/8 2 1/4 2 3/8 2 1/2			65058-S 65059-S 65060-S 65061-S	65081-S 65082-S 65083-S 65084-S	65103-S 65104-S 65105-S 65106-S	65124-S 65125-S 65126-S 65127-S

NOTE:
For General Specifications See Page G-950.01. For Finishes See Addendum.
MATERIAL: M-1A14 Steel.

FORD MOTOR COMPANY
STANDARD PARTS

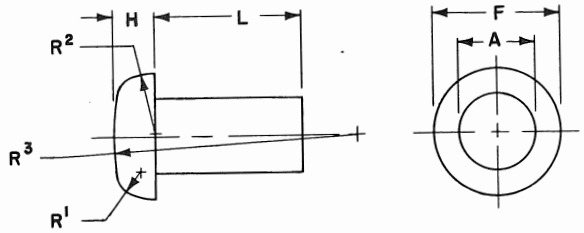

		1/16	3/32	1/8	5/32	3/16	7/32	1/4	9/32	5/16	11/32	3/8	7/16	1/2
A	Body Diameter	.065 .060	.096 .090	.127 .121	.158 .152	.191 .182	.222 .213	.253 .244	.285 .273	.317 .305	.348 .336	.380 .365	.443 .428	.520 .478
F	Head Diameter	.118 .098	.173 .153	.225 .205	.279 .257	.334 .308	.391 .365	.444 .414	.499 .465	.552 .518	.608 .570	.663 .625	.772 .728	.896 .822
H	Head Thickness	.040 .030	.060 .048	.078 .066	.096 .082	.114 .100	.133 .119	.151 .135	.170 .152	.187 .169	.206 .186	.225 .205	.261 .239	.296 .272
R_1	Head Radius	.019	.030	.039	.049	.059	.069	.079	.088	.098	.108	.118	.137	.157
R_2	Head Radius	.052	.080	.106	.133	.159	.186	.213	.239	.266	.292	.319	.372	.425
R_3	Head Radius	.217	.326	.429	.535	.641	.754	.858	.963	1.070	1.176	1.286	1.500	1.715

FORD PART NUMBERS

L LENGTH	1/16	3/32	1/8	5/32	3/16	7/32	1/4	9/32	5/16	11/32	3/8	7/16	1/2
1/8, 3/16, 1/4	61375-S 61378-S 61383-S	61376-S 61379-S 61384-S	61377-S 61380-S 61385-S	61381-S 61386-S	61382-S 61387-S	61388-S	61389-S						
5/16, 3/8, 7/16, 1/2	61390-S 61399-S 61412-S 61425-S	61391-S 61400-S 61413-S 61426-S	61392-S 61401-S 61414-S 61427-S	61393-S 61402-S 61415-S 61428-S	61394-S 61403-S 61416-S 61429-S	61395-S 61404-S 61417-S 61430-S	61396-S 61405-S 61418-S 61431-S	61397-S 61406-S 61419-S 61432-S	61398-S 61407-S 61420-S 61433-S	61408-S 61421-S 61434-S	61409-S 61422-S 61435-S	61410-S 61423-S 61436-S	61411-S 61424-S 61437-S
9/16, 5/8, 11/16, 3/4	61438-S 61451-S	61439-S 61452-S 61464-S 61476-S	61440-S 61453-S 61465-S 61477-S	61441-S 61454-S 61466-S 61478-S	61442-S 61455-S 61467-S 61479-S	61443-S 61456-S 61468-S 61480-S	61444-S 61457-S 61469-S 61481-S	61445-S 61458-S 61470-S 61482-S	61446-S 61459-S 61471-S 61483-S	61447-S 61460-S 61472-S 61484-S	61448-S 61461-S 61473-S 61485-S	61449-S 61462-S 61474-S 61486-S	61450-S 61463-S 61475-S 61487-S
13/16, 7/8, 15/16, 1		61488-S 61500-S	61489-S 61501-S 61512-S 61523-S	61490-S 61502-S 61513-S 61524-S	61491-S 61503-S 61514-S 61525-S	61492-S 61504-S 61515-S 61526-S	61493-S 61505-S 61516-S 61527-S	61494-S 61506-S 61517-S 61528-S	61495-S 61507-S 61518-S 61529-S	61496-S 61508-S 61519-S 61530-S	61497-S 61509-S 61520-S 61531-S	61498-S 61510-S 61521-S 61532-S	61499-S 61511-S 61522-S 61533-S
1 1/16, 1 1/8, 1 3/16, 1 1/4			61534-S 61545-S	61535-S 61546-S 61556-S 61566-S	61536-S 61547-S 61557-S 61567-S	61537-S 61548-S 61558-S 61568-S	61538-S 61549-S 61559-S 61569-S	61539-S 61550-S 61560-S 61570-S	61540-S 61551-S 61561-S 61571-S	61541-S 61552-S 61562-S 61572-S	61542-S 61553-S 61563-S 61573-S	61543-S 61554-S 61564-S 61574-S	61544-S 61555-S 61565-S 61575-S

NOTES:
For General Specifications see Page G-950.01. For Finishes see Addendum.
MATERIAL: M-1A14 Steel

FORD MOTOR COMPANY
STANDARD PARTS

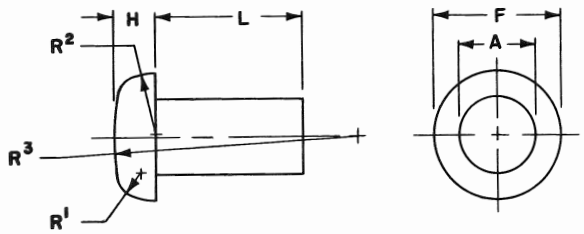

		1/16	3/32	1/8	5/32	3/16	7/32	1/4	9/32	5/16	11/32	3/8	7/16	1/2
A	Body Diameter	.065 .060	.096 .090	.127 .121	.158 .152	.191 .182	.222 .213	.253 .244	.285 .273	.317 .305	.348 .336	.380 .365	.443 .428	.520 .478
F	Head Diameter	.118 .098	.173 .153	.225 .205	.279 .257	.334 .308	.391 .365	.444 .414	.499 .465	.552 .518	.608 .570	.663 .625	.772 .728	.896 .822
H	Head Thickness	.040 .030	.060 .048	.078 .066	.096 .082	.114 .100	.133 .119	.151 .135	.170 .152	.187 .169	.206 .186	.225 .205	.261 .239	.296 .272
R_1	Head Radius	.019	.030	.039	.049	.059	.069	.079	.088	.098	.108	.118	.137	.157
R_2	Head Radius	.052	.080	.106	.133	.159	.186	.213	.239	.266	.292	.319	.372	.425
R_3	Head Radius	.217	.326	.429	.535	.641	.754	.858	.963	1.070	1.176	1.286	1.500	1.715

FORD PART NUMBERS

L LENGTH														
1 3/8 1 1/2 1 5/8 1 3/4				61576-S 61586-S	61577-S 61587-S 61596-S 61605-S	61578-S 61588-S 61597-S 61606-S	61579-S 61589-S 61598-S 61607-S	61580-S 61590-S 61599-S 61608-S	61581-S 61591-S 61600-S 61609-S	61582-S 61592-S 61601-S 61610-S	61583-S 61593-S 61602-S 61611-S	61584-S 61594-S 61603-S 61612-S	61585-S 61595-S 61604-S 61613-S
1 7/8 2 2 1/8 2 1/4					61614-S 61623-S	61615-S 61624-S 61632-S 61640-S	61616-S 61625-S 61633-S 61641-S	61617-S 61626-S 61634-S 61642-S	61618-S 61627-S 61635-S 61643-S	61619-S 61628-S 61636-S 61644-S	61620-S 61629-S 61637-S 61645-S	61621-S 61630-S 61638-S 61646-S	61622-S 61631-S 61639-S 61647-S
2 3/8 2 1/2 2 5/8 2 3/4						61648-S 61656-S 61664-S 61672-S	61649-S 61657-S 61665-S 61673-S	61650-S 61658-S 61666-S 61674-S	61651-S 61659-S 61667-S 61675-S	61652-S 61660-S 61668-S 61676-S	61653-S 61661-S 61669-S 61677-S	61654-S 61662-S 61670-S 61678-S	61655-S 61663-S 61671-S 61679-S
2 7/8 3 3 1/4 3 1/2						61680-S 61688-S 61696-S 61704-S	61681-S 61689-S 61697-S 61705-S	61682-S 61690-S 61698-S 61706-S	61683-S 61691-S 61699-S 61707-S	61684-S 61692-S 61700-S 61708-S	61685-S 61693-S 61701-S 61709-S	61686-S 61694-S 61702-S 61710-S	61687-S 61695-S 61703-S 61711-S
3 3/4 4 4 1/4 4 1/2						61712-S 61720-S 61728-S 61736-S	61713-S 61721-S 61729-S 61737-S	61714-S 61722-S 61730-S 61738-S	61715-S 61723-S 61731-S 61739-S	61716-S 61724-S 61732-S 61740-S	61717-S 61725-S 61733-S 61741-S	61718-S 61726-S 61734-S 61742-S	61719-S 61727-S 61735-S 61743-S

NOTES:
For General Specifications see Page G-950.01. For Finishes see Addendum.
MATERIAL: M-1A14 Steel

FORD MOTOR COMPANY
STANDARD PARTS

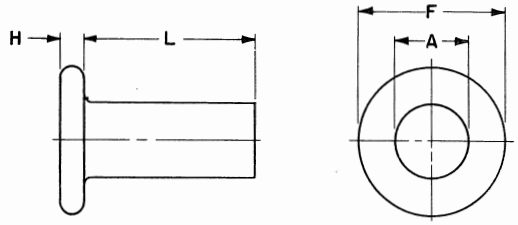

		1/16	3/32	1/8	5/32	3/16	7/32	1/4	9/32	5/16	11/32	3/8	7/16	1/2	9/16	5/8
A	Body Diameter	.065 .060	.096 .090	.127 .121	.158 .152	.191 .182	.222 .213	.253 .244	.285 .273	.317 .305	.348 .336	.380 .365	.443 .428	.520 .478	.592 .538	.655 .600
F	Head Diameter	.140 .120	.200 .180	.260 .240	.323 .301	.387 .361	.453 .427	.515 .485	.579 .545	.641 .607	.705 .667	.769 .731	.896 .852	1.125 .875	1.250 1.000	1.375 1.125
H	Head Thickness	.027 .017	.038 .026	.048 .036	.059 .045	.069 .055	.080 .065	.091 .075	.103 .085	.113 .095	.124 .104	.135 .115	.157 .135	.179 .155	.201 .175	.222 .196

FORD PART NUMBERS

L LENGTH	1/16	3/32	1/8	5/32	3/16	7/32	1/4	9/32	5/16	11/32	3/8	7/16	1/2	9/16	5/8
1/8, 3/16, 1/4	60000-S 60003-S 60008-S	60001-S 60004-S 60009-S	60002-S 60005-S 60010-S	60006-S 60011-S	60007-S 60012-S	60013-S	60014-S								
5/16, 3/8, 7/16, 1/2	60015-S 60022-S 60033-S 60044-S	60016-S 60023-S 60034-S 60045-S	60017-S 60024-S 60035-S 60046-S	60018-S 60025-S 60036-S 60047-S	60019-S 60026-S 60037-S 60048-S	60020-S 60027-S 60038-S 60049-S	60021-S 60028-S 60039-S 60050-S	60029-S 60040-S 60051-S	60030-S 60041-S 60052-S	60031-S 60042-S 60053-S	60032-S 60043-S 60054-S	60055-S	60056-S		
9/16, 5/8, 11/16, 3/4	60057-S 60070-S 60085-S 60100-S	60058-S 60071-S 60086-S 60101-S	60059-S 60072-S 60087-S 60102-S	60060-S 60073-S 60088-S 60103-S	60061-S 60074-S 60089-S 60104-S	60062-S 60075-S 60090-S 60105-S	60063-S 60076-S 60091-S 60106-S	60064-S 60077-S 60092-S 60107-S	60065-S 60078-S 60093-S 60108-S	60066-S 60079-S 60094-S 60109-S	60067-S 60080-S 60095-S 60110-S	60068-S 60081-S 60096-S 60111-S	60069-S 60082-S 60097-S 60112-S	60083-S 60098-S 60113-S	60084-S 60099-S 60114-S
13/16, 7/8, 15/16, 1	60115-S 60130-S	60116-S 60131-S	60117-S 60132-S 60145-S 60158-S	60118-S 60133-S 60146-S 60159-S	60119-S 60134-S 60147-S 60160-S	60120-S 60135-S 60148-S 60161-S	60121-S 60136-S 60149-S 60162-S	60122-S 60137-S 60150-S 60163-S	60123-S 60138-S 60151-S 60164-S	60124-S 60139-S 60152-S 60165-S	60125-S 60140-S 60153-S 60166-S	60126-S 60141-S 60154-S 60167-S	60127-S 60142-S 60155-S 60168-S	60128-S 60143-S 60156-S 60169-S	60129-S 60144-S 60157-S 60170-S
1 1/16, 1 1/8, 1 3/16, 1 1/4					60171-S 60182-S 60193-S 60204-S	60172-S 60183-S 60194-S 60205-S	60173-S 60184-S 60195-S 60206-S	60174-S 60185-S 60196-S 60207-S	60175-S 60186-S 60197-S 60208-S	60176-S 60187-S 60198-S 60209-S	60177-S 60188-S 60199-S 60210-S	60178-S 60189-S 60200-S 60211-S	60179-S 60190-S 60201-S 60212-S	60180-S 60191-S 60202-S 60213-S	60181-S 60192-S 60203-S 60214-S
1 3/8, 1 1/2, 1 5/8, 1 3/4							60215-S 60224-S 60233-S 60242-S	60216-S 60225-S 60234-S 60243-S	60217-S 60226-S 60235-S 60244-S	60218-S 60227-S 60236-S 60245-S	60219-S 60228-S 60237-S 60246-S	60220-S 60229-S 60238-S 60247-S	60221-S 60230-S 60239-S 60248-S	60222-S 60231-S 60240-S 60249-S	60223-S 60232-S 60241-S 60250-S
1 7/8, 2, 2 1/8, 2 1/4									60251-S 60258-S 60265-S 60272-S	60252-S 60259-S 60266-S 60273-S	60253-S 60260-S 60267-S 60274-S	60254-S 60261-S 60268-S 60275-S	60255-S 60262-S 60269-S 60276-S	60256-S 60263-S 60270-S 60277-S	60257-S 60264-S 60271-S 60278-S

NOTES:

For General Specifications See Page G-950.01. For Finishes see Addendum.
MATERIAL: M-1A14 Steel.

FORD MOTOR COMPANY
STANDARD PARTS

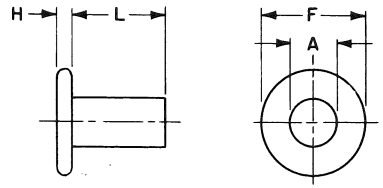

		6 OZ.	8 OZ.	10 OZ.	12 OZ.	14 OZ.	1 LB.	1-1/4 LB.	1-1/2 LB.	1-3/4 LB.	2 LB.	2-1/2 LB.	3 LB.	3-1/2 LB.
A	Body Diameter	.081 .075	.091 .085	.097 .091	.107 .101	.111 .105	.113 .107	.122 .116	.132 .126	.136 .130	.146 .140	.150 .144	.163 .154	.168 .159
F	Head Diameter	.213 .193	.225 .205	.250 .230	.265 .245	.275 .255	.285 .265	.295 .275	.316 .294	.331 .309	.341 .319	.311 .289	.329 .303	.348 .322
H	Head Thickness	.028 .016	.036 .024	.037 .025	.037 .025	.038 .026	.040 .028	.045 .033	.046 .034	.049 .035	.050 .036	.069 .055	.073 .059	.074 .060
L	Length	.135 .115	.166 .146	.182 .162	.198 .178	.198 .178	.213 .193	.229 .209	.244 .224	.260 .240	.276 .256	.291 .271	.323 .303	.338 .318
	Weight lbs. per 1000	.375	.500	.625	.750	.875	1.00	1.25	1.50	1.75	2.00	2.50	3.00	3.50
	Ford Part Numbers	62575-S	62576-S	62577-S	62578-S	62579-S	62580-S	62581-S	62582-S	62583-S	62584-S	62585-S	62586-S	62587-S

		4 LB.	5 LB.	6 LB.	7 LB.	8 LB.	9 LB.	10 LB.	12 LB.	14 LB.	16 LB.	18 LB.
A	Body Diameter	.179 .170	.190 .181	.206 .197	.223 .214	.227 .218	.241 .232	.241 .232	.263 .251	.288 .276	.304 .292	.347 .335
F	Head Diameter	.368 .342	.388 .362	.419 .393	.431 .405	.475 .445	.490 .460	.505 .475	.532 .498	.577 .543	.597 .563	.706 .668
H	Head Thickness	.076 .062	.084 .070	.090 .076	.094 .080	.101 .085	.103 .087	.104 .088	.108 .090	.113 .095	.128 .110	.156 .136
L	Length	.354 .334	.385 .365	.401 .381	.416 .396	.448 .428	.463 .443	.479 .459	.510 .490	.525 .505	.541 .521	.603 .583
	Weight lbs. per 1000	4.00	5.00	6.00	7.00	8.00	9.00	10.0	12.0	14.0	16.0	18.0
	Ford Part Numbers	62588-S	62589-S	62590-S	62591-S	62592-S	62593-S	62594-S	62595-S	62596-S	62597-S	62598-S

NOTES:

For General Specifications See Page G-950.01. For Finishes see Addendum.
MATERIAL: M-1A14 Steel.

FORD MOTOR COMPANY
STANDARD PARTS

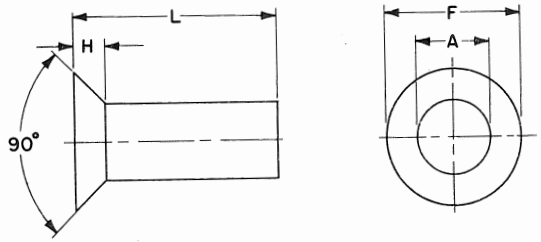

		1/16	3/32	1/8	5/32	3/16	7/32	1/4	9/32	5/16	11/32	3/8	7/16	1/2
A	Body Diameter	.065 .060	.096 .090	.127 .121	.158 .152	.191 .182	.222 .213	.253 .244	.285 .273	.317 .305	.348 .336	.380 .365	.443 .428	.506 .488
F	Head Diameter	.118 .115	.176 .171	.235 .227	.293 .284	.351 .340	.413 .400	.469 .455	.528 .511	.588 .569	.646 .626	.704 .682	.823 .797	.938 .910
F	Absolute Minimum	.110	.163	.217	.272	.326	.384	.437	.491	.547	.602	.656	.765	.874
H	Head Thickness	.027	.040	.053	.066	.079	.094	.106	.119	.133	.146	.159	.186	.213

FORD PART NUMBERS

L LENGTH													
1/8 3/16 1/4	62175-S 62178-S 62183-S	62176-S 62179-S 62184-S	62177-S 62180-S 62185-S	62181-S 62186-S	62182-S 62187-S	62188-S	62189-S						
5/16 3/8 7/16 1/2	62190-S 62199-S 62212-S 62225-S	62191-S 62200-S 62213-S 62226-S	62192-S 62201-S 62214-S 62227-S	62193-S 62202-S 62215-S 62228-S	62194-S 62203-S 62216-S 62229-S	62195-S 62204-S 62217-S 62230-S	62196-S 62205-S 62218-S 62231-S	62197-S 62206-S 62219-S 62232-S	62198-S 62207-S 62220-S 62233-S	62208-S 62221-S 62234-S	62209-S 62222-S 62235-S	62210-S 62223-S 62236-S	62211-S 62224-S 62237-S
9/16 5/8 11/16 3/4	62238-S 62251-S	62239-S 62252-S 62264-S 62276-S	62240-S 62253-S 62265-S 62277-S	62241-S 62254-S 62266-S 62278-S	62242-S 62255-S 62267-S 62279-S	62243-S 62256-S 62268-S 62280-S	62244-S 62257-S 62269-S 62281-S	62245-S 62258-S 62270-S 62282-S	62246-S 62259-S 62271-S 62283-S	62247-S 62260-S 62272-S 62284-S	62248-S 62261-S 62273-S 62285-S	62249-S 62262-S 62274-S 62286-S	62250-S 62263-S 62275-S 62287-S
13/16 7/8 15/16 1		62288-S 62300-S	62289-S 62301-S 62312-S 62323-S	62290-S 62302-S 62313-S 62324-S	62291-S 62303-S 62314-S 62325-S	62292-S 62304-S 62315-S 62326-S	62293-S 62305-S 62316-S 62327-S	62294-S 62306-S 62317-S 62328-S	62295-S 62307-S 62318-S 62329-S	62296-S 62308-S 62319-S 62330-S	62297-S 62309-S 62320-S 62331-S	62298-S 62310-S 62321-S 62332-S	62299-S 62311-S 62322-S 62333-S
1 1/16 1 1/8 1 3/16 1 1/4			62334-S 62345-S	62335-S 62346-S 62356-S 62366-S	62336-S 62347-S 62357-S 62367-S	62337-S 62348-S 62358-S 62368-S	62338-S 62349-S 62359-S 62369-S	62339-S 62350-S 62360-S 62370-S	62340-S 62351-S 62361-S 62371-S	62341-S 62352-S 62362-S 62372-S	62342-S 62353-S 62363-S 62373-S	62343-S 62354-S 62364-S 62374-S	62344-S 62355-S 62365-S 62375-S

NOTES:

For General Specifications see Page G-950.01. For Finishes see Addendum.
MATERIAL: M-1A14 Steel.
Head height dimension given for construction purposes only. Variations in this dimension are controlled by the head diameters and the included angle of the head.

FORD MOTOR COMPANY
STANDARD PARTS

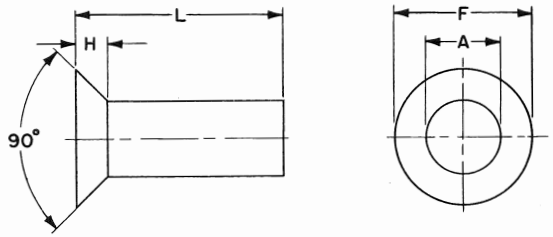

		1/16	3/32	1/8	5/32	3/16	7/32	1/4	9/32	5/16	11/32	3/8	7/16	1/2
A	Body Diameter	.065 .060	.096 .090	.127 .121	.158 .152	.191 .182	.222 .213	.253 .244	.285 .273	.317 .305	.348 .336	.380 .365	.443 .428	.506 .488
F	Head Diameter	.118 .115	.176 .171	.235 .227	.293 .284	.351 .340	.413 .400	.469 .455	.528 .511	.588 .569	.646 .626	.704 .682	.823 .797	.938 .910
F	Absolute Minimum	.110	.163	.217	.272	.326	.384	.437	.491	.547	.602	.656	.765	.874
H	Head Thickness	.027	.040	.053	.066	.079	.094	.106	.119	.133	.146	.159	.186	.213

FORD PART NUMBERS

L LENGTH	1/16	3/32	1/8	5/32	3/16	7/32	1/4	9/32	5/16	11/32	3/8	7/16	1/2
1 3/8, 1 1/2, 1 5/8, 1 3/4				62376-S 62386-S	62377-S 62387-S 62396-S 62405-S	62378-S 62388-S 62397-S 62406-S	62379-S 62389-S 62398-S 62407-S	62380-S 62390-S 62399-S 62408-S	62381-S 62391-S 62400-S 62409-S	62382-S 62392-S 62401-S 62410-S	62383-S 62393-S 62402-S 62411-S	62384-S 62394-S 62403-S 62412-S	62385-S 62395-S 62404-S 62413-S
1 7/8, 2, 2 1/8, 2 1/4					62414-S 62423-S	62415-S 62424-S 62432-S 62440-S	62416-S 62425-S 62433-S 62441-S	62417-S 62426-S 62434-S 62442-S	62418-S 62427-S 62435-S 62443-S	62419-S 62428-S 62436-S 62444-S	62420-S 62429-S 62437-S 62445-S	62421-S 62430-S 62438-S 62446-S	62422-S 62431-S 62439-S 62447-S
2 3/8, 2 1/2, 2 5/8, 2 3/4						62448-S 62456-S 62464-S 62472-S	62449-S 62457-S 62465-S 62473-S	62450-S 62458-S 62466-S 62474-S	62451-S 62459-S 62467-S 62475-S	62452-S 62460-S 62468-S 62476-S	62453-S 62461-S 62469-S 62477-S	62454-S 62462-S 62470-S 62478-S	62455-S 62463-S 62471-S 62479-S
2 7/8, 3, 3 1/4, 3 1/2						62480-S 62488-S 62496-S 62504-S	62481-S 62489-S 62497-S 62505-S	62482-S 62490-S 62498-S 62506-S	62483-S 62491-S 62499-S 62507-S	62484-S 62492-S 62500-S 62508-S	62485-S 62493-S 62501-S 62509-S	62486-S 62494-S 62502-S 62510-S	62487-S 62495-S 62503-S 62511-S
3 3/4, 4, 4 1/4, 4 1/2						62512-S 62520-S 62528-S 62536-S	62513-S 62521-S 62529-S 62537-S	62514-S 62522-S 62530-S 62538-S	62515-S 62523-S 62531-S 62539-S	62516-S 62524-S 62532-S 62540-S	62517-S 62525-S 62533-S 62541-S	62518-S 62526-S 62534-S 62542-S	62519-S 62527-S 62535-S 62543-S

NOTES:

For General Specifications see Page G-950.01. For Finishes see Addendum.
MATERIAL: M-1A14 Steel.
Head height dimension given for construction purposes only.
Variations in this dimension are controlled by the head diameters and the included angle of the head.

FORD MOTOR COMPANY
STANDARD PARTS

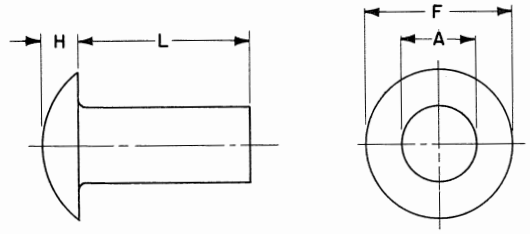

		1/16	3/32	1/8	5/32	3/16	7/32	1/4	9/32	5/16	11/32	3/8	7/16	1/2
A	Body Diameter	.065 .060	.096 .090	.127 .121	.158 .152	.191 .182	.222 .213	.253 .244	.285 .273	.317 .305	.348 .336	.380 .365	.443 .428	.506 .488
F	Head Diameter	.125	.188	.250	.313	.375	.438	.500	.563	.625	.688	.750	.813	.875
H	Head Thickness	.031	.047	.063	.078	.094	.109	.125	.141	.156	.172	.188	.203	.219

L LENGTH — FORD PART NUMBERS

L	1/16	3/32	1/8	5/32	3/16	7/32	1/4	9/32	5/16	11/32	3/8	7/16	1/2
1/8, 3/16, 1/4	60875-S 60878-S 60883-S	60876-S 60879-S 60884-S	60877-S 60880-S 60885-S	60881-S 60886-S	60882-S 60887-S	60888-S	60889-S						
5/16, 3/8, 7/16, 1/2	60890-S 60999-S 60912-S 60925-S	60891-S 60900-S 60913-S 60926-S	60892-S 60901-S 60914-S 60927-S	60893-S 60902-S 60915-S 60928-S	60894-S 60903-S 60916-S 60929-S	60895-S 60904-S 60917-S 60930-S	60896-S 60905-S 60918-S 60931-S	60897-S 60906-S 60919-S 60932-S	60898-S 60907-S 60920-S 60933-S	60908-S 60921-S 60934-S	60909-S 60922-S 60935-S	60910-S 60923-S 60936-S	60911-S 60924-S 60937-S
9/16, 5/8, 11/16, 3/4	60938-S 60951-S	60939-S 60952-S 60964-S 60976-S	60940-S 60953-S 60965-S 60977-S	60941-S 60954-S 60966-S 60978-S	60942-S 60955-S 60967-S 60979-S	60943-S 60956-S 60968-S 60980-S	60944-S 60957-S 60969-S 60981-S	60945-S 60958-S 60970-S 60982-S	60946-S 60959-S 60971-S 60983-S	60947-S 60960-S 60972-S 60984-S	60948-S 60961-S 60973-S 60985-S	60949-S 60962-S 60974-S 60986-S	60950-S 60963-S 60975-S 60987-S
13/16, 7/8, 15/16, 1		60988-S 61000-S	60989-S 61001-S 61012-S 61023-S	60990-S 61002-S 61013-S 61024-S	60991-S 61003-S 61014-S 61025-S	60992-S 61004-S 61015-S 61026-S	60993-S 61005-S 61016-S 61027-S	60994-S 61006-S 61017-S 61028-S	60995-S 61007-S 61018-S 61029-S	60996-S 61008-S 61019-S 61030-S	60997-S 61009-S 61020-S 61031-S	60998-S 61010-S 61021-S 61032-S	60999-S 61011-S 61022-S 61033-S
1 1/16, 1 1/8, 1 3/16, 1 1/4			61034-S 61045-S	61035-S 61046-S 61056-S 61066-S	61036-S 61047-S 61057-S 61067-S	61037-S 61048-S 61058-S 61068-S	61038-S 61049-S 61059-S 61069-S	61039-S 61050-S 61060-S 61070-S	61040-S 61051-S 61061-S 61071-S	61041-S 61052-S 61062-S 61072-S	61042-S 61053-S 61063-S 61073-S	61043-S 61054-S 61064-S 61074-S	61044-S 61055-S 61065-S 61075-S
1 3/8, 1 1/2, 1 5/8, 1 3/4				61076-S 61086-S	61077-S 61087-S 61096-S 61105-S	61078-S 61088-S 61097-S 61106-S	61079-S 61089-S 61098-S 61107-S	61080-S 61090-S 61099-S 61108-S	61081-S 61091-S 61100-S 61109-S	61082-S 61092-S 61101-S 61110-S	61083-S 61093-S 61102-S 61111-S	61084-S 61094-S 61103-S 61112-S	61085-S 61095-S 61104-S 61113-S
1 7/8, 2, 2 1/8, 2 1/4					61114-S 61123-S	61115-S 61124-S 61132-S 61140-S	61116-S 61125-S 61133-S 61141-S	61117-S 61126-S 61134-S 61142-S	61118-S 61127-S 61135-S 61143-S	61119-S 61128-S 61136-S 61144-S	61120-S 61129-S 61137-S 61145-S	61121-S 61130-S 61138-S 61146-S	61122-S 61131-S 61139-S 61147-S

NOTES:
For General Specifications see Page G-950.01. For Finishes see Addendum.
Material: M-1A14 Steel

FORD MOTOR COMPANY
STANDARD PARTS

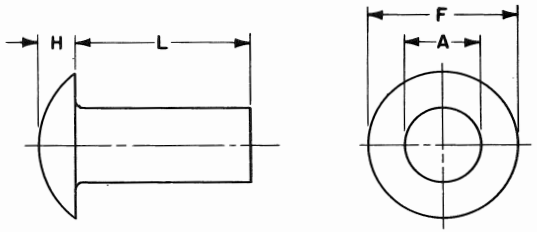

		1/16	3/32	1/8	5/32	3/16	7/32	1/4	9/32	5/16	11/32	3/8	7/16	1/2
A	Body Diameter	.065 .060	.096 .090	.127 .121	.158 .152	.191 .182	.222 .213	.253 .244	.285 .273	.317 .305	.348 .336	.380 .365	.443 .428	.506 .488
F	Head Diameter	.125	.188	.250	.313	.375	.438	.500	.563	.625	.688	.750	.813	.875
H	Head Thickness	.031	.047	.063	.078	.094	.109	.125	.141	.156	.172	.188	.203	.219

L LENGTH — FORD PART NUMBERS — MATERIAL: M-1A14 Steel

L	1/16	3/32	1/8	5/32	3/16	7/32	1/4	9/32	5/16	11/32	3/8	7/16	1/2
2 3/8 2 1/2 2 5/8 2 3/4						61148-S 61156-S 61164-S 61172-S	61149-S 61157-S 61165-S 61173-S	61150-S 61158-S 61166-S 61174-S	61151-S 61159-S 61167-S 61175-S	61152-S 61160-S 61168-S 61176-S	61153-S 61161-S 61169-S 61177-S	61154-S 61162-S 61170-S 61178-S	61155-S 61163-S 61171-S 61179-S
2 7/8 3 3 1/4 3 1/2						61180-S 61188-S 61196-S 61204-S	61181-S 61189-S 61197-S 61205-S	61182-S 61190-S 61198-S 61206-S	61183-S 61191-S 61199-S 61207-S	61184-S 61192-S 61200-S 61208-S	61185-S 61193-S 61201-S 61209-S	61186-S 61194-S 61202-S 61210-S	61187-S 61195-S 61203-S 61211-S
3 3/4 4 4 1/4 4 1/2						61212-S 61220-S 61228-S 61236-S	61213-S 61221-S 61229-S 61237-S	61214-S 61222-S 61230-S 61238-S	61215-S 61223-S 61231-S 61239-S	61216-S 61224-S 61232-S 61240-S	61217-S 61225-S 61233-S 61241-S	61218-S 61226-S 61234-S 61242-S	61219-S 61227-S 61235-S 61243-S

L LENGTH — FORD PART NUMBERS — MATERIAL: SAE 72 Brass

L	1/16	3/32	1/8	5/32	3/16	7/32	1/4	9/32	5/16	11/32	3/8	7/16	1/2
1/8 3/16 1/4 5/16	61275-S 61278-S 61283-S 61290-S	61276-S 61279-S 61284-S 61291-S	61277-S 61280-S 61285-S 61292-S	61281-S 61286-S 61293-S	61282-S 61287-S 61294-S	61288-S 61295-S	61289-S 61296-S	61297-S	61298-S				
3/8 7/16 1/2 9/16	61299-S 61308-S 61317-S 61326-S	61300-S 61309-S 61318-S 61327-S	61301-S 61310-S 61319-S 61328-S	61302-S 61311-S 61320-S 61329-S	61303-S 61312-S 61321-S 61330-S	61304-S 61313-S 61322-S 61331-S	61305-S 61314-S 61323-S 61332-S	61306-S 61315-S 61324-S 61333-S	61307-S 61316-S 61325-S 61334-S				
5/8 11/16 3/4 13/16	61335-S 61344-S 61353-S 61362-S	61336-S 61345-S 61354-S 61363-S	61337-S 61346-S 61355-S 61364-S	61338-S 61347-S 61356-S 61365-S	61339-S 61348-S 61357-S 61366-S	61340-S 61349-S 61358-S 61367-S	61341-S 61350-S 61359-S 61368-S	61342-S 61351-S 61360-S 61369-S	61343-S 61352-S 61361-S 61370-S				

NOTES:
For General Specifications see Page G-950.01. For Finishes see Addendum.

FORD MOTOR COMPANY
STANDARD PARTS

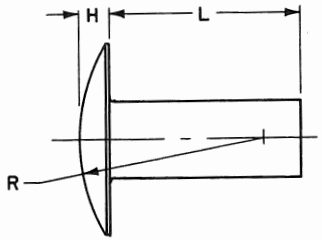

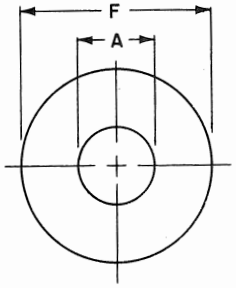

		1/16	3/32	1/8	5/32	3/16	7/32	1/4	9/32	5/16	11/32	3/8	7/16	1/2
A	Body Diameter	.065 .060	.096 .090	.127 .121	.158 .152	.191 .182	.222 .213	.253 .244	.285 .273	.317 .305	.348 .336	.380 .365	.443 .428	.506 .488
F	Head Diameter	.150 .138	.226 .206	.297 .277	.368 .348	.442 .422	.515 .495	.590 .560	.661 .631	.732 .702	.806 .776	.878 .848	1.020 .990	1.165 1.135
H	Head Thickness	.022 .020	.038 .026	.048 .036	.059 .045	.069 .055	.080 .066	.091 .075	.103 .085	.113 .095	.124 .104	.135 .115	.157 .135	1.164 1.123
R	Head Radius	.157	.239	.314	.392	.470	.555	.628	.706	.784	.862	.942	1.098	1.256

FORD PART NUMBERS

L LENGTH	1/16	3/32	1/8	5/32	3/16	7/32	1/4	9/32	5/16	11/32	3/8	7/16	1/2
1/8, 3/16, 1/4	61775-S 61778-S 61783-S	61776-S 61779-S 61784-S	61777-S 61780-S 61785-S	61781-S 61786-S	61782-S 61787-S	61788-S	61789-S						
5/16, 3/8, 7/16, 1/2	61790-S 61799-S 61812-S 61825-S	61791-S 61800-S 61813-S 61826-S	61792-S 61801-S 61814-S 61827-S	61793-S 61802-S 61815-S 61828-S	61794-S 61803-S 61816-S 61829-S	61795-S 61804-S 61817-S 61830-S	61796-S 61805-S 61818-S 61831-S	61797-S 61806-S 61819-S 61832-S	61798-S 61807-S 61820-S 61833-S	61808-S 61821-S 61834-S	61809-S 61822-S 61835-S	61810-S 61823-S 61836-S	61811-S 61824-S 61837-S
9/16, 5/8, 11/16, 3/4	61838-S 61851-S	61839-S 61852-S 61864-S 61876-S	61840-S 61853-S 61865-S 61877-S	61841-S 61854-S 61866-S 61878-S	61842-S 61855-S 61867-S 61879-S	61843-S 61856-S 61868-S 61880-S	61844-S 61857-S 61869-S 61881-S	61845-S 61858-S 61870-S 61882-S	61846-S 61859-S 61871-S 61883-S	61847-S 61860-S 61872-S 61884-S	61848-S 61861-S 61873-S 61885-S	61849-S 61862-S 61874-S 61886-S	61850-S 61863-S 61875-S 61887-S
13/16, 7/8, 15/16, 1		61888-S 61900-S	61889-S 61901-S 61912-S 61923-S	61890-S 61902-S 61913-S 61924-S	61891-S 61903-S 61914-S 61925-S	61892-S 61904-S 61915-S 61926-S	61893-S 61905-S 61916-S 61927-S	61894-S 61906-S 61917-S 61928-S	61895-S 61907-S 61918-S 61929-S	61896-S 61908-S 61919-S 61930-S	61897-S 61909-S 61920-S 61931-S	61898-S 61910-S 61921-S 61932-S	61899-S 61911-S 61922-S 61933-S
1 1/16, 1 1/8, 1 3/16, 1 1/4			61934-S 61945-S	61935-S 61946-S 61956-S 61966-S	61936-S 61947-S 61957-S 61967-S	61937-S 61948-S 61958-S 61968-S	61938-S 61949-S 61959-S 61969-S	61939-S 61950-S 61960-S 61970-S	61940-S 61951-S 61961-S 61971-S	61941-S 61952-S 61962-S 61972-S	61942-S 61953-S 61963-S 61973-S	61943-S 61954-S 61964-S 61974-S	61944-S 61955-S 61965-S 61975-S

NOTES:
For General Specifications see Page G-950.01. For Finishes see Addendum.
MATERIAL: M-1A14 Steel

FORD MOTOR COMPANY
STANDARD PARTS

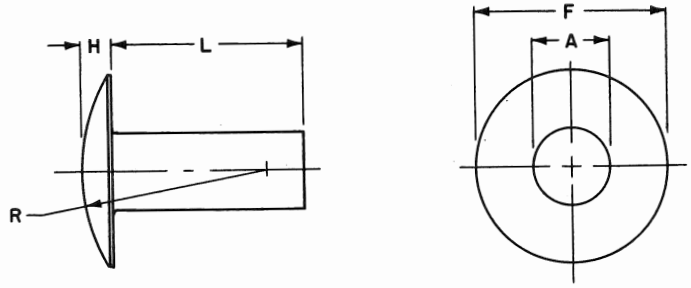

		1/16	3/32	1/8	5/32	3/16	7/32	1/4	9/32	5/16	11/32	3/8	7/16	1/2
A	Body Diameter	.065 .060	.096 .090	.127 .121	.158 .152	.191 .182	.222 .213	.253 .244	.285 .273	.317 .305	.348 .336	.380 .365	.443 .428	.506 .488
F	Head Diameter	.150 .138	.226 .206	.297 .277	.368 .348	.442 .422	.515 .495	.590 .560	.661 .631	.732 .702	.806 .776	.878 .848	1.020 .990	1.165 1.135
H	Head Thickness	.022 .020	.038 .026	.048 .036	.059 .045	.069 .055	.080 .066	.091 .075	.103 .085	.113 .095	.124 .104	.135 .115	.157 .135	1.164 1.123
R	Head Radius	.157	.239	.314	.392	.470	.555	.628	.706	.784	.862	.942	1.098	1.256

FORD PART NUMBERS

L LENGTH														
1 3/8 1 1/2 1 5/8 1 3/4				61976-S 61986-S	61977-S 61987-S 61996-S 62005-S	61978-S 61988-S 61997-S 62006-S	61979-S 61989-S 61998-S 62007-S	61980-S 61990-S 61999-S 62008-S	61981-S 61991-S 62000-S 62009-S	61982-S 61992-S 62001-S 62010-S	61983-S 61993-S 62002-S 62011-S	61984-S 61994-S 62003-S 62012-S	61985-S 61995-S 62004-S 62013-S
1 7/8 2 2 1/8 2 1/4					62014-S 62023-S	62015-S 62024-S 62032-S 62040-S	62016-S 62025-S 62033-S 62041-S	62017-S 62026-S 62034-S 62042-S	62018-S 62027-S 62035-S 62043-S	62019-S 62028-S 62036-S 62044-S	62020-S 62029-S 62037-S 62045-S	62021-S 62030-S 62038-S 62046-S	62022-S 62031-S 62039-S 62047-S
2 3/8 2 1/2 2 5/8 2 3/4						62048-S 62056-S 62064-S 62072-S	62049-S 62057-S 62065-S 62073-S	62050-S 62058-S 62066-S 62074-S	62051-S 62059-S 62067-S 62075-S	62052-S 62060-S 62068-S 62076-S	62053-S 62061-S 62069-S 62077-S	62054-S 62062-S 62070-S 62078-S	62055-S 62063-S 62071-S 62079-S
2 7/8 3 3 1/4 3 1/2						62080-S 62088-S 62096-S 62104-S	62081-S 62089-S 62097-S 62105-S	62082-S 62090-S 62098-S 62106-S	62083-S 62091-S 62099-S 62107-S	62084-S 62092-S 62100-S 62108-S	62085-S 62093-S 62101-S 62109-S	62086-S 62094-S 62102-S 62110-S	62087-S 62095-S 62103-S 62111-S
3 3/4 4 4 1/4 4 1/2						62112-S 62120-S 62128-S 62136-S	62113-S 62121-S 62129-S 62137-S	62114-S 62122-S 62130-S 62138-S	62115-S 62123-S 62131-S 62139-S	62116-S 62124-S 62132-S 62140-S	62117-S 62125-S 62133-S 62141-S	62118-S 62126-S 62134-S 62142-S	62119-S 62127-S 62135-S 62143-S

NOTES:
For General Specifications see Page G-950.01. For Finishes see Addendum.
MATERIAL: M-1A14 Steel

FORD MOTOR COMPANY
STANDARD PARTS

SPLIT RIVETS — FLAT C'SUNK HEAD

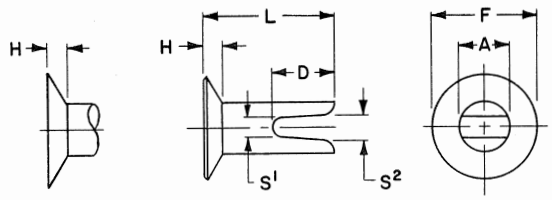

		1/8				9/64					
A	Body Diameter	.127-.117				.151-.141					
F	Head Diameter	.224-.214				.318-.308					
H	Head Thickness	.036-.026				.052-.042					
S¹	Slot Width - Inside	.040	.040	.040	.040	.050	.050	.050	.050	.050	.052
S²	Slot Width - End	.047	.052	.057	.057	.060	.073	.078	.081	.083	.077
T	Slot Depth	.156	.219	.281	.313	.156	.219	.281	.344	.344	.406
L	LENGTH	FORD PART NUMBERS									
	5/16 3/8	62600-S 62604-S	62601-S 62605-S	62606-S		62602-S 62607-S	62603-S 62608-S	62609-S			
	7/16 1/2 9/16 5/8	62610-S 62618-S 62628-S 62638-S	62611-S 62619-S 62629-S 62639-S	62612-S 62620-S 62630-S 62640-S	62613-S 62621-S 62631-S 62641-S	62614-S 62622-S 62632-S 62642-S	62615-S 62623-S 62633-S 62643-S	62616-S 62624-S 62634-S 62644-S	62617-S 62625-S 62635-S 62645-S	62626-S 62636-S 62646-S	62627-S 62637-S 62647-S
	11/16 3/4 13/16 7/8	62648-S 62658-S 62668-S 62678-S	62649-S 62659-S 62669-S 62679-S	62650-S 62660-S 62670-S 62680-S	62651-S 62661-S 62671-S 62681-S	62652-S 62662-S 62672-S 62682-S	62653-S 62663-S 62673-S 62683-S	62654-S 62664-S 62674-S 62684-S	62655-S 62665-S 62675-S 62685-S	62656-S 62666-S 62676-S 62686-S	62657-S 62667-S 62677-S 62687-S
	15/16 1 1 1/16 1 1/8	62688-S 62698-S	62689-S 62699-S 62708-S 62716-S	62690-S 62700-S 62709-S 62717-S	62691-S 62701-S 62710-S 62718-S	62692-S 62702-S	62693-S 62703-S 62711-S 62719-S	62694-S 62704-S 62712-S 62720-S	62695-S 62705-S 62713-S 62721-S	62696-S 62706-S 62714-S 62722-S	62697-S 62707-S 62715-S 62723-S

		9/64						3/16			
A	Body Diameter	.151-.141						.200-.185			
F	Head Diameter	.380-.370						.443-.433			
H	Head Thickness	.052-.042						.052-.042			
S¹	Slot Width - Inside	.050	.050	.050	.050	.050	.052	.065	.065	.065	.065
S²	Slot Width - End	.060	.073	.078	.081	.083	.077	.120	.125	.127	.130
T	Slot Depth	.156	.219	.281	.344	.344	.406	.219	.281	.313	.375
L	LENGTH	FORD PART NUMBERS									
	5/16 3/8	62725-S 62728-S	62726-S 62729-S	62730-S				62727-S 62731-S	62732-S		
	7/16 1/2 9/16 5/8	62733-S 62741-S 62751-S 62761-S	62734-S 62742-S 62752-S 62762-S	62735-S 62743-S 62753-S 62763-S	62736-S 62744-S 62754-S 62764-S	62737-S 62745-S 62755-S 62765-S	62746-S 62756-S 62766-S	62738-S 62747-S 62757-S 62767-S	62739-S 62748-S 62758-S 62768-S	62740-S 62749-S 62759-S 62769-S	62750-S 62760-S 62770-S
	11/16 3/4 13/16 7/8	62771-S 62781-S 62791-S 62801-S	62772-S 62782-S 62792-S 62802-S	62773-S 62783-S 62793-S 62803-S	62774-S 62784-S 62794-S 62804-S	62775-S 62785-S 62795-S 62805-S	62776-S 62786-S 62796-S 62806-S	62777-S 62787-S 62797-S 62807-S	62778-S 62788-S 62798-S 62808-S	62779-S 62789-S 62799-S 62809-S	62780-S 62790-S 62800-S 62810-S
	15/16 1 1 1/16 1 1/8	62811-S 62821-S	62812-S 62822-S 62831-S 62839-S	62813-S 62823-S 62832-S 62840-S	62814-S 62824-S 62833-S 62841-S	62815-S 62825-S 62834-S 62842-S	62816-S 62826-S 62835-S 62843-S	62817-S 62827-S	62818-S 62828-S 62836-S 62844-S	62819-S 62829-S 62837-S 62845-S	62820-S 62830-S 62838-S 62846-S

NOTES:

For General Specification See Page G-950.01. For Finishes See Addendum.
MATERIAL: M-1A14 Steel.
Top of head may be slightly chamfered as indicated.
S^1 and S^2 has a tolerance of ±.005; T ±.016.

FORD MOTOR COMPANY
STANDARD PARTS

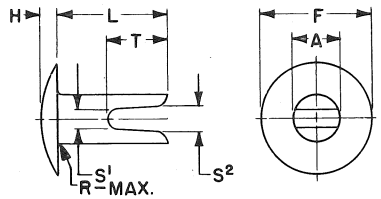

		1/8				9/64						3/16				
A	Body Diameter	.127-.117				.151-.141						.200-.185				
F	Head Diameter	.224-.214				.317-.307						.349-.339				
H	Head Thickness	.036-.026				.052-.042						.068-.058				
R	Radius-Maximum	.005				.010						.015				
S^1	Slot Width - Inside	.040	.040	.040	.040	.050	.050	.050	.050	.050	.052	.065	.065	.065	.065	.068
S^2	Slot Width - End	.047	.052	.057	.057	.060	.073	.078	.081	.083	.077	.120	.125	.127	.130	.133
T	Slot Depth	.156	.219	.281	.313	.156	.219	.281	.344	.344	.406	.219	.281	.313	.375	.438

L LENGTH — FORD PART NUMBERS — MATERIAL: M-1A14 Steel

L	1/8				9/64						3/16				
1/4	62850-S 62855-S	62851-S 62856-S	62857-S		62852-S 62858-S	62853-S 62859-S	62860-S				62854-S 62861-S	62862-S			
3/8	62863-S 62875-S 62889-S 62904-S	62864-S 62876-S 62890-S 62905-S	62865-S 62877-S 62891-S 62906-S	62866-S 62878-S 62892-S 62907-S	62867-S 62879-S 62893-S 62908-S	62868-S 62880-S 62894-S 62909-S	62869-S 62881-S 62895-S 62910-S	62870-S 62882-S 62896-S 62911-S	62871-S 62883-S 62897-S 62912-S	62884-S 62898-S 62913-S	62872-S 62885-S 62899-S 62914-S	62873-S 62886-S 62900-S 62915-S	62874-S 62887-S 62901-S 62916-S	62888-S 62902-S 62917-S	62903-S 62918-S
5/8	62919-S 62934-S 62949-S 62964-S	62920-S 62935-S 62950-S 62965-S	62921-S 62936-S 62951-S 62966-S	62922-S 62937-S 62952-S 62967-S	62923-S 62938-S 62953-S 62968-S	62924-S 62939-S 62954-S 62969-S	62925-S 62940-S 62955-S 62970-S	62926-S 62941-S 62956-S 62971-S	62927-S 62942-S 62957-S 62972-S	62928-S 62943-S 62958-S 62973-S	62929-S 62944-S 62959-S 62974-S	62930-S 62945-S 62960-S 62975-S	62931-S 62946-S 62961-S 62976-S	62932-S 62947-S 62962-S 62977-S	62933-S 62948-S 62963-S 62978-S
7/8	62979-S 62994-S 63009-S 63024-S	62980-S 62995-S 63010-S 63025-S	62981-S 62996-S 63011-S 63026-S	62982-S 62997-S 63012-S 63027-S	62983-S 62998-S 63013-S 63028-S	62984-S 62999-S 63014-S 63029-S	62985-S 63000-S 63015-S 63030-S	62986-S 63001-S 63016-S 63031-S	62987-S 63002-S 63017-S 63032-S	62988-S 63003-S 63018-S 63033-S	62989-S 63004-S 63019-S 63034-S	62990-S 63005-S 63020-S 63035-S	62991-S 63006-S 63021-S 63036-S	62992-S 63007-S 63022-S 63037-S	62993-S 63008-S 63023-S 63038-S

L LENGTH — FORD PART NUMBERS — MATERIAL: SAE-72 Brass

L	1/8				9/64						3/16				
1/4	63050-S 63055-S	63051-S 63056-S	63057-S		63052-S 63058-S	63053-S 63059-S	63060-S				63054-S 63061-S	63062-S			
3/8	63063-S 63075-S 63089-S 63104-S	63064-S 63076-S 63090-S 63105-S	63065-S 63077-S 63091-S 63106-S	63066-S 63078-S 63092-S 63107-S	63067-S 63079-S 63093-S 63108-S	63068-S 63080-S 63094-S 63109-S	63069-S 63081-S 63095-S 63110-S	63070-S 63082-S 63096-S 63111-S	63071-S 63083-S 63097-S 63112-S	63084-S 63098-S 63113-S	63072-S 63085-S 63099-S 63114-S	63073-S 63086-S 63100-S 63115-S	63074-S 63087-S 63101-S 63116-S	63088-S 63102-S 63117-S	63103-S 63118-S
5/8	63119-S 63134-S 63149-S 63164-S	63120-S 63135-S 63150-S 63165-S	63121-S 63136-S 63151-S 63166-S	63122-S 63137-S 63152-S 63167-S	63123-S 63138-S 63153-S 63168-S	63124-S 63139-S 63154-S 63169-S	63125-S 63140-S 63155-S 63170-S	63126-S 63141-S 63156-S 63171-S	63127-S 63142-S 63157-S 63172-S	63128-S 63143-S 63158-S 63173-S	63129-S 63144-S 63159-S 63174-S	63130-S 63145-S 63160-S 63175-S	63131-S 63146-S 63161-S 63176-S	63132-S 63147-S 63162-S 63177-S	63133-S 63148-S 63163-S 63178-S
7/8	63179-S 63194-S 63209-S 63224-S	63180-S 63195-S 63210-S 63225-S	63181-S 63196-S 63211-S 63226-S	63182-S 63197-S 63212-S 63227-S	63183-S 63198-S 63213-S 63228-S	63184-S 63199-S 63214-S 63229-S	63185-S 63200-S 63215-S 63230-S	63186-S 63201-S 63216-S 63231-S	63187-S 63202-S 63217-S 63232-S	63188-S 63203-S 63218-S 63233-S	63189-S 63204-S 63219-S 63234-S	63190-S 63205-S 63220-S 63235-S	63191-S 63206-S 63221-S 63236-S	63192-S 63207-S 63222-S 63237-S	63193-S 63208-S 63223-S 63238-S

NOTES:

For General Specifications See Page G-950.01. For Finishes See Addendum.
S^1 and S^2 have a Tolerance of ±.005; T. ±.016.

FORD MOTOR COMPANY
STANDARD PARTS

SEMI-TUBULAR RIVETS — FLAT C'SUNK HEAD

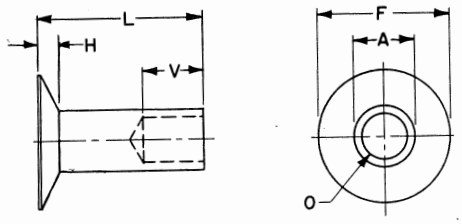

		5/64	3/32	7/64	1/8	9/64	5/32	11/64	3/16
A	Body Diameter	.091 .085	.101 .095	.114 .108	.126 .120	.148 .142	.162 .155	.176 .168	.191 .181
F	Head Diameter	.192 .182	.213 .203	.234 .224	.255 .245	.318 .308	.339 .329	.359 .349	.380 .370
H	Head Thickness	.026 .022	.036 .026	.036 .026	.036 .026	.052 .042	.052 .042	.052 .042	.052 .042
O	Drill Size	1/16 (.0625)	#49 (.073)	#47 (.079)	#44 (.086)	#40 (.098)	#34 (.111)	#31 (.120)	#29 (.136)
V	Drill Depth	.046	.046	.062	.091	.125	.125	.125	.140

FORD PART NUMBERS

L LENGTH	5/64	3/32	7/64	1/8	9/64	5/32	11/64	3/16
5/32 3/16 7/32	64128-S 64130-S 64133-S	64129-S 64131-S 64134-S	64961-S 64132-S 64135-S	64962-S 64965-S 64968-S	64963-S 64966-S	64964-S 64967-S		
1/4 9/32 5/16 11/32	64136-S 64139-S 64143-S 64150-S	64137-S 64140-S 64144-S 64151-S	64138-S 64141-S 64145-S 64152-S	64102-S 64142-S 64146-S 64153-S	64103-S 64107-S 64147-S 64154-S	64104-S 64108-S 64148-S 64155-S	64105-S 64109-S 64149-S 64156-S	64106-S 64110-S 64115-S 64157-S
3/8 13/32 7/16 15/32	64158-S 64166-S 64174-S 64182-S	64159-S 64167-S 64175-S 64183-S	64160-S 64168-S 64176-S 64184-S	64161-S 64169-S 64177-S 64185-S	64162-S 64170-S 64178-S 64186-S	64163-S 64171-S 64179-S 64187-S	64164-S 64172-S 64180-S 64188-S	64165-S 64173-S 64181-S 64189-S
1/2 17/32 9/16 19/32		64190-S 64197-S 64204-S 64211-S	64191-S 64198-S 64205-S 64212-S	64192-S 64199-S 64206-S 64213-S	64193-S 64200-S 64207-S 64214-S	64194-S 64201-S 64208-S 64215-S	64195-S 64202-S 64209-S 64216-S	64196-S 64203-S 64210-S 64217-S
5/8 21/32 11/16 23/32			64218-S 64224-S 64230-S 64236-S	64219-S 64225-S 64231-S 64237-S	64220-S 64226-S 64232-S 64238-S	64221-S 64227-S 64233-S 64239-S	64222-S 64228-S 64234-S 64240-S	64223-S 64229-S 64235-S 64241-S
3/4 13/16 7/8 15/16				64242-S 64247-S 64252-S 64257-S	64243-S 64248-S 64253-S 64258-S	64244-S 64249-S 64254-S 64259-S	64245-S 64250-S 64255-S 64260-S	64246-S 64251-S 64256-S 64261-S
1 1 1/16 1 1/8 1 3/16				64262-S 64267-S 64272-S 64277-S	64263-S 64268-S 64273-S 64278-S	64264-S 64269-S 64274-S 64279-S	64265-S 64270-S 64275-S 64280-S	64266-S 64271-S 64276-S 64281-S
1 1/4 1 5/16 1 3/8 1 7/16				64282-S 64287-S 64292-S 64297-S	64283-S 64288-S 64293-S 64298-S	64284-S 64289-S 64294-S 64299-S	64285-S 64290-S 64295-S 64300-S	64286-S 64291-S 64296-S 64301-S
1 1/2 1 9/16 1 5/8 1 11/16				64302-S 64307-S 64312-S 64317-S	64303-S 64308-S 64313-S 64318-S	64304-S 64309-S 64314-S 64319-S	64305-S 64310-S 64315-S 64320-S	64306-S 64311-S 64316-S 64321-S
1 3/4 2 2 1/8 2 1/4				64322-S 64327-S 64332-S 64337-S	64323-S 64328-S 64333-S 64338-S	64324-S 64329-S 64334-S 64339-S	64325-S 64330-S 64335-S 64340-S	64326-S 64331-S 64336-S 64341-S

NOTES:
For General Specifications See Page G-950.01. For Finishes See Addendum.
MATERIAL: M-1A14 Steel.

FORD MOTOR COMPANY
STANDARD PARTS

SEMI-TUBULAR RIVETS

FLAT C'SUNK HEAD

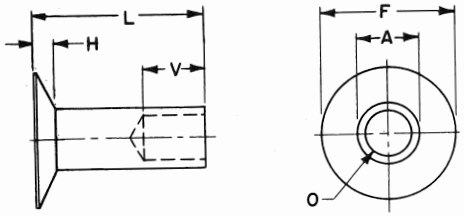

		5/64	3/32	7/64	1/8	9/64	5/32	11/64	3/16
A	Body Diameter	.091 .085	.101 .095	.114 .108	.126 .120	.148 .142	.162 .155	.176 .168	.191 .181
F	Head Diameter	.192 .182	.213 .203	.234 .224	.255 .245	.318 .308	.339 .329	.359 .349	.380 .370
H	Head Thickness	.026 .022	.036 .026	.036 .026	.036 .026	.052 .042	.052 .042	.052 .042	.052 .042
O	Drill Size	1/16 (.0625)	#49 (.073)	#47 (.079)	#44 (.086)	#40 (.098)	#34 (.111)	#31 (.120)	#29 (.136)
V	Drill Depth	.046	.046	.062	.091	.125	.125	.125	.140

L LENGTH	FORD PART NUMBERS							
5/32 3/16 7/32 1/4	64628-S 64630-S 64633-S 64636-S	64629-S 64631-S 64634-S 64637-S	64969-S 64632-S 64635-S 64638-S	64970-S 64975-S 64980-S 64984-S	64971-S 64976-S 64981-S	64972-S 64977-S 64982-S	64973-S	64974-S
9/32 5/16 11/32 3/8	64639-S 64643-S 64650-S 64658-S	64640-S 64644-S 64651-S 64659-S	64641-S 64645-S 64652-S 64660-S	64642-S 64646-S 64653-S 64661-S	64985-S 64647-S 64654-S 64662-S	64986-S 64648-S 64655-S 64663-S	64978-S 64649-S 64656-S 64664-S	64979-S 64683-S 64657-S 64665-S
13/32 7/16 15/32 1/2	64666-S 64674-S 64682-S	64667-S 64675-S 64683-S 64690-S	64668-S 64676-S 64684-S 64691-S	64669-S 64677-S 64685-S 64692-S	64670-S 64678-S 64686-S 64693-S	64671-S 64679-S 64687-S 64694-S	64672-S 64680-S 64688-S 64695-S	64673-S 64681-S 64689-S 64696-S
17/32 9/16 19/32 5/8		64697-S 64704-S 64711-S	64698-S 64705-S 64712-S 64718-S	64699-S 64706-S 64713-S 64719-S	64700-S 64707-S 64714-S 64720-S	64701-S 64708-S 64715-S 64721-S	64702-S 64709-S 64716-S 64722-S	64703-S 64710-S 64717-S 64723-S
21/32 11/16 23/32 3/4			64724-S 64730-S 64736-S	64725-S 64731-S 64737-S 64742-S	64726-S 64732-S 64738-S 64743-S	64727-S 64733-S 64739-S 64744-S	64728-S 64734-S 64740-S 64745-S	64729-S 64735-S 64741-S 64746-S
13/16 7/8 15/16 1				64747-S 64752-S 64757-S 64762-S	64748-S 64753-S 64758-S 64763-S	64749-S 64754-S 64759-S 64764-S	64750-S 64755-S 64760-S 64765-S	64751-S 64756-S 64761-S 64766-S
1 1/16 1 1/8 1 3/16 1 1/4				64767-S 64772-S	64768-S 64773-S 64777-S 64781-S	64769-S 64774-S 64778-S 64782-S	64770-S 64775-S 64779-S 64783-S	64771-S 64776-S 64780-S 64784-S

NOTES:
For General Specifications See Page G-950.01. For Finishes See Addendum.
MATERIAL: SAE-72 Brass.

FORD MOTOR COMPANY
STANDARD PARTS

SEMI-TUBULAR RIVETS — OVAL HEAD

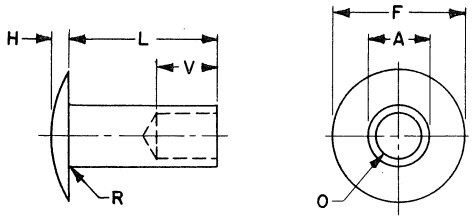

		5/64	3/32	7/64	1/8	9/64	5/32	11/64	3/16
A	Body Diameter	.091 .085	.101 .095	.114 .108	.126 .120	.148 .142	.162 .155	.176 .168	.191 .181
F	Head Diameter	.150 .144	.192 .182	.208 .198	.224 .214	.318 .308	.339 .329	.360 .350	.380 .370
H	Head Thickness	.026 .022	.036 .026	.036 .026	.036 .026	.052 .042	.052 .042	.068 .058	.068 .058
O	Drill Size	1/16 (.0625)	#49 (.073)	#47 (.079)	#44 (.086)	#40 (.098)	#34 (.111)	#31 (.120)	#29 (.136)
V	Drill Depth	.046	.046	.062	.091	.125	.125	.125	.140
R	Radius	.005	.005	.005	.005	.010	.010	.015	.015
L	LENGTH				FORD PART NUMBERS				
	3/32 1/8 5/32 3/16	63239-S 63281-S 63284-S 63287-S	63240-S 63282-S 63285-S 63288-S	63241-S 63283-S 63286-S 63289-S	63242-S 63745-S 63748-S 63751-S	63746-S 63749-S 63752-S	63747-S 63750-S 63753-S	63754-S	63755-S
	7/32 1/4 9/32 5/16	63290-S 63294-S 63298-S 63306-S	63291-S 63295-S 63299-S 63307-S	63292-S 63296-S 63300-S 63308-S	63293-S 63297-S 63301-S 63309-S	63756-S 63760-S 63302-S 63310-S	63757-S 63761-S 63303-S 63311-S	63758-S 63762-S 63304-S 63312-S	63759-S 63763-S 63305-S 63313-S
	11/32 3/8 13/32 7/16	63314-S 63322-S 63330-S 63338-S	63315-S 63323-S 63331-S 63339-S	63316-S 63324-S 63332-S 63340-S	63317-S 63325-S 63333-S 63341-S	63318-S 63326-S 63334-S 63342-S	63319-S 63327-S 63335-S 63343-S	63320-S 63328-S 63336-S 63344-S	63321-S 63329-S 63337-S 63345-S
	15/32 1/2 17/32 9/16		63346-S 63353-S 63360-S 63367-S	63347-S 63354-S 63361-S 63368-S	63348-S 63355-S 63362-S 63369-S	63349-S 63356-S 63363-S 63370-S	63350-S 63357-S 63364-S 63371-S	63351-S 63358-S 63365-S 63372-S	63352-S 63359-S 63366-S 63373-S
	19/32 5/8 21/32 11/16			63374-S 63380-S 63386-S 63392-S	63375-S 63381-S 63387-S 63393-S	63376-S 63382-S 63388-S 63394-S	63377-S 63383-S 63389-S 63395-S	63378-S 63384-S 63390-S 63396-S	63379-S 63385-S 63391-S 63397-S
	23/32 3/4 13/16 7/8				63398-S 63403-S 63408-S 63413-S	63399-S 63404-S 63409-S 63414-S	63400-S 63405-S 63410-S 63415-S	63401-S 63406-S 63411-S 63416-S	63402-S 63407-S 63412-S 63417-S
	15/16 1 1 1/16 1 1/8				63418-S 63423-S 63428-S 63433-S	63419-S 63424-S 63429-S 63434-S	63420-S 63425-S 63430-S 63435-S	63421-S 63426-S 63431-S 63436-S	63422-S 63427-S 63432-S 63437-S
	1 3/16 1 1/4 1 5/16 1 3/8				63438-S 63443-S 63448-S 63453-S	63439-S 63444-S 63449-S 63454-S	63440-S 63445-S 63450-S 63455-S	63441-S 63446-S 63451-S 63456-S	63442-S 63447-S 63452-S 63457-S
	1 7/16 1 1/2 1 9/16 1 5/8				63458-S 63463-S 63468-S 63473-S	63459-S 63464-S 63469-S 63474-S	63460-S 63465-S 63470-S 63475-S	63461-S 63466-S 63471-S 63476-S	63462-S 63467-S 63472-S 63477-S
	1 11/16 1 3/4 1 7/8 2				63478-S	63479-S 63483-S 63487-S 63491-S	63480-S 63484-S 63488-S 63492-S	63481-S 63485-S 63489-S 63493-S	63482-S 63486-S 63490-S 63494-S

NOTES:
For General Specifications See Page G-950.01. For Finishes See Addendum.
MATERIAL: M-1A14 Steel.

FORD MOTOR COMPANY
STANDARD PARTS

SEMI-TUBULAR RIVETS — OVAL HEAD

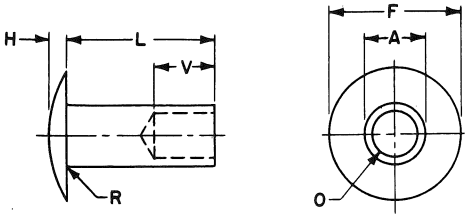

		5/64	3/32	7/64	1/8	9/64	5/32	11/64	3/16
A	Body Diameter	.091 .085	.101 .095	.114 .108	.126 .120	.148 .142	.162 .155	.176 .168	.191 .181
F	Head Diameter	.150 .144	.192 .182	.208 .198	.224 .214	.318 .308	.339 .329	.360 .350	.380 .370
H	Head Thickness	.026 .022	.036 .026	.036 .026	.036 .026	.052 .042	.052 .042	.068 .058	.068 .058
O	Drill Size	1/16 (.0625)	#49 (.073)	#47 (.079)	#44 (.086)	#40 (.098)	#34 (.111)	#31 (.120)	#29 (.136)
V	Drill Depth	.046	.046	.062	.091	.125	.125	.125	.140
R	Radius	.005	.005	.005	.005	.010	.010	.015	.015
L	LENGTH				FORD PART NUMBERS				
	3/32 1/8 5/32 3/16	63243-S 63781-S 63784-S 63787-S	63244-S 63782-S 63785-S 63788-S	63245-S 63783-S 63786-S 63789-S	63246-S 63764-S 63767-S 63770-S	63765-S 63768-S 63771-S	63766-S 63769-S 63772-S	63773-S	63774-S
	7/32 1/4 9/32 5/16	63790-S 63794-S 63798-S 63806-S	63791-S 63795-S 63799-S 63807-S	63792-S 63796-S 63800-S 63808-S	63793-S 63797-S 63801-S 63809-S	63775-S 63779-S 63802-S 63810-S	63776-S 63780-S 63803-S 63811-S	63777-S 64100-S 63804-S 63812-S	63778-S 64101-S 63805-S 63813-S
	11/32 3/8 13/32 7/16	63814-S 63822-S 63830-S 63838-S	63815-S 63823-S 63831-S 63839-S	63816-S 63824-S 63832-S 63840-S	63817-S 63825-S 63833-S 63841-S	63818-S 63826-S 63834-S 63842-S	63819-S 63827-S 63835-S 63843-S	63820-S 63828-S 63836-S 63844-S	63821-S 63829-S 63837-S 63845-S
	15/32 1/2 17/32 9/16		63846-S 63853-S 63860-S 63867-S	63847-S 63854-S 63861-S 63868-S	63848-S 63855-S 63862-S 63869-S	63849-S 63856-S 63863-S 63870-S	63850-S 63857-S 63864-S 63871-S	63851-S 63858-S 63865-S 63872-S	63852-S 63859-S 63866-S 63873-S
	19/32 5/8 21/32 11/16			63874-S 63880-S 63886-S 63892-S	63875-S 63881-S 63887-S 63893-S	63876-S 63882-S 63888-S 63894-S	63877-S 63883-S 63889-S 63895-S	63878-S 63884-S 63890-S 63896-S	63879-S 63885-S 63891-S 63897-S
	23/32 3/4 13/16 7/8				63898-S 63903-S 63908-S 63913-S	63899-S 63904-S 63909-S 63914-S	63900-S 63905-S 63910-S 63915-S	63901-S 63906-S 63911-S 63916-S	63902-S 63907-S 63912-S 63917-S
	15/16 1 1 1/16 1 1/8						63918-S	63919-S 63921-S	63920-S 63922-S 63923-S 63924-S

NOTES:

For General Specifications See Page G-950.01. For Finishes See Addendum.
MATERIAL: SAE-72 Brass.

FORD MOTOR COMPANY
STANDARD PARTS

TUBULAR RIVETS

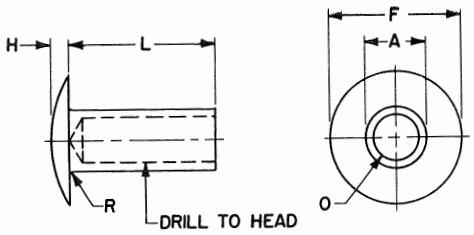

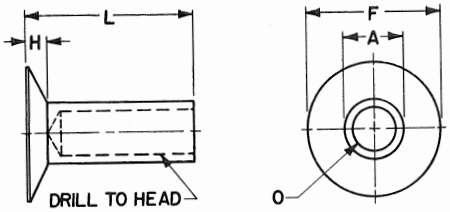

OVAL HEAD

		M-1A14 STEEL	
		9/64	3/16
A	Body Diameter	.148 .142	.191 .181
F	Head Diameter	.318 .308	.380 .370
H	Head Thickness	.052 .042	.068 .058
O	Drill Size	#37 (.104)	#29 (.136)
R	Radius	.010	.015

FLAT C'SUNK HEAD

		SAE 72 BRASS		M-1A14 STEEL	
		9/64	3/16	9/64	3/16
A	Body Diameter	.148 .142	.191 .181	.148 .142	.191 .181
F	Head Diameter	.318 .308	.380 .370	.318 .308	.380 .370
H	Head Thickness	.052 .042	.052 .042	.052 .042	.052 .042
O	Drill Size	#37 (.104)	#29 (.136)	#37 (.104)	#29 (.136)

L LENGTH	FORD PART NUMBERS	
1/4 9/32	64593-S 64595-S	64594-S 64696-S
5/16 11/32 3/8 13/32	64597-S 64599-S 64601-S 64603-S	64598-S 64600-S 64602-S 64604-S
7/16 15/32 1/2 17/32	64605-S 64607-S 64609-S 64611-S	64606-S 64608-S 64610-S 64612-S
9/16 19/32 5/8 21/32	64613-S 64615-S 64617-S 64619-S	64614-S 64616-S 64618-S 64620-S
11/16 23/32 3/4	64621-S 64623-S 64625-S	64622-S 64624-S 64626-S

L LENGTH	FORD PART NUMBERS			
3/16 7/32 1/4 9/32	64111-S 64797-S 64805-S 64813-S	64808-S 64816-S	64112-S 64114-S	64113-S 64116-S
5/16 11/32 3/8 13/32	64821-S 64829-S 64837-S 64845-S	64824-S 64832-S 64840-S 64848-S	64117-S 64119-S 64121-S 64123-S	64118-S 64120-S 64122-S 64124-S
7/16 15/32 1/2 17/32	64853-S 64861-S 64868-S	64856-S 64864-S 64871-S	64125-S 64127-S 64343-S 64345-S	64126-S 64342-S 64344-S 64346-S
9/16 19/32 5/8 21/32			64347-S 64349-S 64351-S 64353-S	64348-S 64350-S 64352-S 64354-S
11/16 23/32 3/4			64355-S 64357-S 64359-S	64356-S 64358-S 64592-S

NOTES:
For General Specifications See Page G-950.01. For Finishes See Addendum.
MATERIAL: S.A.E.-72 Brass or M-1A14 Steel.
Drill Depths for Drilled to Head Rivets. Lengths up to and including 11/32 drill to head. Lengths 3/8 to 15/32 long, drill 5/16 deep. Lengths 1/2 and longer drill 3/8 deep.

GENERAL SPECIFICATIONS

MATERIAL: Refer to Material Specifications.

HEADS: Because the heads of rivets are not machined or trimmed, the circumference may be somewhat irregular and edges may be rounded or flat.

FILLETS: For rivets other than the countersunk type, fillets under the head are allowable as follows: Sizes up to 1/2 inch diameter, 1/32 inch radius; Sizes 1/2 inch diameter and larger, 1/16 inch radius.

A slight taper resulting from extrusion of the hole is permissable on tubular and semi-tubular rivets.

TOLERANCE on rivet lengths shall be plus or minus .015 unless otherwise specified.

LIMITS: Allowable variation on dimensions controlling finished surfaces is plus or minus .010 inches unless otherwise specified.

The finished rivet shall be free from injurious defects.

NOTES: The specifications in this section were developed without considering whether patents may or may not be involved. In all cases, therefore, the supplier shall be required to assume patent liability.

FORD MOTOR COMPANY
STANDARD PARTS

SECTION H

NAILS—TACKS

H
NAILS
TACKS

CASING NAILS

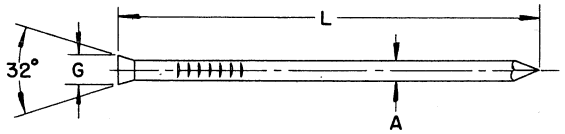

SMOOTH

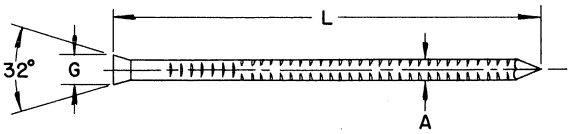

BARBED

		2d	3d	4d	5d	6d	7d	8d
A	Body Diameter	#15 1/2 (.0672)	#14 1/2 (.076)	#14 (.080)	#14 (.080)	#12 1/2 (.098)	#12 1/2 (.098)	#11 1/2 (.113)
G	Head Diameter	.094	.109	.125	.125	.141	.141	.156
L	Length	1	1¼	1½	1¾	2	2¼	2½

SMOOTH

Ford Part Numbers	74440-S	74441-S	74442-S	74443-S	74444-S	74445-S	74446-S

BARBED

Ford Part Numbers	74460-S	74461-S	74462-S	74463-S	74464-S	74465-S	74466-S

		9d	10d	12d	16d	20d	30d	40d
A	Body Diameter	#11 1/2 (.113)	#10 1/2 (.127)	#10 1/2 (.127)	#10 (.135)	#9 (.1483)	#9 (.1483)	#8 (.162)
G	Head Diameter	.156	.172	.172	.172	.188	.188	.203
L	Length	2¾	3	3¼	3½	4	4½	5

SMOOTH

Ford Part Numbers	74447-S	74448-S	74449-S	74450-S	74451-S	74452-S	74453-S

BARBED

Ford Part Numbers	74467-S	74468-S	74469-S	74470-S	74471-S	74472-S	74473-S

NOTES:

For Finishes See Addendum.
MATERIAL: Type "L.C.O.H." Steel.

WIRE BRADS

STANDARD PARTS

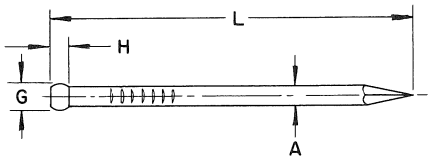

SMOOTH

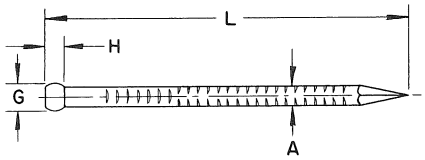

BARBED

		20	19	18	17	16	15	14	13	12	10
A	Body Diameter	.037 .033	.043 .039	.049 .045	.056 .052	.065 .061	.074 .070	.082 .078	.094 .090	.107 .103	.137 .133
G	Head Diameter	.052	.061	.071	.081	.094	.108	.120	.138	.157	.202
H	Head Thickness	.035	.041	.047	.054	.063	.072	.080	.092	.105	.135

L LENGTH — SMOOTH — FORD PART NUMBERS

3/8 1/2	74480-S 74485-S	74481-S 74486-S	74482-S 74487-S	74483-S 74488-S	74484-S 74489-S	74490-S				
5/8 3/4 7/8 1	74491-S 74498-S 74506-S 74515-S	74492-S 74499-S 74507-S 74516-S	74493-S 74500-S 74508-S 74517-S	74494-S 74501-S 74509-S 74518-S	74495-S 74502-S 74510-S 74519-S	74496-S 74503-S 74511-S 74520-S	74497-S 74504-S 74512-S 74521-S	74505-S 74513-S 74522-S	74514-S 74523-S	74524-S
1 1/4 1 1/2 1 3/4 2	74525-S	74526-S	74527-S 74535-S 74543-S	74528-S 74536-S 74544-S	74529-S 74537-S 74545-S 74551-S	74530-S 74538-S 74546-S 74552-S	74531-S 74539-S 74547-S 74553-S	74532-S 74540-S 74548-S 74554-S	74533-S 74541-S 74549-S 74555-S	74534-S 74542-S 74550-S 74556-S
2 1/4 2 1/2 2 3/4 3					74557-S	74558-S	74559-S 74563-S 74567-S 74571-S	74560-S 74564-S 74568-S 74572-S	74561-S 74565-S 74569-S 74573-S	74562-S 74566-S 74570-S 74574-S

L LENGTH — BARBED — FORD PART NUMBERS

3/8 1/2	74580-S 74585-S	74581-S 74586-S	74582-S 74587-S	74583-S 74588-S	74584-S 74589-S	74590-S				
5/8 3/4 7/8 1	74591-S 74598-S 74606-S 74615-S	74592-S 74599-S 74607-S 74616-S	74593-S 74600-S 74608-S 74617-S	74594-S 74601-S 74609-S 74618-S	74595-S 74602-S 74610-S 74619-S	74596-S 74603-S 74611-S 74620-S	74597-S 74604-S 74612-S 74621-S	74605-S 74613-S 74622-S	74614-S 74623-S	74624-S
1 1/4 1 1/2 1 3/4 2	74625-S	74626-S	74627-S 74635-S 74643-S	74628-S 74636-S 74644-S	74629-S 74637-S 74645-S 74651-S	74630-S 74638-S 74646-S 74652-S	74631-S 74639-S 74647-S 74653-S	74632-S 74640-S 74648-S 74654-S	74633-S 74641-S 74649-S 74655-S	74634-S 74642-S 74650-S 74656-S
2 1/4 2 1/2 2 3/4 3					74657-S	74658-S	74659-S 74663-S 74667-S 74671-S	74660-S 74664-S 74668-S 74672-S	74661-S 74665-S 74669-S 74673-S	74662-S 74666-S 74670-S 74674-S

NOTE:
For Finishes See Addendum.
MATERIAL: Type "L.C.O.H." Steel.

FINISHING NAILS

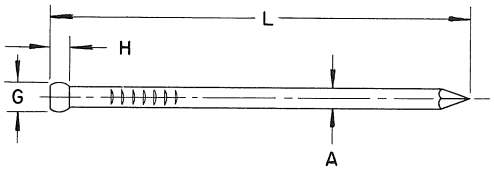

SMOOTH

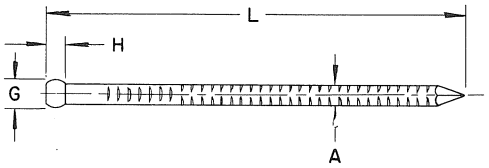

BARBED

		2d	3d	4d	5d	6d	7d
A	Body Diameter	#16 1/2 (.058)	#15 1/2 (.067)	#15 (.072)	#15 (.072)	#13 (.092)	#13 (.092)
G	Head Diameter	.078	.094	.109	.109	.125	.125
H	Head Thickness	.047	.063	.078	.078	.094	.094
L	LENGTH	1	1¼	1½	1¾	2	2¼

SMOOTH

Ford Part Numbers	74680-S	74681-S	74682-S	74683-S	74684-S	74685-S

BARBED

Ford Part Numbers	74695-S	74696-S	74697-S	74698-S	74699-S	74700-S

		8d	9d	10d	12d	16d	20d
A	Body Diameter	#12 1/2 (.098)	#12 1/2 (.098)	#11 1/2 (.113)	#11 1/2 (.113)	#11 (.120)	#10 (.135)
G	Head Diameter	.141	.141	.156	.156	.172	.188
H	Head Thickness	.094	.094	.109	.109	.125	.125
L	LENGTH	2½	2¾	3	3¼	3½	4

SMOOTH

Ford Part Numbers	74686-S	74687-S	74688-S	74689-S	74690-S	74691-S

BARBED

Ford Part Numbers	74701-S	74702-S	74703-S	74704-S	74705-S	74706-S

NOTES:

For Finishes See Addendum.
MATERIAL: Type "L.C.O.H." Steel.

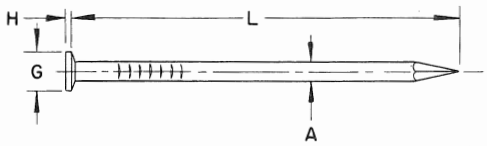

SMOOTH

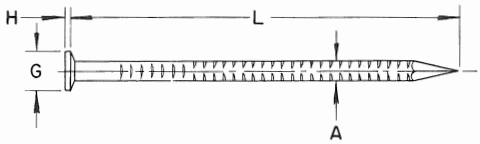

BARBED

		20	19	18	17	16	15	14	13	12	11
A	Body Diameter	.037 .033	.043 .039	.049 .045	.056 .052	.065 .061	.074 .070	.082 .078	.094 .090	.107 .103	.122 .118
G	Head Diameter	.078	.094	.109	.125	.141	.156	.172	.188	.203	.219
H	Head Thickness	.010	.010	.016	.016	.016	.016	.031	.031	.031	.031

L LENGTH **SMOOTH** FORD PART NUMBERS

3/8 1/2 5/8 3/4	74710-S 74715-S 74721-S 74728-S	74711-S 74716-S 74722-S 74729-S	74712-S 74717-S 74723-S 74730-S	74713-S 74718-S 74724-S 74731-S	74714-S 74719-S 74725-S 74732-S	74720-S 74726-S 74733-S	74727-S 74734-S	74735-S		
7/8 1 1 1/4 1 1/2	74736-S 74745-S 74755-S	74737-S 74746-S 74756-S 74765-S	74738-S 74747-S 74757-S 74766-S	74739-S 74748-S 74758-S 74767-S	74740-S 74749-S 74759-S 74768-S	74741-S 74750-S 74760-S 74769-S	74742-S 74751-S 74761-S 74770-S	74743-S 74752-S 74762-S 74771-S	74744-S 74753-S 74763-S 74772-S	74754-S 74764-S 74773-S
1 3/4 2 2 1/4 2 1/2			74774-S	74775-S 74782-S	74776-S 74783-S 74789-S	74777-S 74784-S 74790-S 74795-S	74778-S 74785-S 74791-S 74796-S	74779-S 74786-S 74792-S 74797-S	74780-S 74787-S 74793-S 74798-S	74781-S 74788-S 74794-S 74799-S

L LENGTH **BARBED** FORD PART NUMBERS

3/8 1/2 5/8 3/4	74805-S 74810-S 74816-S 74823-S	74806-S 74811-S 74817-S 74824-S	74807-S 74812-S 74818-S 74825-S	74808-S 74813-S 74819-S 74826-S	74809-S 74814-S 74820-S 74827-S	74815-S 74821-S 74828-S	74822-S 74829-S	74830-S		
7/8 1 1 1/4 1 1/2	74831-S 74840-S 74850-S	74832-S 74841-S 74851-S 74860-S	74833-S 74842-S 74852-S 74861-S	74834-S 74843-S 74853-S 74862-S	74835-S 74844-S 74854-S 74863-S	74836-S 74845-S 74855-S 74864-S	74837-S 74846-S 74856-S 74865-S	74838-S 74847-S 74857-S 74866-S	74839-S 74848-S 74858-S 74867-S	74849-S 74859-S 74868-S
1 3/4 2 2 1/4 2 1/2			74869-S	74870-S 74877-S	74871-S 74878-S 74884-S	74872-S 74879-S 74885-S 74890-S	74873-S 74880-S 74886-S 74891-S	74874-S 74881-S 74887-S 74892-S	74875-S 74882-S 74888-S 74893-S	74876-S 74883-S 74889-S 74894-S

NOTES:

For Finishes See Addendum.
MATERIAL: Type "L.C.O.H." Steel.

FLAT HEAD NAILS

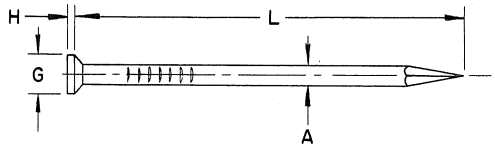

SMOOTH

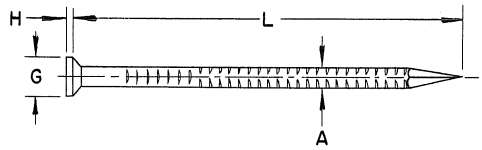

BARBED

		20	19	18	17	16	15	14	13	12	11
A	Body Diameter	.037 .033	.043 .039	.049 .045	.056 .052	.065 .061	.074 .070	.082 .078	.094 .090	.107 .103	.122 .118
G	Head Diameter	.078	.094	.109	.125	.141	.156	.172	.188	.203	.219
H	Head Thickness	.010	.010	.016	.016	.016	.016	.031	.031	.031	.031

L LENGTH — **SMOOTH** — FORD PART NUMBERS

L LENGTH	20	19	18	17	16	15	14	13	12	11
3/8 1/2 5/8 3/4	74900-S 74905-S 74911-S 74918-S	74901-S 74906-S 74912-S 74919-S	74902-S 74907-S 74913-S 74920-S	74903-S 74908-S 74914-S 74921-S	74904-S 74909-S 74915-S 74922-S	74910-S 74916-S 74923-S	74917-S 74924-S	74925-S		
7/8 1 1 1/4 1 1/2	74926-S 74935-S 74945-S 74955-S	74927-S 74936-S 74946-S 74956-S	74928-S 74937-S 74947-S 74957-S	74929-S 74938-S 74948-S 74958-S	74930-S 74939-S 74949-S 74959-S	74931-S 74940-S 74950-S 74960-S	74932-S 74941-S 74951-S 74961-S	74933-S 74942-S 74952-S 74962-S	74934-S 74943-S 74953-S 74963-S	74944-S 74954-S 74964-S
1 3/4 2 2 1/4 2 1/2		74965-S	74966-S 74974-S	74967-S 74975-S 74982-S	74968-S 74976-S 74983-S 74989-S	74969-S 74977-S 74984-S 74990-S	74970-S 74978-S 74985-S 74991-S	74971-S 74979-S 74986-S 74992-S	74972-S 74980-S 74987-S 74993-S	74973-S 74981-S 74988-S 74994-S

L LENGTH — **BARBED** — FORD PART NUMBERS

L LENGTH	20	19	18	17	16	15	14	13	12	11
3/8 1/2 5/8 3/4	75000-S 75005-S 75011-S 75018-S	75001-S 75006-S 75012-S 75019-S	75002-S 75007-S 75013-S 75020-S	75003-S 75008-S 75014-S 75021-S	75004-S 75009-S 75015-S 75022-S	75010-S 75016-S 75023-S	75017-S 75024-S	75025-S		
7/8 1 1 1/4 1 1/2	75026-S 75035-S 75045-S 75055-S	75027-S 75036-S 75046-S 75056-S	75028-S 75037-S 75047-S 75057-S	75029-S 75038-S 75048-S 75058-S	75030-S 75039-S 75049-S 75059-S	75031-S 75040-S 75050-S 75060-S	75032-S 75041-S 75051-S 75061-S	75033-S 75042-S 75052-S 75062-S	75034-S 75043-S 75053-S 75063-S	75044-S 75054-S 75064-S
1 3/4 2 2 1/4 2 1/2		75065-S	75066-S 75074-S	75067-S 75075-S 75082-S	75068-S 75076-S 75083-S 75089-S	75069-S 75077-S 75084-S 75090-S	75070-S 75078-S 75085-S 75091-S	75071-S 75079-S 75086-S 75092-S	75072-S 75080-S 75087-S 75093-S	75073-S 75081-S 75088-S 75094-S

NOTES:

For Finishes See Addendum.
MATERIAL: Type "L.C.O.H." Steel.

CLINCH NAILS

STANDARD PARTS

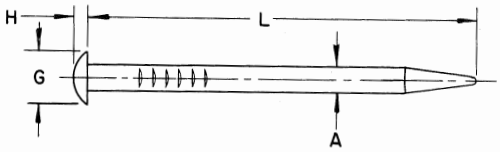

SMOOTH

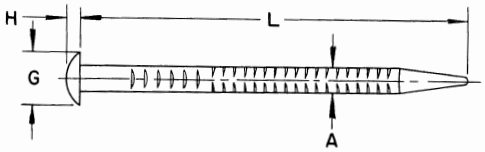

BARBED

		2d	3d	4d	5d	6d	7d
A	Body Diameter	#14 (.080)	#13 (.092)	#12 (.105)	#12 (.105)	#11 (.120)	#11 (.120)
G	Head Diameter	.188	.219	.250	.250	.263	.263
H	Head Radius	.250	.250	.250	.250	.313	.313
L	LENGTH	1	1¼	1½	1¾	2	2¼

SMOOTH

Ford Part Numbers	75100-S	75101-S	75102-S	75103-S	75104-S	75105-S

BARBED

Ford Part Numbers	75113-S	75114-S	75115-S	75116-S	75117-S	75118-S

		8d	9d	10d	12d	16d	20d
A	Body Diameter	#10 (.135)	#10 (.135)	#9 (.148)	#9 (.148)	#8 (.162)	#7 (.177)
G	Head Diameter	.281	.281	.313	.313	.344	.375
H	Head Radius	.313	.313	.313	.313	.375	.375
L	LENGTH	2½	2¾	3	3¼	3½	4

SMOOTH

Ford Part Numbers	75106-S	75107-S	75108-S	75109-S	75110-S	75111-S

BARBED

Ford Part Numbers	75119-S	75120-S	75121-S	75122-S	75123-S	75124-S

NOTES:

For Finishes See Addendum.
MATERIAL: Type "L.C.O.H." Steel.

COUNTERSUNK HEAD NAILS FORD MOTOR COMPANY

STANDARD PARTS

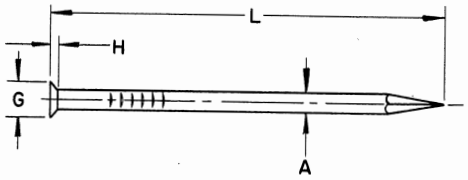

SMOOTH

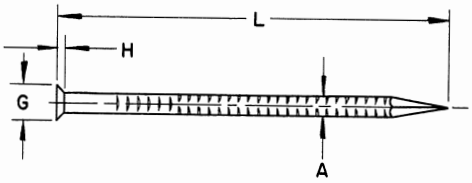

BARBED

		20	19	18	17	16	15	14	13	12	11
A	Body Diameter	.037 .033	.043 .039	.049 .045	.056 .052	.065 .061	.074 .070	.082 .078	.094 .090	.107 .103	.122 .118
G	Head Diameter	.063	.078	.094	.109	.125	.141	.156	.172	.188	.203
H	Head Thickness	.010	.010	.016	.016	.016	.016	.031	.031	.031	.031

L LENGTH — SMOOTH — FORD PART NUMBERS

3/8 1/2 5/8 3/4	75125-S 75130-S 75136-S 75143-S	75126-S 75131-S 75137-S 75144-S	75127-S 75132-S 75138-S 75145-S	75128-S 75133-S 75139-S 75146-S	75129-S 75134-S 75140-S 75147-S	75135-S 75141-S 75148-S	75142-S 75149-S	75150-S		
7/8 1 1 1/4 1 1/2	75151-S 75160-S 75170-S 75180-S	75152-S 75161-S 75171-S 75181-S	75153-S 75162-S 75172-S 75182-S	75154-S 75163-S 75173-S 75183-S	75155-S 75164-S 75174-S 75184-S	75156-S 75165-S 75175-S 75185-S	75157-S 75166-S 75176-S 75186-S	75158-S 75167-S 75177-S 75187-S	75159-S 75168-S 75178-S 75188-S	75169-S 75179-S 75189-S
1 3/4 2 2 1/4 2 1/2		75190-S	75191-S 75199-S	75192-S 75200-S 75207-S	75193-S 75201-S 75208-S 75214-S	75194-S 75202-S 75209-S 75215-S	75195-S 75203-S 75210-S 75216-S	75196-S 75204-S 75211-S 75217-S	75197-S 75205-S 75212-S 75218-S	75198-S 75206-S 75213-S 75219-S

L LENGTH — BARBED — FORD PART NUMBERS

3/8 1/2 5/8 3/4	75225-S 75230-S 75236-S 75243-S	75226-S 75231-S 75237-S 75244-S	75227-S 75232-S 75238-S 75245-S	75228-S 75233-S 75239-S 75246-S	75229-S 75234-S 75240-S 75247-S	75235-S 75241-S 75248-S	75242-S 75249-S	75250-S		
7/8 1 1 1/4 1 1/2	75251-S 75260-S 75270-S 75280-S	75252-S 75261-S 75271-S 75281-S	75253-S 75262-S 75272-S 75282-S	75254-S 75263-S 75273-S 75283-S	75255-S 75264-S 75274-S 75284-S	75256-S 75265-S 75275-S 75285-S	75257-S 75266-S 75276-S 75286-S	75258-S 75267-S 75277-S 75287-S	75259-S 75268-S 75278-S 75288-S	75269-S 75279-S 75289-S
1 3/4 2 2 1/4 2 1/2		75290-S	75291-S 75299-S	75292-S 75300-S 75307-S	75293-S 75301-S 75308-S 75314-S	75294-S 75302-S 75309-S 75315-S	75295-S 75303-S 75310-S 75316-S	75296-S 75304-S 75311-S 75317-S	75297-S 75305-S 75312-S 75318-S	75298-S 75306-S 75313-S 75319-S

NOTES:

For Finishes See Addendum.
MATERIAL: Type "L.C.O.H." Steel.

PRINTED IN U.S.A.
NOVEMBER 1951

ROUND HEAD NAILS

STANDARD PARTS

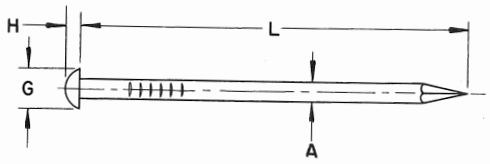

SMOOTH

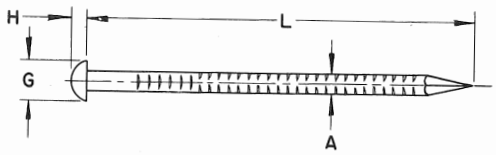

BARBED

		20	19	18	17	16	15	14	13	12	11
A	Body Diameter	.037 .033	.043 .039	.049 .045	.056 .052	.065 .061	.074 .070	.082 .078	.094 .090	.107 .103	.122 .118
G	Head Diameter	.070	.083	.096	.108	.132	.144	.159	.188	.202	.228
H	Head Thickness	.035	.038	.040	.044	.047	.052	.059	.071	.075	.089

L LENGTH — SMOOTH — FORD PART NUMBERS

¼ ⅜ ½ ⅝	75325-S 75332-S 75341-S 75351-S	75326-S 75333-S 75342-S 75352-S	75327-S 75334-S 75343-S 75353-S	75328-S 75335-S 75344-S 75354-S	75329-S 75336-S 75345-S 75355-S	75330-S 75337-S 75346-S 75356-S	75331-S 75338-S 75347-S 75357-S	75339-S 75348-S 75358-S	75340-S 75349-S 75359-S	75350-S 75360-S
¾ ⅞ 1 1⅛	75361-S 75371-S	75362-S 75372-S 75381-S	75363-S 75373-S 75382-S 75390-S	75364-S 75374-S 75383-S 75391-S	75365-S 75375-S 75384-S 75392-S	75366-S 75376-S 75385-S 75393-S	75367-S 75377-S 75386-S 75394-S	75368-S 75378-S 75387-S 75395-S	75369-S 75379-S 75388-S 75396-S	75370-S 75380-S 75389-S 75397-S
1¼ 1½ 1¾ 2				75398-S	75399-S 75405-S	75400-S 75406-S 75411-S 75416-S	75401-S 75407-S 75412-S 75417-S	75402-S 75408-S 75413-S 75418-S	75403-S 75409-S 75414-S 75419-S	75404-S 75410-S 75415-S 75420-S

L LENGTH — BARBED — FORD PART NUMBERS

¼ ⅜ ½ ⅝	75425-S 75432-S 75441-S 75451-S	75426-S 75433-S 75442-S 75452-S	75427-S 75434-S 75443-S 75453-S	75428-S 75435-S 75444-S 75454-S	75429-S 75436-S 75445-S 75455-S	75430-S 75437-S 75446-S 75456-S	75431-S 75438-S 75447-S 75457-S	75439-S 75448-S 75458-S	75440-S 75449-S 75459-S	75450-S 75460-S
¾ ⅞ 1 1⅛	75461-S 75471-S	75462-S 75472-S 75481-S	75463-S 75473-S 75482-S 75490-S	75464-S 75474-S 75483-S 75491-S	75465-S 75475-S 75484-S 75492-S	75466-S 75476-S 75485-S 75493-S	75467-S 75477-S 75486-S 75494-S	75468-S 75478-S 75487-S 75495-S	75469-S 75479-S 75488-S 75496-S	75470-S 75480-S 75489-S 75497-S
1¼ 1½ 1¾ 2				75498-S	75499-S 75505-S	75500-S 75506-S 75511-S 75516-S	75501-S 75507-S 75512-S 75517-S	75502-S 75508-S 75513-S 75518-S	75503-S 75509-S 75514-S 75519-S	75504-S 75510-S 75515-S 75520-S

NOTES:

For Finishes See Addendum.
MATERIAL: Type "L.C.O.H." Steel.

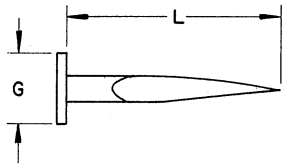

SWEDE UPHOLSTER TACKS

		#1	#1 1/2	#2	#2 1/2	#3	#4	#6	#8
G	Head Diameter	.109	.125	.141	.156	.156	.188	.188	.203
L	LENGTH	3/16	7/32	1/4	5/16	3/8	7/16	1/2	9/16
	Ford Part Numbers	75800-S	75801-S	75802-S	75803-S	75804-S	75805-S	75806-S	75807-S

		#10	#12	#14	#16	#18	#20	#22	#24
G	Head Diameter	.219	.219	.234	.250	.250	.234	.250	.250
L	LENGTH	5/8	11/16	3/4	13/16	7/8	15/16	1	1 1/8
	Ford Part Numbers	75808-S	75809-S	75810-S	75811-S	75812-S	75813-S	75814-S	75815-S

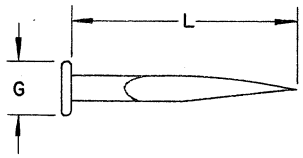

LACE TACKS

		#4	#6	#8	#10	#12	#14	#16	#18	#20
G	Head Diameter	.141	.141	.156	.156	.156	.172	.172	.188	.188
L	LENGTH	1/2	9/16	5/8	11/16	3/4	13/16	7/8	15/16	1
	Ford Part Numbers	75820-S	75821-S	75822-S	75823-S	75824-S	75825-S	75826-S	75827-S	75828-S

NOTES:

For Finishes See Addendum.
MATERIAL: Steel -- Steels for making tacks are fairly well standardized, but may vary slightly with maker so that requirements are omitted.

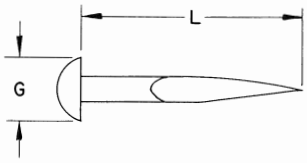

GIMP TACKS

		#1	#1 1/2	#2	#2 1/2	#3	#4	#6	#8	#10	#12
G	Head Diameter	.078	.094	.109	.109	.125	.125	.141	.141	.156	.156
L	LENGTH	7/32	1/4	5/16	3/8	7/16	1/2	9/16	5/8	11/16	3/4
	Ford Part Numbers	75835-S	75836-S	75837-S	75838-S	75839-S	75840-S	75841-S	75842-S	75843-S	75844-S

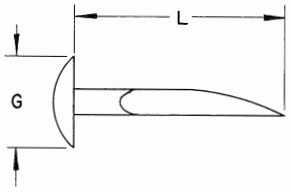

LINING TACKS

		#2	#2 1/2	#3	#4	#6	#8
G	Head Diameter	.188	.188	.203	.219	.219	.219
L	LENGTH	1/4	5/16	3/8	7/16	1/2	9/16
	Ford Part Numbers	75850-S	75851-S	75852-S	75853-S	75854-S	75855-S

		#10	#12	#14	#16	#18
G	Head Diameter	.250	.250	.250	.250	.250
L	LENGTH	5/8	11/16	3/4	13/16	7/8
	Ford Part Numbers	75856-S	75857-S	75858-S	75859-S	75860-S

NOTES:

For Finishes See Addendum.

MATERIAL: Steel -- Steels for making tacks are fairly well standardized, but may vary slightly with maker so that requirements are omitted.

FORD MOTOR COMPANY
STANDARD PARTS

SECTION J

PINS—PLUGS—KEYS

J
PINS
PLUGS-KEYS

STRAIGHT PINS

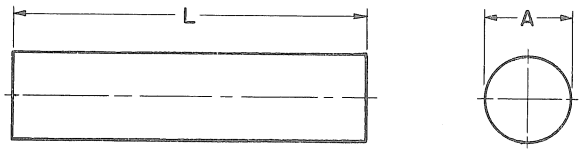

		1/16	3/32	1/8	5/32	3/16	7/32	1/4	9/32	5/16	3/8
A	Diameter	.0625 .0605	.0937 .0917	.1250 .1230	.1562 .1542	.1875 .1855	.2187 .2167	.2500 .2480	.2812 .2792	.3125 .3095	.3750 .3720

L LENGTH — FORD PART NUMBERS — MATERIAL: M-3422-A Steel

1/4 5/16 3/8	72350-S 72356-S 72363-S	72351-S 72357-S 72364-S	72352-S 72358-S 72365-S	72353-S 72359-S 72366-S	72354-S 72360-S 72367-S	72355-S 72361-S 72368-S	72362-S 72369-S	72370-S		
7/16 1/2 9/16 5/8	72371-S 72380-S 72390-S 72400-S	72372-S 72381-S 72391-S 72401-S	72373-S 72382-S 72392-S 72402-S	72374-S 72383-S 72393-S 72403-S	72375-S 72384-S 72394-S 72404-S	72376-S 72385-S 72395-S 72405-S	72377-S 72386-S 72396-S 72406-S	72378-S 72387-S 72397-S 72407-S	72379-S 72388-S 72398-S 72408-S	72389-S 72399-S 72409-S
11/16 3/4 13/16 7/8	72410-S 72420-S 72430-S 72440-S	72411-S 72421-S 72431-S 72441-S	72412-S 72422-S 72432-S 72442-S	72413-S 72423-S 72433-S 72443-S	72414-S 72424-S 72434-S 72444-S	72415-S 72425-S 72435-S 72445-S	72416-S 72426-S 72436-S 72446-S	72417-S 72427-S 72437-S 72447-S	72418-S 72428-S 72438-S 72448-S	72419-S 72429-S 72439-S 72449-S
15/16 1 1 1/8 1 1/4	72450-S 72460-S 72470-S 72480-S	72451-S 72461-S 72471-S 72481-S	72452-S 72462-S 72472-S 72482-S	72453-S 72463-S 72473-S 72483-S	72454-S 72464-S 72474-S 72484-S	72455-S 72465-S 72475-S 72485-S	72456-S 72466-S 72476-S 72486-S	72457-S 72467-S 72477-S 72487-S	72458-S 72468-S 72478-S 72488-S	72459-S 72469-S 72479-S 72489-S
1 3/8 1 1/2 1 5/8 1 3/4	72490-S	72491-S 72500-S 72509-S 72518-S	72492-S 72501-S 72510-S 72519-S	72493-S 72502-S 72511-S 72520-S	72494-S 72503-S 72512-S 72521-S	72495-S 72504-S 72513-S 72522-S	72496-S 72505-S 72514-S 72523-S	72497-S 72506-S 72515-S 72524-S	72498-S 72507-S 72516-S 72525-S	72499-S 72508-S 72517-S 72526-S
1 7/8 2 2 1/4 2 1/2		72527-S	72528-S	72529-S	72530-S	72531-S 72536-S 72541-S	72532-S 72537-S 72542-S 72546-S	72533-S 72538-S 72543-S 72547-S	72534-S 72539-S 72544-S 72548-S	72535-S 72540-S 72545-S 72549-S

L. LENGTH — FORD PART NUMBERS — MATERIAL: SAE-72-Brass

1/4 5/16 3/8	72575-S 72581-S 72588-S	72576-S 72582-S 72589-S	72577-S 72583-S 72590-S	72578-S 72584-S 72591-S	72579-S 72585-S 72592-S	72580-S 72586-S 72593-S	72587-S 72594-S	72595-S		
7/16 1/2 9/16 5/8	72596-S 72605-S 72615-S 72625-S	72597-S 72606-S 72616-S 72626-S	72598-S 72607-S 72617-S 72627-S	72599-S 72608-S 72618-S 72628-S	72600-S 72609-S 72619-S 72629-S	72601-S 72610-S 72620-S 72630-S	72602-S 72611-S 72621-S 72631-S	72603-S 72612-S 72622-S 72632-S	72604-S 72613-S 72623-S 72633-S	72614-S 72624-S 72634-S
11/16 3/4 13/16 7/8	72635-S 72645-S 72655-S 72665-S	72636-S 72646-S 72656-S 72666-S	72637-S 72647-S 72657-S 72667-S	72638-S 72648-S 72658-S 72668-S	72639-S 72649-S 72659-S 72669-S	72640-S 72650-S 72660-S 72670-S	72641-S 72651-S 72661-S 72671-S	72642-S 72652-S 72662-S 72672-S	72643-S 72653-S 72663-S 72673-S	72644-S 72654-S 72664-S 72674-S
15/16 1 1 1/8 1 1/4	72675-S 72685-S 72695-S 72705-S	72676-S 72686-S 72696-S 72706-S	72677-S 72687-S 72697-S 72707-S	72678-S 72688-S 72698-S 72708-S	72679-S 72689-S 72699-S 72709-S	72680-S 72690-S 72700-S 72710-S	72681-S 72691-S 72701-S 72711-S	72682-S 72692-S 72702-S 72712-S	72683-S 72693-S 72703-S 72713-S	72684-S 72694-S 72704-S 72714-S
1 3/8 1 1/2 1 5/8 1 3/4	72715-S	72716-S 72725-S 72734-S 72743-S	72717-S 72726-S 72735-S 72744-S	72718-S 72727-S 72736-S 72745-S	72719-S 72728-S 72737-S 72746-S	72720-S 72729-S 72738-S 72747-S	72721-S 72730-S 72739-S 72748-S	72722-S 72731-S 72740-S 72749-S	72723-S 72732-S 72741-S 72750-S	72724-S 72733-S 72742-S 72751-S
1 7/8 2 2 1/4 2 1/2		72752-S	72753-S	72754-S	72755-S	72756-S 72761-S 72766-S	72757-S 72762-S 72767-S 72771-S	72758-S 72763-S 72768-S 72772-S	72759-S 72764-S 72769-S 72773-S	72760-S 72765-S 72770-S 72774-S

NOTES: For Finishes See Addendum.
Straight Pins must be free from burrs and all other defects that might affect their serviceability.

STRAIGHT PINS

CHAMFERED ENDS

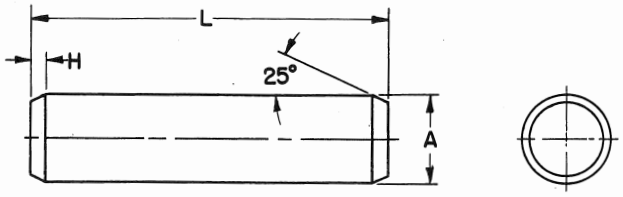

		1/16	3/32	1/8	5/32	3/16	7/32	1/4	9/32	5/16	3/8
A	Diameter	.0625 .0605	.0937 .0917	.1250 .1230	.1562 .1542	.1875 .1855	.2187 .2167	.2500 .2480	.2812 .2792	.3125 .3095	.3750 .3720
H	Chamfer	.010	.010	.010	.016	.016	.016	.016	.031	.031	.031

L LENGTH — FORD PART NUMBERS — MATERIAL: M-3422-A Steel

L	1/16	3/32	1/8	5/32	3/16	7/32	1/4	9/32	5/16	3/8
1/4 5/16 3/8	72775-S 72781-S 72788-S	72776-S 72782-S 72789-S	72777-S 72783-S 72790-S	72778-S 72784-S 72791-S	72779-S 72785-S 72792-S	72780-S 72786-S 72793-S	72787-S 72794-S	72795-S		
7/16 1/2 9/16 5/8	72796-S 72805-S 72815-S 72825-S	72797-S 72806-S 72816-S 72826-S	72798-S 72807-S 72817-S 72827-S	72799-S 72808-S 72818-S 72828-S	72800-S 72809-S 72819-S 72829-S	72801-S 72810-S 72820-S 72830-S	72802-S 72811-S 72821-S 72831-S	72803-S 72812-S 72822-S 72832-S	72804-S 72813-S 72823-S 72833-S	72814-S 72824-S 72834-S
11/16 3/4 13/16 7/8	72835-S 72845-S 72855-S 72865-S	72836-S 72846-S 72856-S 72866-S	72837-S 72847-S 72857-S 72867-S	72838-S 72848-S 72858-S 72868-S	72839-S 72849-S 72859-S 72869-S	72840-S 72850-S 72860-S 72870-S	72841-S 72851-S 72861-S 72871-S	72842-S 72852-S 72862-S 72872-S	72843-S 72853-S 72863-S 72873-S	72844-S 72854-S 72864-S 72874-S
15/16 1 1 1/8 1 1/4	72875-S 72885-S 72895-S 72905-S	72876-S 72886-S 72896-S 72906-S	72877-S 72887-S 72897-S 72907-S	72878-S 72888-S 72898-S 72908-S	72879-S 72889-S 72899-S 72909-S	72880-S 72890-S 72900-S 72910-S	72881-S 72891-S 72901-S 72911-S	72882-S 72892-S 72902-S 72912-S	72883-S 72893-S 72903-S 72913-S	72884-S 72894-S 72904-S 72914-S
1 3/8 1 1/2 1 5/8 1 3/4	72915-S	72916-S 72925-S 72934-S 72943-S	72917-S 72926-S 72935-S 72944-S	72918-S 72927-S 72936-S 72945-S	72919-S 72928-S 72937-S 72946-S	72920-S 72929-S 72938-S 72947-S	72921-S 72930-S 72939-S 72948-S	72922-S 72931-S 72940-S 72949-S	72923-S 72932-S 72941-S 72950-S	72924-S 72933-S 72942-S 72951-S
1 7/8 2 2 1/4 2 1/2		72952-S	72953-S	72954-S	72955-S	72956-S 72961-S 72966-S	72957-S 72962-S 72967-S 72971-S	72958-S 72963-S 72968-S 72972-S	72959-S 72964-S 72969-S 72973-S	72960-S 72965-S 72970-S 72974-S

L LENGTH — FORD PART NUMBERS — MATERIAL: SAE-72-Brass

L	1/16	3/32	1/8	5/32	3/16	7/32	1/4	9/32	5/16	3/8
1/4 5/16 3/8	73000-S 73006-S 73013-S	73001-S 73007-S 73014-S	73002-S 73008-S 73015-S	73003-S 73009-S 73016-S	73004-S 73010-S 73017-S	73005-S 73011-S 73018-S	73012-S 73019-S	73020-S		
7/16 1/2 9/16 5/8	73021-S 73030-S 73040-S 73050-S	73022-S 73031-S 73041-S 73051-S	73023-S 73032-S 73042-S 73052-S	73024-S 73033-S 73043-S 73053-S	73025-S 73034-S 73044-S 73054-S	73026-S 73035-S 73045-S 73055-S	73027-S 73036-S 73046-S 73056-S	73028-S 73037-S 73047-S 73057-S	73029-S 73038-S 73048-S 73058-S	73039-S 73049-S 73059-S
11/16 3/4 13/16 7/8	73060-S 73070-S 73080-S 73090-S	73061-S 73071-S 73081-S 73091-S	73062-S 73072-S 73082-S 73092-S	73063-S 73073-S 73083-S 73093-S	73064-S 73074-S 73084-S 73094-S	73065-S 73075-S 73085-S 73095-S	73066-S 73076-S 73086-S 73096-S	73067-S 73077-S 73087-S 73097-S	73068-S 73078-S 73088-S 73098-S	73069-S 73079-S 73089-S 73099-S
15/16 1 1 1/8 1 1/4	73100-S 73110-S 73120-S 73130-S	73101-S 73111-S 73121-S 73131-S	73102-S 73112-S 73122-S 73132-S	73103-S 73113-S 73123-S 73133-S	73104-S 73114-S 73124-S 73134-S	73105-S 73115-S 73125-S 73135-S	73106-S 73116-S 73126-S 73136-S	73107-S 73117-S 73127-S 73137-S	73108-S 73118-S 73128-S 73138-S	73109-S 73119-S 73129-S 73139-S
1 3/8 1 1/2 1 5/8 1 3/4	73140-S	73141-S 73150-S 73159-S 73168-S	73142-S 73151-S 73160-S 73169-S	73143-S 73152-S 73161-S 73170-S	73144-S 73153-S 73162-S 73171-S	73145-S 73154-S 73163-S 73172-S	73146-S 73155-S 73164-S 73173-S	73147-S 73156-S 73165-S 73174-S	73148-S 73157-S 73166-S 73175-S	73149-S 73158-S 73167-S 73176-S
1 7/8 2 2 1/4 2 1/2		73177-S	73178-S	73179-S	73180-S	73181-S 73186-S 73191-S	73182-S 73187-S 73192-S 73196-S	73183-S 73188-S 73193-S 73197-S	73184-S 73189-S 73194-S 73198-S	73185-S 73190-S 73195-S 73199-S

NOTES: For Finishes See Addendum.
Straight Pins must be free from burrs, and all other defects that might affect their serviceability.

DOWEL PINS

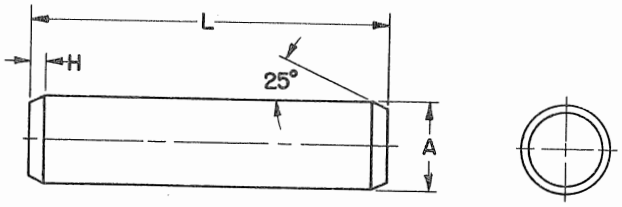

		1/16	3/32	1/8	5/32	3/16	7/32	1/4	9/32	5/16	3/8
A	Diameter	.0600 .0595	.0912 .0907	.1223 .1218	.1535 .1530	.1847 .1842	.2159 .2154	.2470 .2465	.2782 .2777	.3094 .3089	.3717 .3712
H	Chamfer	.010	.010	.010	.016	.016	.016	.016	.031	.031	.031

L LENGTH — FORD PART NUMBERS — MATERIAL: M-3422-A Steel

1/4 5/16 3/8	73200-S 73206-S 73213-S	73201-S 73207-S 73214-S	73202-S 73208-S 73215-S	73203-S 73209-S 73216-S	73204-S 73210-S 73217-S	73205-S 73211-S 73218-S	73212-S 73219-S	73220-S		
7/16 1/2 9/16 5/8	73221-S 73230-S 73240-S 73250-S	73222-S 73231-S 73241-S 73251-S	73223-S 73232-S 73242-S 73252-S	73224-S 73233-S 73243-S 73253-S	73225-S 73234-S 73244-S 73254-S	73226-S 73235-S 73245-S 73255-S	73227-S 73236-S 73246-S 73256-S	73228-S 73237-S 73247-S 73257-S	73229-S 73238-S 73248-S 73258-S	73239-S 73249-S 73259-S
11/16 3/4 13/16 7/8	73260-S 73270-S 73280-S 73290-S	73261-S 73271-S 73281-S 73291-S	73262-S 73272-S 73282-S 73292-S	73263-S 73273-S 73283-S 73293-S	73264-S 73274-S 73284-S 73294-S	73265-S 73275-S 73285-S 73295-S	73266-S 73276-S 73286-S 73296-S	73267-S 73277-S 73287-S 73297-S	73268-S 73278-S 73288-S 73298-S	73269-S 73279-S 73289-S 73299-S
15/16 1 1 1/8 1 1/4	73300-S 73310-S 73320-S 73330-S	73301-S 73311-S 73321-S 73331-S	73302-S 73312-S 73322-S 73332-S	73303-S 73313-S 73323-S 73333-S	73304-S 73314-S 73324-S 73334-S	73305-S 73315-S 73325-S 73335-S	73306-S 73316-S 73326-S 73336-S	73307-S 73317-S 73327-S 73337-S	73308-S 73318-S 73328-S 73338-S	73309-S 73319-S 73329-S 73339-S
1 3/8 1 1/2 1 5/8 1 3/4	73340-S	73341-S 73350-S 73359-S 73368-S	73342-S 73351-S 73360-S 73369-S	73343-S 73352-S 73361-S 73370-S	73344-S 73353-S 73362-S 73371-S	73345-S 73354-S 73363-S 73372-S	73346-S 73355-S 73364-S 73373-S	73347-S 73356-S 73365-S 73374-S	73348-S 73357-S 73366-S 73375-S	73349-S 73358-S 73367-S 73376-S
1 7/8 2 2 1/4 2 1/2		73377-S	73378-S	73379-S	73380-S	73381-S 73386-S 73391-S	73382-S 73387-S 73392-S 73396-S	73383-S 73388-S 73393-S 73397-S	73384-S 73389-S 73394-S 73398-S	73385-S 73390-S 73395-S 73399-S

L LENGTH — FORD PART NUMBERS — MATERIAL: SAE-72 Brass

1/4 5/16 3/8 7/16	73425-S 73431-S 73438-S 73446-S	73426-S 73432-S 73439-S 73447-S	73427-S 73433-S 73440-S 73448-S	73428-S 73434-S 73441-S 73449-S	73429-S 73435-S 73442-S 73450-S	73430-S 73436-S 73443-S 73451-S	73437-S 73444-S 73452-S	73445-S 73453-S	73454-S	
1/2 9/16 5/8 11/16	73455-S 73465-S 73475-S 73485-S	73456-S 73466-S 73476-S 73486-S	73457-S 73467-S 73477-S 73487-S	73458-S 73468-S 73478-S 73488-S	73459-S 73469-S 73479-S 73489-S	73460-S 73470-S 73480-S 73490-S	73461-S 73471-S 73481-S 73491-S	73462-S 73472-S 73482-S 73492-S	73463-S 73473-S 73483-S 73493-S	73464-S 73474-S 73484-S 73494-S
3/4 13/16 7/8 15/16	73495-S 73505-S 73515-S 73525-S	73496-S 73506-S 73516-S 73526-S	73497-S 73507-S 73517-S 73527-S	73498-S 73508-S 73518-S 73528-S	73499-S 73509-S 73519-S 73529-S	73500-S 73510-S 73520-S 72530-S	73501-S 73511-S 73521-S 73531-S	73502-S 73512-S 73522-S 73532-S	73503-S 73513-S 73523-S 73533-S	73504-S 73514-S 73524-S 73534-S
1 1 1/8 1 1/4 1 3/8	73535-S 73545-S 73555-S 73565-S	73536-S 73546-S 73556-S 73566-S	73537-S 73547-S 73557-S 73567-S	73538-S 73548-S 73558-S 73568-S	73539-S 73549-S 73559-S 73569-S	73540-S 73550-S 73560-S 73570-S	73541-S 73551-S 73561-S 73571-S	73542-S 73552-S 73562-S 73572-S	73543-S 73553-S 73563-S 73573-S	73544-S 73554-S 73564-S 73574-S

RECOMMENDED REAMED HOLE SIZES FOR DOWEL PINS

Press Fit	.0595 .0580	.0907 .0892	.1217 .1202	.1528 .1513	.1840 .1825	.2151 .2136	.2462 .2447	.2773 .2758	.3085 .3070	.3708 .3693

NOTES: For Finishes See Addendum.
Dowel Pins must be free from burrs, and all other defects that might affect their serviceability.

TAPER PINS

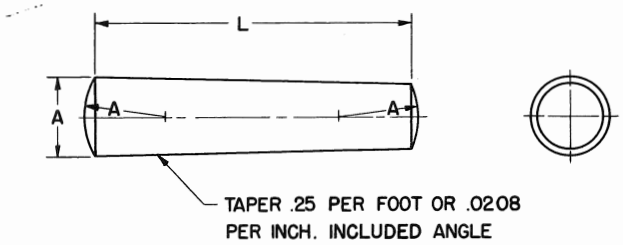

	Number of Pin	00000	0000	000	00	0	1	2	3	4	5	6	7	8
A	Diameter - Large End	.0953 .0933	.1103 .1083	.1263 .1243	.1423 .1403	.1573 .1553	.1733 .1713	.1943 .1923	.2203 .2183	.2513 .2493	.2903 .2883	.3423 .3403	.4103 .4083	.4933 .4913

L LENGTH — FORD PART NUMBERS

3/8 7/16 1/2	73625-S 73630-S 73637-S	73626-S 73631-S 73638-S	73627-S 73632-S 73639-S	73628-S 73633-S 73640-S	73629-S 73634-S 73641-S	73635-S 73642-S	73636-S 73643-S	73644-S	73645-S					
9/16 5/8 11/16 3/4	73646-S 73657-S 73670-S 73683-S	73647-S 73658-S 73671-S 73684-S	73648-S 73659-S 73672-S 73685-S	73649-S 73660-S 73673-S 73686-S	73650-S 73661-S 73674-S 73687-S	73651-S 73662-S 73675-S 73688-S	73652-S 73663-S 73676-S 73689-S	73653-S 73664-S 73677-S 73690-S	73654-S 73665-S 73678-S 73691-S	73655-S 73666-S 73679-S 73692-S	73656-S 73667-S 73680-S 73693-S	73668-S 73681-S 73694-S	73669-S 73682-S 73695-S
13/16 7/8 15/16 1	73696-S 73709-S	73697-S 73710-S	73698-S 73711-S 73722-S 73733-S	73699-S 73712-S 73723-S 73734-S	73700-S 73713-S 73724-S 73735-S	73701-S 73714-S 73725-S 73736-S	73702-S 73715-S 73726-S 73737-S	73703-S 73716-S 73727-S 73738-S	73704-S 73717-S 73728-S 73739-S	73705-S 73718-S 73729-S 73740-S	73706-S 73719-S 73730-S 73741-S	73707-S 73720-S 73731-S 73742-S	73708-S 73721-S 73732-S 73743-S
1 1/8 1 1/4 1 3/8 1 1/2			73744-S 73755-S	73745-S 73756-S	73746-S 73757-S 73766-S 73775-S	73747-S 73758-S 73767-S 73776-S	73748-S 73759-S 73768-S 73777-S	73749-S 73760-S 73769-S 73778-S	73750-S 73761-S 73770-S 73779-S	73751-S 73762-S 73771-S 73780-S	73752-S 73763-S 73772-S 73781-S	73753-S 73764-S 73773-S 73782-S	73754-S 73765-S 73774-S 73783-S
1 5/8 1 3/4 1 7/8 2					73784-S 73793-S	73785-S 73794-S	73786-S 73795-S 73802-S 73809-S	73787-S 73796-S 73803-S 73810-S	73788-S 73797-S 73804-S 73811-S	73789-S 73798-S 73805-S 73812-S	73790-S 73799-S 73806-S 73813-S	73791-S 73800-S 73807-S 73814-S	73792-S 73801-S 73808-S 73815-S
2 1/4 2 1/2 2 3/4 3							73816-S 73823-S	73817-S 73824-S 73830-S 73836-S	73818-S 73825-S 73831-S 73837-S	73819-S 73826-S 73832-S 73838-S	73820-S 73827-S 73833-S 73839-S	73821-S 73828-S 73834-S 73840-S	73822-S 73829-S 73835-S 73841-S

NOTES: For Finishes See Addendum.
MATERIAL: M-3422-A Steel.
Taper Pins must be free from burrs, and all other defects that might affect their serviceability.

CLEVIS PINS

FORD MOTOR COMPANY

STANDARD PARTS

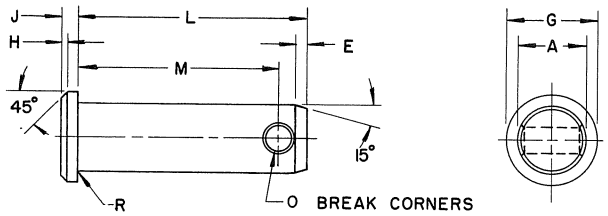

			3/16	1/4	5/16	5/16	3/8	3/8	7/16	7/16	1/2	9/16	5/8
	A	Body Diameter	.186 .181	.248 .243	.311 .306	.311 .306	.373 .368	.373 .368	.436 .431	.436 .431	.496 .491	.559 .555	.621 .616
	G	Head Diameter	.312	.375	.438	.438	.500	.500	.562	.562	.625	.688	.812
	J	Head Thickness	.062	.094	.094	.094	.125	.125	.156	.156	.156	.156	.203
	H	Head Chamfer	.016	.031	.031	.031	.031	.031	.047	.047	.047	.047	.062
	O	Drill Size	5/64	5/64	9/64	7/64	9/64	7/64	9/64	7/64	9/64	9/64	9/64
	E	Chamfer	.047	.063	.078	.078	.078	.078	.094	.094	.109	.125	.141
1/2	M	Distance to Hole Ford Part Numbers	.406 73850-S	.406 73851-S	.375 73852-S	.375 76000-S	.375 73853-S	.375 76018-S					
9/16	M	Distance to Hole Ford Part Numbers	.469 73854-S	.469 73855-S	.438 73856-S	.438 76001-S	.438 73857-S	.438 76019-S					
19/32	M	Distance to Hole Ford Part Numbers	.484 *73858-S										
5/8	M	Distance to Hole Ford Part Numbers	.531 73859-S	.531 73860-S	.500 73861-S	.500 76002-S	.500 73862-S	.500 76020-S	.469 73863-S	.469 76035-S			
11/16	M	Distance to Hole Ford Part Numbers	.594 73864-S	.594 73865-S	.563 73866-S	.563 76003-S	.563 73867-S	.563 76021-S	.531 73868-S	.531 76036-S			
3/4	M	Distance to Hole Ford Part Numbers	.656 73869-S	.656 73870-S	.625 73871-S	.625 76004-S	.625 73872-S	.625 76022-S	.594 73873-S	.594 76037-S	.594 73874-S	.594 73875-S	.563 73876-S
51/64	M	Distance to Hole Ford Part Numbers		.672 *73877-S									
13/16	M	Distance to Hole Ford Part Numbers	.719 73878-S	.719 73879-S	.688 73880-S	.688 76005-S	.688 73881-S	.688 76023-S	.656 73882-S	.656 76038-S	.656 73883-S	.656 73884-S	.625 73885-S
7/8	M	Distance to Hole Ford Part Numbers	.781 73886-S	.781 73887-S	.750 73888-S	.750 76006-S	.750 73889-S	.750 76024-S	.719 73890-S	.719 76039-S	.719 73891-S	.719 73892-S	.688 73893-S
15/16	M	Distance to Hole Ford Part Numbers	.844 73894-S	.844 73895-S	.813 73896-S	.813 76007-S	.813 73897-S	.813 76025-S	.781 73898-S	.781 76040-S	.781 73899-S	.781 73900-S	.750 73901-S
31/32	M	Distance to Hole Ford Part Numbers			.836 73931-S	.812 *76008-S							
1	M	Distance to Hole Ford Part Numbers	.906 73902-S	.906 73903-S	.875 73904-S	.875 76009-S	.875 73905-S	.875 76026-S	.844 73906-S	.844 76041-S	.844 73907-S	.844 73908-S	.813 73909-S
1 1/16	M	Distance to Hole Ford Part Numbers		.969 73910-S	.938 73911-S	.938 76010-S	.938 73912-S	.938 76027-S	.906 73913-S	.906 76042-S	.906 73914-S	.906 73915-S	.875 73916-S
1 3/32	M	Distance to Hole Ford Part Numbers		1.031 73917-S	1.000 73918-S	1.000 76011-S	1.000 73919-S	.938 *76028-S	.969 73920-S	.969 76043-S	.969 73921-S	.969 73922-S	.938 73923-S
1 3/16	M	Distance to Hole Ford Part Numbers		1.094 73924-S	1.063 73925-S	1.063 76012-S	1.063 73926-S	1.063 76029-S	1.031 73927-S	1.031 76044-S	1.031 73928-S	1.031 73929-S	1.000 73930-S
1 15/64	M	Distance to Hole Ford Part Numbers		1.156 73932-S	1.125 73933-S	1.125 76013-S	1.125 73934-S	1.125 76030-S	1.094 73935-S	1.062 *76045-S	1.094 73936-S	1.094 73937-S	1.063 73938-S
1 5/16	M	Distance to Hole Ford Part Numbers		1.219 73939-S	1.188 73940-S	1.188 76014-S	1.188 73941-S	1.188 76031-S	1.156 73942-S	1.156 76046-S	1.156 73943-S	1.156 73944-S	1.125 73945-S
1 3/8	M	Distance to Hole Ford Part Numbers		1.281 73947-S	1.250 73948-S	1.250 76015-S	1.250 73949-S	1.250 76032-S	1.219 73950-S	1.219 76047-S	1.219 73951-S	1.219 73952-S	1.189 73953-S
1 27/64	M	Distance to Hole Ford Part Numbers		1.344 73954-S	1.313 73955-S	1.313 76016-S	1.313 73956-S	1.313 76033-S	1.281 73957-S	1.281 76048-S	1.203 *73958-S	1.281 73959-S	1.250 73960-S
1 1/2	M	Distance to Hole Ford Part Numbers		1.406 73962-S	1.375 73963-S	1.375 76017-S	1.375 73964-S	1.375 76034-S	1.344 73965-S	1.344 76049-S	1.344 73966-S	1.344 73967-S	1.313 73968-S
		Recommended Cotter Pin	72000-S	72003-S	72005-S	72004-S	72010-S	72009-S	72017-S	72016-S	72026-S	72026-S	72035-S

NOTES: For Finishes See Addendum.
MATERIAL: AISI-C-1013 Steel or Equivalent.
*ASA Clevises
HEAT TREATMENT - Heat to 1560°F in light case furnace or liquid salt bath to a case depth of .005" to .010". Quench in water. Must be file hard.
Clevis Pins must be free from burrs, loose scale, sharp edges and all other defects that might affect their serviceability.

CLEVIS PINS

STANDARD PARTS

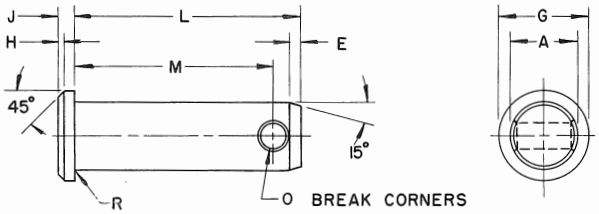

			3/16	1/4	5/16	5/16	3/8	3/8	7/16	7/16	1/2	9/16	5/8
	A	Body Diameter	.186 .181	.248 .243	.311 .306	.311 .306	.373 .368	.373 .368	.436 .431	.436 .431	.496 .491	.559 .555	.621 .616
	G	Head Diameter	.312	.375	.438	.438	.500	.500	.562	.562	.625	.688	.812
	J	Head Thickness	.062	.094	.094	.094	.125	.125	.156	.156	.156	.156	.203
	H	Head Chamfer	.016	.031	.031	.031	.031	.031	.047	.047	.047	.047	.062
	O	Drill Size	5/64	5/64	9/64	7/64	9/64	7/64	9/64	7/64	9/64	9/64	9/64
	E	Chamfer	.047	063	.078	.078	.078	.078	.094	.094	.109	.125	.141
1 9/16	M	Distance to Hole Ford Part Numbers		1.469 73969-S	1.438 73970-S	1.438 76051-S	1.438 73971-S	1.438 76069-S	1.406 73972-S	1.406 76088-S	1.406 73973-S	1.406 73974-S	1.375 73975-S
1 5/8	M	Distance to Hole Ford Part Numbers		1.531 73976-S	1.500 73977-S	1.500 76052-S	1.500 73978-S	1.500 76070-S	1.469 73979-S	1.469 76089-S	1.469 73980-S	1.469 73981-S	1.438 73982-S
1 23/32	M	Distance to Hole Ford Part Numbers		1.594 73984-S	1.563 73985-S	1.563 76053-S	1.563 73986-S	1.563 76071-S	1.531 73987-S	1.531 76090-S	1.531 73988-S	1.531 73989-S	1.469 *73990-S
1 3/4	M	Distance to Hole Ford Part Numbers		1.656 73991-S	1.625 73992-S	1.625 76054-S	1.625 73993-S	1.625 76072-S	1.594 73994-S	1.594 76091-S	1.594 73995-S	1.594 73996-S	1.563 73997-S
1 13/16	M	Distance to Hole Ford Part Numbers		1.719 73998-S	1.688 73999-S	1.688 76055-S	1.688 74000-S	1.688 76073-S	1.656 74001-S	1.656 76092-S	1.656 74002-S	1.656 74003-S	1.625 74004-S
1 7/8	M	Distance to Hole Ford Part Numbers		1.781 74005-S	1.750 74006-S	1.750 76056-S	1.750 74007-S	1.750 76074-S	1.719 74008-S	1.719 76093-S	1.719 74009-S	1.719 74010-S	1.688 74011-S
1 15/16	M	Distance to Hole Ford Part Numbers		1.844 74012-S	1.813 74013-S	1.813 76057-S	1.813 74014-S	1.813 76075-S	1.781 74015-S	1.781 76094-S	1.781 74016-S	1.781 74017-S	1.750 74018-S
2	M	Distance to Hole Ford Part Numbers		1.906 74019-S	1.875 74020-S	1.875 76058-S	1.875 74021-S	1.875 76076-S	1.844 74022-S	1.844 76095-S	1.844 74023-S	1.844 74024-S	1.813 74025-S
2 1/16	M	Distance to Hole Ford Part Numbers		1.969 74026-S	1.938 74027-S	1.938 76059-S	1.938 74028-S	1.938 76077-S	1.906 74029-S	1.906 76096-S	1.906 74030-S	1.906 74031-S	1.875 74032-S
2 1/8	M	Distance to Hole Ford Part Numbers		2.031 74033-S	2.000 74034-S	2.000 76060-S	2.000 74035-S	2.000 76078-S	1.969 74036-S	1.969 76097-S	1.969 74037-S	1.969 74038-S	1.938 74039-S
2 3/16	M	Distance to Hole Ford Part Numbers		2.094 74040-S	2.063 74041-S	2.063 76061-S	2.063 74042-S	2.063 76079-S	2.031 74043-S	2.031 76098-S	2.031 74044-S	2.031 74045-S	2.000 74046-S
2 1/4	M	Distance to Hole Ford Part Numbers		2.156 74047-S	2.125 74048-S	2.125 76062-S	2.125 74049-S	2.125 76080-S	2.094 74050-S	2.094 76099-S	2.094 74051-S	2.094 74052-S	2.063 74053-S
2 5/16	M	Distance to Hole Ford Part Numbers		2.219 74054-S	2.188 74055-S	2.188 76063-S	2.188 74056-S	2.188 76081-S	2.156 74057-S	2.156 76100-S	2.156 74058-S	2.156 74059-S	2.125 74060-S
2 3/8	M	Distance to Hole Ford Part Numbers		2.281 74061-S	2.250 74062-S	2.250 76064-S	2.250 74063-S	2.250 76082-S	2.219 74064-S	2.219 76101-S	2.219 74065-S	2.219 74066-S	2.188 74067-S
2 1/2	M	Distance to Hole Ford Part Numbers		2.406 74068-S	2.375 74069-S	2.375 76065-S	2.375 74070-S	2.375 76083-S	2.344 74071-S	2.344 76102-S	2.344 74072-S	2.344 74073-S	2.313 74074-S
2 5/8	M	Distance to Hole Ford Part Numbers		2.531 74075-S	2.500 74076-S	2.500 76066-S	2.500 74077-S	2.500 76084-S	2.469 74078-S	2.469 76103-S	2.469 74079-S	2.469 74080-S	2.438 74081-S
2 3/4	M	Distance to Hole Ford Part Numbers		2.656 74082-S	2.625 74083-S	2.625 76067-S	2.625 74084-S	2.625 76085-S	2.594 74085-S	2.594 76104-S	2.594 74086-S	2.594 74087-S	2.563 74088-S
2 7/8	M	Distance to Hole Ford Part Numbers			2.750 74089-S	2.750 76068-S	2.750 74090-S	2.750 76086-S	2.719 74091-S	2.719 76105-S	2.719 74092-S	2.719 74093-S	2.688 74094-S
3	M	Distance to Hole Ford Part Numbers					2.875 74095-S	2.875 76087-S	2.844 74096-S	2.844 76106-S	2.844 74097-S	2.844 74098-S	2.813 74099-S
		Recommended Cotter Pin	72000-S	72003-S	72005-S	72004-S	72010-S	72009-S	72017-S	72016-S	72026-S	72026-S	72035-S

NOTES: For Finishes See Addendum.
MATERIAL: AISI-C-1013 Steel or Equivalent.
*ASA Clevises
HEAT TREATMENT - Heat to 1560°F. in light case furnace or liquid salt bath to a case depth of .005" to .010". Quench in water. Must be file hard.
Clevis Pins must be free from burrs, loose scale, sharp edges and all other defects that might affect their serviceability.

GROOVE PINS

FORD MOTOR COMPANY

STANDARD PARTS

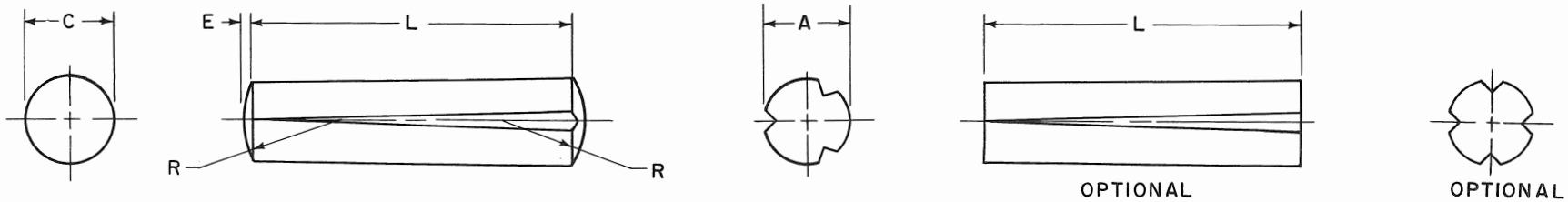

		1/16	5/64	3/32	7/64	1/8	5/32	3/16	7/32	1/4	5/16	3/8	1/2
A	Diameter	.069 .065	.086 .082	.103 .099	.119 .115	.136 .132	.167 .163	.200 .196	.232 .228	.264 .260	.330 .326	.394 .390	.527 .521
C	Diameter	.0625 .0615	.0781 .0771	.0938 .0928	.1094 .1084	.1250 .1230	.1563 .1543	.1875 .1855	.2188 .2168	.2500 .2480	.3125 .3105	.3750 .3730	.5000 .4980
E	Crown Height	.0065	.0087	.0091	.0110	.0130	.0170	.0180	.0220	.0260	.0340	.0390	.0520
R	Radius	.078	.094	.125	.141	.156	.188	.250	.281	.313	.375	.469	.625
	Recommended Hole Size	.0640 .0625	.0798 .0781	.0956 .0938	.1113 .1094	.1271 .1250	.1587 .1563	.1903 .1875	.2219 .2188	.2534 .2500	.3166 .3125	.3797 .3750	.5060 .5000

L LENGTH — FORD PART NUMBERS

	1/16	5/64	3/32	7/64	1/8	5/32	3/16	7/32	1/4	5/16	3/8	1/2
1/4 5/16 3/8 7/16	72175-S 72177-S 72179-S 72183-S	72176-S 72178-S 72180-S 72184-S	72181-S 72185-S	72182-S 72186-S								
1/2 9/16 5/8 11/16	72187-S 72193-S 72199-S 72207-S	72188-S 72194-S 72200-S 72208-S	72189-S 72195-S 72201-S 72209-S	72190-S 72196-S 72202-S 72210-S	72191-S 72197-S 72203-S 72211-S	72192-S 72198-S 72204-S 72212-S	72205-S 72213-S	72206-S 72214-S	72215-S	72216-S		
3/4 13/16 7/8 1	72217-S 72227-S	72218-S 72228-S 72239-S 72250-S	72219-S 72229-S 72240-S 72251-S	72220-S 72230-S 72241-S 72252-S	72221-S 72231-S 72242-S 72253-S	72222-S 72232-S 72243-S 72254-S	72223-S 72233-S 72244-S 72255-S	72224-S 72234-S 72245-S 72256-S	72225-S 72235-S 72246-S 72257-S	72226-S 72236-S 72247-S 72258-S	72237-S 72248-S 72259-S	72238-S 72249-S 72260-S
1 1/8 1 1/4 1 3/8 1 1/2				72261-S 72270-S	72262-S 72271-S 72279-S 72287-S	72263-S 72272-S 72280-S 72288-S	72264-S 72273-S 72281-S 72289-S	72265-S 72274-S 72282-S 72290-S	72266-S 72275-S 72283-S 72291-S	72267-S 72276-S 72284-S 72292-S	72268-S 72277-S 72285-S 72293-S	72269-S 72278-S 72286-S 72294-S
1 5/8 1 3/4 1 7/8 2						72295-S 72302-S	72296-S 72303-S 72309-S 72315-S	72297-S 72304-S 72310-S 72316-S	72298-S 72305-S 72311-S 72317-S	72299-S 72306-S 72312-S 72318-S	72300-S 72307-S 72313-S 72319-S	72301-S 72308-S 72314-S 72320-S
2 1/4 2 1/2 2 3/4 3							72321-S 72327-S 72333-S 72339-S	72322-S 72328-S 72334-S 72340-S	72323-S 72329-S 72335-S 72341-S	72324-S 72330-S 72336-S 72342-S	72325-S 72331-S 72337-S 72343-S	72326-S 72332-S 72338-S 72344-S

NOTES: Finishes See Addendum.
MATERIAL: M-3422-A Steel.
Groove Pins must be free from burrs and all other defects that might affect their serviceability.

PRINTED IN U.S.A.

EXPANSION PLUGS

STANDARD PARTS

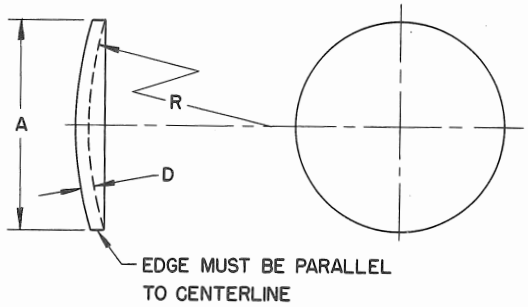

		1/4	5/16	3/8	7/16	1/2	9/16	5/8	11/16	3/4	13/16
A	Diameter	.252 .248	.315 .310	.377 .372	.440 .435	.502 .498	.565 .560	.628 .622	.690 .684	.753 .747	.815 .809
D	Thickness	.037 .029	.074 .060	.074 .060	.074 .060	.074 .060	.074 .060	.074 .060	.074 .060	.074 .060	.074 .060
R	Radius	.219	.266	.406	.469	.531	.625	.750	.875	.938	1.031
	Ford Part Numbers	74105-S	74106-S	74107-S	74108-S	74109-S	74110-S	74111-S	74112-S	74113-S	74114-S

		7/8	15/16	1	1 1/16	1 1/8	1 3/16	1 1/4	1 5/16	1 3/8	1 7/16
A	Diameter	.878 .872	.940 .934	1.003 .997	1.065 1.059	1.128 1.122	1.190 1.184	1.253 1.247	1.317 1.307	1.380 1.370	1.442 1.432
D	Thickness	.074 .060	.082 .068	.082 .068	.082 .068	.082 .068	.082 .068	.082 .068	.082 .068	.082 .068	.082 .068
R	Radius	1.094	1.156	1.125	1.250	1.375	1.500	1.625	1.750	1.812	2.000
	Ford Part Numbers	74115-S	74116-S	74117-S	74118-S	74119-S	74120-S	74121-S	74122-S	74123-S	74124-S

		1 1/2	1 5/8	1 3/4	1 7/8	2	2 1/8	2 1/4	2 3/8	2 1/2	2 3/4
A	Diameter	1.505 1.495	1.630 1.620	1.755 1.745	1.880 1.870	2.005 1.995	2.130 2.120	2.255 2.245	2.380 2.370	2.505 2.495	2.755 2.745
D	Thickness	.082 .068	.082 .068	.082 .068	.082 .068	.082 .068	.082 .068	.082 .068	.082 .068	.082 .068	.082 .068
R	Radius	2.125	2.375	2.688	2.875	3.188	3.250	3.562	3.875	4.156	4.500
	Ford Part Numbers	74125-S	74126-S	74127-S	74128-S	74129-S	74130-S	74131-S	74132-S	74133-S	74134-S

NOTES: For Finishes See Addendum.
MATERIAL: Type L.C.O.H. Steel.
Thickness Tolerance Based on A.I.S.I. Steel Products Manual.
Expansion Plugs must be free from burrs, loose scale, sharp edges and all other defects that might affect their serviceability.

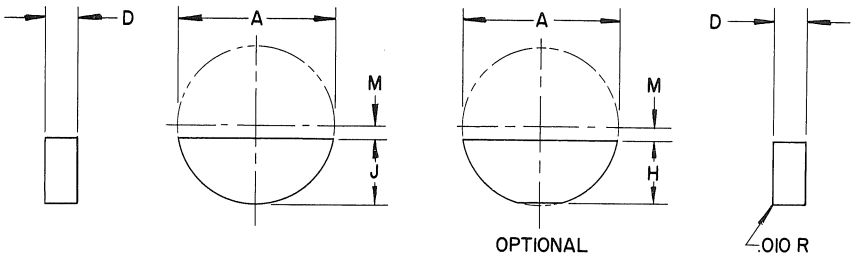

Thickness	Dia.	Key No.	Ford Nos. When Made From "C" Key Steel SOFT Rockwell C-10 Min.	Ford Nos. When Made From "C" Key Steel Hardened Rockwell C-40 to C-50	D Thickness	A Diameter	J Height	H Height (Optional)	M Dist. to Center	Weight lbs. per 1000
1/16 3/32 1/8	1/2	1 2 3	74140-S 74141-S 74142-S	74170-S 74171-S 74172-S	.0635-.0625 .0948-.0938 .1260-.1250	.500- .490 .500- .490 .500- .490	.203-.198 .203-.198 .203-.198	.194-.188 .194-.188 .194-.188	.047 .047 .047	1.3 1.9 2.5
3/32 1/8 5/32	5/8	4 5 6	74143-S 74144-S 74145-S	74173-S 74174-S 74175-S	.0948-.0938 .1260-.1250 .1573-.1563	.625- .615 .625- .615 .625- .615	.250-.245 .250-.245 .250-.245	.240-.234 .240-.234 .240-.234	.062 .062 .062	3.0 3.9 4.9
1/8 5/32 3/16	3/4	7 8 9	74146-S 74147-S 74148-S	74176-S 74177-S 74178-S	.1260-.1250 .1573-.1563 .1885-.1875	.750- .740 .750- .740 .750- .740	.313-.308 .313-.308 .313-.308	.303-.297 .303-.297 .303-.297	.062 .062 .062	6.1 7.5 9.0
5/32 3/16 1/4	7/8	10 11 A	74149-S 74150-S 74151-S	74179-S 74180-S 74181-S	.1573-.1563 .1885-.1875 .2510-.2500	.875- .865 .875- .865 .875- .865	.375-.370 .375-.370 .375-.370	.365-.359 .365-.359 .365-.359	.062 .062 .062	11. 13. 17.
3/16 1/4 5/16	1	13 15 B	74152-S 74153-S 74154-S	74182-S 74183-S 74184-S	.1885-.1875 .2510-.2500 .3135-.3125	1.000- .990 1.000- .990 1.000- .990	.438-.433 .438-.433 .438-.433	.428-.422 .428-.422 .428-.422	.062 .062 .062	17. 23. 29.
3/16 1/4 5/16	1 1/8	16 18 C	74155-S 74156-S 74157-S	74185-S 74186-S 74187-S	.1885-.1875 .2510-.2500 .3135-.3125	1.125-1.115 1.125-1.115 1.125-1.115	.484-.479 .484-.479 .484-.479	.475-.469 .475-.469 .475-.469	.078 .078 .078	22. 29. 36.
1/4 5/16 3/8	1 1/4	21 D E	74158-S 74159-S 74160-S	74188-S 74189-S 74190-S	.2510-.2500 .3135-.3125 .3760-.3750	1.250-1.240 1.250-1.240 1.250-1.240	.547-.542 .547-.542 .547-.542	.537-.531 .537-.531 .537-.531	.078 .078 .078	36. 45. 54.
1/4 5/16 3/8	1 3/8	22 23 F	74161-S 74162-S 74163-S	74191-S 74192-S 74193-S	.2510-.2500 .3135-.3125 .3760-.3750	1.375-1.365 1.375-1.365 1.375-1.365	.594-.589 .594-.589 .594-.589	.584-.578 .584-.578 .584-.578	.093 .093 .093	43. 54. 65.
1/4 5/16 3/8	1 1/2	24 25 G	74164-S 74165-S 74166-S	74194-S 74195-S 74196-S	.2510-.2500 .3135-.3125 .3760-.3750	1.500-1.490 1.500-1.490 1.500-1.490	.641-.636 .641-.636 .641-.636	.631-.625 .631-.625 .631-.625	.109 .109 .109	50. 63. 75.

NOTES:

For Finishes See Addendum.

PLUG BUTTONS

STANDARD PARTS

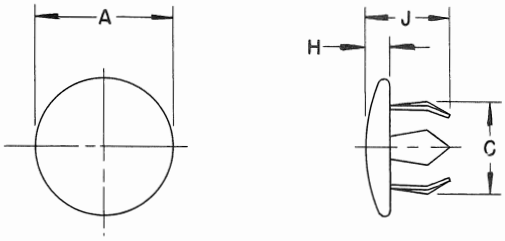

Ford Part Numbers	FOR USE IN		A	J	C	H	No. of Prongs	Material
	Hole Dia.	Matl. Thick.						
74200-S	1/8	.050-.078	.328	.203	.141	.063	4	SAE 1010 Steel
74201-S	3/16	.037-.062	.344	.219	.203	.063	6	SAE 1010 Steel
74202-S	13/64	.037-.046	.344	.219	.219	.078	6	SAE 1010 Steel
74203-S	7/32	.062-.078	.344	.219	.234	.063	6	SAE 70-B Brass
74204-S	1/4	.062-.078	.406	.250	.266	.078	6	SAE 70-B Brass
74207-S	17/64	.037-.078	.438	.359	.281	.188	6	SAE 70-B Brass
74208-S	9/32	.032-.078	.406	.250	.299	.078	6	SAE 1010 Steel
74205-S	5/16	.020-.062	.438	.219	.328	.063	6	SAE 70-B Brass
74206-S	5/16	.062-.078	.438	.250	.328	.063	6	SAE 1010 Steel
74209-S	21/64	.037-.062	.438	.250	.344	.063	6	SAE 70-B Brass
74210-S	11/32	.037-.062	.500	.219	.359	.063	6	SAE 1010 Steel
74230-S	11/32	.093-.125	.531	.344	.375	.094	6	SAE 1010 Steel
74231-S	23/64	.025-.093	.563	.266	.375	.078	6	SAE 1010 Steel
74232-S	3/8	.032-.078	.531	.391	.406	.078	6	SAE 70-B Brass
74211-S	3/8	.125-.156	.531	.375	.391	.078	6	SAE 1010 Steel
74233-S	25/64	.078-.090	.500	.234	.406	.063	6	SAE 1010 Steel
74212-S	13/32	.062-.078	.500	.203	.422	.063	6	SAE 1010 Steel
74234-S	7/16	.020-.078	.656	.219	.469	.078	8	SAE 1010 Steel
74235-S	29/64	.050-.062	.656	.250	.469	.078	8	SAE 70-B Brass
74213-S	15/32	.125-.171	.625	.375	.484	.063	6	SAE 1010 Steel
74236-S	31/64	.125-.156	.625	.375	.500	.078	6	SAE 1045 Steel
74214-S	1/2	.037-.062	.656	.266	.531	.078	8	SAE 1010 Steel
74237-S	1/2	.093-.125	.625	.344	.531	.063	6	SAE 70-B Brass
74215-S	33/64	.037-.062	.656	.266	.531	.078	8	SAE 1010 Steel
74238-S	17/32	.050-.062	.656	.266	.547	.078	8	SAE 1010 Steel
74216-S	17/32	.125-.156	.688	.375	.547	.078	8	SAE 70-B Brass
74217-S	9/16	.062-.078	.719	.281	.594	.063	8	SAE 1010 Steel
74218-S	5/8	.062-.078	.797	.281	.641	.078	8	SAE 1010 Steel
74239-S	5/8	.109-.125	.797	.313	.656	.078	8	SAE 1010 Steel
74240-S	41/64	.020-.040	.797	.281	.656	.078	8	SAE 1010 Steel
74219-S	11/16	.037-.062	.875	.266	.703	.078	12	SAE 1010 Steel
74241-S	23/32	.078-.093	.875	.266	.734	.078	12	SAE 1010 Steel
74220-S	3/4	.037-.093	.938	.297	.766	.094	12	SAE 1010 Steel
74242-S	3/4	.109-.125	.938	.359	.766	.094	12	SAE 1010 Steel
74243-S	13/16	.046-.078	1.047	.281	.844	.078	12	SAE 1010 Steel
74244-S	27/32	.046-.078	1.047	.281	.859	.078	12	SAE 1010 Steel
74221-S	7/8	.062-.093	1.063	.297	.891	.063	12	SAE 1010 Steel
74222-S	7/8	.125-.171	1.063	.359	.906	.078	12	SAE 1010 Steel
74245-S	29/32	.031-.062	1.000	.344	.922	.125	12	SAE 1010 Steel
74246-S	15/16	.062-.078	1.156	.281	.969	.063	12	SAE 1010 Steel
74247-S	61/64	.032-.062	1.156	.250	.969	.047	12	SAE 70-B Brass
74223-S	63/64	.046-.062	1.156	.297	1.000	.094	12	SAE 70-B Brass
74224-S	1	.062-.078	1.156	.297	1.031	.078	12	SAE 1010 Steel
74248-S	1	.109-.125	1.156	.375	1.031	.078	12	SAE 1010 Steel
74249-S	1 1/16	.062-.075	1.313	.297	1.094	.094	12	SAE 1010 Steel
74250-S	1 1/8	.050-.078	1.313	.344	1.156	.094	12	SAE 1010 Steel
74251-S	1 5/32	.037-.078	1.344	.344	1.172	.094	12	SAE 1010 Steel
74252-S	1 3/16	.062-.078	1.438	.297	1.203	.078	12	SAE 1010 Steel
74253-S	1 7/32	.037-.078	1.438	.328	1.234	.078	12	SAE 1010 Steel
74254-S	1 1/4	.037-.078	1.438	.344	1.266	.094	12	SAE 1045 Steel
74225-S	1 1/4	.062-.093	1.438	.313	1.266	.094	12	SAE 1010 Steel
74255-S	1 5/16	.037-.062	1.563	.359	1.328	.094	12	SAE 1010 Steel
74256-S	1 3/8	.037-.044	1.563	.406	1.422	.109	12	SAE 1010 Steel
74257-S	1 3/8	.125-.140	1.563	.406	1.391	.094	12	SAE 1010 Steel
74226-S	1 7/16	.125-.140	1.609	.438	1.469	.109	12	SAE 1010 Steel
74227-S	1 1/2	.037-.062	1.641	.406	1.531	.094	12	SAE 1010 Steel
74228-S	1 5/8	.062-.109	1.797	.344	1.656	.125	12	SAE 1010 Steel
74258-S	1 3/4	.037-.078	1.938	.344	1.781	.125	12	SAE 1045 Steel
74259-S	1 25/32	.045-.093	1.938	.438	1.813	.094	12	SAE 1010 Steel
74260-S	1 7/8	.062-.140	2.188	.500	1.891	.219	14	SAE 1010 Steel
74261-S	2	.037-.125	2.313	.500	2.031	.219	14	SAE 1010 Steel
74262-S	2 3/32	.046-.062	2.563	.563	2.125	.219	14	SAE 1010 Steel
74229-S	2 1/4	.037-.093	2.563	.500	2.281	.219	14	SAE 1045 Steel
74263-S	2 1/2	.037-.109	2.813	.344	2.531	.094	16	SAE 1010 Steel
74264-S	3	.093-.156	3.313	.641	3.063	.234	12	SAE 1010 Steel

NOTES: For Finishes See Addendum.
Plug Buttons should securely assemble into holes of the specified diameter, which have been punched or drilled into material of the given thickness. The inspection should be based on suitability of the plugs for the purpose intended and on their proper functioning, rather than on exact dimensional accuracy.

CLEVISES

FORD MOTOR COMPANY

NON-ADJUSTABLE

STANDARD PARTS

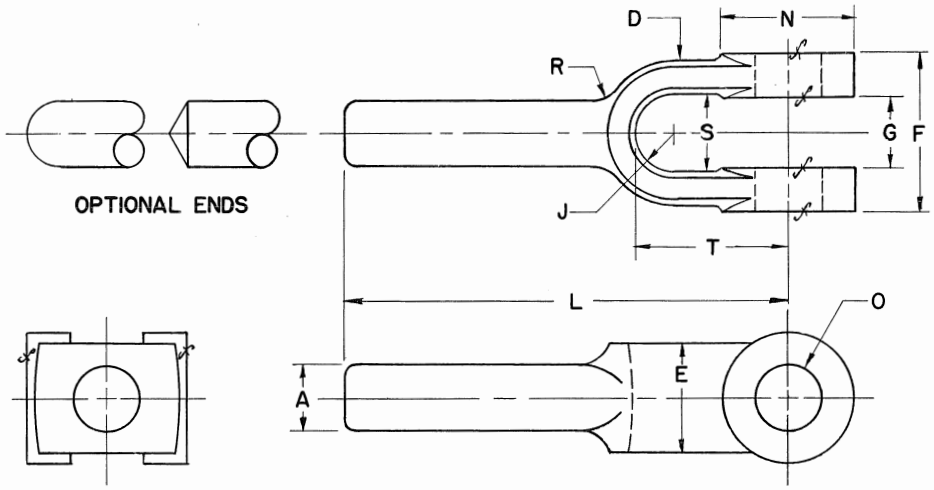

A	Rod Size	#10	1/4	5/16	3/8	7/16	1/2	5/8
O	Hole Diameter	.1885 .1865	.2510 .2490	.3135 .3110	.3760 .3740	.4385 .4360	.5010 .4980	.6260 .6230
G	Width, Inside	.1975 .1775	.2912 .2712	.3537 .3337	.4475 .4275	.5100 .4900	.5725 .5525	.6975 .6775
F	Width, Outside	.4475 .4275	.6350 .6150	.7600 .7400	.8850 .8650	1.010 .990	1.135 1.115	1.385 1.365
N	Boss Diameter	.375	.500	.594	.688	.813	.938	1.188
S	Slot Width	.219	.313	.375	.469	.531	.594	.719
T	Slot Length	.438	.625	.750	.844	1.000	1.125	1.438
E	Body Width	.313	.438	.500	.625	.719	.813	1.063
D	Web Thickness	.094	.141	.172	.188	.219	.250	.313
J	Radius. Inside	.109	.156	.188	.234	.266	.297	.359
R	Radius, Outside	.094	.141	.172	.188	.219	.250	.313
L	Length	1 1/4	1 3/4	2	2 1/8	2 1/4	2 1/2	2 7/8
	FORD PART NUMBERS	97000-S	97001-S	97002-S	97003-S	97004-S	97005-S	97007-S

Notes: For Finishes See Addendum.
Material: SAE 1120 steel or SAE 1018 steel or equivalent. Rockwell hardness of B-70 minimum.
Clevises shall be free from burrs, loose scale sharp edges and all other defects that might affect their serviceability.

CLEVISES

CLASS 2B

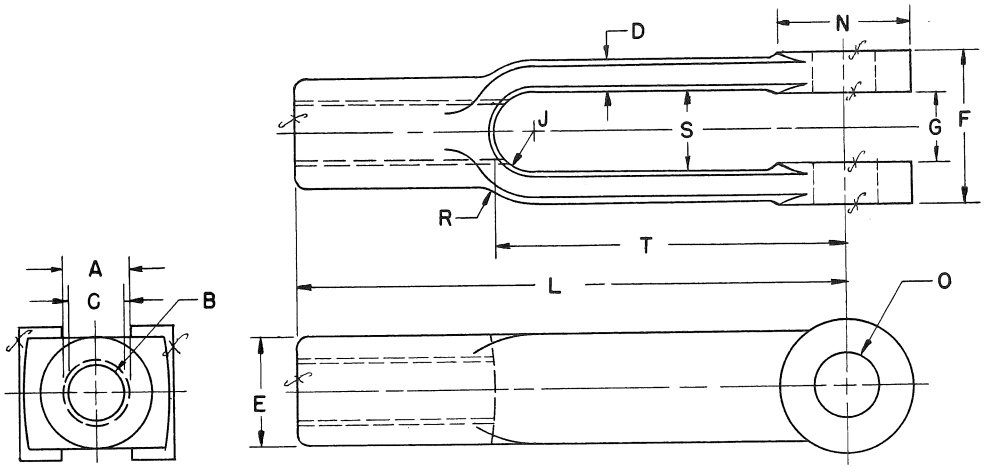

		#10	1/4	5/16	3/8	7/16	1/2	5/8	3/4	7/8
A	Major Dia. Thd.-Min.	.1900	.2500	.3125	.3750	.4375	.5000	.6250	.7500	.8750
B	Threads per Inch	32	28	24	24	20	20	18	16	14
	Pitch Diameter	.1736 .1697	.2311 .2268	.2902 .2854	.3528 .3479	.4104 .4050	.4731 .4675	.5949 .5889	.7159 .7094	.8356 .8286
C	Minor Dia. Thread	.1641 .1562	.2190 .2113	.2754 .2674	.3372 .3299	.3916 .3834	.4537 .4459	.5730 .5649	.6908 .6823	.8068 .7977
O	Hole Diameter	.1885 .1865	.2510 .2490	.3135 .3110	.3760 .3740	.4385 .4360	.5010 .4980	.6260 .6230	.7510 .7480	.8760 .8730
G	Width, Inside	.1975 .1775	.2912 .2712	.3537 .3337	.4475 .4275	.5100 .4900	.5725 .5525	.6975 .6775	.8225 .8025	.9475 .9275
F	Width, Outside	.4475 .4275	.6350 .6150	.7600 .7400	.8850 .8650	1.010 .990	1.135 1.115	1.3850 1.3650	1.6350 1.6150	1.8850 1.8650
N	Boss Diameter	.375	.500	.594	.688	.813	.938	1.1875	1.4375	1.6875
S	Slot Width	.219	.313	.375	.469	.531	.594	.719	.844	.969
T	Slot Length	1.000	1.250	1.438	1.625	1.875	1.875	3.6875	4.5625	5.2500
E	Body Diameter	.313	.438	.500	.625	.719	.813	1.063	1.250	1.438
D	Web Thickness	.094	.141	.172	.188	.219	.250	.313	.375	.438
J	Radius, Inside	.109	.156	.188	.234	.266	.297	.359	.422	.484
R	Radius, Outside	.094	.141	.172	.188	.219	.250	.313	.375	.438
L	Length	1 9/16	2	2 1/4	2 1/2	2 7/8	3	4 15/16	6 1/16	7 1/8
	FORD PART NUMBERS	97010-S	97011-S	97012-S	97013-S	97014-S	97015-S	97016-S	97017-S	97018-S

NOTES: For Finishes See Addendum.
Material: SAE 1120 steel or SAE 1018 steel or equivalent. Rockwell Hardness of B-70 minimum.
Clevises shall be free from burrs, loose scale sharp edges and all other defects that might affect their serviceability.

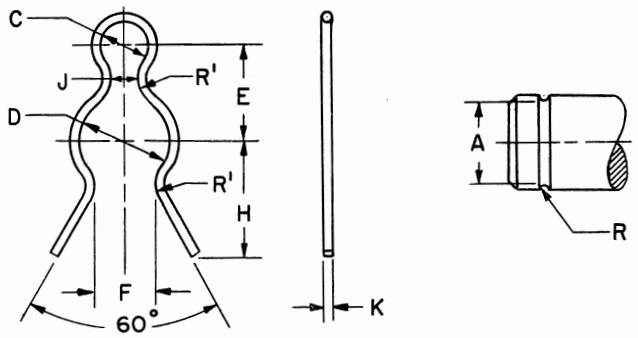

A	3/32	1/8	3/16	1/4	5/16	3/8	7/16	1/2	9/16	5/8	11/16	3/4	13/16	7/8	15/16
C	.047	.062	.094	.125	.156	.188	.219	.250	.281	.312	.344	.375	.406	.438	.469
D	.062	.094	.156	.219	.281	.344	.406	.469	.531	.594	.656	.719	.781	.844	.906
E	.094	.125	.188	.250	.312	.375	.438	.500	.562	.625	.688	.750	.812	.875	.938
F	.047	.062	.094	.156	.188	.250	.281	.312	.375	.406	.469	.500	.562	.594	.625
H	.125	.156	.219	.312	.375	.469	.531	.625	.688	.781	.844	.938	1.000	1.094	1.156
J	.031	.031	.031	.062	.094	.125	.156	.156	.188	.188	.219	.250	.250	.281	.312
K	.026	.026	.026	.062	.062	.062	.106	.106	.106	.135	.135	.135	.177	.177	.177
R	.018	.018	.018	.036	.036	.036	.058	.058	.058	.073	.073	.073	.094	.094	.094
R'	.062	.062	.062	.094	.125	.156	.188	.188	.219	.250	.281	.312	.312	.344	.375

FORD PART NUMBERS

74271-S	74272-S	74273-S	74274-S	74275-S	74276-S	74277-S	74278-S	74279-S	74280-S	74281-S	74282-S	74283-S	74284-S	74285-S

NOTES: For Finishes See Addendum.
MATERIAL: Hard Drawn Steel Wire (M-3199A).
TESTS: Springs must be capable of withstanding repeated assembly and disassembly without appreciable loss of spring quality. These springs must be free from burrs, loose scale, sharp edges and all other defects that might affect their serviceability.

COTTER PINS

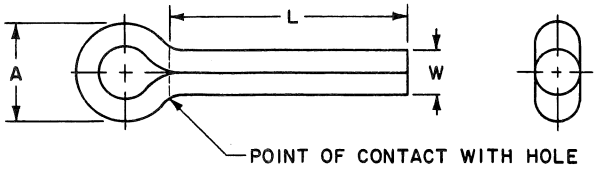

OPTIONAL ENDS

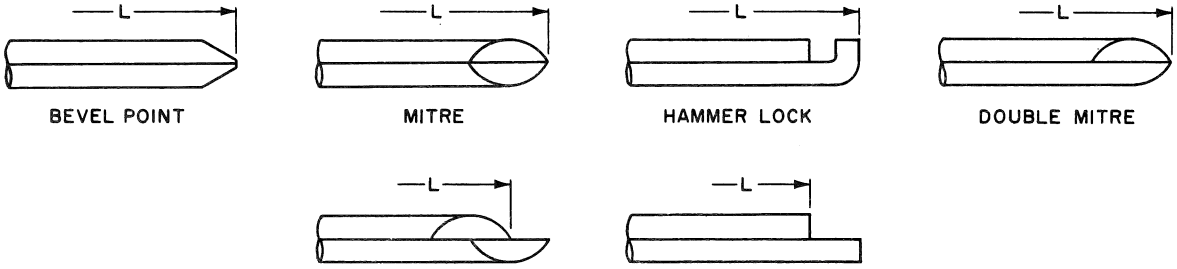

	Pin Size	1/16	3/32	1/8	5/32	3/16	7/32	1/4	5/16	3/8
W	Diameter	.060 .056	.090 .086	.120 .116	.150 .146	.176 .172	.207 .202	.225 .220	.280 .275	.335 .329
A	Outside Eye Diameter - Min.	.12	.19	.25	.31	.38	.44	.50	.62	.75
	Drill Sizes Recommended	5/64	7/64	9/64	11/64	13/64	15/64	17/64	5/16	3/8
	MATERIAL	Steel - SAE 1008 or Equivalent				FORD PART NUMBERS				
L	3/8 1/2	72000-S 72003-S	72001-S 72004-S	72002-S 72005-S	72006-S	72007-S				
	5/8 3/4 7/8 1	72008-S 72015-S 72024-S 72033-S	72009-S 72016-S 72025-S 72034-S	72010-S 72017-S 72026-S 72035-S	72011-S 72018-S 72027-S 72036-S	72012-S 72019-S 72028-S 72037-S	72013-S 72020-S 72029-S 72038-S	72014-S 72021-S 72030-S 72039-S	72022-S 72031-S 72040-S	72023-S 72032-S 72041-S
L E N G T H	1 1/8 1 1/4 1 3/8 1 1/2	72042-S 72051-S 72060-S 72069-S	72043-S 72052-S 72061-S 72070-S	72044-S 72053-S 72062-S 72071-S	72045-S 72054-S 72063-S 72072-S	72046-S 72055-S 72064-S 72073-S	72047-S 72056-S 72065-S 72074-S	72048-S 72057-S 72066-S 72075-S	72049-S 72058-S 72067-S 72076-S	72050-S 72059-S 72068-S 72077-S
	1 5/8 1 3/4 1 7/8 2	72078-S 72087-S 72096-S 72105-S	72079-S 72088-S 72097-S 72106-S	72080-S 72089-S 72098-S 72107-S	72081-S 72090-S 72099-S 72108-S	72082-S 72091-S 72100-S 72109-S	72083-S 72092-S 72101-S 72110-S	72084-S 72093-S 72102-S 72111-S	72085-S 72094-S 72103-S 72112-S	72086-S 72095-S 72104-S 72113-S
	2 1/8 2 1/4 2 3/8 2 1/2	72114-S 72123-S 72132-S 72141-S	72115-S 72124-S 72133-S 72142-S	72116-S 72125-S 72134-S 72143-S	72117-S 72126-S 72135-S 72144-S	72118-S 72127-S 72136-S 72145-S	72119-S 72128-S 72137-S 72146-S	72120-S 72129-S 72138-S 72147-S	72121-S 72130-S 72139-S 72148-S	72122-S 72131-S 72140-S 72149-S
	2 5/8 2 3/4 2 7/8 3			72150-S 72157-S	72151-S 72158-S	72152-S 72159-S 72164-S 72169-S	72153-S 72160-S 72165-S 72170-S	72154-S 72161-S 72166-S 72171-S	72155-S 72162-S 72167-S 72172-S	72156-S 72163-S 72168-S 72173-S

NOTES: For General Specifications see Page J-950.01. For Finishes see Section "Z" Addendum.

FORD MOTOR COMPANY
STANDARD PARTS

RETAINER SPRINGS

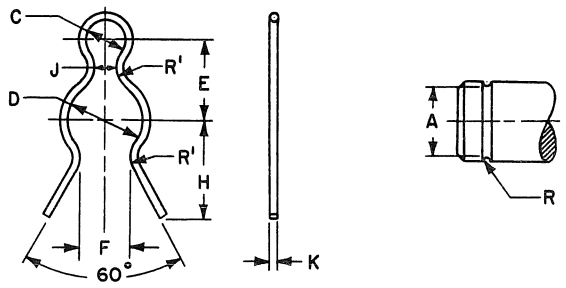

A	3/32	1/8	3/16	1/4	5/16	3/8	7/16	1/2	9/16	5/8	11/16	3/4	13/16	7/8	15/16
C	.047	.062	.094	.125	.156	.188	.219	.250	2.81	.312	.344	.375	.406	.438	.469
D	.062	.094	.156	.219	.281	.344	.406	.469	.531	.594	.656	.719	.781	.844	.906
E	.094	.125	.188	.250	.312	.375	.438	.500	.562	.625	.688	.750	.812	.875	.938
F	.047	.062	.094	.156	.188	.250	.281	.312	.375	.406	.469	.500	.562	.594	.625
H	.125	.156	.219	.312	.375	.469	.531	.625	.688	.781	.844	.938	1.000	1.094	1.156
J	.031	.031	.031	.062	.094	.125	.156	.156	.188	.188	.219	.250	.250	.281	.312
K	.026	.026	.026	.062	.062	.062	.106	.106	.106	.135	.135	.135	.177	.177	.177
R	.018	.018	.018	.036	.036	.036	.058	.058	.058	.073	.073	.073	.094	.094	.094
R'	.062	.062	.062	.094	.125	.156	.188	.188	.219	.250	.281	.312	.312	.344	.375
FORD PART NUMBERS															
	74271-S	74272-S	74273-S	74274-S	74275-S	74276-S	74277-S	74278-S	74279-S	74280-S	74281-S	74282-S	74283-S	74284-S	74285-S

NOTES: For General Specifications see Page J-950.01. For Finishes see Section "Z" Addendum.
MATERIAL: Steel - M-3199-A, Hard Drawn Wire.

FORD MOTOR COMPANY
STANDARD PARTS

STRAIGHT PINS — SQUARE END

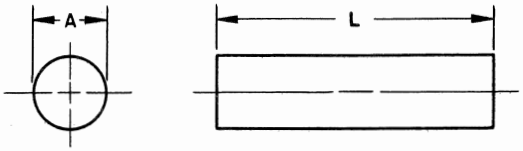

	Pin Size	1/16	3/32	1/8	5/32	3/16	7/32	1/4	9/32	5/16	3/8
A	Diameter	.0625 .0605	.0937 .0917	.1250 .1230	.1562 .1542	.1875 .1855	.2187 .2167	.2500 .2480	.2812 .2792	.3125 .3095	.3750 .3720
	MATERIAL:	Steel - M-3422-A				FORD PART NUMBERS					
L	1/4 5/16 3/8	72350-S 72356-S 72363-S	72351-S 72357-S 72364-S	72352-S 72358-S 72365-S	72353-S 72359-S 72366-S	72354-S 72360-S 72367-S	72355-S 72361-S 72368-S	72362-S 72369-S	72370-S		
	7/16 1/2 9/16 5/8	72371-S 72380-S 72390-S 72400-S	72372-S 72381-S 72391-S 72401-S	72373-S 72382-S 72392-S 72402-S	72374-S 72383-S 72393-S 72403-S	72375-S 72384-S 72394-S 72404-S	72376-S 72385-S 72395-S 72405-S	72377-S 72386-S 72396-S 72406-S	72378-S 72387-S 72397-S 72407-S	72379-S 72388-S 72398-S 72408-S	72389-S 72399-S 72409-S
LENGTH	11/16 3/4 13/16 7/8	72410-S 72420-S 72430-S 72440-S	72411-S 72421-S 72431-S 72441-S	72412-S 72422-S 72432-S 72442-S	72413-S 72423-S 72433-S 72443-S	72414-S 72424-S 72434-S 72444-S	72415-S 72425-S 72435-S 72445-S	72416-S 72426-S 72436-S 72446-S	72417-S 72427-S 72437-S 72447-S	72418-S 72428-S 72438-S 72448-S	72419-S 72429-S 72439-S 72449-S
	15/16 1 1 1/8 1 1/4	72450-S 72460-S 72470-S 72480-S	72451-S 72461-S 72471-S 72481-S	72452-S 72462-S 72472-S 72482-S	72453-S 72463-S 72473-S 72483-S	72454-S 72464-S 72474-S 72484-S	72455-S 72465-S 72475-S 72485-S	72456-S 72466-S 72476-S 72486-S	72457-S 72467-S 72477-S 72487-S	72458-S 72468-S 72478-S 72488-S	72459-S 72469-S 72479-S 72489-S
	1 3/8 1 1/2 1 5/8 1 3/4	72490-S	72491-S 72500-S 72509-S 72518-S	72492-S 72501-S 72510-S 72519-S	72493-S 72502-S 72511-S 72520-S	72494-S 72503-S 72512-S 72521-S	72495-S 72504-S 72513-S 72522-S	72496-S 72505-S 72514-S 72523-S	72497-S 72506-S 72515-S 72524-S	72498-S 72507-S 72516-S 72525-S	72499-S 72508-S 72517-S 72526-S
	1 7/8 2 2 1/4 2 1/2		72527-S	72528-S	72529-S	72530-S	72531-S 72536-S 72541-S	72532-S 72537-S 72542-S 72546-S	72533-S 72538-S 72543-S 72547-S	72534-S 72539-S 72544-S 72548-S	72535-S 72540-S 72545-S 72549-S
	MATERIAL:	Brass SAE 72				FORD PART NUMBERS					
L	1/4 5/16 3/8	72575-S 72581-S 72588-S	72576-S 72582-S 72589-S	72577-S 72583-S 72590-S	72578-S 72584-S 72591-S	72579-S 72585-S 72592-S	72580-S 72586-S 72593-S	72587-S 72594-S	72595-S		
	7/16 1/2 9/16 5/8	72596-S 72605-S 72615-S 72625-S	72597-S 72606-S 72616-S 72626-S	72598-S 72607-S 72617-S 72627-S	72599-S 72608-S 72618-S 72628-S	72600-S 72609-S 72619-S 72629-S	72601-S 72610-S 72620-S 72630-S	72602-S 72611-S 72621-S 72631-S	72603-S 72612-S 72622-S 72632-S	72604-S 72613-S 72623-S 72633-S	72614-S 72624-S 72634-S
LENGTH	11/16 3/4 13/16 7/8	72635-S 72645-S 72655-S 72665-S	72636-S 72646-S 72656-S 72666-S	72637-S 72647-S 72657-S 72667-S	72638-S 72648-S 72658-S 72668-S	72639-S 72649-S 72659-S 72669-S	72640-S 72650-S 72660-S 72670-S	72641-S 72651-S 72661-S 72671-S	72642-S 72652-S 72662-S 72672-S	72643-S 72653-S 72663-S 72673-S	72644-S 72654-S 72664-S 72674-S
	15/16 1 1 1/8 1 1/4	72675-S 72685-S 72695-S 72705-S	72676-S 72686-S 72696-S 72706-S	72677-S 72687-S 72697-S 72707-S	72678-S 72688-S 72698-S 72708-S	72679-S 72689-S 72699-S 72709-S	72680-S 72690-S 72700-S 72710-S	72681-S 72691-S 72701-S 72711-S	72682-S 72692-S 72702-S 72712-S	72683-S 72693-S 72703-S 72713-S	72684-S 72694-S 72704-S 72714-S
	1 3/8 1 1/2 1 5/8 1 3/4	72715-S	72716-S 72725-S 72734-S 72743-S	72717-S 72726-S 72735-S 72744-S	72718-S 72727-S 72736-S 72745-S	72719-S 72728-S 72737-S 72746-S	72720-S 72729-S 72738-S 72747-S	72721-S 72730-S 72739-S 72748-S	72722-S 72731-S 72740-S 72749-S	72723-S 72732-S 72741-S 72750-S	72724-S 72733-S 72742-S 72751-S
	1 7/8 2 2 1/4 2 1/2		72752-S	72753-S	72754-S	72755-S	72756-S 72761-S 72766-S	72757-S 72762-S 72767-S 72771-S	72758-S 72763-S 72768-S 72772-S	72759-S 72764-S 72769-S 72773-S	72760-S 72765-S 72770-S 72774-S

NOTES: For General Specifications see Page J-950.01. For Finishes see Section "Z" Addendum.

FORD MOTOR COMPANY
STANDARD PARTS

STRAIGHT PINS — CHAMFERED END

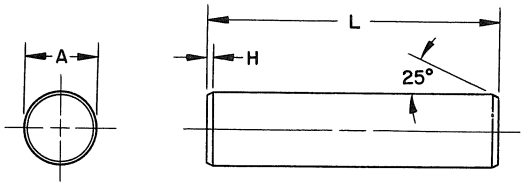

	Pin Size	1/16	3/32	1/8	5/32	3/16	7/32	1/4	9/32	5/16	3/8
A	Diameter	.0625 .0605	.0937 .0917	.1250 .1230	.1562 .1542	.1875 .1855	.2187 .2167	.2500 .2480	.2812 .2792	.3125 .3095	.3750 .3720
H	Chamfer Length	.015	.015	.015	.015	.015	.015	.015	.030	.030	.030
	MATERIAL:	Steel - M-3422-A				FORD PART NUMBERS					
L	1/4 5/16 3/8	72775-S 72781-S 72788-S	72776-S 72782-S 72789-S	72777-S 72783-S 72790-S	72778-S 72784-S 72791-S	72779-S 72785-S 72792-S	72780-S 72786-S 72793-S	72787-S 72794-S	72795-S		
	7/16 1/2 9/16 5/8	72796-S 72805-S 72815-S 72825-S	72797-S 72806-S 72816-S 72826-S	72798-S 72807-S 72817-S 72827-S	72799-S 72808-S 72818-S 72828-S	72800-S 72809-S 72819-S 72829-S	72801-S 72810-S 72820-S 72830-S	72802-S 72811-S 72821-S 72831-S	72803-S 72812-S 72822-S 72832-S	72804-S 72813-S 72823-S 72833-S	72814-S 72824-S 72834-S
LENGTH	11/16 3/4 13/16 7/8	72835-S 72845-S 72855-S 72865-S	72836-S 72846-S 72856-S 72866-S	72837-S 72847-S 72857-S 72867-S	72838-S 72848-S 72858-S 72868-S	72839-S 72849-S 72859-S 72869-S	72840-S 72850-S 72860-S 72870-S	72841-S 72851-S 72861-S 72871-S	72842-S 72852-S 72862-S 72872-S	72843-S 72853-S 72863-S 72873-S	72844-S 72854-S 72864-S 72874-S
	15/16 1 1 1/8 1 1/4	72875-S 72885-S 72895-S 72905-S	72876-S 72886-S 72896-S 72906-S	72877-S 72887-S 72897-S 72907-S	72878-S 72888-S 72898-S 72908-S	72879-S 72889-S 72899-S 72909-S	72880-S 72890-S 72900-S 72910-S	72881-S 72891-S 72901-S 72911-S	72882-S 72892-S 72902-S 72912-S	72883-S 72893-S 72903-S 72913-S	72884-S 72894-S 72904-S 72914-S
	1 3/8 1 1/2 1 5/8 1 3/4	72915-S	72916-S 72925-S 72934-S 72943-S	72917-S 72926-S 72935-S 72944-S	72918-S 72927-S 72936-S 72945-S	72919-S 72928-S 72937-S 72946-S	72920-S 72929-S 72938-S 72947-S	72921-S 72930-S 72939-S 72948-S	72922-S 72931-S 72940-S 72949-S	72923-S 72932-S 72941-S 72950-S	72924-S 72933-S 72942-S 72951-S
	1 7/8 2 2 1/4 2 1/2		72952-S	72953-S	72954-S	72955-S	72956-S 72961-S 72966-S	72957-S 72962-S 72967-S 72971-S	72958-S 72963-S 72968-S 72972-S	72959-S 72964-S 72969-S 72973-S	72960-S 72965-S 72970-S 72974-S
	MATERIAL:	Brass - SAE 72				FORD PART NUMBERS					
L	1/4 5/16 3/8	73000-S 73006-S 73013-S	73001-S 73007-S 73014-S	73002-S 73008-S 73015-S	73003-S 73009-S 73016-S	73004-S 73010-S 73017-S	73005-S 73011-S 73018-S	73012-S 73019-S	73020-S		
	7/16 1/2 9/16 5/8	73021-S 73030-S 73040-S 73050-S	73022-S 73031-S 73041-S 73051-S	73023-S 73032-S 73042-S 73052-S	73024-S 73033-S 73043-S 73053-S	73025-S 73034-S 73044-S 73054-S	73026-S 73035-S 73045-S 73055-S	73027-S 73036-S 73046-S 73056-S	73028-S 73037-S 73047-S 73057-S	73029-S 73038-S 73048-S 73058-S	73039-S 73049-S 73059-S
LENGTH	11/16 3/4 13/16 7/8	73060-S 73070-S 73080-S 73090-S	73061-S 73071-S 73081-S 73091-S	73062-S 73072-S 73082-S 73092-S	73063-S 73073-S 73083-S 73093-S	73064-S 73074-S 73084-S 73094-S	73065-S 73075-S 73085-S 73095-S	73066-S 73076-S 73086-S 73096-S	73067-S 73077-S 73087-S 73097-S	73068-S 73078-S 73088-S 73098-S	73069-S 73079-S 73089-S 73099-S
	15/16 1 1 1/8 1 1/4	73100-S 73110-S 73120-S 73130-S	73101-S 73111-S 73121-S 73131-S	73102-S 73112-S 73122-S 73132-S	73103-S 73113-S 73123-S 73133-S	73104-S 73114-S 73124-S 73134-S	73105-S 73115-S 73125-S 73135-S	73106-S 73116-S 73126-S 73136-S	73107-S 73117-S 73127-S 73137-S	73108-S 73118-S 73128-S 73138-S	73109-S 73119-S 73129-S 73139-S
	1 3/8 1 1/2 1 5/8 1 3/4	73140-S	73141-S 73150-S 73159-S 73168-S	73142-S 73151-S 73160-S 73169-S	73143-S 73152-S 73161-S 73170-S	73144-S 73153-S 73162-S 73171-S	73145-S 73154-S 73163-S 73172-S	73146-S 73155-S 73164-S 73173-S	73147-S 73156-S 73165-S 73174-S	73148-S 73157-S 73166-S 73175-S	73149-S 73158-S 73167-S 73176-S
	1 7/8 2 2 1/4 2 1/2		73177-S	73178-S	73179-S	73180-S	73181-S 73186-S 73191-S	73182-S 73187-S 73192-S 73196-S	73183-S 73188-S 73193-S 73197-S	73184-S 73189-S 73194-S 73198-S	73185-S 73190-S 73195-S 73199-S

NOTES: For General Specifications see Page J-950.01. For Finishes see Section "Z" Addendum.

FORD MOTOR COMPANY
STANDARD PARTS

SPRING PINS — ROLLED

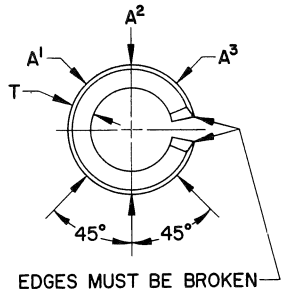

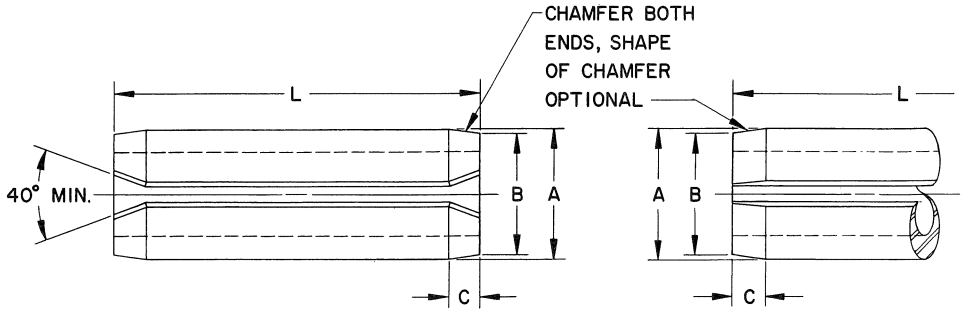

OPTIONAL DESIGNS

	Pin Size	1/16	5/64	3/32	1/8	5/32	3/16	7/32	1/4	5/16	3/8	1/2
A	Diameter	.069 .066	.086 .083	.103 .099	.135 .131	.167 .162	.199 .194	.232 .226	.264 .258	.328 .321	.392 .385	.521 .513
B	Chamfer Diameter (Max.)	.059	.075	.091	.122	.151	.182	.214	.245	.306	.368	.485
C	Chamfer Length (Max.)	.028	.032	.038	.044	.048	.055	.065	.065	.080	.095	.110
T	Stock Thickness (Nom.)	.012	.018	.022	.028	.032	.040	.048	.048	.062	.077	.094
	Rec. Hole Size	.0650 .0615	.0810 .0771	.0970 .0927	.1290 .1240	.1600 .1552	.1920 .1865	.2240 .2177	.2560 .2490	.3180 .3110	.3820 .3735	.5100 .4980
	Minimum Double Shear Strength (Lbs.)	425	650	1000	2100	3000	4400	5700	7700	11500	17600	25800
	MATERIAL	Steel SAE 1070 - 1095					FORD PART NUMBERS					
L	3/16 1/4 5/16 3/8	305009-S 305010-S 305013-S 305016-S	306300-S 305011-S 305014-S 305017-S	305012-S 305015-S 305018-S	305019-S							
	7/16 1/2 9/16 5/8	305020-S 305024-S 305030-S 305036-S	305021-S 305025-S 305031-S 305037-S	305022-S 305026-S 305032-S 305038-S	305023-S 305027-S 305033-S 305039-S	306301-S 305028-S 305034-S 305040-S	305029-S 305035-S 305041-S	306302-S 306304-S 306306-S	306303-S 306305-S 305042-S			
	11/16 3/4 13/16 7/8	305043-S 305049-S 306311-S 306316-S	305044-S 305050-S 305057-S 305062-S	305045-S 305051-S 305058-S 305063-S	305046-S 305052-S 305059-S 305064-S	305047-S 305053-S 305060-S 305065-S	305048-S 305054-S 305061-S 305066-S	306307-S 305055-S 306312-S 305067-S	306308-S 305056-S 306313-S 305068-S	306309-S 306314-S 306317-S	306310-S 306315-S 306318-S	
	15/16 1 1 1/8 1 1/4	306319-S 306324-S	305069-S 305074-S 305082-S 305089-S	305070-S 305075-S 305083-S 305090-S	305071-S 305076-S 305084-S 305091-S	305072-S 305077-S 305085-S 305092-S	305073-S 305078-S 305086-S 305093-S	306320-S 305079-S 305087-S 305094-S	306321-S 305080-S 305088-S 305095-S	306322-S 305081-S 306325-S 305096-S	306323-S 300386-S 306326-S 305097-S	305098-S
	1 3/8 1 1/2 1 5/8 1 3/4		305099-S 305106-S	305100-S 305107-S	305101-S 305108-S 305115-S 305120-S	305102-S 305109-S 305116-S 305121-S	305103-S 305110-S 305117-S 305122-S	305104-S 305111-S 305118-S 305123-S	305105-S 305112-S 305119-S 305124-S	306327-S 305113-S 306330-S 305125-S	306328-S 305213-S 306331-S 305126-S	306329-S 305114-S 306332-S 305127-S
	1 7/8 2 2 1/4 2 1/2				306333-S 306337-S	305128-S 305132-S 305216-S 306339-S	305129-S 305133-S 306338-S 306340-S	305130-S 305134-S 305139-S 305144-S	305131-S 305135-S 305140-S 305145-S	306334-S 305136-S 305141-S 305146-S	306335-S 305137-S 305142-S 305147-S	306336-S 305138-S 305143-S 305148-S
	2 3/4 3 3 1/4 3 1/2							306341-S 306342-S	305149-S 305153-S 305157-S 305161-S	305150-S 305154-S 305158-S 305162-S	305151-S 305155-S 305159-S 305163-S	305152-S 305156-S 305160-S 305164-S
	4									305165-S	305166-S	305167-S

NOTES: For General Specifications see Page J-950.01. For Finishes see Section "Z" Addendum.
Maximum diameter shall be checked by "GO" Ring Gages. Minimum diameter shall be the average of the A_1, A_2 and A_3 diameters.

FORD MOTOR COMPANY
STANDARD PARTS

SPRING PINS

COILED
MEDIUM DUTY

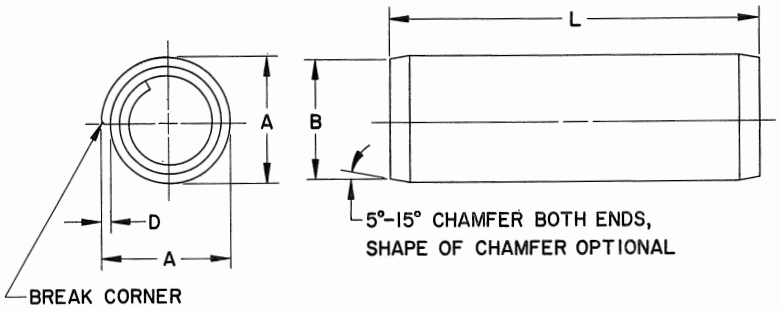

	Nominal Size	1/16	5/64	3/32	7/64	1/8	5/32	3/16	7/32	1/4	5/16	3/8
A	Diameter	.071 .067	.087 .083	.104 .099	.119 .114	.137 .131	.170 .163	.204 .196	.238 .229	.270 .260	.341 .327	.408 .391
D	Stock Thickness (Nom.)	.005	.005	.007	.007	.010	.011	.015	.017	.020	.024	.028
B	Chamfer Dia. (Max.)	.059	.075	.091	.106	.121	.152	.182	.214	.244	.306	.368
	Rec. Hole Size	.0650 .0615	.0810 .0771	.0970 .0927	.1120 .1084	.1290 .1240	.1600 .1552	.1920 .1865	.2240 .2177	.2560 .2490	.3180 .3110	.3820 .3735
	Min. Double Shear Strength (Lbs.)	300	480	690	940	1230	1920	2760	3760	4900	7670	11040
	MATERIAL	Steel SAE 1070					FORD PART NUMBERS					
L	3/16 1/4 5/16 3/8	67500-S 67502-S 67505-S 67508-S	67501-S 67503-S 67506-S 67509-S	67504-S 67507-S 67510-S	67511-S							
	7/16 1/2 9/16 5/8	67512-S 67517-S 67525-S 67533-S	67513-S 67518-S 67526-S 67534-S	67514-S 67519-S 67527-S 67535-S	67515-S 67520-S 67528-S 67536-S	67516-S 67521-S 67529-S 67537-S	67522-S 67530-S 67538-S	67523-S 67531-S 67539-S	67524-S 67532-S 67540-S	67541-S		
	11/16 3/4 13/16 7/8	67542-S 67551-S 67561-S 67571-S	67543-S 67552-S 67562-S 67572-S	67544-S 67553-S 67563-S 67573-S	67545-S 67554-S 67564-S 67574-S	67546-S 67555-S 67565-S 67575-S	67547-S 67556-S 67566-S 67576-S	67548-S 67557-S 67567-S 67577-S	67549-S 67558-S 67568-S 67578-S	67550-S 67559-S 67569-S 67579-S	67560-S 67570-S 67580-S	
	15/16 1 1 1/8 1 1/4	67581-S 67591-S 67602-S	67582-S 67592-S 67603-S 67613-S	67583-S 67593-S 67604-S 67614-S	67584-S 67594-S 67605-S 67615-S	67585-S 67595-S 67606-S 67616-S	67586-S 67596-S 67607-S 67617-S	67587-S 67597-S 67608-S 67618-S	67588-S 67598-S 67609-S 67619-S	67589-S 67599-S 67610-S 67620-S	67590-S 67600-S 67611-S 67621-S	67601-S 67612-S 67622-S
	1 3/8 1 1/2 1 5/8 1 3/4		67623-S 67633-S	67624-S 67634-S	67625-S 67635-S 67643-S 67651-S	67626-S 67636-S 67644-S 67652-S	67627-S 67637-S 67645-S 67653-S	67628-S 67638-S 67646-S 67654-S	67629-S 67639-S 67647-S 67655-S	67630-S 67640-S 67648-S 67656-S	67631-S 67641-S 67649-S 67657-S	67632-S 67642-S 67650-S 67658-S
	1 7/8 2 2 1/4 2 1/2				67659-S 67667-S	67660-S 67668-S 67675-S 67682-S	67661-S 67669-S 67676-S 67683-S	67662-S 67670-S 67677-S 67684-S	67663-S 67671-S 67678-S 67685-S	67664-S 67672-S 67679-S 67686-S	67665-S 67673-S 67680-S 67687-S	67666-S 67674-S 67681-S 67688-S
	2 3/4 3 3 1/4 3 1/2							67689-S 67694-S	67690-S 67695-S 67699-S 67703-S	67691-S 67696-S 67700-S 67704-S	67692-S 67697-S 67701-S 67705-S	67693-S 67698-S 67702-S 67706-S
	4									67707-S	67708-S	67709-S

LENGTH

NOTES: For General Specifications see Page J-950.01. For Finishes see Section "Z" Addendum.
Maximum diameter shall be checked by "GO" Ring Gages.

FORD MOTOR COMPANY
STANDARD PARTS

SPRING PINS

COILED
HEAVY DUTY

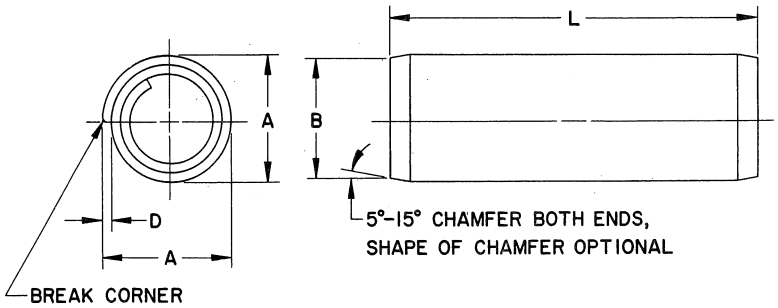

	Nominal Size	1/16	5/64	3/32	7/64	1/8	5/32	3/16	7/32	1/4	5/16	3/8
A	Diameter	.070 .066	.086 .082	.103 .098	.118 .113	.136 .130	.168 .161	.202 .194	.235 .226	.268 .258	.340 .327	.407 .391
D	Stock Thickness (Nom.)	.007	.007	.010	.010	.014	.017	.020	.024	.028	.032	.040
B	Chamfer Dia. (Max.)	.059	.075	.091	.106	.121	.152	.182	.214	.244	.306	.368
	Rec. Hole Size	.0650 .0615	.0810 .0771	.0970 .0927	.1120 .1084	.1290 .1240	.1600 .1552	.1920 .1865	.2240 .2177	.2560 .2490	.3180 .3110	.3820 .3735
	Min. Double Shear Strength (Lbs.)	460	720	1030	1410	1840	2880	4140	5640	7360	11500	16580
	MATERIAL	Steel SAE 1070				FORD PART NUMBERS						
L	3/16 1/4 5/16 3/8	67710-S 67712-S 67715-S 67718-S	67711-S 67713-S 67716-S 67719-S	67714-S 67717-S 67720-S	67721-S							
	7/16 1/2 9/16 5/8	67722-S 67727-S 67735-S 67743-S	67723-S 67728-S 67736-S 67744-S	67724-S 67729-S 67737-S 67745-S	67725-S 67730-S 67738-S 67746-S	67726-S 67731-S 67739-S 67747-S	67732-S 67740-S 67748-S	67733-S 67741-S 67749-S	67734-S 67742-S 67750-S	67751-S		
	11/16 3/4 13/16 7/8	67752-S 67761-S 67771-S 67781-S	67753-S 67762-S 67772-S 67782-S	67754-S 67763-S 67773-S 67783-S	67755-S 67764-S 67774-S 67784-S	67756-S 67765-S 67775-S 67785-S	67757-S 67766-S 67776-S 67786-S	67758-S 67767-S 67777-S 67787-S	67759-S 67768-S 67778-S 67788-S	67760-S 67769-S 67779-S 67789-S	67770-S 67780-S 67790-S	
	15/16 1 1 1/8 1 1/4	67791-S 67801-S 67811-S	67792-S 67802-S 67812-S 67822-S	67793-S 67803-S 67813-S 67823-S	67794-S 67804-S 67814-S 67824-S	67795-S 67805-S 67815-S 67825-S	67796-S 67806-S 67816-S 67826-S	67797-S 67807-S 67817-S 67827-S	67798-S 67808-S 67818-S 67828-S	67799-S 67809-S 67819-S 67829-S	67800-S 67810-S 67820-S 67930-S	67821-S 67831-S
	1 3/8 1 1/2 1 5/8 1 3/4		67832-S 67842-S	67833-S 67843-S	67834-S 67844-S 67852-S 67860-S	67835-S 67845-S 67853-S 67861-S	67836-S 67846-S 67854-S 67862-S	67837-S 67847-S 67855-S 67863-S	67838-S 67848-S 67856-S 67864-S	67839-S 67849-S 67857-S 67865-S	67840-S 67850-S 67858-S 67866-S	67841-S 67851-S 67859-S 67867-S
	1 7/8 2 2 1/4 2 1/2				67868-S 67876-S	67869-S 67877-S 67884-S 67891-S	67870-S 67878-S 67885-S 67892-S	67871-S 67879-S 67886-S 67893-S	67872-S 67880-S 67887-S 67894-S	67873-S 67881-S 67888-S 67895-S	67874-S 67882-S 67889-S 67896-S	67875-S 67883-S 67890-S 67897-S
	2 3/4 3 3 1/4 3 1/2							67898-S 67903-S	67899-S 67904-S 67908-S 67912-S	67900-S 67905-S 67909-S 67913-S	67901-S 67906-S 67910-S 67914-S	67902-S 67907-S 67911-S 67915-S
	4									67916-S	67917-S	67918-S

NOTES: For General Specifications see Page J-950.01. For Finishes see Section "Z" Addendum.
Maximum diameter shall be checked by "GO" Ring Gages.

FORD MOTOR COMPANY
STANDARD PARTS

DOWEL PINS

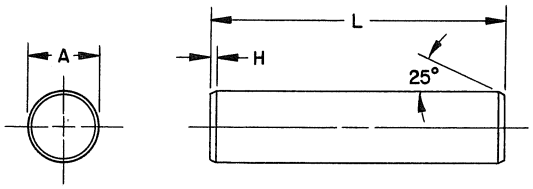

	Pin Size	1/16	3/32	1/8	5/32	3/16	7/32	1/4	9/32	5/16	3/8
A	Diameter	.0600 .0595	.0912 .0907	.1223 .1218	.1535 .1530	.1847 .1842	.2159 .2154	.2470 .2465	.2782 .2777	.3094 .3089	.3717 .3712
H	Chamfer Length	.015	.015	.015	.015	.015	.015	.015	.030	.030	.030
	Rec. Hole Size	.0595 .0580	.0907 .0892	.1217 .1202	.1528 .1513	.1840 .1825	.2151 .2136	.2462 .2447	.2773 .2758	.3085 .3070	.3708 .3693
	MATERIAL:	Steel M-3422-A				FORD PART NUMBERS					
L	1/4 5/16 3/8	73200-S 73206-S 73213-S	73201-S 73207-S 73214-S	73202-S 73208-S 73215-S	73203-S 73209-S 73216-S	73204-S 73210-S 73217-S	73205-S 73211-S 73218-S	73212-S 73219-S	73220-S		
	7/16 1/2 9/16 5/8	73221-S 73230-S 73240-S 73250-S	73222-S 73231-S 73241-S 73251-S	73223-S 73232-S 73242-S 73252-S	73224-S 73233-S 73243-S 73253-S	73225-S 73234-S 73244-S 73254-S	73226-S 73235-S 73245-S 73255-S	73227-S 73236-S 73246-S 73256-S	73228-S 73237-S 73247-S 73257-S	73229-S 73238-S 73248-S 73258-S	73239-S 73249-S 73259-S
LENGTH	11/16 3/4 13/16 7/8	73260-S 73270-S 73280-S 73290-S	73261-S 73271-S 73281-S 73291-S	73262-S 73272-S 73282-S 73292-S	73263-S 73273-S 73283-S 73293-S	73264-S 73274-S 73284-S 73294-S	73265-S 73275-S 73285-S 73295-S	73266-S 73276-S 73286-S 73296-S	73267-S 73277-S 73287-S 73297-S	73268-S 73278-S 73288-S 73298-S	73269-S 73279-S 73289-S 73299-S
	15/16 1 1 1/8 1 1/4	73300-S 73310-S 73320-S 73330-S	73301-S 73311-S 73321-S 73331-S	73302-S 73312-S 73322-S 73332-S	73303-S 73313-S 73323-S 73333-S	73304-S 73314-S 73324-S 73334-S	73305-S 73315-S 73325-S 73335-S	73306-S 73316-S 73326-S 73336-S	73307-S 73317-S 73327-S 73337-S	73308-S 73318-S 73328-S 73338-S	73309-S 73319-S 73329-S 73339-S
	1 3/8 1 1/2 1 5/8 1 3/4	73340-S	73341-S 73350-S 73359-S 73368-S	73342-S 73351-S 73360-S 73369-S	73343-S 73352-S 73361-S 73370-S	73344-S 73353-S 73362-S 73371-S	73345-S 73354-S 73363-S 73372-S	73346-S 73355-S 73364-S 73373-S	73347-S 73356-S 73365-S 73374-S	73348-S 73357-S 73366-S 73375-S	73349-S 73358-S 73367-S 73376-S
	1 7/8 2 2 1/4 2 1/2		73377-S	73378-S	73379-S	73380-S	73381-S 73386-S 73391-S	73382-S 73387-S 73392-S 73396-S	73383-S 73388-S 73393-S 73397-S	73384-S 73389-S 73394-S 73398-S	73385-S 73390-S 73395-S 73399-S
	MATERIAL:	Brass SAE 72				FORD PART NUMBERS					
L	1/4 5/16 3/8 7/16	73425-S 73431-S 73438-S 73446-S	73426-S 73432-S 73439-S 73447-S	73427-S 73433-S 73440-S 73448-S	73428-S 73434-S 73441-S 73449-S	73429-S 73435-S 73442-S 73450-S	73430-S 73436-S 73443-S 73451-S	73437-S 73444-S 73452-S	73445-S 73453-S	73454-S	
	1/2 9/16 5/8 11/16	73455-S 73465-S 73475-S 73485-S	73456-S 73466-S 73476-S 73486-S	73457-S 73467-S 73477-S 73487-S	73458-S 73468-S 73478-S 73488-S	73459-S 73469-S 73479-S 73489-S	73460-S 73470-S 73480-S 73490-S	73461-S 73471-S 73481-S 73491-S	73462-S 73472-S 73482-S 73492-S	73463-S 73473-S 73483-S 73493-S	73464-S 73474-S 73484-S 73494-S
LENGTH	3/4 13/16 7/8 15/16	73495-S 73505-S 73515-S 73525-S	73496-S 73506-S 73516-S 73526-S	73497-S 73507-S 73517-S 73527-S	73498-S 73508-S 73518-S 73528-S	73499-S 73509-S 73519-S 73529-S	73500-S 73510-S 73520-S 73530-S	73501-S 73511-S 73521-S 73531-S	73502-S 73512-S 73522-S 73532-S	73503-S 73513-S 73523-S 73533-S	73504-S 73514-S 73524-S 73534-S
	1 1 1/8 1 1/4 1 3/8	73535-S 73545-S 73555-S 73565-S	73536-S 73546-S 73556-S 73566-S	73537-S 73547-S 73557-S 73567-S	73538-S 73548-S 73558-S 73568-S	73539-S 73549-S 73559-S 73569-S	73540-S 73550-S 73560-S 73570-S	73541-S 73551-S 73561-S 73571-S	73542-S 73552-S 73562-S 73572-S	73543-S 73553-S 73563-S 73573-S	73544-S 73554-S 73564-S 73574-S

NOTES: For General Specifications see Page J-950.01. For Finishes see Section "Z" Addendum.

FORD MOTOR COMPANY
STANDARD PARTS

GROOVED PINS — TYPE A

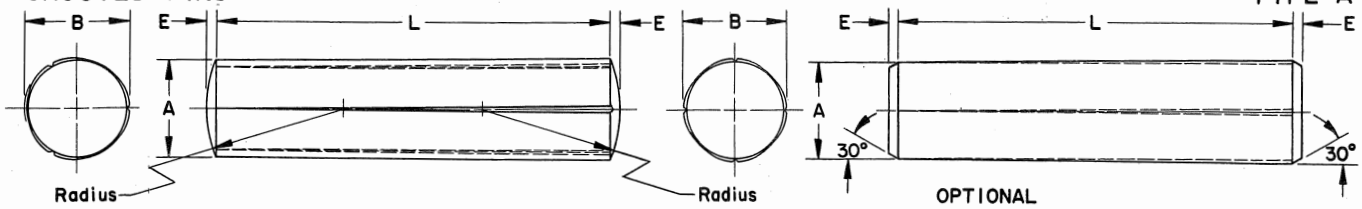

	Pin Size	1/16	5/64	3/32	7/64	1/8	5/32	3/16	7/32	1/4	5/16	3/8	7/16	1/2
A	Diameter	.0625 .0615	.0781 .0771	.0938 .0928	.1094 .1084	.1250 .1230	.1563 .1543	.1875 .1855	.2188 .2168	.2500 .2480	.3125 .3105	.3750 .3730	.4375 .4355	.5000 .4980
E	Crown Height	.0115 .0015	.0137 .0037	.0141 .0041	.0160 .0060	.0180 .0080	.0220 .0120	.0230 .0130	.0270 .0170	.0310 .0210	.0390 .0290	.0440 .0340	.0520 .0420	.0570 .0470
	Recommended Hole Size	.0640 .0625	.0798 .0781	.0956 .0938	.1113 .1094	.1271 .1250	.1587 .1563	.1903 .1875	.2219 .2188	.2534 .2500	.3166 .3125	.3797 .3750	.4428 .4375	.5060 .5000
							S Expanded Diameter							
L	1/4	.069 .067	.085 .083											
	5/16	.069 .067	.085 .083											
	3/8	.069 .067	.085 .083	.102 .100	.118 .116									
	7/16	.069 .067	.085 .083	.102 .100	.118 .116									
	1/2	.069 .067	.085 .083	.102 .100	.118 .116	.136 .132	.168 .164							
	9/16	.069 .067	.085 .083	.102 .100	.118 .116	.136 .132	.168 .164							
	5/8	.069 .067	.085 .083	.102 .100	.118 .116	.136 .132	.168 .164	.200 .196	.232 .228					
	11/16	.069 .067	.085 .083	.102 .100	.117 .115	.136 .132	.168 .164	.200 .196	.232 .228	.265 .261	.331 .327			
	3/4	.069 .067	.085 .083	.102 .100	.117 .115	.136 .132	.168 .164	.200 .196	.232 .228	.265 .261	.331 .327	.396 .392	.461 .457	
LENGTH	13/16	.069 .067	.085 .083	.102 .100	.117 .115	.135 .131	.167 .163	.200 .196	.232 .228	.265 .261	.331 .327	.396 .392	.461 .457	.527 .523
	7/8		.085 .083	.102 .100	.117 .115	.135 .131	.167 .163	.200 .196	.232 .228	.265 .261	.331 .327	.396 .392	.461 .457	.527 .523
	1		.085 .083	.102 .100	.116 .114	.135 .131	.167 .163	.200 .196	.232 .228	.265 .261	.331 .327	.396 .392	.461 .457	.527 .523
	1 1/8				.116 .114	.134 .130	.166 .162	.199 .195	.232 .228	.265 .261	.331 .327	.396 .392	.461 .457	.527 .523
	1 1/4				.116 .114	.134 .130	.166 .162	.199 .195	.232 .228	.265 .261	.331 .327	.396 .392	.461 .457	.527 .523
	1 3/8					.134 .130	.166 .162	.199 .195	.231 .227	.264 .260	.331 .327	.396 .392	.461 .457	.527 .523
	1 1/2					.134 .130	.166 .162	.199 .195	.231 .227	.264 .260	.331 .327	.396 .392	.461 .457	.527 .523
	1 5/8						.165 .161	.199 .195	.231 .227	.264 .260	.330 .326	.395 .391	.461 .457	.527 .523
	1 3/4						.165 .161	.199 .195	.231 .227	.264 .260	.330 .326	.395 .391	.461 .457	.527 .523
	1 7/8							.198 .194	.231 .227	.264 .260	.330 .326	.395 .391	.460 .456	.527 .523
	2							.198 .194	.231 .227	.264 .260	.330 .326	.395 .391	.460 .456	.527 .523
	2 1/4							.198 .194	.231 .227	.264 .260	.330 .326	.395 .391	.460 .456	.526 .522
	2 1/2								.230 .226	.263 .259	.329 .325	.395 .391	.460 .456	.526 .522
	2 3/4								.230 .226	.263 .259	.329 .325	.395 .391	.460 .456	.526 .522
	3								.229 .225	.262 .258	.329 .325	.394 .390	.459 .455	.525 .521
	MATERIAL	M-3422-A Steel					FORD PART NUMBERS							
L	1/4	72175-S 72177-S 72179-S 72183-S	72176-S 72178-S 72180-S 72184-S	72181-S 72185-S	72182-S 72186-S									
	5/16													
	3/8													
	7/16													
	1/2	72187-S 72193-S 72199-S 72207-S	72188-S 72194-S 72200-S 72208-S	72189-S 72195-S 72201-S 72209-S	72190-S 72196-S 72202-S 72210-S	72191-S 72197-S 72203-S 72211-S	72192-S 72198-S 72204-S 72212-S	72205-S 72213-S	72206-S 72214-S	72215-S	72216-S			
	9/16													
	5/8													
	11/16													
	3/4	72217-S 72227-S	72218-S 72228-S 72239-S 72250-S	72219-S 72229-S 72240-S 72251-S	72220-S 72230-S 72241-S 72252-S	72221-S 72231-S 72242-S 72253-S	72222-S 72232-S 72243-S 72254-S	72223-S 72233-S 72244-S 72255-S	72224-S 72234-S 72245-S 72256-S	72225-S 72235-S 72246-S 72257-S	72226-S 72236-S 72247-S 72258-S	72237-S 72248-S 72259-S	71916-S 71917-S 71918-S	72238-S 72249-S 72260-S
LENGTH	13/16													
	7/8													
	1													
	1 1/8				72261-S 72270-S	72262-S 72271-S 72279-S 72287-S	72263-S 72272-S 72280-S 72288-S	72264-S 72273-S 72281-S 72289-S	72265-S 72274-S 72282-S 72290-S	72266-S 72275-S 72283-S 72291-S	72267-S 72276-S 72284-S 72292-S	72268-S 72277-S 72285-S 72293-S	71919-S 71920-S 71921-S 71922-S	72269-S 72278-S 72286-S 72294-S
	1 1/4													
	1 3/8													
	1 1/2													
	1 5/8						72295-S 72302-S	72296-S 72303-S 72309-S 72315-S	72297-S 72304-S 72310-S 72316-S	72298-S 72305-S 72311-S 72317-S	72299-S 72306-S 72312-S 72318-S	72300-S 72307-S 72313-S 72319-S	71923-S 71924-S 71925-S 71926-S	72301-S 72308-S 72314-S 72320-S
	1 3/4													
	1 7/8													
	2													
	2 1/4							72321-S	72322-S 72328-S 72334-S 72340-S	72323-S 72329-S 72335-S 72341-S	72324-S 72330-S 72336-S 72342-S	72325-S 72331-S 72337-S 72343-S	71927-S 71928-S 71929-S 71930-S	72326-S 72332-S 72338-S 72344-S
	2 1/2													
	2 3/4													
	3													

NOTES: For General Specifications see Page J-950.01. For Finishes see Section "Z" Addendum.
Dimension "B" to be measured with ring gages.

FORD MOTOR COMPANY
STANDARD PARTS

GROOVED PINS — TYPE B

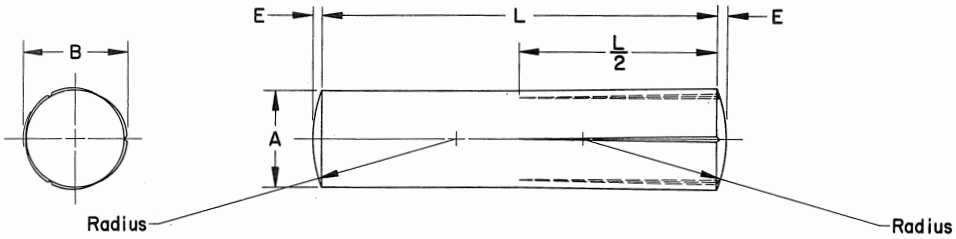

	Pin Size	1/16	5/64	3/32	7/64	1/8	5/32	3/16	7/32	1/4	5/16	3/8	7/16	1/2
A	Diameter	.0625 .0615	.0781 .0771	.0938 .0928	.1094 .1084	.1250 .1230	.1563 .1543	.1875 .1855	.2188 .2168	.2500 .2480	.3125 .3105	.3750 .3730	.4375 .4355	.5000 .4980
E	Crown Height	.0115 .0015	.0137 .0037	.0141 .0041	.0160 .0060	.0180 .0080	.0220 .0120	.0230 .0130	.0270 .0170	.0310 .0210	.0390 .0290	.0440 .0340	.0520 .0420	.0570 .0470
	Recommended Hole Size	.0640 .0625	.0798 .0781	.0956 .0938	.1113 .1094	.1271 .1250	.1587 .1563	.1903 .1875	.2219 .2188	.2534 .2500	.3166 .3125	.3797 .3750	.4428 .4375	.5040 .5000
B	Expanded Diameter	.069 .067	.085 .083	.102 .100	.118 .116	.136 .132	.168 .164	.200 .196	.232 .228	.265 .261	.331 .327	.396 .392	.461 .457	.527 .523
	MATERIAL	M-3422-A Steel					FORD PART NUMBERS							
L	1/4 3/8 1/2 5/8	71612-S 71617-S 71624-S 71633-S	71613-S 71618-S 71625-S 71634-S	71614-S 71619-S 71626-S 71635-S	71615-S 71620-S 71627-S 71636-S	71616-S 71621-S 71628-S 71637-S	71622-S 71629-S 71638-S	71623-S 71630-S 71639-S	71631-S 71640-S	71632-S 71641-S	71642-S			
LENGTH	3/4 7/8 1 1 1/4		71643-S	71644-S 71653-S	71645-S 71654-S 71663-S	71646-S 71655-S 71664-S 71673-S	71647-S 71656-S 71665-S 71674-S	71648-S 71657-S 71666-S 71675-S	71649-S 71658-S 71667-S 71676-S	71650-S 71659-S 71668-S 71677-S	71651-S 71660-S 71669-S 71678-S	71652-S 71661-S 71670-S 71679-S	71662-S 71671-S 71680-S	71672-S 71681-S
	1 1/2 1 3/4 2 2 1/4						71682-S	71683-S 71690-S 71697-S	71684-S 71691-S 71698-S	71685-S 71692-S 71699-S 71704-S	71686-S 71693-S 71700-S 71705-S	71687-S 71694-S 71701-S 71706-S	71688-S 71695-S 71702-S 71707-S	71689-S 71696-S 71703-S 71708-S
	2 1/2 2 3/4 3										71709-S	71710-S 71713-S	71711-S 71714-S 71716-S	71712-S 71715-S 71718-S

NOTES: For General Specifications see Page J-950.01. For Finishes see Section "Z" Addendum.
Dimension "B" to be measured with ring gages.

FORD MOTOR COMPANY
STANDARD PARTS

GROOVED PINS — TYPE C

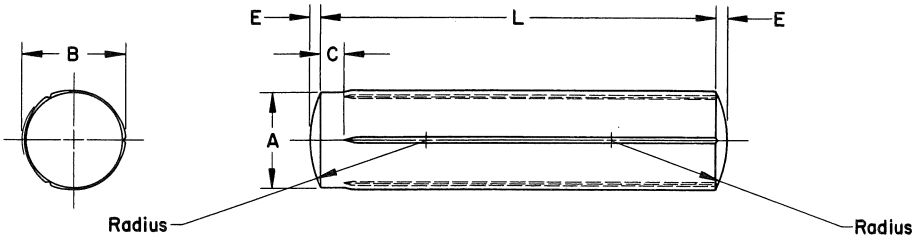

	Pin Size	1/16	5/64	3/32	7/64	1/8	5/32	3/16	7/32	1/4	5/16	3/8	7/16	1/2
A	Diameter	.0625 .0615	.0781 .0771	.0938 .0928	.1094 .1084	.1250 .1230	.1563 .1543	.1875 .1855	.2188 .2168	.2500 .2480	.3125 .3105	.3750 .3730	.4375 .4355	.5000 .4980
E	Crown Height	.0115 .0015	.0137 .0037	.0141 .0041	.0160 .0060	.0180 .0080	.0220 .0120	.0230 .0130	.0270 .0170	.0310 .0210	.0390 .0290	.0440 .0340	.0520 .0420	.0570 .0470
C	Pilot Length	.031	.031	.031	.031	.031	.062	.062	.062	.062	.094	.094	.094	.094
	Recommended Hole Size	.0640 .0625	.0798 .0781	.0956 .0938	.1113 .1094	.1271 .1250	.1587 .1563	.1903 .1875	.2219 .2188	.2534 .2500	.3166 .3125	.3797 .3750	.4428 .4375	.5060 .5000
							B Expanded Diameter							
L	1/4	.069 .067	.085 .083	.102 .100	.118 .116	.136 .132								
	3/8	.069 .067	.085 .083	.102 .100	.118 .116	.136 .132	.168 .164	.200 .196						
	1/2	.069 .067	.085 .083	.102 .100	.118 .116	.136 .132	.168 .164	.200 .196	.232 .228	.265 .261				
	5/8	.069 .067	.085 .083	.102 .100	.118 .116	.136 .132	.168 .164	.200 .196	.232 .228	.265 .261	.331 .327			
	3/4		.085 .083	.102 .100	.117 .115	.136 .132	.168 .164	.200 .196	.232 .228	.265 .261	.331 .327	.396 .392		
L	7/8			.102 .100	.117 .115	.135 .131	.167 .163	.200 .196	.232 .228	.265 .261	.331 .327	.396 .392	.461 .457	
E	1				.116 .114	.135 .131	.167 .163	.200 .196	.232 .228	.265 .261	.331 .327	.396 .392	.461 .457	.527 .523
N	1 1/4					.134 .130	.166 .162	.199 .195	.232 .228	.265 .261	.331 .327	.396 .392	.461 .457	.527 .523
G	1 1/2						.166 .162	.199 .195	.231 .227	.264 .260	.331 .327	.396 .392	.461 .457	.527 .523
T	1 3/4							.199 .195	.231 .227	.264 .260	.330 .326	.395 .391	.461 .457	.527 .523
H	2							.198 .194	.231 .227	.264 .260	.330 .326	.395 .391	.460 .456	.527 .523
	2 1/4									.264 .260	.330 .326	.395 .391	.460 .456	.526 .522
	2 1/2										.329 .325	.395 .391	.460 .456	.526 .522
	2 3/4											.395 .391	.460 .456	.526 .522
	3												.459 .455	.525 .521
	MATERIAL	M-3422-A Steel					FORD PART NUMBERS							
L	1/4	71400-S 71405-S 71412-S 71421-S	71401-S 71406-S 71413-S 71422-S	71402-S 71407-S 71414-S 71423-S	71403-S 71408-S 71415-S 71424-S	71404-S 71409-S 71416-S 71425-S	71410-S 71417-S 71426-S	71411-S 71418-S 71427-S	71419-S 71428-S	71420-S 71429-S	71430-S			
	3/8													
	1/2													
	5/8													
	3/4		71431-S	71432-S 71441-S	71433-S 71442-S 71451-S	71434-S 71443-S 71452-S 71461-S	71435-S 71444-S 71453-S 71462-S	71436-S 71445-S 71454-S 71463-S	71437-S 71446-S 71455-S 71464-S	71438-S 71447-S 71456-S 71465-S	71439-S 71448-S 71457-S 71466-S	71440-S 71449-S 71458-S 71467-S	71450-S 71459-S 71468-S	71460-S 71469-S
L	7/8													
E	1													
N	1 1/4													
G	1 1/2						71470-S	71471-S 71478-S 71485-S	71472-S 71479-S 71486-S	71473-S 71480-S 71487-S 71492-S	71474-S 71481-S 71488-S 71493-S	71475-S 71482-S 71489-S 71494-S	71476-S 71483-S 71490-S 71495-S	71477-S 71484-S 71491-S 71496-S
T	1 3/4													
H	2													
	2 1/4													
	2 1/2										71497-S	71498-S 71501-S	71499-S 71502-S 71504-S	71500-S 71503-S 71505-S
	2 3/4													
	3													

NOTES: For General Specifications see Page J-950.01. For Finishes see Section "Z" Addendum.
Dimension "B" to be measured with ring gages.

FORD MOTOR COMPANY
STANDARD PARTS

GROOVED PINS — TYPE D

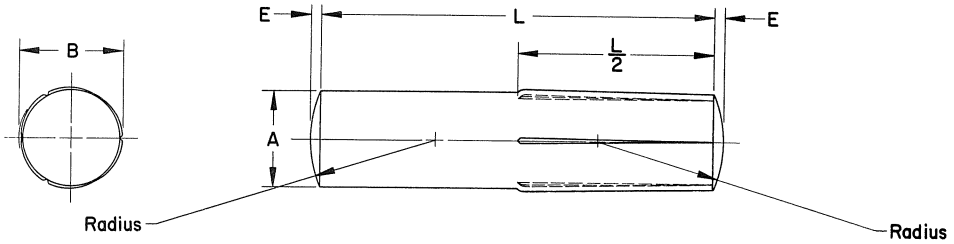

	Pin Size	1/16	5/64	3/32	7/64	1/8	5/32	3/16	7/32	1/4	5/16	3/8	7/16	1/2
A	Diameter	.0625 .0615	.0781 .0771	.0938 .0928	.1094 .1084	.1250 .1230	.1563 .1543	.1875 .1855	.2188 .2168	.2500 .2480	.3125 .3105	.3750 .3730	.4375 .4355	.5000 .4980
E	Crown Height	.0115 .0015	.0137 .0037	.0141 .0041	.0160 .0060	.0180 .0080	.0220 .0120	.0230 .0130	.0270 .0170	.0310 .0210	.0390 .0290	.0440 .0340	.0520 .0420	.0570 .0470
	Recommended Hole Size	.0640 .0625	.0798 .0781	.0956 .0938	.1113 .1094	.1271 .1250	.1587 .1563	.1903 .1875	.2219 .2188	.2534 .2500	.3166 .3125	.3797 .3750	.4428 .4375	.5040 .5000
B	Expanded Diameter	.069 .067	.085 .083	.102 .100	.118 .116	.136 .132	.168 .164	.200 .196	.232 .228	.265 .261	.331 .327	.396 .392	.461 .457	.527 .523
	MATERIAL	M-3422-A Steel						FORD PART NUMBERS						
L	1/4 3/8 1/2 5/8	71200-S 71205-S 71212-S 71221-S	71201-S 71206-S 71213-S 71222-S	71202-S 71207-S 71214-S 71223-S	71203-S 71208-S 71215-S 71224-S	71204-S 71209-S 71216-S 71225-S	71210-S 71217-S 71226-S	71211-S 71218-S 71227-S	71219-S 71228-S	71220-S 71229-S	71230-S			
L	3/4 7/8 1 1 1/4		71231-S	71232-S 71241-S	71233-S 71242-S 71251-S	71234-S 71243-S 71252-S 71261-S	71235-S 71244-S 71253-S 71262-S	71236-S 71245-S 71254-S 71263-S	71237-S 71246-S 71255-S 71264-S	71238-S 71247-S 71256-S 71265-S	71239-S 71248-S 71257-S 71266-S	71240-S 71249-S 71258-S 71267-S	71250-S 71259-S 71268-S	71260-S 71269-S
L	1 1/2 1 3/4 2 2 1/4						71270-S	71271-S 71278-S 71285-S	71272-S 71279-S 71286-S	71273-S 71280-S 71287-S 71292-S	71274-S 71281-S 71288-S 71293-S	71275-S 71282-S 71289-S 71294-S	71276-S 71283-S 71290-S 71295-S	71277-S 71284-S 71291-S 71296-S
L	2 1/2 2 3/4 3										71297-S	71298-S 71301-S	71299-S 71302-S 71304-S	71300-S 71303-S 71305-S

NOTES: For General Specifications see Page J-950.01. For Finishes see Section "Z" Addendum.
Dimension "B" to be measured with ring gages.

FORD MOTOR COMPANY
STANDARD PARTS

GROOVED PINS — TYPE E

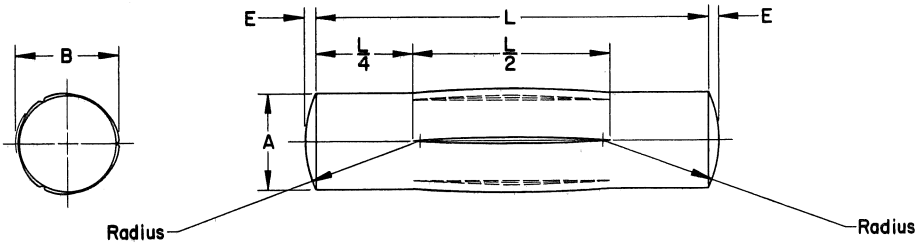

	Pin Size	1/16	5/64	3/32	7/64	1/8	5/32	3/16	7/32	1/4	5/16	3/8	7/16	1/2
A	Diameter	.0625 .0615	.0781 .0771	.0938 .0928	.1094 .1084	.1250 .1230	.1563 .1543	.1875 .1855	.2188 .2168	.2500 .2480	.3125 .3105	.3750 .3730	.4375 .4355	.5000 .4980
E	Crown Height	.0115 .0015	.0137 .0037	.0141 .0041	.0160 .0060	.0180 .0080	.0220 .0120	.0230 .0130	.0270 .0170	.0310 .0210	.0390 .0290	.0440 .0340	.0520 .0420	.0570 .0470
	Recommended Hole Size	.0640 .0625	.0798 .0781	.0956 .0938	.1113 .1094	.1271 .1250	.1587 .1563	.1903 .1875	.2219 .2188	.2534 .2500	.3166 .3125	.3797 .3750	.4428 .4375	.5040 .5000
B	Expanded Diameter	.069 .067	.085 .083	.102 .100	.118 .116	.136 .132	.164 .168	.196 .200	.232 .228	.265 .261	.331 .327	.396 .392	.461 .457	.527 .523
	MATERIAL	M-3422-A Steel					FORD PART NUMBERS							
LENGTH	1/4 3/8 1/2 5/8	71719-S 71724-S 71731-S 71740-S	71720-S 71725-S 71732-S 71741-S	71721-S 71726-S 71733-S 71742-S	71722-S 71727-S 71734-S 71743-S	71723-S 71728-S 71735-S 71744-S	71729-S 71736-S 71745-S	71730-S 71737-S 71746-S	71738-S 71747-S	71739-S 71748-S	71749-S			
	3/4 7/8 1 1 1/4		71750-S	71751-S 71760-S	71752-S 71761-S 71770-S	71753-S 71762-S 71771-S 71780-S	71754-S 71763-S 71772-S 71781-S	71755-S 71764-S 71773-S 71782-S	71756-S 71765-S 71774-S 71783-S	71757-S 71766-S 71775-S 71784-S	71758-S 71767-S 71776-S 71785-S	71759-S 71768-S 71777-S 71786-S	71769-S 71778-S 71787-S	71779-S 71788-S
	1 1/2 1 3/4 2 2 1/4						71789-S	71790-S 71797-S 71804-S	71791-S 71798-S 71805-S	71792-S 71799-S 71806-S 71811-S	71793-S 71800-S 71807-S 71812-S	71794-S 71801-S 71808-S 71813-S	71795-S 71802-S 71809-S 71814-S	71796-S 71803-S 71810-S 71815-S
	2 1/2 2 3/4 3										71816-S	71817-S 71820-S	71818-S 71821-S 71823-S	71819-S 71822-S 71824-S

NOTES: For General Specifications see Page J-950.01. For Finishes see Section "Z" Addendum.
Dimension "B" to be measured with ring gages.

FORD MOTOR COMPANY
STANDARD PARTS

GROOVED PINS — TYPE F

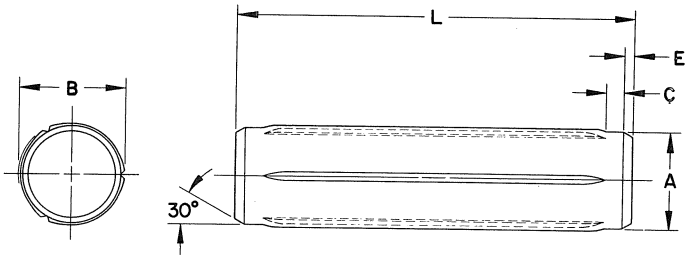

	Pin Size	1/16	5/64	3/32	7/64	1/8	5/32	3/16	7/32	1/4	5/16	3/8	7/16	1/2
A	Diameter	.0625 .0615	.0781 .0771	.0938 .0928	.1094 .1084	.1250 .1230	.1563 .1543	.1875 .1855	.2188 .2168	.2500 .2480	.3125 .3105	.3750 .3730	.4375 .4355	.5000 .4980
E	Chamfer Length	.016	.016	.016	.016	.016	.031	.031	.031	.031	.047	.047	.047	.047
C	Pilot Length	.031	.031	.031	.031	.031	.062	.062	.062	.062	.094	.094	.094	.094
	Recommended Hole Size	.0640 .0625	.0798 .0781	.0956 .0938	.1113 .1094	.1271 .1250	.1587 .1563	.1903 .1875	.2219 .2188	.2534 .2500	.3166 .3125	.3797 .3750	.4428 .4375	.5060 .5000
		B Expanded Diameter												
L	1/4	.069 .067	.085 .083	.102 .100	.118 .116	.136 .132								
	3/8	.069 .067	.085 .083	.102 .100	.118 .116	.136 .132	.168 .164	.200 .196						
	1/2	.069 .067	.085 .083	.102 .100	.118 .116	.136 .132	.168 .164	.200 .196	.232 .228	.265 .261				
	5/8	.069 .067	.085 .083	.102 .100	.118 .116	.136 .132	.168 .164	.200 .196	.232 .228	.265 .261	.331 .327			
	3/4		.085 .083	.102 .100	.117 .115	.136 .132	.168 .164	.200 .196	.232 .228	.265 .261	.331 .327	.396 .392		
L	7/8			.102 .100	.117 .115	.135 .131	.167 .163	.200 .196	.232 .228	.265 .261	.331 .327	.396 .392	.461 .457	
E	1				.116 .114	.135 .131	.167 .163	.200 .196	.232 .228	.265 .261	.331 .327	.396 .392	.461 .457	.527 .523
N	1 1/4					.134 .130	.166 .162	.199 .195	.232 .228	.265 .261	.331 .327	.396 .392	.461 .457	.527 .523
G	1 1/2						.166 .162	.199 .195	.231 .227	.264 .260	.331 .327	.396 .392	.461 .457	.527 .523
T	1 3/4							.199 .195	.231 .227	.264 .260	.330 .326	.395 .391	.461 .457	.527 .523
H	2							.198 .194	.231 .227	.264 .260	.330 .326	.395 .391	.460 .456	.527 .523
	2 1/4									.264 .260	.330 .326	.395 .391	.460 .456	.526 .522
	2 1/2										.329 .325	.395 .391	.460 .456	.526 .522
	2 3/4											.395 .391	.460 .456	.526 .522
	3												.459 .455	.525 .521
	MATERIAL	M-3422-A Steel					FORD PART NUMBERS							
L	1/4 3/8 1/2 5/8	71506-S 71511-S 71518-S 71527-S	71507-S 71512-S 71519-S 71528-S	71508-S 71513-S 71520-S 71529-S	71509-S 71514-S 71521-S 71530-S	71510-S 71515-S 71522-S 71531-S	71516-S 71523-S 71532-S	71517-S 71524-S 71533-S	71525-S 71534-S	71526-S 71535-S	71536-S			
L	3/4 7/8 1 1 1/4		71537-S	71538-S 71547-S	71539-S 71548-S 71557-S	71540-S 71549-S 71558-S 71567-S	71541-S 71550-S 71559-S 71568-S	71542-S 71551-S 71560-S 71569-S	71543-S 71552-S 71561-S 71570-S	71544-S 71553-S 71562-S 71571-S	71545-S 71554-S 71563-S 71572-S	71546-S 71555-S 71564-S 71573-S	71556-S 71565-S 71574-S	71566-S 71575-S
E	1 1/2 1 3/4 2 2 1/4						71576-S	71577-S 71584-S 71591-S	71578-S 71585-S 71592-S	71579-S 71586-S 71593-S 71598-S	71580-S 71587-S 71594-S 71599-S	71581-S 71588-S 71595-S 71600-S	71582-S 71589-S 71596-S 71601-S	71583-S 71590-S 71597-S 71602-S
N G T H	2 1/2 2 3/4 3										71603-S	71604-S 71607-S	71605-S 71608-S 71610-S	71606-S 71609-S 71611-S

NOTES: For General Specifications see Page J-950.01. For Finishes see Section "Z" Addendum.
Dimension "B" to be measured with ring gages.

FORD MOTOR COMPANY
STANDARD PARTS

TAPER PINS — COMMERCIAL TYPE

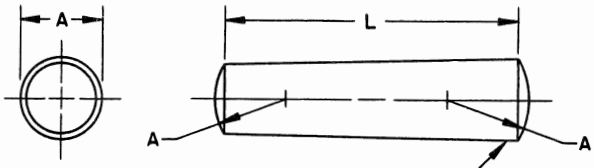

TAPER .25 PER FOOT OR .0208
PER INCH INCLUDED ANGLE

	Number of Pin	00000	0000	000	00	0	1	2
A	Diameter - Large End	.0953 .0933	.1103 .1083	.1263 .1243	.1423 .1403	.1573 .1553	.1733 .1713	.1943 .1923
	MATERIAL:	Steel - M-3422-A			FORD PART NUMBERS			
L	* 3/8 7/16 *1/2	73625-S 73630-S 73637-S	73626-S 73631-S 73638-S	73627-S 73632-S 73639-S	73628-S 73633-S 73640-S	73629-S 73634-S 73641-S	73635-S 73642-S	73636-S 73643-S
	9/16 *5/8 11/16 *3/4	73646-S 73657-S 73670-S 73683-S	73647-S 73658-S 73671-S 73684-S	73648-S 73659-S 73672-S 73685-S	73649-S 73660-S 73673-S 73686-S	73650-S 73661-S 73674-S 73687-S	73651-S 73662-S 73675-S 73688-S	73652-S 73663-S 73676-S 73689-S
LENGTH	13/16 *7/8 15/16 *1	73696-S 73709-S	73697-S 73710-S	73698-S 73711-S 73722-S 73733-S	73699-S 73712-S 73723-S 73734-S	73700-S 73713-S 73724-S 73735-S	73701-S 73714-S 73725-S 73736-S	73702-S 73715-S 73726-S 73737-S
	1 1/8 *1 1/4 1 3/8 *1 1/2			73744-S 73755-S	73745-S 73756-S	73746-S 73757-S 73766-S 73775-S	73747-S 73758-S 73767-S 73776-S	73748-S 73759-S 73768-S 73777-S
	1 5/8 1 3/4 1 7/8 2					73784-S 73793-S	73785-S 73794-S	73786-S 73795-S 73802-S 73809-S
	2 1/4 2 1/2							73816-S 73823-S

	Number of Pin	3	4	5	6	7	8	
A	Diameter - Large End	.2203 .2183	.2513 .2493	.2903 .2883	.3423 .3403	.4103 .4083	.4933 .4913	
	MATERIAL:	Steel - M-3422-A			FORD PART NUMBERS			
L	*1/2	73644-S	73645-S					
	9/16 *5/8 11/16 *3/4	73653-S 73664-S 73677-S 73690-S	73654-S 73665-S 73678-S 73691-S	73655-S 73666-S 73679-S 73692-S	73656-S 73667-S 73680-S 73693-S	73668-S 73681-S 73694-S	73669-S 73682-S 73695-S	
LENGTH	13/16 *7/8 15/16 *1	73703-S 73716-S 73727-S 73738-S	73704-S 73717-S 73728-S 73739-S	73705-S 73718-S 73729-S 73740-S	73706-S 73719-S 73730-S 73741-S	73707-S 73720-S 73731-S 73742-S	73708-S 73721-S 73732-S 73743-S	
	1 1/8 *1 1/4 1 3/8 *1 1/2	73749-S 73760-S 73769-S 73778-S	73750-S 73761-S 73770-S 73779-S	73751-S 73762-S 73771-S 73780-S	73752-S 73763-S 73772-S 73781-S	73753-S 73764-S 73773-S 73782-S	73754-S 73765-S 73774-S 73783-S	
	1 5/8 *1 3/4 1 7/8 *2	73787-S 73796-S 73803-S 73810-S	73788-S 73797-S 73804-S 73811-S	73789-S 73798-S 73805-S 73812-S	73790-S 73799-S 73806-S 73813-S	73791-S 73800-S 73807-S 73814-S	73792-S 73801-S 73808-S 73815-S	
	2 1/4 2 1/2 2 3/4 3	73817-S 73824-S 73830-S 73836-S	73818-S 73825-S 73831-S 73837-S	73819-S 73826-S 73832-S 73838-S	73820-S 73827-S 73833-S 73839-S	73821-S 73828-S 73834-S 73840-S	73822-S 73829-S 73835-S 73841-S	

NOTES: For General Specifications see Page J-950.01. For Finishes see Section "Z" Addendum.
*Standard reamers are available in lengths indicated by asterisk above the line.

FORD MOTOR COMPANY
STANDARD PARTS

CLEVIS PINS

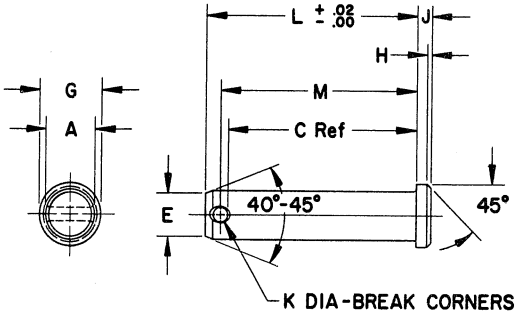

	PIN SIZE		3/16	1/4	5/16		3/8		7/16		1/2	9/16	5/8
A	Body Diameter		.186 .181	.248 .243	.311 .306		.373 .368		.436 .431		.496 .491	.559 .555	.621 .616
G	Head Diameter		.312	.375	.438		.500		.562		.625	.688	.812
J	Head Height		.062	.094	.094		.125		.156		.156	.156	.203
H	Head Chamfer		.016	.031	.031		.031		.047		.047	.047	.062
E	Chamfer Diameter		.152 .147	.214 .209	.265 .259		.327 .321		.390 .384		.439 .431	.502 .494	.564 .556
	Material		Steel - AISI C-1013 or Equivalent, Min "C", Min "L" and Ford Part Numbers										
K	Hole Diameter		.088 .073	.088 .073	.119 .104	.151 .136	.119 .104	.151 .136	.119 .104	.151 .136	.151 .136	.151 .136	.151 .136
M DISTANCE TO CENTER OF HOLE	.375-.395	C L PN	.331 15/32 76107-S	.331 15/32 76108-S	.315 1/2 76000-S	.300 33/64 73852-S	.315 1/2 76018-S	.300 33/64 73853-S					
	.406-.416	C L PN	.362 1/2 73850-S	.362 1/2 73851-S	.347 17/32 76109-S	.331 35/64 76110-S	.347 17/32 76111-S	.331 35/64 76112-S					
	.438-.458	C L PN	.393 17/32 76113-S	.393 17/32 76114-S	.378 9/16 76001-S	.362 37/64 73856-S	.378 9/16 76019-S	.362 37/64 73857-S	.378 9/16 76115-S	.362 37/64 76116-S			
	.469-.489	C L PN	.425 9/16 73854-S	.425 9/16 73855-S	.409 19/32 76117-S	.393 39/64 76118-S	.409 19/32 76119-S	.393 39/64 76120-S	.409 19/32 76035-S	.393 39/64 73863-S			
	.484-.504	C L PN	.440 37/64 73858-S*										
	.500-.520	C L PN	.456 19/32 76121-S	.456 19/32 76122-S	.440 5/8 76002-S	.425 41/64 73861-S	.440 5/8 76020-S	.425 41/64 73862-S	.440 5/8 76123-S	.425 41/64 76124-S	.425 21/32 76125-S		
	.531-.551	C L PN	.487 5/8 73859-S	.487 5/8 73860-S	.472 21/32 76126-S	.456 43/64 76127-S	.472 21/32 76128-S	.456 43/64 76129-S	.472 21/32 76036-S	.456 43/64 73868-S	.456 11/16 76130-S		
	.562-.582	C L PN	.518 21/32 76131-S	.518 21/32 76132-S	.503 11/16 76003-S	.487 45/64 73866-S	.503 11/16 76021-S	.487 45/64 73867-S	.503 11/16 76133-S	.487 45/64 76134-S	.487 23/32 76135-S	.487 23/32 76136-S	.487 23/32 73876-S
	.594-.614	C L PN	.550 11/16 73864-S	.550 11/16 73865-S	.534 23/32 76137-S	.518 47/64 76138-S	.534 23/32 76139-S	.518 47/64 76140-S	.534 23/32 76037-S	.518 47/64 73873-S	.518 3/4 73874-S	.518 3/4 73875-S	.518 3/4 76141-S
	.625-.645	C L PN	.581 23/32 76142-S	.581 23/32 76143-S	.565 3/4 76004-S	.550 49/64 73871-S	.565 3/4 76022-S	.550 49/64 73872-S	.565 3/4 76144-S	.550 49/64 76145-S	.550 25/32 76146-S	.550 25/32 76147-S	.550 25/32 73885-S
	.656-.676	C L PN	.612 3/4 73869-S	.612 3/4 73870-S	.597 25/32 76148-S	.581 51/64 76149-S	.597 25/32 76150-S	.581 51/64 76151-S	.597 25/32 76038-S	.581 51/64 73882-S	.581 13/16 73883-S	.581 13/16 73884-S	.581 13/16 76152-S
	.672-.692	C L PN		.628 49/64 73877-S*									
	.688-.708	C L PN	.643 25/32 76153-S	.643 25/32 76154-S	.628 13/16 76005-S	.612 53/64 73880-S	.628 13/16 76023-S	.612 53/64 73881-S	.628 13/16 76155-S	.612 53/64 76156-S	.612 27/32 76157-S	.612 27/32 76158-S	.612 27/32 73893-S
	.719-.739	C L PN	.675 13/16 73878-S	.675 13/16 73879-S	.659 27/32 76159-S	.643 55/64 76160-S	.659 27/32 76161-S	.643 55/64 76162-S	.659 27/32 76039-S	.643 55/64 73890-S	.643 7/8 73891-S	.643 7/8 73892-S	.643 7/8 76163-S
	.750-.770	C L PN	.706 27/32 76164-S	.706 27/32 76165-S	.690 7/8 76006-S	.675 57/64 73888-S	.690 7/8 76024-S	.675 57/64 73889-S	.690 7/8 76166-S	.675 57/64 76167-S	.675 29/32 76168-S	.675 29/32 76169-S	.675 29/32 73901-S
	.781-.801	C L PN	.737 7/8 73886-S	.737 7/8 73887-S	.722 29/32 76170-S	.706 59/64 76171-S	.722 29/32 76172-S	.706 59/64 76173-S	.722 29/32 76040-S	.706 59/64 73898-S	.706 15/16 73899-S	.706 15/16 73900-S	.706 15/16 76174-S

See General Specifications, J-950.01.
*For use with SAE clevises.

Recommended Finish, S8; see Section "Z" Addendum.
Case harden to depth of .010-.005; surface, file hard.

FORD MOTOR COMPANY
STANDARD PARTS

CLEVIS PINS

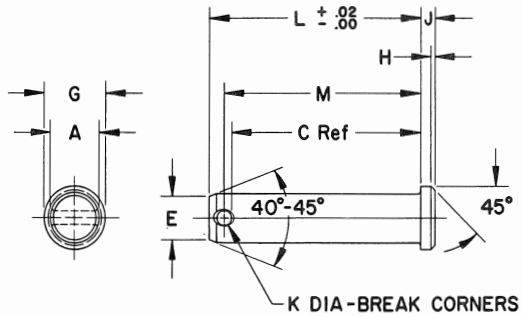

	PIN SIZE		3/16	1/4	5/16		3/8		7/16		1/2	9/16	5/8
A	Body Diameter		.186 .181	.248 .243	.311 .306		.373 .368		.436 .431		.496 .491	.559 .555	.621 .616
G	Head Diameter		.312	.375	.438		.500		.562		.625	.688	.812
J	Head Height		.062	.094	.094		.125		.156		.156	.156	.203
H	Head Chamfer		.016	.031	.031		.031		.047		.047	.047	.062
E	Chamfer Diameter		.152 .147	.214 .209	.265 .259		.327 .321		.390 .384		.439 .431	.502 .494	.564 .556
	Material		Steel - AISI C-1013 or Equivalent, Min "C", Min "L" and Ford Part Numbers										
K	Hole Diameter		.088 .073	.088 .073	.119 .104	.151 .136	.119 .104	.151 .136	.119 .104	.151 .136	.151 .136	.151 .136	.151 .136
M DISTANCE TO CENTER OF HOLE	.812-.832	C L PN	.768 29/32 76175-S	.768 29/32 76176-S	.753 15/16 76007-S*	.737 61/64 73896-S	.753 15/16 76025-S	.737 61/64 73897-S	.753 15/16 76177-S	.737 61/64 76178-S	.737 31/32 76179-S	.737 31/32 76180-S	.737 31/32 73909-S
	.828-.848	C L PN				.753 31/32 76181-S*							
	.836-.856	C L PN				.760 63/64 73931-S							
	.844-.864	C L PN	.800 15/16 73894-S	.800 15/16 73895-S	.784 31/32 76182-S	.768 63/64 76183-S	.784 31/32 76184-S	.768 63/64 76185-S	.784 31/32 76041-S	.768 63/64 73906-S	.768 1- 73907-S	.768 1- 73908-S	.768 1- 76186-S
	.875-.895	C L PN	.831 31/32 76187-S	.831 31/32 76188-S	.815 1- 76009-S	.800 1-1/64 73904-S	.815 1- 76026-S	.800 1-1/64 73905-S	.815 1- 76189-S	.800 1-1/64 76190-S	.800 1-1/32 76191-S	.800 1-1/32 76192-S	.800 1-1/32 73916-S
	.906-.926	C L PN	.862 1- 73902-S	.862 1- 73903-S	.847 1-1/32 76193-S	.831 1-3/64 76194-S	.847 1-1/32 76195-S	.831 1-3/64 76196-S	.847 1-1/32 76042-S	.831 1-3/64 73913-S	.831 1-1/16 73914-S	.831 1-1/16 73915-S	.831 1-1/16 76197-S
	.938-.958	C L PN	.893 1-1/32 76198-S	.893 1-1/32 76199-S	.878 1-1/16 76010-S	.862 1-5/64 73911-S	.878 1-1/16 76028-S*	.862 1-5/64 73912-S	.878 1-1/16 76200-S	.862 1-5/64 76201-S	.862 1-3/32 76202-S	.862 1-3/32 76203-S	.862 1-3/32 73923-S
	.953-.973	C L PN						.878 1-3/32 76204-S*					
	.969-.989	C L PN	.925 1-1/16 76205-S	.925 1-1/16 73910-S	.909 1-3/32 76206-S	.893 1-7/64 76207-S	.909 1-3/32 76208-S	.893 1-7/64 76209-S	.909 1-3/32 76043-S	.893 1-7/64 73920-S	.893 1-1/8 73921-S	.893 1-1/8 73922-S	.893 1-1/8 76210-S
	1.000-1.020	C L PN	.956 1-3/32 76211-S	.956 1-3/32 76212-S	.940 1-1/8 76011-S	.925 1-9/64 73918-S	.940 1-1/8 76213-S	.925 1-9/64 73919-S	.940 1-1/8 76214-S	.925 1-9/64 76215-S	.925 1-5/32 76216-S	.925 1-5/32 76217-S	.925 1-5/32 73930-S
	1.031-1.051	C L PN	.987 1-1/8 76218-S	.987 1-1/8 73917-S	.972 1-5/32 76219-S	.956 1-11/64 76220-S	.972 1-5/32 76221-S	.956 1-11/64 76222-S	.972 1-5/32 76044-S	.956 1-11/64 73927-S	.956 1-3/16 73928-S	.956 1-3/16 73929-S	.956 1-3/16 76223-S
	1.062-1.082	C L PN	1.018 1-5/32 76224-S	1.018 1-5/32 76225-S	1.003 1-3/16 76012-S	.987 1-13/64 73925-S	1.003 1-3/16 76029-S	.987 1-13/64 73926-S	1.003 1-3/16 76045-S*	.987 1-13/64 76226-S	.987 1-7/32 76227-S	.987 1-7/32 76228-S	.987 1-7/32 73938-S
	1.078-1.098	C L PN								1.003 1-7/32 76229-S*			
	1.094-1.114	C L PN	1.050 1-3/16 76230-S	1.050 1-3/16 73924-S	1.034 1-7/32 76231-S	1.018 1-15/64 76232-S	1.034 1-7/32 76233-S	1.018 1-15/64 76234-S	1.034 1-7/32 76235-S	1.018 1-15/64 73935-S	1.018 1-1/4 73936-S	1.018 1-1/4 73937-S	1.018 1-1/4 76236-S
	1.125-1.145	C L PN	1.081 1-7/32 76237-S	1.081 1-7/32 76238-S	1.065 1-1/4 76013-S	1.050 1-17/64 73933-S	1.065 1-1/4 76030-S	1.050 1-17/64 73934-S	1.065 1-1/4 76239-S	1.050 1-17/64 76240-S	1.050 1-9/32 76241-S	1.050 1-9/32 76242-S	1.050 1-9/32 73945-S
	1.156-1.176	C L PN	1.112 1-1/4 76243-S	1.112 1-1/4 73932-S	1.097 1-9/32 76244-S	1.081 1-19/64 76245-S	1.097 1-9/32 76246-S	1.081 1-19/64 76247-S	1.097 1-9/32 76046-S	1.081 1-19/64 73942-S	1.081 1-5/16 73943-S	1.081 1-5/16 73944-S	1.081 1-5/16 76248-S

See General Specifications, J-950.01.
*For use with SAE clevises.

Recommended Finish, S8; see Section "Z" Addendum.
Case harden to depth of .010-.005; surface, file hard.

PRINTED IN U.S.A.

FORD MOTOR COMPANY
STANDARD PARTS

CLEVIS PINS

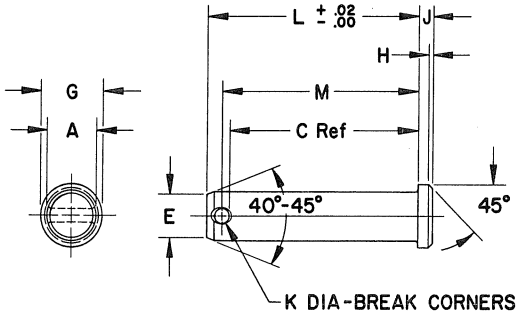

	PIN SIZE		3/16	1/4	5/16		3/8		7/16		1/2	9/16	5/8
A	Body Diameter		.186 .181	.248 .243	.311 .306		.373 .368		.436 .431		.496 .491	.559 .555	.621 .616
G	Head Diameter		.312	.375	.438		.500		.562		.625	.688	.812
J	Head Height		.062	.094	.094		.125		.156		.156	.156	.203
H	Head Chamfer		.016	.031	.031		.031		.047		.047	.047	.062
E	Chamfer Diameter		.152 .147	.214 .209	.265 .259		.327 .321		.390 .384		.439 .431	.502 .494	.564 .556
	Material		Steel - AISI C-1013 or Equivalent, Min "C", Min "L" and Ford Part Numbers										
K	Hole Diameter		.088 .073	.088 .073	.119 .104	.151 .136	.119 .104	.151 .136	.119 .104	.151 .136	.151 .136	.151 .136	.151 .136
M DISTANCE TO CENTER OF HOLE	1.188-1.208	C L PN	1.143 1-9/32 76249-S	1.143 1-9/32 76250-S	1.128 1-5/16 76014-S	1.112 1-21/64 73940-S	1.128 1-5/16 76031-S	1.112 1-21/64 73941-S	1.128 1-5/16 76251-S	1.112 1-21/64 76252-S	1.112 1-11/32 76253-S	1.112 1-11/32 76254-S	1.112 1-11/32 73953-S
	1.203-1.223	C L PN									1.128 1-23/64 73958-S*		
	1.219-1.239	C L PN	1.175 1-5/16 76255-S	1.175 1-5/16 73939-S	1.159 1-11/32 76256-S	1.143 1-23/64 76257-S	1.159 1-11/32 76258-S	1.143 1-23/64 76259-S	1.159 1-11/32 76047-S	1.143 1-23/64 73950-S	1.143 1-3/8 73951-S	1.143 1-3/8 73952-S	1.143 1-3/8 76260-S
	1.250-1.270	C L PN	1.206 1-11/32 76261-S	1.206 1-11/32 76262-S	1.190 1-3/8 76015-S	1.175 1-25/64 73948-S	1.190 1-3/8 76032-S	1.175 1-25/64 73949-S	1.190 1-3/8 76263-S	1.175 1-25/64 76264-S	1.175 1-13/32 76265-S	1.175 1-13/32 76266-S	1.175 1-13/32 73960-S
	1.281-1.301	C L PN	1.237 1-3/8 76267-S	1.237 1-3/8 73947-S	1.222 1-13/32 76268-S	1.206 1-27/64 76269-S	1.222 1-13/32 76270-S	1.206 1-27/64 76271-S	1.222 1-13/32 76048-S	1.206 1-27/64 73957-S	1.206 1-7/16 76272-S	1.206 1-7/16 73959-S	1.206 1-7/16 76273-S
	1.312-1.332	C L PN	1.268 1-13/32 76274-S	1.268 1-13/32 76275-S	1.253 1-7/16 76016-S	1.237 1-29/64 73955-S	1.253 1-7/16 76033-S	1.237 1-29/64 73956-S	1.253 1-7/16 76276-S	1.237 1-29/64 76277-S	1.237 1-15/32 76278-S	1.237 1-15/32 76279-S	1.237 1-15/32 73968-S
	1.344-1.364	C L PN	1.300 1-7/16 76280-S	1.300 1-7/16 73954-S	1.284 1-15/32 76281-S	1.268 1-31/64 76282-S	1.284 1-15/32 76283-S	1.268 1-31/64 76284-S	1.284 1-15/32 76049-S	1.268 1-31/64 73965-S	1.268 1-1/2 73966-S	1.268 1-1/2 73967-S	1.268 1-1/2 76285-S
	1.375-1.395	C L PN	1.331 1-15/32 76286-S	1.331 1-15/32 76287-S	1.315 1-1/2 76017-S	1.300 1-33/64 73963-S	1.315 1-1/2 76034-S	1.300 1-33/64 73964-S	1.315 1-1/2 76288-S	1.300 1-33/64 76289-S	1.300 1-17/32 76290-S	1.300 1-17/32 76291-S	1.300 1-17/32 73975-S
	1.406-1.426	C L PN	1.362 1-1/2 76292-S	1.362 1-1/2 73962-S	1.347 1-17/32 76293-S	1.331 1-35/64 76294-S	1.347 1-17/32 76295-S	1.331 1-35/64 76296-S	1.347 1-17/32 76088-S	1.331 1-35/64 73972-S	1.331 1-9/16 73973-S	1.331 1-9/16 73974-S	1.331 1-9/16 76297-S
	1.438-1.458	C L PN	1.393 1-17/32 76298-S	1.393 1-17/32 76299-S	1.378 1-9/16 76051-S	1.362 1-37/64 73970-S	1.378 1-9/16 76069-S	1.362 1-37/64 73971-S	1.378 1-9/16 76300-S	1.362 1-37/64 76301-S	1.362 1-19/32 76302-S	1.362 1-19/32 76303-S	1.362 1-19/32 73982-S
	1.453-1.473	C L PN											1.378 1-39/64 76304-S*
	1.469-1.489	C L PN	1.425 1-9/16 76305-S	1.425 1-9/16 73969-S	1.409 1-19/32 76306-S	1.393 1-39/64 76307-S	1.409 1-19/32 76308-S	1.393 1-39/64 76309-S	1.409 1-19/32 76089-S	1.393 1-39/64 73979-S	1.393 1-5/8 73980-S	1.393 1-5/8 73981-S	1.393 1-5/8 73990-S
	1.500-1.520	C L PN	1.456 1-19/32 76310-S	1.456 1-19/32 76311-S	1.440 1-5/8 76052-S	1.425 1-41/64 73977-S	1.440 1-5/8 76070-S	1.425 1-41/64 73978-S	1.440 1-5/8 76312-S	1.425 1-41/64 76313-S	1.425 1-21/32 76314-S	1.425 1-21/32 76315-S	1.425 1-21/32 76316-S
	1.531-1.551	C L PN	1.487 1-5/8 76317-S	1.487 1-5/8 73976-S	1.472 1-21/32 76318-S	1.456 1-43/64 76319-S	1.472 1-21/32 76320-S	1.456 1-43/64 76321-S	1.472 1-21/32 76090-S	1.456 1-43/64 73987-S	1.456 1-11/16 73988-S	1.456 1-11/16 73989-S	1.456 1-11/16 76322-S
	1.562-1.582	C L PN	1.518 1-21/32 76323-S	1.518 1-21/32 76324-S	1.503 1-11/16 76053-S	1.487 1-45/64 73985-S	1.503 1-11/16 76071-S	1.487 1-45/64 73986-S	1.503 1-11/16 76325-S	1.487 1-45/64 76326-S	1.487 1-23/32 76327-S	1.487 1-23/32 76328-S	1.487 1-23/32 73997-S
	1.594-1.614	C L PN	1.550 1-11/16 76329-S	1.550 1-11/16 73984-S	1.534 1-23/32 76330-S	1.518 1-47/64 76331-S	1.534 1-23/32 76332-S	1.518 1-47/64 76333-S	1.534 1-23/32 76091-S	1.518 1-47/64 73994-S	1.518 1-3/4 73995-S	1.518 1-3/4 73996-S	1.518 1-3/4 76334-S

See General Specifications, J-950.01.
*For use with SAE clevises.

Recommended Finish, S8; see Section "Z" Addendum.
Case harden to depth of .010-.005; surface, file hard.

FORD MOTOR COMPANY
STANDARD PARTS

CLEVIS PINS

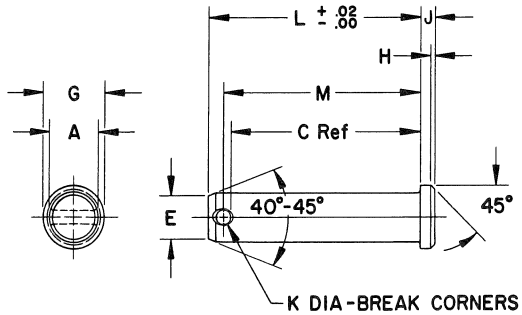

	PIN SIZE		3/16	1/4	5/16		3/8		7/16		1/2	9/16	5/8
A	Body Diameter		.186 .181	.248 .243	.311 .306		.373 .368		.436 .431		.496 .491	.559 .555	.621 .616
G	Head Diameter		.312	.375	.438		.500		.562		.625	.688	.812
J	Head Height		.062	.094	.094		.125		.156		.156	.156	.203
H	Head Chamfer		.016	.031	.031		.031		.047		.047	.047	.062
E	Chamfer Diameter		.152 .147	.214 .209	.265 .259		.327 .321		.390 .384		.439 .431	.502 .494	.564 .556
	Material		Steel - AISI C-1013 or Equivalent, Min "C", Min "L" and Ford Part Numbers										
K	Hole Diameter		.088 .073	.088 .073	.119 .104	.151 .136	.119 .104	.151 .136	.119 .104	.151 .136	.151 .136	.151 .136	.151 .136
M DISTANCE TO CENTER OF HOLE	1.625-1.645	C L PN	1.581 1-23/32 76335-S	1.581 1-23/32 76336-S	1.565 1-3/4 76054-S	1.550 1-49/64 73992-S	1.565 1-3/4 76072-S	1.550 1-49/64 73993-S	1.565 1-3/4 76337-S	1.550 1-49/64 76338-S	1.550 1-25/32 76339-S	1.550 1-25/32 76340-S	1.550 1-25/32 74004-S
	1.656-1.676	C L PN	1.612 1-3/4 76341-S	1.612 1-3/4 73991-S	1.597 1-25/32 76342-S	1.581 1-51/64 76343-S	1.597 1-25/32 76344-S	1.581 1-51/64 76345-S	1.597 1-25/32 76092-S	1.581 1-51/64 74001-S	1.581 1-13/16 74002-S	1.581 1-13/16 74003-S	1.581 1-13/16 76346-S
	1.688-1.708	C L PN	1.643 1-25/32 76347-S	1.643 1-25/32 76348-S	1.628 1-13/16 76055-S	1.612 1-53/64 73999-S	1.628 1-13/16 76073-S	1.612 1-53/64 74000-S	1.628 1-13/16 76349-S	1.612 1-53/64 76350-S	1.612 1-27/32 76351-S	1.612 1-27/32 76352-S	1.612 1-27/32 74011-S
	1.719-1.739	C L PN	1.675 1-13/16 76353-S	1.675 1-13/16 73998-S	1.659 1-27/32 76354-S	1.643 1-55/64 76355-S	1.659 1-27/32 76356-S	1.643 1-55/64 76357-S	1.659 1-27/32 76093-S	1.643 1-55/64 74008-S	1.643 1-7/8 74009-S	1.643 1-7/8 74010-S	1.643 1-7/8 76358-S
	1.750-1.770	C L PN	1.706 1-27/32 76359-S	1.706 1-27/32 76360-S	1.690 1-7/8 76056-S	1.675 1-57/64 74006-S	1.690 1-7/8 76074-S	1.675 1-57/64 74007-S	1.690 1-7/8 76361-S	1.675 1-57/64 76362-S	1.675 1-29/32 76363-S	1.675 1-29/32 76364-S	1.675 1-29/32 74018-S
	1.781-1.801	C L PN	1.737 1-7/8 76365-S	1.737 1-7/8 74005-S	1.722 1-29/32 76366-S	1.706 1-59/64 76367-S	1.722 1-29/32 76368-S	1.706 1-59/64 76369-S	1.722 1-29/32 76094-S	1.706 1-59/64 74015-S	1.706 1-15/16 74016-S	1.706 1-15/16 74017-S	1.706 1-15/16 76370-S
	1.812-1.832	C L PN	1.768 1-29/32 76371-S	1.768 1-29/32 76372-S	1.753 1-15/16 76057-S	1.737 1-61/64 74013-S	1.753 1-15/16 76075-S	1.737 1-61/64 74014-S	1.753 1-15/16 76373-S	1.737 1-61/64 76374-S	1.737 1-31/32 76375-S	1.737 1-31/32 76376-S	1.737 1-31/32 74025-S
	1.844-1.864	C L PN	1.800 1-15/16 76377-S	1.800 1-15/16 74012-S	1.784 1-31/32 76378-S	1.768 1-63/64 76379-S	1.784 1-31/32 76380-S	1.768 1-63/64 76381-S	1.784 1-31/32 76095-S	1.768 1-63/64 74022-S	1.768 2- 74023-S	1.768 2- 74024-S	1.768 2- 76382-S
	1.875-1.895	C L PN	1.831 1-31/32 76383-S	1.831 1-31/32 76384-S	1.815 2- 76058-S	1.800 2-1/64 74020-S	1.815 2- 76076-S	1.800 2-1/64 74021-S	1.815 2- 76385-S	1.800 2-1/64 76386-S	1.800 2-1/32 76387-S	1.800 2-1/32 76388-S	1.800 2-1/32 74032-S
	1.906-1.926	C L PN	1.862 2- 76389-S	1.862 2- 74019-S	1.847 2-1/32 76390-S	1.831 2-3/64 76391-S	1.847 2-1/32 76392-S	1.831 2-3/64 76393-S	1.847 2-1/32 76096-S	1.831 2-3/64 74029-S	1.831 2-1/16 74030-S	1.831 2-1/16 74031-S	1.831 2-1/16 76394-S
	1.938-1.958	C L PN	1.893 2-1/32 76395-S	1.893 2-1/32 76396-S	1.878 2-1/16 76059-S	1.862 2-5/64 74027-S	1.878 2-1/16 76077-S	1.862 2-5/64 74028-S	1.878 2-1/16 76397-S	1.862 2-5/64 76398-S	1.862 2-3/32 76399-S	1.862 2-3/32 76400-S	1.862 2-3/32 74039-S
	1.969-1.989	C L PN	1.925 2-1/16 76401-S	1.925 2-1/16 74026-S	1.909 2-3/32 76402-S	1.893 2-7/64 76403-S	1.909 2-3/32 76404-S	1.893 2-7/64 76405-S	1.909 2-3/32 76097-S	1.893 2-7/64 74036-S	1.893 2-1/8 74037-S	1.893 2-1/8 74038-S	1.893 2-1/8 76406-S
	2.000-2.020	C L PN	1.956 2-3/32 76407-S	1.956 2-3/32 76408-S	1.940 2-1/8 76060-S	1.925 2-9/64 74034-S	1.940 2-1/8 76078-S	1.925 2-9/64 74035-S	1.940 2-1/8 76409-S	1.925 2-9/64 76410-S	1.925 2-5/32 76411-S	1.925 2-5/32 76412-S	1.925 2-5/32 74046-S
	2.031-2.051	C L PN	1.987 2-1/8 76413-S	1.987 2-1/8 74033-S	1.972 2-5/32 76414-S	1.956 2-11/64 76415-S	1.972 2-5/32 76416-S	1.956 2-11/64 76417-S	1.972 2-5/32 76098-S	1.956 2-11/64 74043-S	1.956 2-3/16 74044-S	1.956 2-3/16 74045-S	1.956 2-3/16 76418-S
	2.062-2.082	C L PN	2.018 2-5/32 76419-S	2.018 2-5/32 76420-S	2.003 2-3/16 76061-S	1.987 2-13/64 74041-S	2.003 2-3/16 76079-S	1.987 2-13/64 74042-S	2.003 2-3/16 76421-S	1.987 2-13/64 76422-S	1.987 2-7/32 76423-S	1.987 2-7/32 76424-S	1.987 2-7/32 74053-S
	2.094-2.114	C L PN	2.050 2-3/16 76425-S	2.050 2-3/16 74040-S	2.034 2-7/32 76426-S	2.018 2-15/64 76427-S	2.034 2-7/32 76428-S	2.018 2-15/64 76429-S	2.034 2-7/32 76099-S	2.018 2-15/64 74050-S	2.018 2-1/4 74051-S	2.018 2-1/4 74052-S	2.018 2-1/4 76430-S

See General Specifications, J-950.01.
*For use with SAE clevises.

Recommended Finish, S8; see Section "Z" Addendum.
Case harden to depth of .010-.005; surface, file hard.

FORD MOTOR COMPANY
STANDARD PARTS

CLEVIS PINS

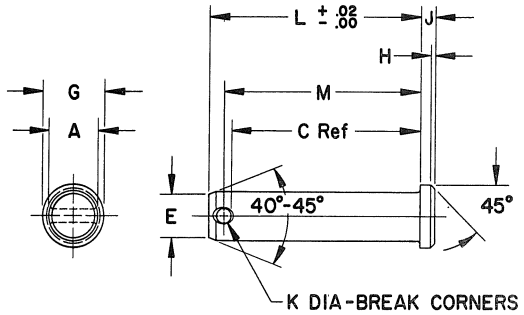

	PIN SIZE		3/16	1/4	5/16		3/8		7/16		1/2	9/16	5/8
A	Body Diameter		.186 .181	.248 .243	.311 .306		.373 .368		.436 .431		.496 .491	.559 .555	.621 .616
G	Head Diameter		.312	.375	.438		.500		.562		.625	.688	.812
J	Head Height		.062	.094	.094		.125		.156		.156	.156	.203
H	Head Chamfer		.016	.031	.031		.031		.047		.047	.047	.062
E	Chamfer Diameter		.152 .147	.214 .209	.265 .259		.327 .321		.390 .384		.439 .431	.502 .494	.564 .556
	Material		Steel - AISI C-1013 or Equivalent, "C", Min "L" and Ford Part Numbers										
K	Hole Diameter		.088 .073	.088 .073	.119 .104	.151 .136	.119 .104	.151 .136	.119 .104	.151 .136	.151 .136	.151 .136	.151 .136
M DISTANCE TO CENTER OF HOLE	2.125-2.145	C L PN	2.081 2-7/32 76431-S	2.081 2-7/32 76432-S	2.065 2-1/4 76062-S	2.050 2-17/64 74048-S	2.065 2-1/4 76080-S	2.050 2-17/64 74049-S	2.065 2-1/4 76433-S	2.050 2-17/64 76434-S	2.050 2-9/32 76435-S	2.050 2-9/32 76436-S	2.050 2-9/32 74060-S
	2.156-2.176	C L PN	2.112 2-1/4 76437-S	2.112 2-1/4 74047-S	2.097 2-9/32 76438-S	2.081 2-19/64 76439-S	2.097 2-9/32 76440-S	2.081 2-19/64 76441-S	2.097 2-9/32 76100-S	2.081 2-19/64 74057-S	2.081 2-5/16 74058-S	2.081 2-5/16 74059-S	2.081 2-5/16 76442-S
	2.188-2.208	C L PN	2.143 2-9/32 76443-S	2.143 2-9/32 76444-S	2.128 2-5/16 76063-S	2.112 2-21/64 74055-S	2.128 2-5/16 76081-S	2.112 2-21/64 74056-S	2.128 2-5/16 76445-S	2.112 2-21/64 76446-S	2.112 2-11/32 76447-S	2.112 2-11/32 76448-S	2.112 2-11/32 74067-S
	2.219-2.229	C L PN	2.175 2-5/16 76449-S	2.175 2-5/16 74054-S	2.159 2-11/32 76450-S	2.143 2-23/64 76451-S	2.159 2-11/32 76452-S	2.143 2-23/64 76453-S	2.159 2-11/32 76101-S	2.143 2-23/64 74064-S	2.143 2-3/8 74065-S	2.143 2-3/8 74066-S	2.143 2-3/8 76454-S
	2.250-2.270	C L PN	2.206 2-11/32 76455-S	2.206 2-11/32 76456-S	2.190 2-3/8 76064-S	2.175 2-25/64 74062-S	2.190 2-3/8 76082-S	2.175 2-25/64 74063-S	2.190 2-3/8 76457-S	2.175 2-25/64 76458-S	2.175 2-13/32 76459-S	2.175 2-13/32 76460-S	2.175 2-13/32 76461-S
	2.281-2.301	C L PN	2.237 2-3/8 76462-S	2.237 2-3/8 74061-S	2.222 2-13/32 76463-S	2.206 2-27/64 76464-S	2.222 2-13/32 76465-S	2.206 2-27/64 76466-S	2.222 2-13/32 76467-S	2.206 2-27/64 76468-S	2.206 2-7/16 76469-S	2.206 2-7/16 76470-S	2.206 2-7/16 76471-S
	2.312-2.332	C L PN	2.268 2-13/32 76472-S	2.268 2-13/32 76473-S	2.253 2-7/16 76474-S	2.237 2-29/64 76475-S	2.253 2-7/16 76476-S	2.237 2-29/64 76477-S	2.253 2-7/16 76478-S	2.237 2-29/64 76479-S	2.237 2-15/32 76480-S	2.237 2-15/32 76481-S	2.237 2-15/32 74074-S
	2.344-2.364	C L PN	2.300 2-7/16 76482-S	2.300 2-7/16 76483-S	2.284 2-15/32 76484-S	2.268 2-31/64 76485-S	2.284 2-15/32 76486-S	2.268 2-31/64 76487-S	2.284 2-15/32 76102-S	2.268 2-31/64 74071-S	2.268 2-1/2 74072-S	2.268 2-1/2 74073-S	2.268 2-1/2 76488-S
	2.375-2.395	C L PN	2.331 2-15/32 76489-S	2.331 2-15/32 76490-S	2.315 2-1/2 76065-S	2.300 2-33/64 74069-S	2.315 2-1/2 76083-S	2.300 2-33/64 74070-S	2.315 2-1/2 76491-S	2.300 2-33/64 76492-S	2.300 2-17/32 76493-S	2.300 2-17/32 76494-S	2.300 2-17/32 76495-S
	2.406-2.426	C L PN	2.362 2-1/2 76496-S	2.362 2-1/2 74068-S	2.347 2-17/32 76497-S	2.331 2-35/64 76498-S	2.347 2-17/32 76499-S	2.331 2-35/64 76500-S	2.347 2-17/32 76501-S	2.331 2-35/64 76502-S	2.331 2-9/16 76503-S	2.331 2-9/16 76504-S	2.331 2-9/16 76505-S
	2.438-2.458	C L PN	2.393 2-17/32 76506-S	2.393 2-17/32 76507-S	2.378 2-9/16 76508-S	2.362 2-37/64 76509-S	2.378 2-9/16 76510-S	2.362 2-37/64 76511-S	2.378 2-9/16 76512-S	2.362 2-37/64 76513-S	2.362 2-19/32 76514-S	2.362 2-19/32 76515-S	2.362 2-19/32 74081-S
	2.469-2.489	C L PN	2.425 2-9/16 76516-S	2.425 2-9/16 76517-S	2.409 2-19/32 76518-S	2.393 2-39/64 76519-S	2.409 2-19/32 76520-S	2.393 2-39/64 76521-S	2.409 2-19/32 76103-S	2.393 2-39/64 74078-S	2.393 2-5/8 74079-S	2.393 2-5/8 74080-S	2.393 2-5/8 76522-S
	2.500-2.520	C L PN	2.456 2-19/32 76523-S	2.456 2-19/32 76524-S	2.440 2-5/8 76066-S	2.425 2-41/64 74076-S	2.440 2-5/8 76084-S	2.425 2-41/64 74077-S	2.440 2-5/8 76525-S	2.425 2-41/64 76526-S	2.425 2-21/32 76527-S	2.425 2-21/32 76528-S	2.425 2-21/32 76529-S
	2.531-2.551	C L PN	2.487 2-5/8 76530-S	2.487 2-5/8 74075-S	2.472 2-21/32 76531-S	2.456 2-43/64 76532-S	2.472 2-21/32 76533-S	2.456 2-43/64 76534-S	2.472 2-21/32 76535-S	2.456 2-43/64 76536-S	2.456 2-11/16 76537-S	2.456 2-11/16 76538-S	2.456 2-11/16 76539-S
	2.562-2.582	C L PN	2.518 2-21/32 76540-S	2.518 2-21/32 76541-S	2.503 2-11/16 76542-S	2.487 2-45/64 76543-S	2.503 2-11/16 76544-S	2.487 2-45/64 76545-S	2.503 2-11/16 76546-S	2.487 2-45/64 76547-S	2.487 2-23/32 76548-S	2.487 2-23/32 76549-S	2.487 2-23/32 74088-S
	2.594-2.614	C L PN	2.550 2-11/16 76550-S	2.550 2-11/16 76551-S	2.534 2-23/32 76552-S	2.518 2-47/64 76553-S	2.534 2-23/32 76554-S	2.518 2-47/64 76555-S	2.534 2-23/32 76104-S	2.518 2-47/64 74085-S	2.518 2-3/4 74086-S	2.518 2-3/4 74087-S	2.518 2-3/4 76556-S

See General Specifications, J-950.01.
*For use with SAE clevises.

Recommended Finish, S8; see Section "Z" Addendum.
Case harden to depth of .010-.005; surface, file hard.

FORD MOTOR COMPANY
STANDARD PARTS

CLEVIS PINS

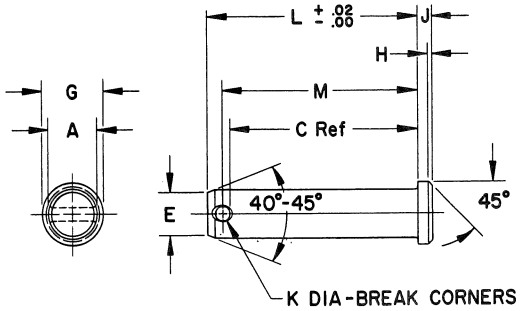

	PIN SIZE		3/16	1/4	5/16		3/8		7/16		1/2	9/16	5/8
A	Body Diameter		.186 .181	.248 .243	.311 .306		.373 .368		.436 .431		.496 .491	.559 .555	.621 .616
G	Head Diameter		.312	.375	.438		.500		.562		.625	.688	.812
J	Head Height		.062	.094	.094		.125		.156		.156	.156	.203
H	Head Chamfer		.016	.031	.031		.031		.047		.047	.047	.062
E	Chamfer Diameter		.152 .147	.214 .209	.265 .259		.327 .321		.390 .384		.439 .431	.502 .494	.564 .556
	Material		Steel - AISI C-1013 or Equivalent, Min "C", Min "L" and Ford Part Numbers										
K	Hole Diameter		.088 .073	.088 .073	.119 .104	.151 .136	.119 .104	.151 .136	.119 .104	.151 .136	.151 .136	.151 .136	.151 .136
M DISTANCE TO CENTER OF HOLE	2.625-2.645	C L PN	2.581 2-23/32 76557-S	2.581 2-23/32 76558-S	2.565 2-3/4 76067-S	2.550 2-49/64 74083-S	2.565 2-3/4 76085-S	2.550 2-49/64 74084-S	2.565 2-3/4 76559-S	2.550 2-49/64 76560-S	2.550 2-25/32 76561-S	2.550 2-25/32 76562-S	2.550 2-25/32 76563-S
	2.656-2.676	C L PN		2.612 2-3/4 74082-S	2.597 2-25/32 76564-S	2.581 2-51/64 76644-S	2.597 2-25/32 76565-S	2.581 2-51/64 76566-S	2.597 2-25/32 76567-S	2.581 2-51/64 76568-S	2.581 2-13/16 76569-S	2.581 2-13/16 76570-S	2.581 2-13/16 76571-S
	2.688-2.708	C L PN		2.643 2-25/32 76572-S	2.628 2-13/16 76573-S	2.612 2-53/64 76645-S	2.628 2-13/16 76574-S	2.612 2-53/64 76575-S	2.628 2-13/16 76576-S	2.612 2-53/64 76577-S	2.612 2-27/32 76578-S	2.612 2-27/32 76579-S	2.612 2-27/32 74094-S
	2.719-2.739	C L PN		2.675 2-13/16 76580-S	2.659 2-27/32 76581-S	2.643 2-55/64 76646-S	2.659 2-27/32 76582-S	2.643 2-55/64 76583-S	2.659 2-27/32 76105-S	2.643 2-55/64 74091-S	2.643 2-7/8 74092-S	2.643 2-7/8 74093-S	2.643 2-7/8 76584-S
	2.750-2.770	C L PN		2.706 2-27/32 76585-S	2.690 2-7/8 76068-S	2.675 2-57/64 74089-S	2.690 2-7/8 76086-S	2.675 2-57/64 74090-S	2.690 2-7/8 76586-S	2.675 2-57/64 76587-S	2.675 2-29/32 76588-S	2.675 2-29/32 76589-S	2.675 2-29/32 76590-S
	2.781-2.801	C L PN			2.722 2-29/32 76591-S	2.706 2-59/64 76647-S	2.722 2-29/32 76592-S	2.706 2-59/64 76593-S	2.722 2-29/32 76594-S	2.706 2-59/64 76595-S	2.706 2-15/16 76596-S	2.706 2-15/16 76597-S	2.706 2-15/16 76598-S
	2.812-2.832	C L PN			2.753 2-15/16 76599-S	2.737 2-61/64 76648-S	2.753 2-15/16 76600-S	2.737 2-61/64 76601-S	2.753 2-15/16 76602-S	2.737 2-61/64 76603-S	2.737 2-31/32 76604-S	2.737 2-31/32 76605-S	2.737 2-31/32 74099-S
	2.844-2.864	C L PN			2.784 2-31/32 76606-S	2.768 2-63/64 76649-S	2.784 2-31/32 76607-S	2.768 2-63/64 76608-S	2.784 2-31/32 76106-S	2.768 2-63/64 74096-S	2.768 3- 74097-S	2.768 3- 74098-S	2.768 3- 76609-S
	2.875-2.895	C L PN			2.815 3- 76610-S	2.800 3-1/64 76650-S	2.815 3- 76087-S	2.800 3-1/64 74095-S	2.815 3- 76611-S	2.800 3-1/64 76612-S	2.800 3-1/32 76613-S	2.800 3-1/32 76614-S	2.800 3-1/32 76615-S
	2.906-2.926	C L PN					2.847 3-1/32 76616-S	2.831 3-3/64 76617-S	2.847 3-1/32 76618-S	2.831 3-3/64 76619-S	2.831 3-1/16 76620-S	2.831 3-1/16 76621-S	2.831 3-1/16 76622-S
	2.938-2.958	C L PN					2.878 3-1/16 76623-S	2.862 3-5/64 76624-S	2.878 3-1/16 76625-S	2.862 3-5/64 76626-S	2.862 3-3/32 76627-S	2.862 3-3/32 76628-S	2.862 3-3/32 76629-S
	2.969-2.989	C L PN					2.909 3-3/32 76630-S	2.893 3-7/64 76631-S	2.909 3-3/32 76632-S	2.893 3-7/64 76633-S	2.893 3-1/8 76634-S	2.893 3-1/8 76635-S	2.893 3-1/8 76636-S
	3.000-3.020	C L PN					2.940 3-1/8 76637-S	2.925 3-9/64 76638-S	2.940 3-1/8 76639-S	2.925 3-9/64 76640-S	2.925 3-5/32 76641-S	2.925 3-5/32 76642-S	2.925 3-5/32 76643-S

See General Specifications, J-950.01. Recommended Finish, S8; see Section "Z" Addendum.
Case harden to depth of .010-.005; surface, file hard.
*For use with SAE clevises.

FORD MOTOR COMPANY
STANDARD PARTS

CLEVISES — NON-ADJUSTABLE

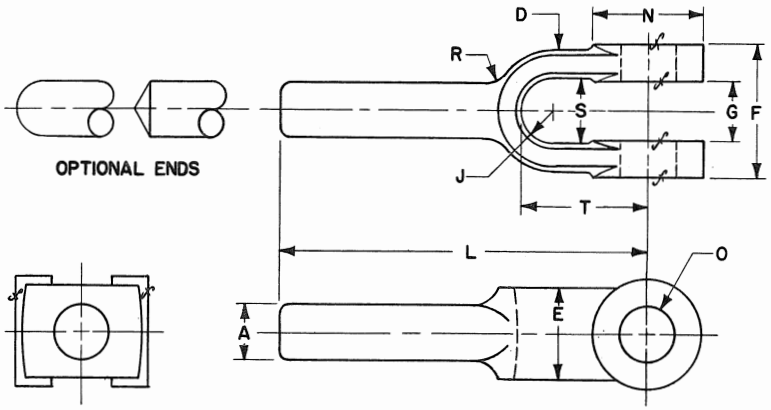

A	Rod Size	10	1/4	5/16	3/8	7/16	1/2	5/8
O	Hole Diameter	.1885 .1865	.2510 .2490	.3135 .3115	.3760 .3740	.4385 .4365	.5010 .4980	.6260 .6230
G	Width, Inside	.1975 .1775	.2912 .2712	.3537 .3337	.4475 .4275	.5100 .4900	.5725 .5525	.6975 .6775
F	Width, Outside	.4475 .4275	.6350 .6150	.7600 .7400	.8850 .8650	1.0100 .9900	1.1350 1.1150	1.3850 1.3650
N	Boss Diameter	.375	.500	.594	.688	.812	.938	1.188
S	Slot Width	.219	.312	.375	.469	.531	.594	.719
T	Slot Length	.438	.625	.750	.844	1.000	1.125	1.438
E	Body Width	.312	.438	.500	.625	.719	.812	1.062
D	Web Thickness	.094	.141	.172	.188	.219	.250	.312
J	Radius, Inside	.109	.156	.188	.234	.266	.297	.359
R	Radius, Outside	.094	.141	.172	.188	.219	.250	.312
L	Length	1 1/4	1 3/4	2	2 1/8	2 1/4	2 1/2	2 7/8
	Ford Part Numbers	97000-S	97001-S	97002-S	97003-S	97004-S	97005-S	97007-S

NOTES: For General Specifications see Page J-950.01. For Finishes see Section "Z" Addendum.
Material: Steel SAE 1120, SAE 1018 or equivalent. Rockwell hardness of B-70 minimum.

FORD MOTOR COMPANY
STANDARD PARTS

CLEVISES

ADJUSTABLE
CLASS 2B

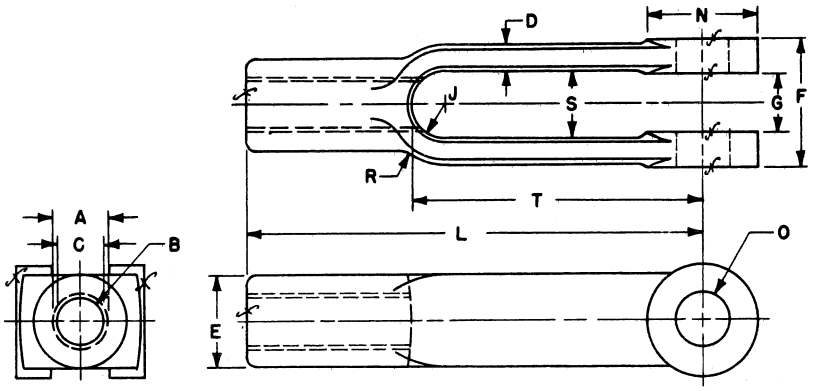

	Rod Size	10	1/4	5/16	3/8	7/16	1/2	5/8	3/4	7/8
B	Threads Per Inch	32	28	24	24	20	20	18	16	14
A	Major Dia. Thd. - Min.	.1900	.2500	.3125	.3750	.4375	.5000	.6250	.7500	.8750
C	Minor Dia. Thread	.164 .156	.220 .211	.277 .267	.340 .330	.395 .383	.457 .446	.578 .565	.696 .682	.814 .798
	Pitch Diameter	.1736 .1697	.2311 .2268	.2902 .2854	.3528 .3479	.4104 .4050	.4731 .4675	.5949 .5889	.7159 .7094	.8356 .8286
O	Hole Diameter	.1885 .1865	.2510 .2490	.3135 .3115	.3760 .3740	.4385 .4365	.5010 .4980	.6260 .6230	.7510 .7480	.8760 .8730
G	Width, Inside	.1975 .1775	.2912 .2712	.3537 .3337	.4475 .4275	.5100 .4900	.5725 .5525	.6975 .6775	.8225 .8025	.9475 .9275
F	Width, Outside	.4475 .4275	.6350 .6150	.7600 .7400	.8850 .8650	1.0100 .9900	1.1350 1.1150	1.3850 1.3650	1.6350 1.6150	1.8850 1.8650
N	Boss Diameter	.375	.500	.594	.688	.812	.938	1.188	1.438	1.688
S	Slot Width	.219	.312	.375	.469	.531	.594	.719	.844	.969
T	Slot Length	1.000	1.250	1.438	1.625	1.875	1.875	3.688	4.562	5.250
E	Body Diameter	.312	.438	.500	.625	.719	.812	1.062	1.250	1.438
D	Web Thickness	.094	.141	.172	.188	.219	.250	.312	.375	.438
J	Radius, Inside	.109	.156	.188	.234	.266	.297	.359	.422	.484
R	Radius, Outside	.094	.141	.172	.188	.219	.250	.312	.375	.438
L	Length	1 9/16	2	2 1/4	2 1/2	2 7/8	3	4 15/16	6 1/16	7 1/8
	Ford Part Numbers	97010-S	97011-S	97012-S	97013-S	97014-S	97015-S	97016-S	97017-S	97018-S

NOTES: For General Specifications see Page J-950.01. For Finishes see Section "Z" Addendum.
Material: Steel- SAE 1120, 1018 or equivalent. Rockwell hardness of B-70 minimum.

FORD MOTOR COMPANY
STANDARD PARTS

WOODRUFF KEYS

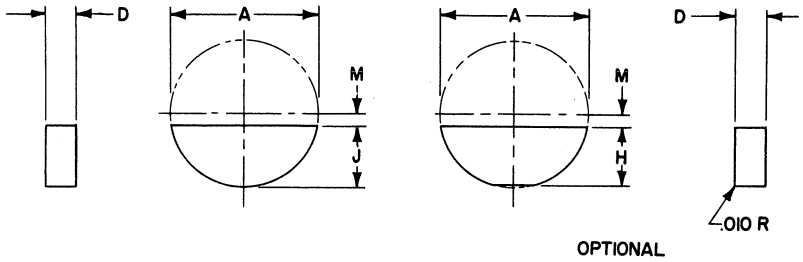

Thickness			Dia.	Key No.	Ford Nos. When Made From "C" Key Steel SOFT Rockwell C-10 Min.	Ford Nos. When Made From "C" Key Steel Hardened Rockwell C-40 to C-50	D Thickness	A Diameter	J Height	H Height (Optional)	M Dist. to Center	Weight lbs. per 1000
1/16	3/32	1/8	1/2	1 2 3	74140-S 74141-S 74142-S	74170-S 74171-S 74172-S	.0635-.0625 .0948-.0938 .1260-.1250	.500- .490 .500- .490 .500- .490	.203-.198 .203-.198 .203-.198	.194-.188 .194-.188 .194-.188	.047 .047 .047	1.3 1.9 2.5
3/32	1/8	5/32	5/8	4 5 6	74143-S 74144-S 74145-S	74173-S 74174-S 74175-S	.0948-.0938 .1260-.1250 .1573-.1563	.625- .615 .625- .615 .625- .615	.250-.245 .250-.245 .250-.245	.240-.234 .240-.234 .240-.234	.062 .062 .062	3.0 3.9 4.9
1/8	5/32	3/16	3/4	7 8 9	74146-S 74147-S 74148-S	74176-S 74177-S 74178-S	.1260-.1250 .1573-.1563 .1885-.1875	.750- .740 .750- .740 .750- .740	.313-.308 .313-.308 .313-.308	.303-.297 .303-.297 .303-.297	.062 .062 .062	6.1 7.5 9.0
5/32	3/16	1/4	7/8	10 11 A	74149-S 74150-S 74151-S	74179-S 74180-S 74181-S	.1573-.1563 .1885-.1875 .2510-.2500	.875- .865 .875- .865 .875- .865	.375-.370 .375-.370 .375-.370	.365-.359 .365-.359 .365-.359	.062 .062 .062	11. 13. 17.
3/16	1/4	5/16	1	13 15 B	74152-S 74153-S 74154-S	74182-S 74183-S 74184-S	.1885-.1875 .2510-.2500 .3135-.3125	1.000- .990 1.000- .990 1.000- .990	.438-.433 .438-.433 .438-.433	.428-.422 .428-.422 .428-.422	.062 .062 .062	17. 23. 29.
3/16	1/4	5/16	1 1/8	16 18 C	74155-S 74156-S 74157-S	74185-S 74186-S 74187-S	.1885-.1875 .2510-.2500 .3135-.3125	1.125-1.115 1.125-1.115 1.125-1.115	.484-.479 .484-.479 .484-.479	.475-.469 .475-.469 .475-.469	.078 .078 .078	22. 29. 36.
1/4	5/16	3/8	1 1/4	21 D E	74158-S 74159-S 74160-S	74188-S 74189-S 74190-S	.2510-.2500 .3135-.3125 .3760-.3750	1.250-1.240 1.250-1.240 1.250-1.240	.547-.542 .547-.542 .547-.542	.537-.531 .537-.531 .537-.531	.078 .078 .078	36. 45. 54.
1/4	5/16	3/8	1 3/8	22 23 F	74161-S 74162-S 74163-S	74191-S 74192-S 74193-S	.2510-.2500 .3135-.3125 .3760-.3750	1.375-1.365 1.375-1.365 1.375-1.365	.594-.589 .594-.589 .594-.589	.584-.578 .584-.578 .584-.578	.093 .093 .093	43. 54. 65.
1/4	5/16	3/8	1 1/2	24 25 G	74164-S 74165-S 74166-S	74194-S 74195-S 74196-S	.2510-.2500 .3135-.3125 .3760-.3750	1.500-1.490 1.500-1.490 1.500-1.490	.641-.636 .641-.636 .641-.636	.631-.625 .631-.625 .631-.625	.109 .109 .109	50. 63. 75.

FORD MOTOR COMPANY
STANDARD PARTS

EXPANSION PLUGS

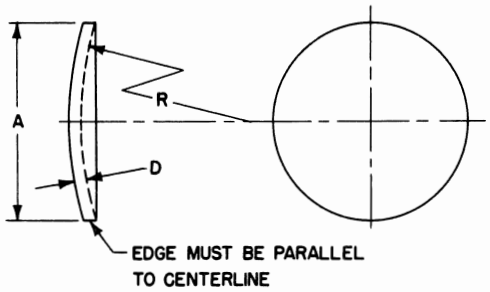

		1/4	5/16	3/8	7/16	1/2	9/16	5/8	11/16	3/4	13/16
A	Diameter	.252 .248	.315 .310	.377 .372	.440 .435	.502 .498	.565 .560	.628 .622	.690 .684	.753 .747	.815 .809
D	Thickness	.037 .029	.074 .060	.074 .060	.074 .060	.074 .060	.074 .060	.074 .060	.074 .060	.074 .060	.074 .060
R	Radius	.219	.266	.406	.469	.531	.625	.750	.875	.938	1.031
	Ford Part Numbers	74105-S	74106-S	74107-S	74108-S	74109-S	74110-S	74111-S	74112-S	74113-S	74114-S

		7/8	15/16	1	1 1/16	1 1/8	1 3/16	1 1/4	1 5/16	1 3/8	1 7/16
A	Diameter	.878 .872	.940 .934	1.003 .997	1.065 1.059	1.128 1.122	1.190 1.184	1.253 1.247	1.317 1.307	1.380 1.370	1.442 1.432
D	Thickness	.074 .060	.082 .068	.082 .068	.082 .068	.082 .068	.082 .068	.082 .068	.082 .068	.082 .068	.082 .068
R	Radius	1.094	1.156	1.125	1.250	1.375	1.500	1.625	1.750	1.812	2.000
	Ford Part Numbers	74115-S	74116-S	74117-S	74118-S	74119-S	74120-S	74121-S	74122-S	74123-S	74124-S

		1 1/2	1 5/8	1 3/4	1 7/8	2	2 1/8	2 1/4	2 3/8	2 1/2	2 3/4
A	Diameter	1.505 1.495	1.630 1.620	1.755 1.745	1.880 1.870	2.005 1.995	2.130 2.120	2.255 2.245	2.380 2.370	2.505 2.495	2.755 2.745
D	Thickness	.082 .068	.082 .068	.082 .068	.082 .068	.082 .068	.082 .068	.082 .068	.082 .068	.082 .068	.082 .068
R	Radius	2.125	2.375	2.688	2.875	3.188	3.250	3.562	3.875	4.156	4.500
	Ford Part Numbers	74125-S	74126-S	74127-S	74128-S	74129-S	74130-S	74131-S	74132-S	74133-S	74134-S

NOTES: MATERIAL: Type L.C.O.H. Steel.
Thickness Tolerance Based on A.I.S.I.Steel Products Manual.
Expansion Plugs must be free from burrs, loose scale, sharp edges and all other defects that might affect their serviceability.

FORD MOTOR COMPANY
STANDARD PARTS

PLUG BUTTONS

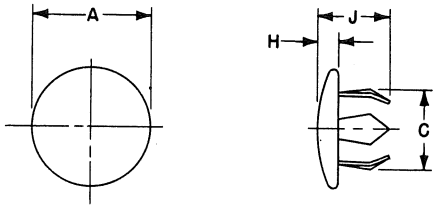

Ford Part Numbers	FOR USE IN Hole Dia.	FOR USE IN Matl. Thick.	A	J	C	H	No. of Prongs	Material
74200-S	1/8	.050-.078	.328	.203	.141	.063	4	SAE 1010 Steel
74201-S	3/16	.037-.062	.344	.219	.203	.063	6	SAE 1010 Steel
74202-S	13/64	.037-.046	.344	.219	.219	.078	6	SAE 1010 Steel
74203-S	7/32	.062-.078	.344	.219	.234	.063	6	SAE 70-B Brass
74204-S	1/4	.062-.078	.406	.250	.266	.078	6	SAE 70-B Brass
74207-S	17/64	.037-.078	.438	.359	.281	.188	6	SAE 70-B Brass
74208-S	9/32	.032-.078	.406	.250	.299	.078	6	SAE 1010 Steel
74205-S	5/16	.020-.062	.438	.219	.328	.063	6	SAE 70-B Brass
74206-S	5/16	.062-.078	.438	.250	.328	.063	6	SAE 1010 Steel
74209-S	21/64	.037-.062	.438	.250	.344	.063	6	SAE 70-B Brass
74210-S	11/32	.037-.062	.500	.219	.359	.063	6	SAE 1010 Steel
74230-S	11/32	.093-.125	.531	.344	.375	.094	6	SAE 1010 Steel
74231-S	23/64	.025-.093	.563	.266	.375	.078	6	SAE 1010 Steel
74232-S	3/8	.032-.078	.531	.391	.406	.078	6	SAE 70-B Brass
74211-S	3/8	.125-.156	.531	.375	.391	.078	6	SAE 1010 Steel
74233-S	25/64	.078-.090	.500	.234	.406	.063	6	SAE 1010 Steel
74212-S	13/32	.062-.078	.500	.203	.422	.063	6	SAE 1010 Steel
74234-S	7/16	.020-.078	.656	.219	.469	.078	8	SAE 1010 Steel
74235-S	29/64	.050-.062	.656	.250	.469	.078	8	SAE 70-B Brass
74213-S	15/32	.125-.171	.625	.375	.484	.063	6	SAE 1010 Steel
74236-S	31/64	.125-.156	.625	.375	.500	.078	6	SAE 1045 Steel
74214-S	1/2	.037-.062	.656	.266	.531	.078	8	SAE 1010 Steel
74237-S	1/2	.093-.125	.625	.344	.531	.063	6	SAE 70-B Brass
74215-S	33/64	.037-.062	.656	.266	.531	.078	8	SAE 1010 Steel
74238-S	17/32	.050-.062	.656	.266	.547	.078	8	SAE 1010 Steel
74216-S	17/32	.125-.156	.688	.375	.547	.078	8	SAE 70-B Brass
74217-S	9/16	.062-.078	.719	.281	.594	.063	8	SAE 1010 Steel
74218-S	5/8	.062-.078	.797	.281	.641	.078	8	SAE 1010 Steel
74239-S	5/8	.109-.125	.797	.313	.656	.078	8	SAE 1010 Steel
74240-S	41/64	.020-.040	.797	.281	.656	.078	8	SAE 1010 Steel
74219-S	11/16	.037-.062	.875	.266	.703	.078	12	SAE 1010 Steel
74241-S	23/32	.078-.093	.875	.266	.734	.078	12	SAE 1010 Steel
74220-S	3/4	.037-.093	.938	.297	.766	.094	12	SAE 1010 Steel
74242-S	3/4	.109-.125	.938	.359	.766	.094	12	SAE 1010 Steel
74243-S	13/16	.046-.078	1.047	.281	.844	.078	12	SAE 1010 Steel
74244-S	27/32	.046-.078	1.047	.281	.859	.078	12	SAE 1010 Steel
74221-S	7/8	.062-.093	1.063	.297	.891	.063	12	SAE 1010 Steel
74222-S	7/8	.125-.171	1.063	.359	.906	.078	12	SAE 1010 Steel
74245-S	29/32	.031-.062	1.000	.344	.922	.125	12	SAE 1010 Steel
74246-S	15/16	.062-.078	1.156	.281	.969	.063	12	SAE 1010 Steel
74247-S	61/64	.032-.062	1.156	.250	.969	.047	12	SAE 70-B Brass
74223-S	63/64	.046-.062	1.156	.297	1.000	.094	12	SAE 70-B Brass
74224-S	1	.062-.078	1.156	.297	1.031	.078	12	SAE 1010 Steel
74248-S	1	.109-.125	1.156	.375	1.031	.078	12	SAE 1010 Steel
74249-S	1 1/16	.062-.075	1.313	.297	1.094	.094	12	SAE 1010 Steel
74250-S	1 1/8	.050-.078	1.313	.344	1.156	.094	12	SAE 1010 Steel
74251-S	1 5/32	.037-.078	1.344	.344	1.172	.094	12	SAE 1010 Steel
74252-S	1 3/16	.062-.078	1.438	.297	1.203	.078	12	SAE 1010 Steel
74253-S	1 7/32	.037-.078	1.438	.328	1.234	.078	12	SAE 1010 Steel
74254-S	1 1/4	.037-.078	1.438	.344	1.266	.094	12	SAE 1045 Steel
74225-S	1 1/4	.062-.093	1.438	.313	1.266	.094	12	SAE 1010 Steel
74255-S	1 5/16	.037-.062	1.563	.359	1.328	.094	12	SAE 1010 Steel
74256-S	1 3/8	.037-.044	1.563	.406	1.422	.109	12	SAE 1010 Steel
74257-S	1 3/8	.125-.140	1.563	.406	1.391	.094	12	SAE 1010 Steel
74226-S	1 7/16	.125-.140	1.609	.438	1.469	.109	12	SAE 1010 Steel
74227-S	1 1/2	.037-.062	1.641	.406	1.531	.094	12	SAE 1010 Steel
74228-S	1 5/8	.062-.109	1.797	.344	1.656	.125	12	SAE 1010 Steel
74258-S	1 3/4	.037-.078	1.938	.344	1.781	.125	12	SAE 1045 Steel
74259-S	1 25/32	.045-.093	1.938	.438	1.813	.094	12	SAE 1010 Steel
74260-S	1 7/8	.062-.140	2.188	.500	1.891	.219	14	SAE 1010 Steel
74261-S	2	.037-.125	2.313	.500	2.031	.219	14	SAE 1010 Steel
74262-S	2 3/32	.046-.062	2.563	.563	2.125	.219	14	SAE 1010 Steel
74229-S	2 1/4	.037-.093	2.563	.500	2.281	.219	14	SAE 1045 Steel
74263-S	2 1/2	.037-.109	2.813	.344	2.531	.094	16	SAE 1010 Steel
74264-S	3	.093-.156	3.813	.641	3.063	.234	12	SAE 1010 Steel

NOTES: Plug Buttons should securely assemble into holes of the specified diameter, which have been punched or drilled into material of the given thickness. The inspection should be based on suitability of the plugs for the purpose intended and on their proper functioning, rather than on exact dimensional accuracy.

GENERAL SPECIFICATIONS

COTTER PINS

HEAD DESIGN: Slight deviations in head contours are permissible, however, the outside diameters given shall be adhered to.

PRONGS AND ENDS: Prongs shall be parallel; ends shall not be open.

RETAINER SPRINGS

PERFORMANCE: Springs must be capable of withstanding repeated assembly and disassembly without breakage or appreciable loss of spring quality.

STRAIGHT PINS

TOLERANCES IN LENGTH: The tolerance in length shall be plus and minus 0.012 inch.

TOLERANCES IN CHAMFER LENGTH: The tolerance in chamfer length shall be plus and minus 0.010 inch.

SPRING PINS

LENGTH TOLERANCE: The length tolerance for Coiled Spring Pins of 1/16 to 5/16 inch diameter is plus or minus .010 inch; for diameters over 5/16, the length tolerance is plus or minus .015 inch. The length tolerance for Rolled Spring Pins is shown in the following table.

Length Range	3/16 to 1 Incl.	Over 1 to 2 Incl.	Over 2 to 3 Incl.	Over 3 to 4 Incl.
Tolerance on Length	±.015	±.020	±.025	±.030

GENERAL SPECIFICATIONS

MATERIAL AND HARDNESS: The material and hardness of spring pins shall be in accordance with the following table.

Wall Thickness Range	Over	.001	.010	.025	.050
	To	.010	.025	.050	.094
Hardness Test		Tukon DPH[1]	Rockwell 15N	Rockwell A	Rockwell C
Type and Material		Hardness			
SAE Rolled 1070-1095 Steel		458-562	83.6-87	73.6-78	46-53
SAE Coiled 1070 Steel		393-515	80.4-85.5	70.4-75.9	40-50

[1]Diamond pyramidal hardness.

Where corrosion preventive treatment applied to carbon steel spring pins is such that it might produce hydrogen embrittlement, the spring pins shall be baked or treated in such a manner as to obviate such embrittlement.

HARDNESS TEST: Rolled Spring Pins shall have hardness readings taken near the center of a longitudinal flat ground on the pin at right angles to the slot. Coiled Spring Pins shall be cut in half along the longitudinal axis and the hardness readings taken on the inside surface of the outer half coil. Proper hardness reading and test to be used for various wall thickness is given in the table under MATERIAL AND HARDNESS.

PERFORMANCE: Spring pins shall withstand the minimum double shear loads specified in the dimensional tables when tested in accordance with the following procedure.

The shear test shall be performed in a fixture in which the pin hole diameters conform to the recommended hole size for the pins being tested. Shearing members shall have a Rockwell hardness of C 58 or equivalent and the clearance between the members shall not exceed .005 inch. Pins shall be located so that the slot is approximately at right angles to the line of application of the load, with the shear plane at least one diameter away from each end of the pin. The speed

GENERAL SPECIFICATIONS

of load application shall not exceed 1/2 inch per minute. Pins too short to be tested in double shear shall be tested by shearing two pins simultaneously in single shear. Spring pins which have been sheared shall show a ductile shear without longitudinal cracks. Typical spring pin shear test fixtures are illustrated below.

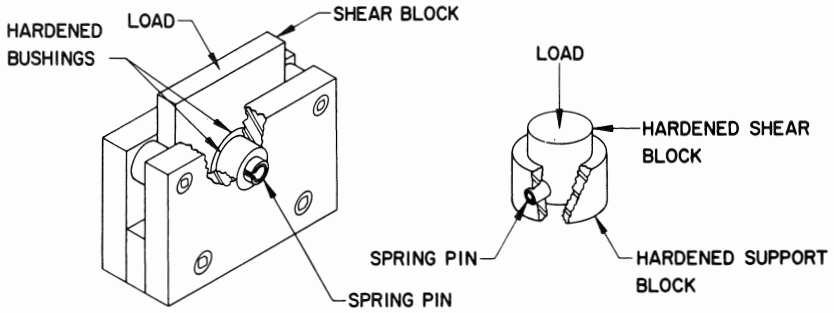

TYPICAL SPRING PIN SHEAR TEST FIXTURES

DOWEL PINS

TOLERANCES IN LENGTH: The tolerance in length shall be plus and minus 0.012 inch.

TOLERANCES IN CHAMFER LENGTH: The tolerance in chamfer length shall be plus and minus 0.010 inch.

TAPER PINS

DIAMETER - SMALL END: The diameter of the pin at the small end may be determined by multiplying the length by 0.02083 and subtracting the result from the large diameter.

TOLERANCES IN LENGTH: The tolerance in length shall be plus and minus 0.030 inch.

CLEVIS PINS

TOLERANCES: The tolerances on the distance from the underside of the head to centerline of the hole (M) shall be plus 0.020 and minus 0.000 inch.

GENERAL SPECIFICATIONS

COTTER PIN SIZES: Recommended cotter pin sizes are as follows:

CLEVIS PIN SIZE	3/16	1/4	5/16		3/8	
Hole Size	.088 .073	.088 .073	.119 .104	.151 .136	.119 .104	.151 .136
Recommended Cotter Pin	72000-S	72003-S	72004-S	72005-S	72009-S	72010-S

SIZES CONTINUED

CLEVIS PIN SIZE	7/16		1/2	9/16	5/8
Hole Size	.119 .104	.151 .136	.151 .136	.151 .136	.151 .136
Recommended Cotter Pin	72016-S	72017-S	72026-S	72026-S	72035-S

GENERAL

DEFECTS: Pins, retainer springs, clevises, keys, plugs, and plug buttons shall be free from burrs, loose scale, sharp and or ragged edges, seams, brittleness or other defects which might affect their serviceability.

The Specifications in this section were developed without considering whether patents may or may not be involved. In all cases, therefore, the supplier shall be required to assume patent liability.

FORD MOTOR COMPANY
STANDARD PARTS

SECTION K

FASTENERS

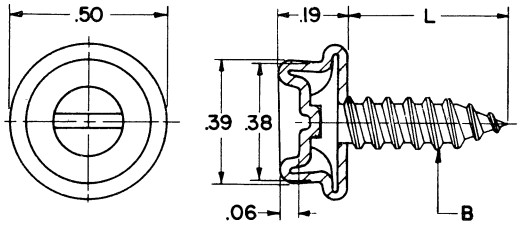

STUD-SHEET METAL SCREW BASE

B	Screw Size	#6	#8	#10
L	LENGTH	FORD PART NUMBERS		
	3/8		95193-S	95195-S
	1/2 5/8 3/4 1	95201-S 95211-S	95203-S 95213-S 95223-S 95243-S	95215-S 95225-S

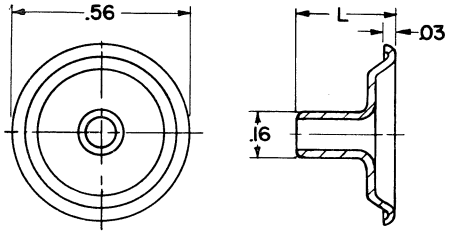

TYPE "A"

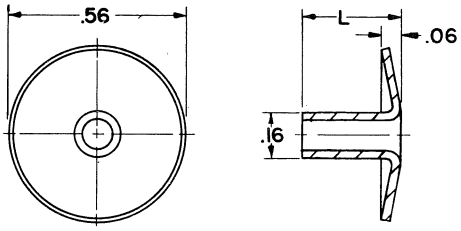

TYPE "B"

CLINCH EYELET

L	Overall Length		7/32	1/4	9/32	5/16	13/32
	Ford Part Numbers	Type "A"	95441-S	95442-S	95443-S		95447-S
	Ford Part Numbers	Type "B"	95449-S	95450-S		95452-S	

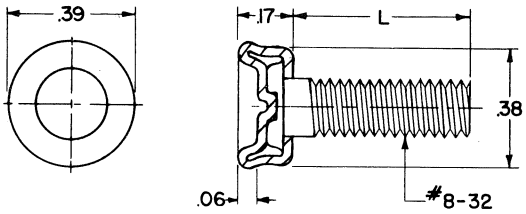

STUD-MACHINE SCREW BASE

L	LENGTH	3/16	1/4	25/64
	Ford Part Numbers	95301-S	95317-S	95353-S

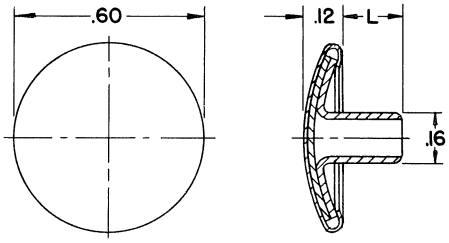

BUTTON

L	LENGTH	5/32	3/16	1/4
	Ford Part Numbers	95377-S	95397-S	95437-S

NOTE:

For Finishes and General Specifications See Page K-101. For Special Finishes See Addendum.

FASTENERS

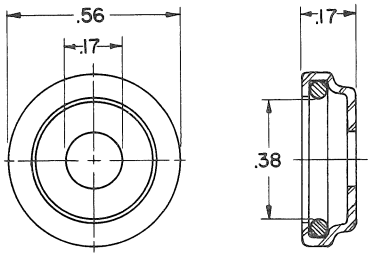

SOCKET

Ford Part Number	95460-S

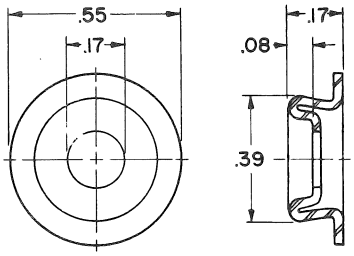

CLINCH STUD

Ford Part Number	95464-S

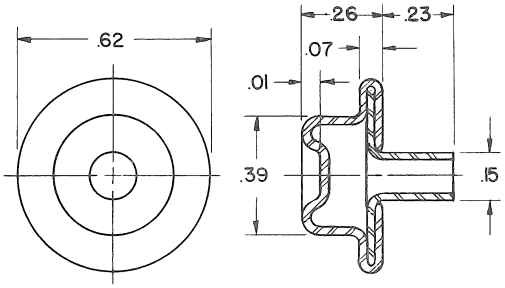

BUTTON STUD

Ford Part Number	95472-S

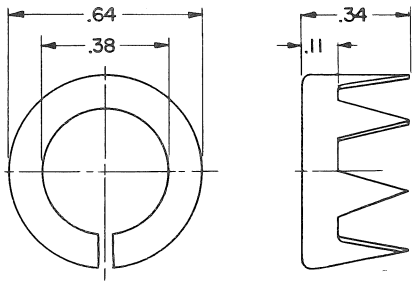

SPLIT RING SOCKET

Ford Part Number	95481-S

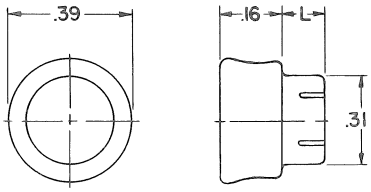

EXPANSIBLE STUD

L	Rivet Length	7/64	5/32
	Ford Part Numbers	95461-S	95463-S

NOTE:

For Finishes and General Specifications See Page K-101. For Special Finishes See Addendum.

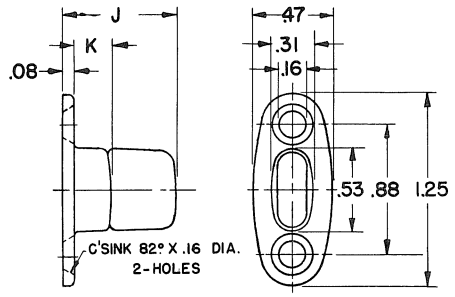

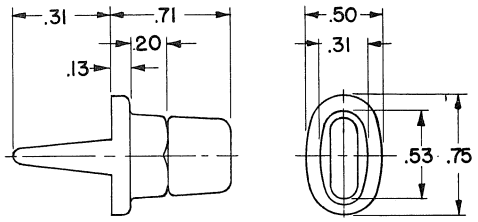

TURN BUTTON—TWO SCREW BASE

K	Grip	13/64	21/64	7/8
J	Overall Height	.688	.813	1.250
	Ford Part Numbers	95496-S	95497-S	95498-S

TURN BUTTON—PRONGED BASE

Ford Part Numbers	95500-S

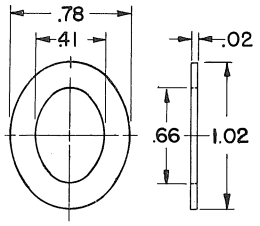

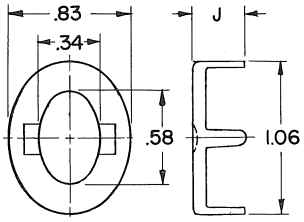

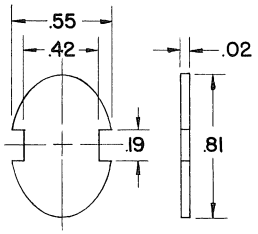

EYELET WASHER

Ford Part Number	95511-S

EYELET

J	Overall Height	5/16	3/8
	Ford Part Numbers	95509-S	95510-S

CLINCH PLATE

Ford Part Number	95508-S

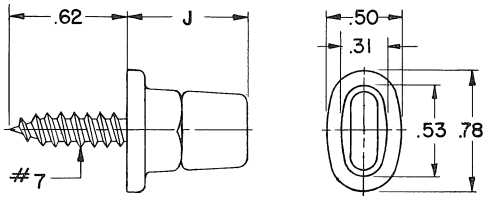

TURN BUTTON—BASE

J	Overall Height	27/32	15/16
	Ford Part Numbers	95503-S	95504-S

NOTE:

For Finishes and General Specifications See Page K-101. For Special Finishes See Addendum.

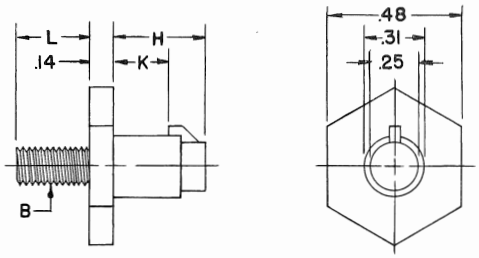

STUD-MACHINE SCREW

K	Grip	3/16	9/32	3/8
H	Head Length	.406	.469	.563

B	Screw Size	# 8-32		
L	LENGTH	FORD PART NUMBERS		
	3/8 5/8		95579-S 95595-S	

B	Screw Size	# 10-32		
L	LENGTH	FORD PART NUMBERS		
	1/4 3/8	95598-S 95606-S	95599-S 95607-S	95600-S 95608-S

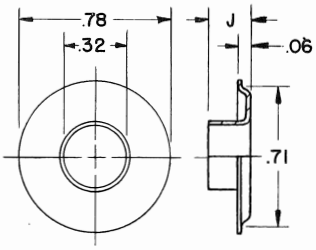

EYELET

J	Overall Height	7/32	5/16	13/32
	Ford Part Numbers	95629-S	95630-S	95706-S

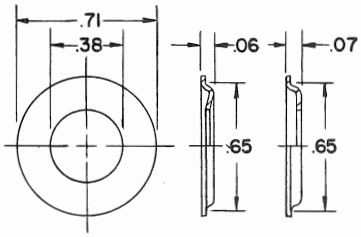

TYPE "A" TYPE "B"

WASHER

Ford Part Number - Type "A"	95627-S
Ford Part Number - Type "B"	95628-S

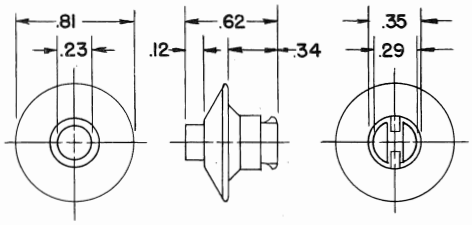

STUD-FLUSH TYPE

Ford Part Number	95626-S

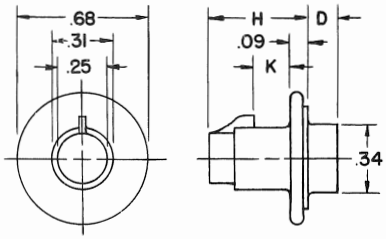

STUD-CLINCH TYPE

K	Grip	3/16			9/32		3/8		17/32	
H	Head Length	.500			.531		.656		.813	
D	Shank Length	.156	.188	.250	.188	.250	.188	.250	.188	.250
	Ford Part Numbers	95631-S	95632-S	95633-S	95635-S	95636-S	95637-S	95638-S	95639-S	95640-S

NOTES: For General Specifications See Page K-101. For Finishes See Addendum.

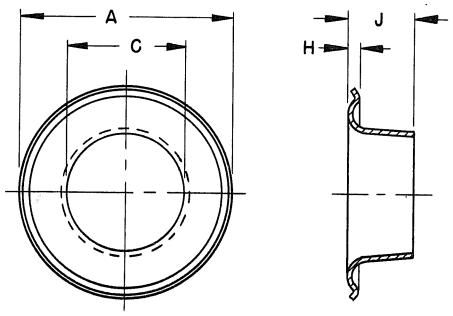

GROMMET

		#3	#4	#5	#6
A	Outside Diameter	.984	1.047	1.188	1.797
J	Overall Height	.313	.328	.391	.297
H	Crown Height	.063	.063	.063	.094
C	Inside Diameter	.453	.484	.625	.813
	Ford Part Numbers	95558-S	95559-S	95560-S	95561-S

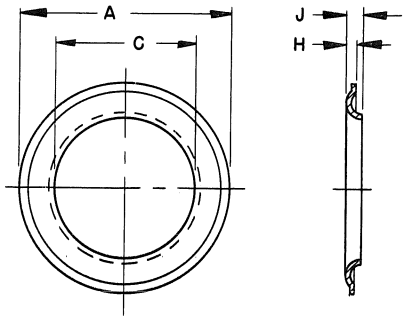

GROMMET WASHER

		#3	#4	#5	#6
A	Outside Diameter	.984	1.047	1.188	1.828
J	Overall Height	.078	.078	.063	.094
H	Crown Height	.047	.047	.047	.063
C	Inside Diameter	.547	.578	.734	.875
	Ford Part Numbers	95566-S	95567-S	95568-S	95569-S

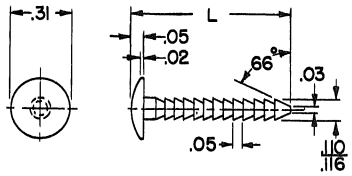

"G" STEEL WIRE

RATCHET NAIL

L	LENGTH	1/2	3/4
	Ford Part Numbers	95517-S	95519-S

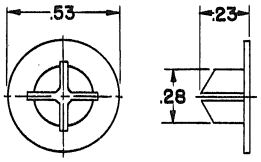

FOR .270 DIA. HOLE

STUD-NAIL RETAINER

Ford Part Number	95520-S

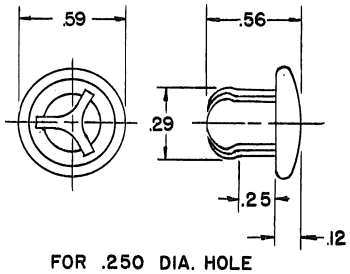

FOR .250 DIA. HOLE

CAPPED STUD

Ford Part Number	95522-S

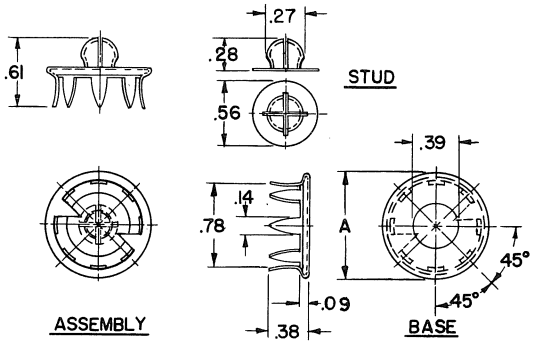

FLOATING STUD

A	Outside Diameter	13/16	15/16
	Ford Part Numbers	95515-S	95516-S

NOTE: For General Specifications See Page K-101. For Finishes See Addendum.

STANDARD PARTS

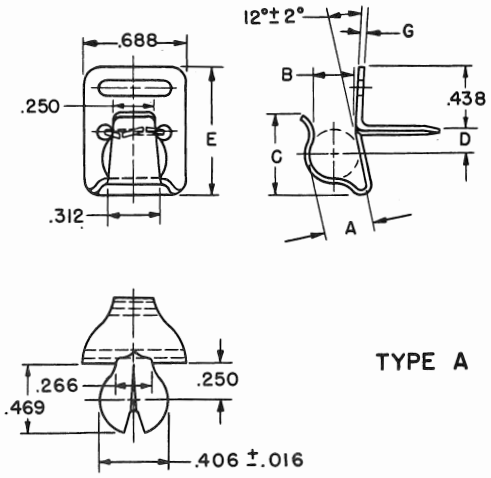

TYPE A

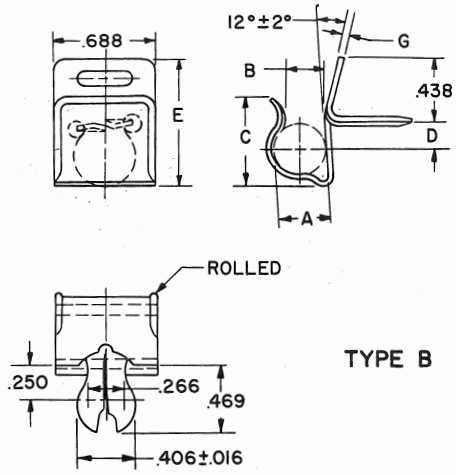

TYPE B

		TYPE A				TYPE B							
	Tube or Cable Diameter	1/4	5/16	3/8	15/32	3/16	1/4	5/16	3/8	7/16	17/32	5/8	3/4
A	Diameter	.234	.297	.344	.438	.161	.234	.297	.359	.406	.516	.563	.734
B	Width of Opening	.188	.219	.266	.375	.133	.188	.250	.297	.344	.406	.500	.563
C	Height	.672	.625	.563	.563	.563	.500	.640	.625	.594	.688	.719	.875
D	Center to Prong	.250	.219	.156	.156	.188	.234	.219	.188	.219	.219	.188	.188
E	Overall Height	.875	.875	.875	.844	.875	.875	.875	.875	.875	.969	.875	1.063
G	Material Thickness	.037	.037	.037	.037	.025	.025	.037	.037	.037	.037	.037	.037
	Ford Part Numbers	95800-S	95801-S	95802-S	95803-S	95804-S	95805-S	95806-S	95807-S	95808-S	95809-S	95810-S	95811-S

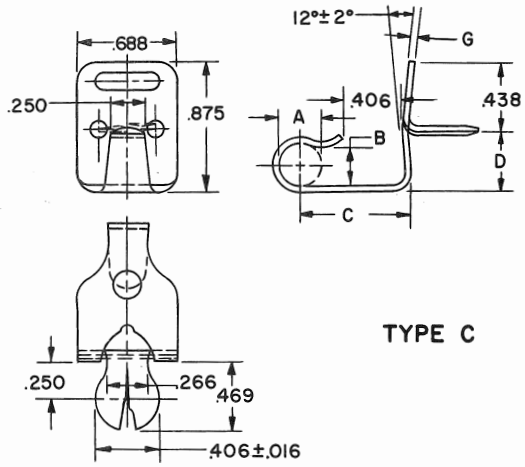

TYPE C

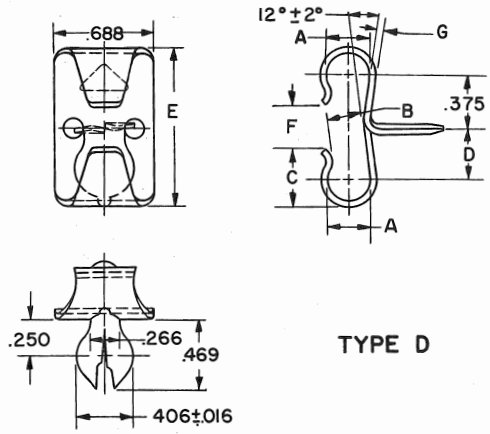

TYPE D

		TYPE C			TYPE D		
	Tube or Cable Diameter	3/16	17/64	5/16	1/4	5/16	3/8
A	Diameter	.172	.250	.297	.234	.297	.359
B	Width of Opening	.141	.219	.266	.188	.266	.297
C	Height	.438	.438	.406	.391	.375	.359
D	Center to Prong	.750	.750	.719	.375	.328	.313
E	Overall Height				1.094	1.078	1.125
F	Center Distance				.313	.328	.406
G	Material Thickness	.037	.032	.037	.037	.037	.037
	Ford Part Numbers	95812-S	95813-S	95814-S	95815-S	95816-S	95817-S

Hole for Assembly	
Material	Punch
.031 to .062	1/4
.094 to .156	9/32
.188 to .219	19/64

NOTES: For Finishes and General Specifications See Page K-101. For Special Finishes see Addendum.
MATERIAL & MANUFACTURE: Clips covered by this specification shall be made from SAE 1065 Spring Steel. They shall be formed and tempered to give spring tension to the prongs after assembly in the hole and to the clip with tubing or cable in place.
DIMENSIONS & TOLERANCES: Owing to the difficulty of maintaining exact dimensions in all details of their complicated design, inspection should be based on suitability of the clips for the purpose intended and on their proper functioning rather than on exact dimensional accuracy.

Clips shall be free from burrs, loose scale, sharp edges, and any other defect that might affect their serviceability.

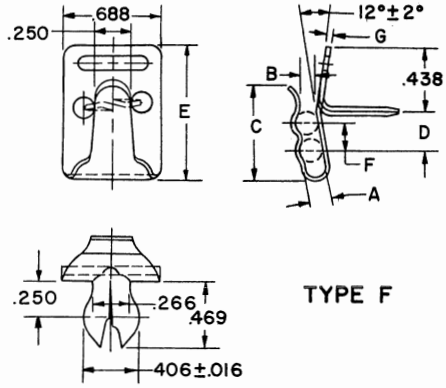

TYPE F

		TYPE F		
	Tube or Cable Diameter	1/8	3/16	1/4
A	Diameter	.120	.172	.230
B	Width of Opening	.078	.094	.140
C	Height	.719	.703	.719
D	Center to Prong	.313	.281	.219
E	Overall Height	.875	.938	.813
F	Center Distance	.188	.177	.250
G	Material Thickness	.025	.037	.037
	Ford Part Numbers	95818-S	95819-S	95820-S

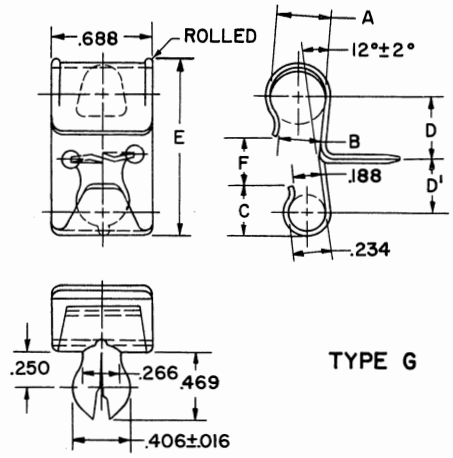

TYPE G

		TYPE G			
	Tube or Cable Diameter	5/16&1/4	5/16&1/4	3/8&1/4	7/16&1/4
A	Diameter	.281	.297	.344	.406
B	Width of Opening	.234	.250	.313	.375
C	Height	.359	.359	.375	.375
D	Center to Prong	.563	.484	.438	.500
D'	Center to Prong	.422	.422	.375	.375
E	Overall Height	1.328	1.250	1.188	1.281
F	Center Distance	.531	.438	.313	.438
G	Material Thickness	.032	.025	.032	.032
	Ford Part Numbers	95821-S	95822-S	95823-S	95824-S

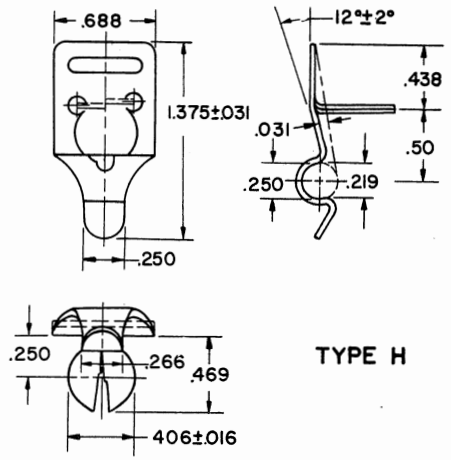

TYPE H

TYPE H	
Ford Part Number	95826-S

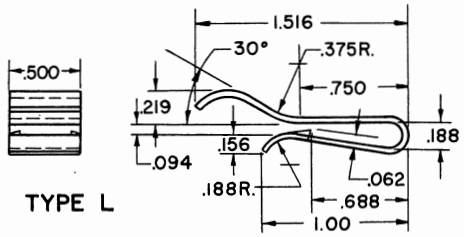

TYPE L

TYPE L	
Ford Part Number	95825-S

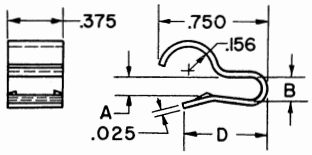

TYPE M

		TYPE M			
A	Opening	.063	.109	.125	.156
B	Width	.156	.156	.250	.156
D	Prong Length	.641	.672	.672	.672
	Ford Part Numbers	95827-S	95828-S	95829-S	95830-S

Hole for Assembly	
Material	Punch
.031 to .062	1/4
.094 to .156	9/32
.188 to .219	19/64

NOTES: For Finishes and General Specifications See Page K-101. For Special Finishes See Addendum.
MATERIAL & MANUFACTURE: Clips covered by this specification shall be made from SAE 1065 Spring Steel. They shall be formed and tempered to give spring tension to the prongs after assembly in the hole and to the clip with tubing or cable in place.
DIMENSIONS & TOLERANCES: Owing to the difficulty of maintaining exact dimensions in all details of their complicated design, inspection should be based on suitability of the clips for the purpose intended and on their proper functioning rather than on exact dimensional accuracy.

FASTENERS

Fasteners shown on Pages K-1 to K-5 are usually made of commercial grades of brass. Fastener studs having a machine screw base, the screws shall be M-3422-A Steel or SAE 80-B Brass. Fastener studs with sheet metal screw base, the screws shall be SAE 1016, SAE 1018, or SAE 1022 Steel, case hardened case depth .002-.005.

Fasteners must be free from burrs, loose scale, sharp edges, corrosion or any foreign matter that might in any way affect their serviceability.

FORD MOTOR COMPANY
STANDARD PARTS

RETAINING RINGS
TYPE HU

INTERNAL

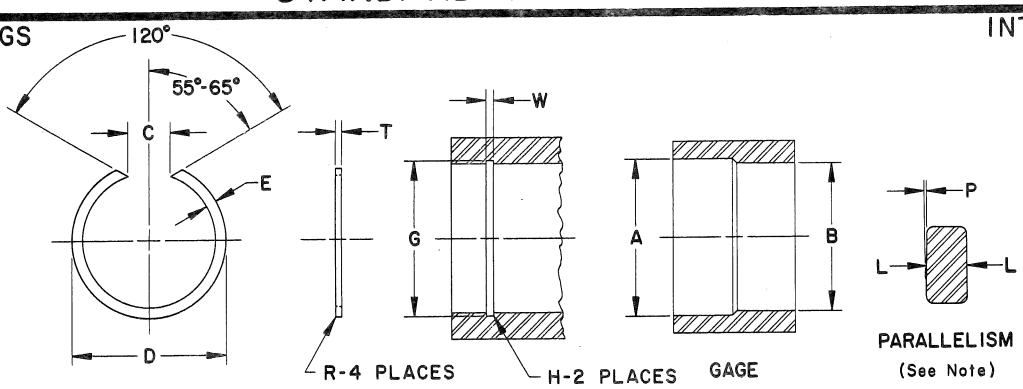

NOMINAL HOUSING DIAMETER	RETAINER DIMENSIONS												GAGE		HOUSING			FORD PART NUMBERS
	D FREE OUTSIDE DIAMETER		T SECTION THICKNESS		E SECTION WIDTH		C GAP		R RADIUS		RADIAL DEFORMATION	P PARALLELISM	B DIA.	A DIA.	G REC. GROOVE DIA.	W REC. GROOVE WIDTH	H GROOVE RADIUS	
	MAX	MIN	MAX	MIN	MAX	MIN	MAX	MIN	MAX	MIN	MAX	MAX	+.000 -.001	+.001 -.000	±.005	MIN	MAX	
7/8	.944	.931	.033	.029	.082	.074	.31	.24	.010	.005	.010	.002	.875	.929	.922*	.038	.005	97757-S
15/16	1.008	.994	.033	.029	.082	.074	.34	.24	.010	.005	.010	.002	.938	.991	.984*	.038	.005	97758-S
1	1.072	1.057	.044	.040	.082	.074	.34	.24	.010	.005	.011	.002	1.000	1.056	1.047	.051	.005	97759-S
1-1/16	1.136	1.120	.044	.040	.082	.074	.34	.24	.010	.005	.011	.002	1.062	1.118	1.109	.051	.005	97760-S
1-1/8	1.210	1.193	.049	.045	.098	.090	.38	.27	.010	.005	.012	.003	1.125	1.192	1.181	.056	.005	97761-S
1-3/16	1.274	1.256	.049	.045	.098	.090	.40	.27	.010	.005	.012	.003	1.188	1.255	1.244	.056	.005	97762-S
1-1/4	1.338	1.319	.049	.045	.098	.090	.40	.27	.010	.005	.013	.003	1.250	1.318	1.306	.056	.005	97763-S
1-5/16	1.402	1.382	.049	.045	.098	.090	.41	.28	.010	.005	.014	.003	1.312	1.381	1.369	.056	.005	97764-S
1-3/8	1.466	1.445	.049	.045	.098	.090	.41	.28	.010	.005	.014	.003	1.375	1.443	1.431	.056	.005	97765-S
1-7/16	1.530	1.508	.049	.045	.098	.090	.41	.28	.010	.005	.015	.003	1.438	1.507	1.494	.056	.005	97766-S
1-1/2	1.612	1.590	.064	.060	.129	.121	.48	.34	.010	.005	.016	.004	1.500	1.588	1.575	.074	.005	97767-S
1-9/16	1.677	1.653	.064	.060	.129	.121	.48	.34	.010	.005	.017	.004	1.562	1.651	1.638	.074	.005	97768-S
1-5/8	1.741	1.716	.064	.060	.129	.121	.49	.34	.010	.005	.017	.004	1.625	1.714	1.700	.074	.005	97769-S
1-11/16	1.805	1.779	.064	.060	.129	.121	.49	.35	.010	.005	.018	.004	1.688	1.776	1.762	.074	.005	97770-S
1-3/4	1.869	1.842	.064	.060	.129	.121	.50	.35	.010	.005	.018	.004	1.750	1.839	1.825	.074	.005	97771-S
1-13/16	1.933	1.906	.064	.060	.129	.121	.50	.35	.010	.005	.019	.004	1.812	1.903	1.888	.074	.005	97772-S
1-7/8	1.997	1.969	.064	.060	.129	.121	.51	.36	.010	.005	.020	.004	1.875	1.965	1.950	.074	.005	97773-S
1-15/16	2.061	2.032	.064	.060	.129	.121	.51	.36	.010	.005	.020	.004	1.938	2.028	2.012	.074	.005	97774-S
2	2.125	2.095	.064	.060	.129	.121	.52	.36	.010	.005	.021	.004	2.000	2.090	2.075	.074	.005	97775-S
2-1/16	2.189	2.158	.064	.060	.129	.121	.52	.36	.010	.005	.022	.004	2.062	2.154	2.138	.074	.005	97776-S
2-1/8	2.253	2.221	.064	.060	.129	.121	.53	.36	.010	.005	.022	.004	2.125	2.216	2.200	.074	.005	97777-S
2-3/16	2.317	2.284	.064	.060	.129	.121	.53	.36	.010	.005	.023	.004	2.188	2.278	2.262	.074	.005	97778-S
2-1/4	2.381	2.348	.064	.060	.129	.121	.57	.39	.010	.005	.023	.004	2.250	2.342	2.325	.074	.005	97779-S
2-5/16	2.445	2.411	.064	.060	.129	.121	.57	.39	.010	.005	.024	.004	2.312	2.405	2.388	.074	.005	97780-S
2-3/8	2.509	2.474	.064	.060	.129	.121	.58	.39	.010	.005	.025	.004	2.375	2.467	2.450	.074	.005	97781-S
2-7/16	2.573	2.537	.064	.060	.129	.121	.58	.39	.010	.005	.025	.004	2.438	2.530	2.512	.074	.005	97782-S
2-1/2	2.656	2.619	.080	.076	.160	.152	.65	.45	.017	.007	.026	.005	2.500	2.612	2.594	.092	.007	97783-S
2-9/16	2.720	2.682	.080	.076	.160	.152	.65	.45	.017	.007	.027	.005	2.562	2.674	2.656	.092	.007	97784-S
2-5/8	2.784	2.745	.080	.076	.160	.152	.66	.45	.017	.007	.027	.005	2.625	2.738	2.719	.092	.007	97785-S
2-11/16	2.848	2.808	.080	.076	.160	.152	.66	.46	.017	.007	.028	.005	2.688	2.800	2.781	.092	.007	97786-S
2-3/4	2.912	2.871	.080	.076	.160	.152	.67	.46	.017	.007	.029	.005	2.750	2.863	2.844	.092	.007	97787-S
2-13/16	2.976	2.934	.080	.076	.160	.152	.67	.46	.017	.007	.029	.005	2.812	2.926	2.906	.092	.007	97788-S
2-7/8	3.060	3.017	.097	.091	.193	.183	.74	.52	.019	.009	.030	.006	2.875	3.008	2.988	.112	.009	97789-S
2-15/16	3.124	3.080	.097	.091	.193	.183	.74	.52	.019	.009	.031	.006	2.938	3.070	3.050	.112	.009	97790-S
3	3.188	3.143	.097	.091	.193	.183	.75	.53	.019	.009	.031	.006	3.000	3.134	3.113	.112	.009	97791-S
3-1/16	3.252	3.206	.097	.091	.193	.183	.75	.53	.019	.009	.032	.006	3.062	3.196	3.175	.112	.009	97792-S
3-1/8	3.316	3.269	.097	.091	.193	.183	.76	.53	.019	.009	.033	.006	3.125	3.259	3.238	.112	.009	97793-S
3-3/16	3.380	3.332	.097	.091	.193	.183	.76	.53	.019	.009	.033	.006	3.188	3.322	3.300	.112	.009	97794-S
3-1/4	3.444	3.395	.097	.091	.193	.183	.77	.53	.019	.009	.034	.006	3.250	3.385	3.363	.112	.009	97795-S
3-5/16	3.508	3.458	.097	.091	.193	.183	.77	.54	.019	.009	.035	.006	3.312	3.447	3.425	.112	.009	97796-S
3-3/8	3.572	3.522	.097	.091	.193	.183	.78	.54	.019	.009	.035	.006	3.375	3.511	3.488	.112	.009	97797-S
3-7/16	3.636	3.585	.097	.091	.193	.183	.78	.54	.019	.009	.036	.006	3.438	3.573	3.550	.112	.009	97798-S
3-1/2	3.700	3.648	.097	.091	.193	.183	.79	.54	.019	.009	.036	.006	3.500	3.636	3.613	.112	.009	97799-S
3-9/16	3.764	3.711	.097	.091	.193	.183	.79	.54	.019	.009	.037	.006	3.562	3.699	3.675	.112	.009	97800-S
3-5/8	3.847	3.793	.112	.106	.224	.214	.85	.61	.021	.011	.038	.007	3.625	3.780	3.756	.129	.011	97801-S
3-11/16	3.911	3.856	.112	.106	.224	.214	.86	.61	.021	.011	.039	.007	3.688	3.843	3.819	.129	.011	97802-S
3-3/4	3.975	3.919	.112	.106	.224	.214	.86	.61	.021	.011	.039	.007	3.750	3.906	3.881	.129	.011	97803-S
3-13/16	4.039	3.982	.112	.106	.224	.214	.87	.61	.021	.011	.040	.007	3.812	3.969	3.944	.129	.011	97804-S
3-7/8	4.103	4.045	.112	.106	.224	.214	.90	.63	.021	.011	.040	.007	3.875	4.031	4.006	.129	.011	97805-S
3-15/16	4.167	4.108	.112	.106	.224	.214	.91	.63	.021	.011	.041	.007	3.938	4.095	4.069	.129	.011	97806-S
4	4.231	4.171	.112	.106	.224	.214	.91	.63	.021	.011	.042	.007	4.000	4.157	4.131	.129	.011	97807-S
4-1/8	4.378	4.316	.128	.122	.255	.245	.98	.69	.024	.014	.043	.008	4.125	4.302	4.275	.147	.014	97808-S
4-1/4	4.506	4.442	.128	.122	.255	.245	.99	.70	.024	.014	.044	.008	4.250	4.427	4.400	.147	.014	97809-S
4-3/8	4.634	4.569	.128	.122	.255	.245	1.00	.70	.024	.014	.046	.008	4.375	4.553	4.525	.147	.014	97810-S
4-1/2	4.762	4.695	.128	.122	.255	.245	1.01	.71	.024	.014	.047	.008	4.500	4.678	4.650	.147	.014	97811-S
4-5/8	4.891	4.821	.128	.122	.255	.245	1.02	.71	.024	.014	.048	.008	4.625	4.804	4.775	.147	.014	97812-S
4-3/4	5.019	4.948	.128	.122	.255	.245	1.03	.72	.024	.014	.049	.008	4.750	4.930	4.900	.147	.014	97813-S
4-7/8	5.147	5.074	.128	.122	.255	.245	1.04	.72	.024	.014	.051	.008	4.875	5.055	5.025	.147	.014	97814-S
5	5.294	5.219	.144	.138	.286	.276	1.14	.78	.026	.016	.052	.008	5.000	5.200	5.169	.166	.016	97815-S

MATERIAL: SAE 1060-1090 Steel. Rockwell C-42-53. For General Specifications see page K-950.03. For Finishes see Addendum.
Preferred order of Recommended Finishes: S2-S7-S8-S36 *Tolerance ±.003. Surfaces "L" must be parallel within "P".

FORD MOTOR COMPANY
STANDARD PARTS

RETAINING RINGS - TYPE HB — INTERNAL

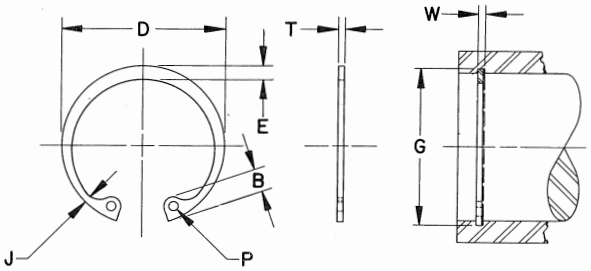

NOMINAL HOUSING DIAMETER	RETAINER DIMENSIONS												GROOVE DIMENSIONS				FORD PART NUMBERS
	D FREE OUTSIDE DIAMETER		T MATERIAL THICKNESS		E LARGE SECTION		J SMALL SECTION		B LUG HEIGHT		P HOLE DIAMETER		G GROOVE DIAMETER		W GROOVE WIDTH		
	MAX	MIN	MAX	MIN	MAX	MIN	MAX	MIN	MAX	MIN	MAX	MIN	MAX	MIN	MAX	MIN	
1/4	.290	.275	.017	.013	.027	.023	.017	.013	.068	.062	.041	.029	.269	.267	.020	.018	97603-S
5/16	.356	.341	.017	.013	.035	.031	.020	.016	.069	.063	.041	.029	.331	.329	.020	.018	97604-S
3/8	.425	.410	.027	.023	.043	.037	.031	.025	.085	.079	.051	.039	.399	.395	.032	.029	97605-S
7/16	.492	.477	.027	.023	.052	.046	.032	.026	.101	.095	.051	.039	.463	.459	.032	.029	97606-S
1/2	.558	.543	.037	.033	.057	.049	.039	.031	.117	.111	.057	.045	.532	.528	.042	.039	97607-S
9/16	.630	.615	.037	.033	.057	.049	.039	.031	.137	.127	.057	.045	.598	.594	.042	.039	97608-S
5/8	.704	.689	.037	.033	.064	.056	.039	.031	.137	.127	.072	.060	.667	.663	.042	.039	97609-S
11/16	.773	.758	.037	.033	.067	.059	.040	.032	.137	.127	.072	.060	.734	.730	.042	.039	97610-S
3/4	.841	.826	.037	.033	.074	.066	.044	.036	.147	.137	.072	.060	.798	.794	.042	.039	97611-S
13/16	.916	.891	.044	.040	.082	.072	.049	.039	.160	.150	.072	.060	.865	.859	.049	.046	97612-S
7/8	.986	.961	.044	.040	.089	.079	.050	.040	.160	.150	.072	.060	.934	.928	.049	.046	97613-S
15/16	1.056	1.031	.044	.040	.096	.086	.055	.045	.160	.150	.072	.060	1.003	.997	.049	.046	97614-S
1	1.091	1.076	.044	.040	.101	.091	.057	.047	.160	.150	.072	.060	1.069	1.063	.049	.046	97615-S
1-1/16	1.165	1.140	.052	.048	.107	.095	.061	.049	.185	.175	.093	.076	1.134	1.126	.060	.056	97616-S
1-1/8	1.232	1.207	.052	.048	.111	.099	.062	.050	.185	.175	.093	.076	1.201	1.193	.060	.056	97617-S
1-3/16	1.298	1.273	.052	.048	.118	.106	.065	.053	.185	.175	.093	.076	1.266	1.258	.060	.056	97618-S
1-1/4	1.366	1.341	.052	.048	.120	.108	.065	.053	.185	.175	.093	.076	1.334	1.326	.060	.056	97619-S
1-5/16	1.433	1.408	.052	.048	.126	.114	.067	.055	.185	.175	.093	.076	1.400	1.392	.060	.056	97620-S
1-3/8	1.501	1.476	.052	.048	.130	.118	.069	.057	.185	.175	.093	.076	1.465	1.457	.060	.056	97621-S
1-7/16	1.567	1.542	.052	.048	.132	.120	.071	.059	.185	.175	.093	.076	1.532	1.524	.060	.056	97622-S
1-1/2	1.637	1.612	.052	.048	.136	.124	.071	.059	.185	.175	.093	.076	1.598	1.590	.060	.056	97623-S
1-9/16	1.759	1.714	.065	.059	.145	.131	.077	.063	.207	.197	.093	.076	1.663	1.653	.072	.068	97624-S
1-5/8	1.776	1.743	.065	.059	.153	.139	.083	.069	.232	.222	.093	.076	1.730	1.720	.072	.068	97625-S
1-11/16	1.843	1.810	.065	.059	.152	.138	.078	.064	.232	.222	.093	.076	1.797	1.787	.072	.068	97626-S
1-3/4	1.967	1.922	.065	.059	.157	.143	.082	.068	.239	.229	.093	.076	1.863	1.853	.072	.068	97627-S
1-13/16	1.978	1.945	.065	.059	.154	.140	.080	.066	.239	.229	.108	.091	1.927	1.917	.072	.068	97628-S
1-7/8	2.045	2.012	.065	.059	.157	.143	.081	.067	.239	.229	.108	.091	1.994	1.984	.072	.068	97629-S
1-15/16	2.115	2.082	.065	.059	.162	.148	.083	.069	.239	.229	.108	.091	2.061	2.051	.072	.068	97630-S
2	2.180	2.147	.065	.059	.172	.158	.089	.075	.245	.235	.108	.091	2.127	2.117	.072	.068	97631-S
2-1/16	2.250	2.210	.081	.075	.178	.164	.092	.078	.255	.245	.109	.092	2.192	2.180	.091	.086	97632-S
2-1/8	2.320	2.280	.081	.075	.180	.166	.092	.078	.265	.255	.108	.091	2.257	2.245	.091	.086	97633-S
2-3/16	2.390	2.350	.081	.075	.186	.172	.096	.082	.269	.259	.108	.091	2.324	2.312	.091	.086	97634-S
2-1/4	2.460	2.420	.081	.075	.187	.173	.097	.083	.275	.265	.108	.091	2.388	2.376	.091	.086	97635-S
2-5/16	2.525	2.485	.081	.075	.199	.185	.102	.088	.275	.265	.108	.091	2.456	2.444	.091	.086	97636-S
2-3/8	2.592	2.552	.081	.075	.202	.188	.103	.089	.275	.265	.108	.091	2.523	2.511	.091	.086	97637-S
2-7/16	2.659	2.619	.081	.075	.208	.194	.105	.091	.285	.275	.125	.108	2.590	2.578	.091	.086	97638-S
2-1/2	2.725	2.685	.081	.075	.211	.197	.113	.099	.285	.275	.125	.108	2.654	2.642	.091	.086	97639-S
2-17/32	2.758	2.718	.081	.075	.212	.198	.108	.094	.285	.275	.125	.108	2.687	2.675	.091	.086	97640-S
2-9/16	2.790	2.740	.096	.090	.214	.200	.111	.097	.295	.285	.125	.108	2.720	2.708	.108	.103	97641-S
2-5/8	2.870	2.820	.096	.090	.217	.203	.112	.098	.295	.285	.125	.108	2.787	2.775	.108	.103	97642-S
2-11/16	2.937	2.887	.096	.090	.225	.211	.113	.099	.305	.295	.125	.108	2.854	2.842	.108	.103	97643-S
2-3/4	3.005	2.955	.096	.090	.232	.218	.115	.101	.305	.295	.125	.108	2.920	2.908	.108	.103	97644-S
2-13/16	3.161	3.091	.096	.090	.237	.223	.122	.108	.305	.295	.125	.108	2.986	2.974	.108	.103	97645-S
2-7/8	3.231	3.161	.096	.090	.247	.233	.127	.113	.315	.305	.125	.108	3.057	3.045	.108	.103	97646-S
3	3.275	3.225	.096	.090	.256	.242	.128	.114	.315	.305	.125	.108	3.188	3.176	.108	.103	97647-S

MATERIAL: SAE 1065 - 1090 Steel
Preferred Order of Recommended Finishes: S2 - S7 - S8 - S36
Sizes 1/4 thru 15/16 also 1-9/16, 1-3/4, 2-13/16 and 2-7/8 are prestressed.
For General Specifications see page K-950.03. For Finishes see Addendum.

FORD MOTOR COMPANY
STANDARD PARTS

RETAINING RINGS-TYPE HI — INTERNAL

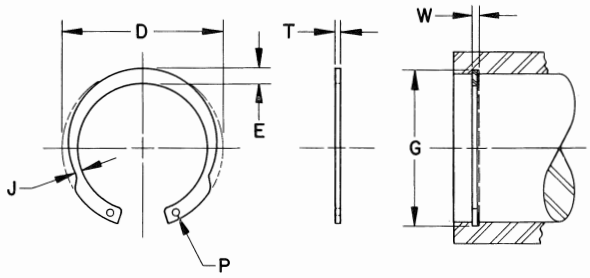

NOMINAL HOUSING DIAMETER	RETAINER DIMENSIONS										GROOVE DIMENSIONS				FORD PART NUMBERS
	D FREE OUTSIDE DIAMETER		T MATERIAL THICKNESS		E LARGE SECTION		J SMALL SECTION		P HOLE DIAMETER		G GROOVE DIAMETER		W GROOVE WIDTH		
	MAX	MIN	MAX	MIN	MAX	MIN	MAX	MIN	MAX	MIN	MAX	MIN	MAX	MIN	
3/4	.818	.803	.037	.033	.089	.081	.046	.038	.052	.040	.798	.794	.042	.039	97419-S
13/16	.887	.872	.044	.040	.097	.087	.049	.039	.052	.040	.865	.859	.049	.046	97420-S
7/8	.954	.939	.044	.040	.104	.094	.052	.042	.052	.040	.934	.928	.049	.046	97421-S
15/16	1.025	1.010	.044	.040	.111	.101	.056	.046	.052	.040	1.003	.997	.049	.046	97422-S
1	1.091	1.076	.044	.040	.118	.108	.059	.049	.052	.040	1.069	1.063	.049	.046	97423-S
1-1/16	1.165	1.140	.052	.048	.126	.114	.063	.051	.060	.048	1.134	1.126	.060	.056	97424-S
1-1/8	1.232	1.207	.052	.048	.129	.117	.065	.053	.060	.048	1.201	1.193	.060	.056	97425-S
1-3/16	1.298	1.273	.052	.048	.132	.120	.066	.054	.060	.048	1.266	1.258	.060	.056	97426-S
1-1/4	1.366	1.341	.052	.048	.135	.123	.067	.055	.060	.048	1.334	1.326	.060	.056	97427-S
1-5/16	1.433	1.408	.052	.048	.138	.126	.069	.057	.060	.048	1.400	1.392	.060	.056	97428-S
1-3/8	1.501	1.476	.052	.048	.141	.129	.071	.059	.060	.048	1.465	1.457	.060	.056	97429-S
1-7/16	1.567	1.542	.052	.048	.150	.138	.075	.063	.091	.074	1.532	1.524	.060	.056	97430-S
1-1/2	1.637	1.612	.052	.048	.154	.142	.076	.064	.091	.074	1.598	1.590	.060	.056	97431-S
1-9/16	1.708	1.675	.065	.059	.165	.151	.081	.067	.091	.074	1.663	1.653	.072	.068	97432-S
1-5/8	1.776	1.743	.065	.059	.169	.155	.084	.070	.091	.074	1.730	1.720	.072	.068	97433-S
1-11/16	1.843	1.810	.065	.059	.173	.159	.086	.072	.091	.074	1.797	1.787	.072	.068	97434-S
1-3/4	1.911	1.878	.065	.059	.177	.163	.089	.075	.091	.074	1.863	1.853	.072	.068	97435-S
1-13/16	1.978	1.945	.065	.059	.185	.171	.091	.077	.091	.074	1.927	1.917	.072	.068	97436-S
1-7/8	2.045	2.012	.065	.059	.195	.181	.097	.083	.091	.074	1.994	1.984	.072	.068	97437-S
2	2.180	2.147	.065	.059	.215	.201.	.107	.093	.091	.074	2.127	1.117	.072	.068	97438-S
2-1/16	2.249	2.209	.081	.075	.225	.211	.113	.099	.109	.092	2.192	2.180	.091	.086	97439-S
2-1/8	2.320	2.280	.081	.075	.230	.216	.115	.101	.109	.092	2.257	2.245	.091	.086	97440-S
2-3/16	2.390	2.350	.081	.075	.235	.221	.116	.102	.109	.092	2.324	2.312	.091	.086	97441-S
2-1/4.	2.460	2.420	.081	.075	.240	.226	.118	.104	.109	.092	2.388	2.376	.091	.086	97442-S
2-5/16	2.525	2.485	.081	.075	.245	.231	.120	.106	.109	.092	2.456	2.444	.091	.086	97443-S
2-3/8	2.592	2.552	.081	.075	.250	.236	.122	.108	.109	.092	2.523	2.511	.091	.086	97444-S
2-7/16	2.659	2.619	.081	.075	.255	.241	.124	.110	.109	.092	2.590	2.578	.091	.086.	97445-S
2-1/2	2.725	2.685	.081	.075	.261	.247	.127	.113	.109	.092	2.654	2.642	.091	.086	97446-S
2-5/8	2.870	2.820	.096	.090	.273	.259	.135	.121	.124	.107	2.787	2.775	.108	.103	97447-S
2-3/4	3.005	2.955	.096	.090	.285	.271	.141	.127	.124	.107	2.920	2.908	.108	.103	97448-S
2-13/16	3.093	3.043	.096	.090	.293	.279	.146	.132	.124	.107	2.986	2.974	.108	.103	97449-S
2-7/8	3.135	3.085	.096	.090	.297	.283	.146	.132	.124	.107	3.057	3.045	.108	.103	97450-S
3	3.275	3.225	.096	.090	.309	.295	.150	.136	.124	.107	3.188	3.176	.108	.103	97451-S
3-5/32	3.438	3.388	.112	.106	.322	.306	.157	.141	.140	.123	3.354	3.342	.125	.120	97452-S
3-1/4	3.539	3.489	.112	.106	.326	.310	.159	.143	.140	.123	3.452	3.440	.125	.120	97453-S
3-11/32	3.641	3.591	.112	.106	.329	.313	.163	.147	.140	.123	3.552	3.540	.125	.120	97454-S
3-1/2	3.810	3.760	.112	.106	.332	.316	.162	.146	.140	.123	3.716	3.704	.125	.120	97455-S
3-9/16	3.880	3.830	.112	.106	.334	.318	.163	.147	.140	.123	3.782	3.770	.125	.120	97456-S
3-3/4	4.090	4.040	.112	.106	.339	.323	.165	.149	.140	.123	3.980	3.968	.125	.120	97457-S
3-7/8	4.235	4.185	.112	.106	.341	.325	.167	.151	.140	.123	4.113	4.101	.125	.120	97458-S
4	4.380	4.330	.112	.106	.346	.330	.169	.153	.140	.123	4.246	4.234	.125	.120	97459-S

MATERIAL: SAE 1065 - 1090 Steel
Preferred Order of Recommended Finishes: S2-S7-S8-S36
For General Specifications see page K-950.03. For Finishes see Addendum.

FORD MOTOR COMPANY
STANDARD PARTS

RETAINING RINGS-TYPE HD — INTERNAL

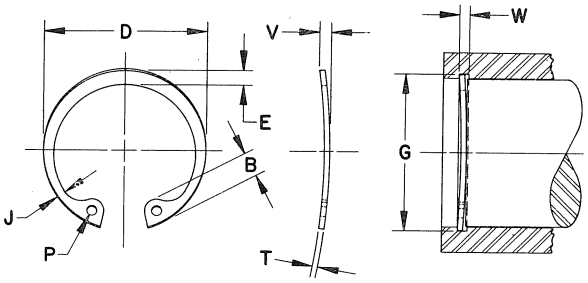

NOMINAL HOUSING DIAMETER	RETAINER DIMENSIONS														GROOVE DIMENSIONS				FORD PART NUMBERS
	D FREE OUTSIDE DIAMETER		V OVERALL BOW HEIGHT		T MATERIAL THICKNESS		E LARGE SECTION		J SMALL SECTION		B LUG HEIGHT		P HOLE DIAMETER		G GROOVE DIAMETER		W GROOVE WIDTH		
	MAX	MIN	MAX	MIN	MAX	MIN	MAX	MIN	MAX	MIN	MAX	MIN	MAX	MIN	MAX	MIN	MAX	MIN	
1/4	.290	.270	.042	.030	.017	.013	.027	.023	.017	.013	.066	.060	.041	.029	.269	.267	.032	.030	97677-S
5/16	.356	.336	.042	.030	.017	.013	.035	.031	.020	.016	.069	.063	.041	.029	.331	.329	.032	.030	97678-S
3/8	.425	.405	.053	.041	.027	.023	.043	.037	.031	.025	.085	.079	.051	.039	.399	.395	.043	.040	97679-S
7/16	.492	.472	.053	.041	.027	.023	.052	.046	.032	.026	.101	.095	.051	.039	.463	.459	.043	.040	97680-S
1/2	.558	.538	.070	.056	.037	.033	.057	.049	.039	.031	.117	.111	.057	.045	.532	.528	.058	.055	97681-S
9/16	.630	.610	.070	.056	.037	.033	.057	.049	.039	.031	.137	.127	.057	.045	.598	.594	.058	.055	97682-S
5/8	.704	.684	.070	.056	.037	.033	.064	.056	.039	.031	.137	.127	.072	.060	.667	.663	.058	.055	97683-S
11/16	.773	.753	.070	.056	.037	.033	.067	.059	.040	.032	.137	.127	.072	.060	.734	.730	.058	.055	97684-S
3/4	.841	.821	.070	.056	.037	.033	.074	.066	.044	.036	.147	.137	.072	.060	.798	.794	.058	.055	97685-S
13/16	.916	.886	.081	.065	.044	.040	.082	.072	.049	.039	.160	.150	.072	.060	.865	.859	.065	.062	97686-S
7/8	.986	.956	.081	.065	.044	.040	.089	.079	.050	.040	.160	.150	.072	.060	.934	.928	.065	.062	97687-S
15/16	1.056	1.026	.081	.065	.044	.040	.096	.086	.055	.045	.160	.150	.072	.060	1.003	.997	.065	.062	97688-S
1	1.091	1.076	.081	.065	.044	.040	.101	.091	.057	.047	.160	.150	.072	.060	1.069	1.063	.065	.062	97689-S
1-1/16	1.165	1.140	.097	.073	.052	.048	.107	.095	.061	.049	.185	.175	.093	.076	1.134	1.126	.073	.070	97690-S
1-1/8	1.232	1.207	.097	.073	.052	.048	.111	.099	.062	.050	.185	.175	.093	.076	1.201	1.193	.073	.070	97691-S
1-3/16	1.298	1.273	.097	.073	.052	.048	.118	.106	.065	.053	.185	.175	.093	.076	1.266	1.258	.073	.070	97692-S
1-1/4	1.366	1.341	.097	.073	.052	.048	.120	.108	.065	.053	.185	.175	.093	.076	1.334	1.326	.073	.070	97693-S
1-5/16	1.433	1.408	.097	.073	.052	.048	.126	.114	.067	.055	.185	.175	.093	.076	1.400	1.392	.073	.070	97694-S
1-3/8	1.501	1.476	.097	.073	.052	.048	.130	.118	.069	.057	.185	.175	.093	.076	1.465	1.457	.073	.070	97695-S
1-7/16	1.567	1.542	.097	.073	.052	.048	.132	.120	.071	.059	.185	.175	.093	.076	1.532	1.524	.073	.070	97696-S
1-1/2	1.637	1.612	.097	.073	.052	.048	.136	.124	.071	.059	.185	.175	.093	.076	1.598	1.590	.073	.070	97697-S

MATERIAL: SAE 1065 - 1090 Steel
Preferred Order of Recommended Finishes: S2 - S7 - S8 - S36
Sizes 1/4 thru 15/16 are prestressed.
For General Specifications see page K-950.03. For Finishes see Addendum.

FORD MOTOR COMPANY
STANDARD PARTS

RETAINING RINGS — EXTERNAL

TYPE SU

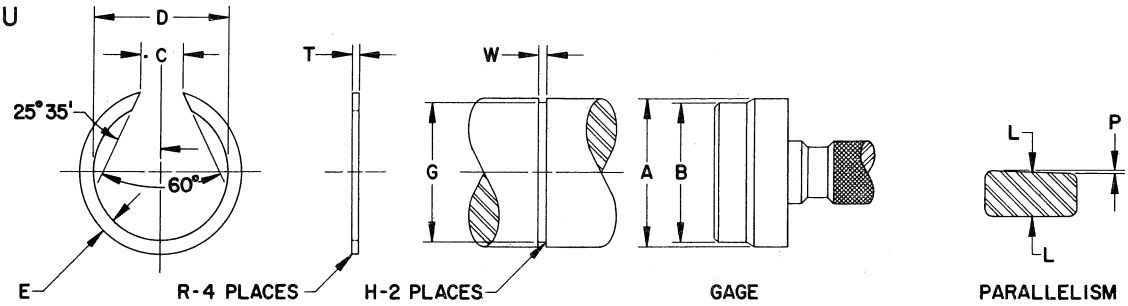

(See Note)

NOMINAL SHAFT DIAMETER	RETAINER DIMENSIONS												GAGE		SHAFT			FORD PART NUMBERS
	D FREE INSIDE DIAMETER		T SECTION THICKNESS		E SECTION WIDTH		C GAP		R RADIUS		RADIAL DEFORMATION	P PARALLELISM	A DIA.	B DIA.	G REC. GROOVE DIA.	W REC. GROOVE WIDTH	H GROOVE RADIUS	
	MAX	MIN	MAX	MIN	MAX	MIN	MAX	MIN	MAX	MIN	MAX	MAX	+.001 -.000	+.000 -.001	±.005	MIN	MAX	
7/8	.810	.795	.049	.045	.082	.074	.37	.19	.010	.005	.009	.002	.875	.814	.828*	.056	.005	97698-S
15/16	.867	.852	.049	.045	.082	.074	.37	.19	.010	.005	.010	.002	.938	.871	.891*	.056	.005	97699-S
1	.929	.909	.049	.045	.098	.090	.37	.19	.010	.005	.011	.003	1.000	.934	.944	.056	.005	97700-S
1-1/16	.986	.966	.049	.045	.098	.090	.37	.19	.010	.005	.011	.003	1.062	.991	1.006	.056	.005	97701-S
1-1/8	1.042	1.022	.049	.045	.098	.090	.37	.19	.010	.005	.012	.003	1.125	1.047	1.069	.056	.005	97702-S
1-3/16	1.098	1.078	.049	.045	.098	.090	.37	.19	.010	.005	.013	.003	1.188	1.104	1.131	.056	.005	97703-S
1-1/4	1.165	1.134	.049	.045	.098	.090	.43	.19	.010	.005	.013	.003	1.250	1.171	1.194	.056	.005	97704-S
1-5/16	1.222	1.191	.049	.045	.098	.090	.43	.19	.010	.005	.014	.003	1.312	1.228	1.256	.056	.005	97705-S
1-3/8	1.278	1.247	.049	.045	.098	.090	.43	.19	.010	.005	.014	.003	1.375	1.284	1.319	.056	.005	97706-S
1-7/16	1.334	1.303	.049	.045	.098	.090	.43	.19	.010	.005	.015	.003	1.438	1.340	1.381	.056	.005	97707-S
1-1/2	1.393	1.362	.064	.060	.129	.121	.43	.19	.010	.005	.016	.004	1.500	1.400	1.425	.074	.005	97708-S
1-9/16	1.450	1.419	.064	.060	.129	.121	.43	.19	.010	.005	.017	.004	1.562	1.457	1.488	.074	.005	97709-S
1-5/8	1.506	1.475	.064	.060	.129	.121	.43	.19	.010	.005	.017	.004	1.625	1.513	1.550	.074	.005	97710-S
1-11/16	1.562	1.531	.064	.060	.129	.121	.43	.19	.010	.005	.018	.004	1.688	1.570	1.612	.074	.005	97711-S
1-3/4	1.619	1.588	.064	.060	.129	.121	.43	.19	.010	.005	.018	.004	1.750	1.627	1.675	.074	.005	97712-S
1-13/16	1.675	1.644	.064	.060	.129	.121	.43	.19	.010	.005	.019	.004	1.812	1.683	1.738	.074	.005	97713-S
1-7/8	1.731	1.700	.064	.060	.129	.121	.43	.19	.010	.005	.019	.004	1.875	1.740	1.800	.074	.005	97714-S
1-15/16	1.787	1.756	.064	.060	.129	.121	.43	.19	.010	.005	.020	.004	1.938	1.796	1.862	.074	.005	97715-S
2	1.843	1.812	.064	.060	.129	.121	.43	.19	.010	.005	.021	.004	2.000	1.852	1.925	.074	.005	97716-S
2-1/16	1.900	1.869	.064	.060	.129	.121	.43	.19	.010	.005	.021	.004	2.062	1.909	1.988	.074	.005	97717-S
2-1/8	1.956	1.925	.064	.060	.129	.121	.43	.19	.010	.005	.022	.004	2.125	1.966	2.050	.074	.005	97718-S
2-3/16	2.012	1.981	.064	.060	.129	.121	.43	.19	.010	.005	.022	.004	2.188	2.022	2.112	.074	.005	97719-S
2-1/4	2.069	2.038	.064	.060	.129	.121	.43	.19	.010	.005	.023	.004	2.250	2.079	2.175	.074	.005	97720-S
2-5/16	2.125	2.094	.064	.060	.129	.121	.43	.19	.010	.005	.023	.004	2.312	2.135	2.238	.074	.005	97721-S
2-3/8	2.181	2.150	.064	.060	.129	.121	.43	.19	.010	.005	.024	.004	2.375	2.192	2.300	.074	.005	97722-S
2-7/16	2.237	2.206	.064	.060	.129	.121	.43	.19	.010	.005	.024	.004	2.438	2.248	2.362	.074	.005	97723-S
2-1/2	2.328	2.266	.080	.076	.160	.152	.57	.19	.017	.007	.026	.005	2.500	2.339	2.406	.092	.007	97724-S
2-9/16	2.384	2.322	.080	.076	.160	.152	.57	.19	.017	.007	.026	.005	2.562	2.396	2.469	.092	.007	97725-S
2-5/8	2.440	2.378	.080	.076	.160	.152	.57	.19	.017	.007	.027	.005	2.625	2.452	2.531	.092	.007	97726-S
2-11/16	2.496	2.434	.080	.076	.160	.152	.57	.19	.017	.007	.027	.005	2.688	2.508	2.594	.092	.007	97727-S
2-3/4.	2.553	2.491	.080	.076	.160	.152	.57	.19	.017	.007	.028	.005	2.750	2.565	2.656	.092	.007	97728-S
2-13/16	2.609	2.547	.080	.076	.160	.152	.57	.19	.017	.007	.029	.005	2.812	2.622	2.719	.092	.007	97729-S
2-7/8	2.668	2.606	.097	.091	.193	.183	.57	.19	.019	.009	.030	.006	2.875	2.681	2.762	.112	.009	97730-S
2-15/16	2.724	2.662	.097	.091	.193	.183	.57	.19	.019	.009	.030	.006	2.938	2.737	2.825	.112	.009	97731-S
3	2.781	2.719	.097	.091	.193	.183	.57	.19	.019	.009	.031	.006	3.000	2.795	2.887	.112	.009	97732-S
3-1/16	2.837	2.775	.097	.091	.193	.183	.57	.19	.019	.009	.031	.006	3.062	2.851	2.950	.112	.009	97733-S
3-1/8	2.893	2.831	.097	.091	.193	.183	.57	.19	.019	.009	.032	.006	3.125	2.907	3.012	.112	.009	97734-S
3-3/16	2.950	2.888	.097	.091	.193	.183	.57	.19	.019	.009	.033	.006	3.188	2.964	3.075	.112	.009	97735-S
3-1/4	3.006	2.944	.097	.091	.193	.183	.57	.19	.019	.009	.033	.006	3.250	3.021	3.137	.112	.009	97736-S
3-5/16	3.062	3.000	.097	.091	.193	.183	.57	.19	.019	.009	.034	.006	3.312	3.077	3.200	.112	.009	97737-S
3-3/8	3.118	3.056	.097	.091	.193	.183	.57	.19	.019	.009	.034	.006	3.375	3.133	3.262	.112	.009	97738-S
3-7/16	3.174	3.112	.097	.091	.193	.183	.57	.19	.019	.009	.035	.006	3.438	3.190	3.325	.112	.009	97739-S
3-1/2	3.231	3.169	.097	.091	.193	.183	.57	.19	.019	.009	.035	.006	3.500	3.247	3.387	.112	.009	97740-S
3-9/16	3.287	3.225	.097	.091	.193	.183	.57	.19	.019	.009	.036	.006	3.562	3.303	3.450	.112	.009	97741-S
3-5/8	3.346	3.284	.112	.106	.224	.214	.57	.19	.021	.011	.037	.007	3.625	3.362	3.494	.129	.011	97742-S
3-11/16	3.403	3.341	.112	.106	.224	.214	.57	.19	.021	.011	.038	.007	3.688	3.420	3.556	.129	.011	97743-S
3-3/4	3.459	3.397	.112	.106	.224	.214	.57	.19	.021	.011	.038	.007	3.750	3.476	3.619	.129	.011	97744-S
3-13/16	3.515	3.453	.112	.106	.224	.214	.57	.19	.021	.011	.039	.007	3.812	3.532	3.681	.129	.011	97745-S
3-7/8	3.571	3.509	.112	.106	.224	.214	.57	.19	.021	.011	.039	.007	3.875	3.589	3.744	.129	.011	97746-S
3-15/16	3.628	3.566	.112	.106	.224	.214	.57	.19	.021	.011	.040	.007	3.938	3.646	3.806	.129	.011	97747-S
4	3.684	3.622	.112	.106	.224	.214	.57	.19	.021	.011	.040	.007	4.000	3.702	3.869	.129	.011	97748-S
4-1/8	3.800	3.738	.128	.122	.255	.245	.57	.19	.024	.014	.042	.008	4.125	3.819	3.975	.147	.014	97749-S
4-1/4	3.912	3.850	.128	.122	.255	.245	.57	.19	.024	.014	.043	.008	4.250	3.931	4.100	.147	.014	97750-S
4-3/8	4.024	3.962	.128	.122	.255	.245	.57	.19	.024	.014	.045	.008	4.375	4.044	4.225	.147	.014	97751-S
4-1/2	4.137	4.075	.128	.122	.255	.245	.57	.19	.024	.014	.046	.008	4.500	4.157	4.350	.147	.014	97752-S
4-5/8	4.250	4.188	.128	.122	.255	.245	.57	.19	.024	.014	.047	.008	4.625	4.271	4.475	.147	.014	97753-S
4-3/4	4.362	4.300	.128	.122	.255	.245	.57	.19	.024	.014	.048	.008	4.750	4.384	4.600	.147	.014	97754-S
4-7/8	4.474	4.412	.128	.122	.255	.245	.57	.19	.024	.014	.049	.008	4.875	4.496	4.725	.147	.014	97755-S
5	4.656	4.531	.160	.152	.318	.306	.75	.25	.028	.018	.051	.009	5.000	4.679	4.813	.184	.018	97756-S

MATERIAL: SAE 1060-1090 Steel. Rockwell C-42-53. For General Specifications see page K-950.03. For Finishes see Addendum.
Preferred Order of Recommended Finishes: S2-S7-S8-S36. *Tolerance ±.003. Surfaces "L" must be parallel within "P".

FORD MOTOR COMPANY
STANDARD PARTS

RINGS-RETAINING-TYPE SB — EXTERNAL

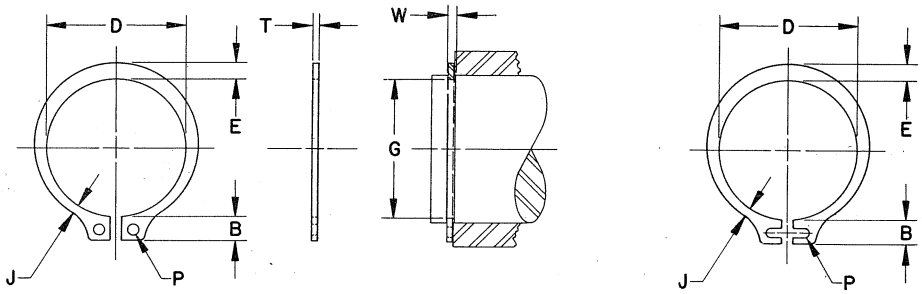

LUG DESIGN SIZES 1/8 THRU 7/32

NOMINAL SHAFT DIAMETER	RETAINER DIMENSIONS												GROOVE DIMENSIONS				FORD PART NUMBERS
	D FREE INSIDE DIAMETER		T MATERIAL THICKNESS		E LARGE SECTION		J SMALL SECTION		B LUG HEIGHT		P HOLE DIAMETER		G DIAMETER		W WIDTH		
	MAX	MIN	MAX	MIN	MAX	MIN	MAX	MIN	MAX	MIN	MAX	MIN	MAX	MIN	MAX	MIN	
1/8	.114	.108	.011	.009	.019	.016	.012	.009	.048	.044	.036	.024	.1185	.1155	.014	.012	97507-S
5/32	.144	.138	.011	.009	.027	.024	.017	.014	.056	.052	.036	.024	.1475	.1445	.014	.012	97508-S
3/16	.170	.164	.017	.013	.027	.023	.018	.014	.052	.048	.035	.023	.1765	.1735	.020	.018	97509-S
7/32	.198	.192	.017	.013	.030	.026	.019	.015	.058	.054	.036	.024	.2065	.2035	.020	.018	97510-S
1/4	.227	.221	.027	.023	.038	.032	.028	.022	.083	.077	.051	.039	.2315	.2285	.032	.029	97511-S
9/32	.258	.251	.027	.023	.041	.035	.028	.022	.083	.077	.051	.039	.263	.259	.032	.029	97512-S
5/16	.283	.276	.027	.023	.043	.037	.029	.023	.090	.084	.051	.039	.292	.288	.032	.029	97513-S
11/32	.311	.304	.027	.023	.045	.039	.029	.023	.090	.084	.051	.039	.323	.319	.032	.029	97514-S
3/8	.340	.333	.027	.023	.053	.047	.033	.027	.091	.085	.051	.039	.354	.350	.032	.029	97515-S
13/32	.368	.361	.027	.023	.057	.051	.036	.030	.090	.084	.051	.039	.384	.380	.032	.029	97516-S
7/16	.397	.390	.027	.023	.058	.052	.036	.030	.091	.085	.051	.039	.414	.410	.032	.029	97517-S
15/32	.430	.423	.027	.023	.063	.057	.038	.032	.091	.085	.051	.039	.445	.441	.032	.029	97518-S
1/2	.463	.456	.037	.033	.069	.061	.044	.036	.111	.105	.057	.045	.470	.466	.042	.039	97519-S
9/16	.526	.511	.037	.033	.076	.068	.045	.037	.111	.105	.057	.045	.532	.528	.042	.039	97520-S
19/32	.555	.540	.037	.033	.080	.072	.047	.039	.112	.106	.057	.045	.562	.556	.042	.039	97521-S
5/8	.584	.569	.037	.033	.084	.076	.049	.041	.113	.107	.057	.045	.591	.585	.042	.039	97522-S
11/16	.640	.625	.044	.040	.089	.079	.053	.043	.140	.132	.062	.050	.649	.643	.049	.046	97523-S
3/4	.698	.683	.044	.040	.097	.087	.056	.046	.140	.132	.062	.050	.707	.701	.049	.046	97524-S
25/32	.727	.712	.044	.040	.099	.089	.057	.047	.140	.132	.062	.050	.736	.730	.049	.046	97525-S
13/16	.756	.741	.044	.040	.101	.091	.059	.049	.140	.132	.062	.050	.765	.759	.049	.046	97526-S
7/8	.815	.800	.044	.040	.109	.099	.062	.052	.141	.133	.062	.050	.824	.818	.049	.046	97527-S
15/16	.872	.857	.044	.040	.115	.105	.068	.058	.170	.162	.093	.076	.885	.879	.049	.046	97528-S
1	.930	.915	.044	.040	.121	.111	.070	.060	.171	.163	.093	.076	.943	.937	.049	.046	97529-S
1-1/16	.992	.967	.052	.048	.128	.116	.075	.063	.185	.177	.093	.076	1.002	.994	.060	.056	97530-S
1-1/8	1.051	1.026	.052	.048	.134	.122	.077	.065	.186	.178	.093	.076	1.063	1.055	.060	.056	97531-S
1-3/16	1.108	1.083	.052	.048	.138	.126	.078	.066	.186	.178	.093	.076	1.122	1.114	.060	.056	97532-S
1-1/4	1.166	1.141	.052	.048	.146	.134	.082	.070	.187	.179	.093	.076	1.180	1.172	.060	.056	97533-S
1-5/16	1.224	1.199	.052	.048	.152	.140	.082	.070	.187	.179	.093	.076	1.236	1.228	.060	.056	97534-S
1-3/8	1.282	1.257	.052	.048	.158	.146	.088	.076	.188	.180	.093	.076	1.295	1.287	.060	.056	97535-S
1-7/16	1.343	1.318	.052	.048	.166	.154	.092	.080	.188	.180	.093	.076	1.354	1.346	.060	.056	97536-S
1-1/2	1.397	1.372	.052	.048	.174	.162	.097	.085	.218	.210	.135	.118	1.410	1.402	.060	.056	97537-S
1-9/16	1.459	1.426	.065	.059	.178	.166	.099	.087	.239	.231	.140	.123	1.473	1.463	.072	.068	97538-S
1-5/8	1.516	1.483	.065	.059	.186	.174	.103	.091	.239	.231	.140	.123	1.534	1.524	.072	.068	97539-S
1-11/16	1.573	1.540	.065	.059	.190	.178	.105	.093	.239	.231	.140	.123	1.594	1.584	.072	.068	97540-S
1-3/4	1.631	1.598	.065	.059	.194	.182	.107	.095	.241	.233	.140	.123	1.655	1.645	.072	.068	97541-S
1-13/16	1.688	1.655	.065	.059	.198	.186	.108	.096	.242	.234	.140	.123	1.713	1.703	.072	.068	97542-S
1-7/8	1.748	1.715	.065	.059	.202	.190	.110	.098	.243	.235	.140	.123	1.774	1.764	.072	.068	97543-S
1-31/32	1.832	1.799	.065	.059	.206	.194	.112	.100	.249	.241	.140	.123	1.862	1.852	.072	.068	97544-S
2	1.863	1.830	.065	.059	.210	.198	.114	.102	.243	.235	.140	.123	1.891	1.881	.072	.068	97545-S
2-1/16	1.921	1.881	.081	.075	.215	.201	.118	.104	.271	.261	.140	.123	1.952	1.940	.091	.086	97546-S
2-1/8	1.979	1.939	.081	.075	.219	.205	.120	.106	.271	.261	.140	.123	2.009	1.997	.091	.086	97547-S
2-5/32	2.008	1.968	.081	.075	.219	.205	.120	.106	.271	.261	.140	.123	2.038	2.026	.091	.086	97548-S
2-1/4	2.096	2.056	.081	.075	.227	.213	.123	.109	.272	.262	.140	.123	2.126	2.114	.091	.086	97549-S
2-5/16	2.154	2.114	.081	.075	.229	.215	.125	.111	.272	.262	.140	.123	2.184	2.172	.091	.086	97550-S
2-3/8	2.212	2.172	.081	.075	.231	.217	.126	.112	.272	.262	.140	.123	2.245	2.233	.091	.086	97551-S
2-7/16	2.270	2.230	.081	.075	.235	.221	.127	.113	.273	.263	.140	.123	2.305	2.293	.091	.086	97552-S
2-1/2	2.328	2.288	.081	.075	.239	.225	.129	.115	.273	.263	.140	.123	2.366	2.354	.091	.086	97553-S
2-5/8	2.448	2.398	.081	.075	.249	.235	.134	.120	.273	.263	.140	.123	2.487	2.475	.091	.086	97554-S
2-11/16	2.505	2.455	.081	.075	.253	.239	.136	.122	.273	.263	.140	.123	2.547	2.535	.091	.086	97555-S
2-3/4	2.563	2.513	.096	.090	.255	.241	.138	.124	.315	.305	.140	.123	2.608	2.596	.108	.103	97556-S
2-7/8	2.679	2.629	.096	.090	.263	.249	.140	.126	.313	.303	.140	.123	2.727	2.715	.108	.103	97557-S
2-15/16	2.737	2.687	.096	.090	.267	.253	.143	.129	.313	.303	.140	.123	2.785	2.773	.108	.103	97558-S
3	2.795	2.745	.096	.090	.271	.257	.145	.131	.313	.303	.140	.123	2.844	2.832	.108	.103	97559-S

MATERIAL: Sizes 1/8 thru 7/32 M-1567-C Copper. Others SAE 1065 - 1090 Steel.
Preferred Order of Recommended Finishes: S2 - S7 - S8 - S36
For General Specifications see page K-950.03. For Finishes see Addendum.

FORD MOTOR COMPANY
STANDARD PARTS

RETAINING RINGS-TYPE SI — EXTERNAL

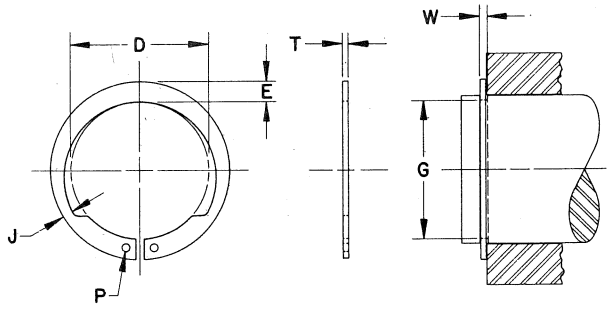

NOMINAL SHAFT DIAMETER	RETAINER DIMENSIONS										GROOVE DIMENSIONS				FORD PART NUMBERS
	D FREE INSIDE DIAMETER		T MATERIAL THICKNESS		E LARGE SECTION		J SMALL SECTION		P HOLE DIAMETER		G DIAMETER		W WIDTH		
	MAX	MIN	MAX	MIN	MAX	MIN	MAX	MIN	MAX	MIN	MAX	MIN	MAX	MIN	
1/2	.466	.451	.037	.033	.084	.076	.045	.037	.052	.040	.470	.466	.042	.039	97560-S
9/16	.526	.511	.037	.033	.092	.084	.047	.039	.052	.040	.532	.528	.042	.039	97561-S
19/32	.555	.540	.037	.033	.096	.088	.050	.042	.052	.040	.562	.556	.042	.039	97562-S
5/8	.584	.569	.037	.033	.100	.092	.052	.044	.052	.040	.591	.585	.042	.039	97563-S
11/16	.640	.625	.044	.040	.109	.099	.057	.047	.052	.040	.649	.643	.049	.046	97564-S
3/4	.698	.683	.044	.040	.117	.107	.061	.051	.052	.040	.707	.701	.049	.046	97565-S
25/32	.727	.712	.044	.040	.121	.111	.062	.052	.052	.040	.736	.730	.049	.046	97566-S
13/16	.756	.741	.044	.040	.125	.115	.065	.055	.060	.048	.765	.759	.049	.046	97567-S
7/8	.815	.800	.044	.040	.133	.123	.069	.059	.060	.048	.824	.818	.049	.046	97568-S
15/16	.872	.857	.044	.040	.141	.131	.073	.063	.060	.048	.885	.879	.049	.046	97569-S
1	.930	.915	.044	.040	.149	.139	.077	.067	.060	.048	.943	.937	.049	.046	97570-S
1-1/16	.992	.967	.052	.048	.153	.141	.079	.067	.093	.076	1.002	.994	.060	.056	97571-S
1-1/8	1.051	1.026	.052	.048	.156	.144	.081	.069	.093	.076	1.063	1.055	.060	.056	97572-S
1-3/16	1.108	1.083	.052	.048	.159	.147	.082	.070	.093	.076	1.122	1.114	.060	.056	97573-S
1-1/4	1.166	1.141	.052	.048	.163	.151	.085	.073	.093	.076	1.180	1.172	.060	.056	97574-S
1-5/16	1.224	1.199	.052	.048	.167	.155	.086	.074	.093	.076	1.236	1.228	.060	.056	97575-S
1-3/8	1.282	1.257	.052	.048	.171	.159	.088	.076	.093	.076	1.295	1.287	.060	.056	97576-S
1-7/16	1.343	1.318	.052	.048	.175	.163	.091	.079	.093	.076	1.354	1.346	.060	.056	97577-S
1-1/2	1.397	1.372	.052	.048	.179	.167	.092	.080	.093	.076	1.410	1.402	.060	.056	97578-S
1-9/16	1.459	1.426	.065	.059	.184	.172	.095	.083	.093	.076	1.473	1.463	.072	.068	97579-S
1-5/8	1.516	1.483	.065	.059	.189	.177	.098	.086	.093	.076	1.534	1.524	.072	.068	97580-S
1-11/16	1.573	1.540	.065	.059	.194	.182	.100	.088	.093	.076	1.594	1.584	.072	.068	97581-S
1-3/4	1.650	1.617	.065	.059	.202	.190	.104	.092	.093	.076	1.655	1.645	.072	.068	97582-S
1-13/16	1.688	1.655	.065	.059	.205	.193	.106	.094	.093	.076	1.713	1.703	.072	.068	97583-S
1-7/8	1.748	1.715	.065	.059	.211	.199	.108	.096	.093	.076	1.774	1.764	.072	.068	97584-S
1-31/32	1.832	1.799	.065	.059	.218	.206	.112	.100	.093	.076	1.862	1.852	.072	.068	97585-S
2	1.863	1.830	.065	.059	.222	.210	.114	.102	.093	.076	1.891	1.881	.072	.068	97586-S
2-1/8	2.008	1.968	.081	.075	.236	.222	.124	.110	.135	.118	2.009	1.997	.091	.086	97587-S
2-1/4	2.096	2.056	.081	.075	.244	.230	.125	.111	.135	.118	2.126	2.114	.091	.086	97588-S
2-3/8	2.212	2.172	.081	.075	.255	.241	.131	.117	.135	.118	2.245	2.233	.091	.086	97589-S
2-1/2	2.328	2.288	.081	.075	.266	.252	.137	.123	.135	.118	2.366	2.354	.091	.086	97590-S
2-5/8	2.448	2.398	.081	.075	.278	.264	.142	.128	.135	.118	2.487	2.475	.091	.086	97591-S
2-3/4	2.563	2.513	.096	.090	.287	.273	.147	.133	.135	.118	2.608	2.596	.108	.103	97592-S
2-7/8	2.679	2.629	.096	.090	.297	.283	.152	.138	.135	.118	2.727	2.715	.108	.103	97593-S
2-15/16	2.737	2.687	.096	.090	.303	.289	.155	.141	.135	.118	2.785	2.773	.108	.103	97594-S
3	2.795	2.745	.096	.090	.309	.295	.158	.144	.135	.118	2.844	2.832	.108	.103	97595-S
3-5/32	2.940	2.890	.096	.090	.324	.308	.167	.151	.135	.118	2.992	2.980	.108	.103	97596-S
3-1/4	3.026	2.976	.096	.090	.332	.316	.170	.154	.135	.118	3.082	3.070	.108	.103	97597-S
3-11/32	3.112	3.062	.096	.090	.340	.324	.173	.157	.135	.118	3.172	3.160	.108	.103	97598-S
3-1/2	3.257	3.207	.112	.106	.353	.337	.181	.165	.140	.123	3.322	3.310	.125	.120	97599-S
3-3/4	3.488	3.438	.112	.106	.366	.350	.187	.171	.140	.123	3.558	3.546	.125	.120	97600-S
3-15/16	3.662	3.612	.112	.106	.376	.360	.191	.175	.140	.123	3.740	3.728	.125	.120	97601-S
4	3.720	3.670	.112	.106	.379	.363	.193	.177	.140	.123	3.798	3.786	.125	.120	97602-S

MATERIAL: SAE 1065 - 1090 Steel
Preferred Order of Recommended Finishes: S2 - S7 - S8 - S36
For General Specifications see page K-950.03. For Finishes see Addendum.

FORD MOTOR COMPANY
STANDARD PARTS

RETAINING RINGS-TYPE SD — EXTERNAL

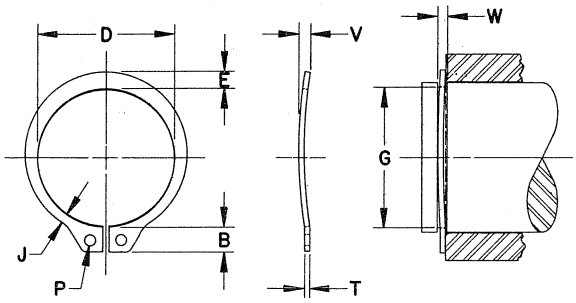

NOMINAL SHAFT DIAMETER	RETAINER DIMENSIONS														GROOVE DIMENSIONS				FORD PART NUMBERS
	D FREE INSIDE DIAMETER		T MATERIAL THICKNESS		V OVERALL BOW HEIGHT		E LARGE SECTION		J SMALL SECTION		B LUG HEIGHT		P HOLE DIAMETER		G GROOVE DIAMETER		W GROOVE WIDTH		
	MAX	MIN	MAX	MIN	MAX	MIN	MAX	MIN	MAX	MIN	MAX	MIN	MAX	MIN	MAX	MIN	MAX	MIN	
3/16	.170	.164	.017	.013	.042	.030	.027	.023	.018	.014	.052	.048	.035	.023	.176	.173	.032	.030	97648-S
7/32	.198	.192	.017	.013	.042	.030	.030	.026	.019	.015	.058	.054	.036	.024	.205	.203	.032	.030	97649-S
1/4	.227	.221	.027	.023	.053	.041	.038	.032	.028	.022	.083	.077	.051	.039	.231	.228	.043	.040	97650-S
9/32	.258	.251	.027	.023	.053	.041	.041	.035	.028	.022	.083	.077	.051	.039	.263	.259	.043	.040	97651-S
5/16	.283	.276	.027	.023	.053	.041	.043	.037	.029	.023	.090	.084	.051	.039	.292	.288	.043	.040	97652-S
11/32	.311	.304	.027	.023	.053	.041	.045	.039	.029	.023	.090	.084	.051	.039	.323	.319	.043	.040	97653-S
3/8	.340	.333	.027	.023	.053	.041	.053	.047	.033	.027	.091	.085	.051	.039	.354	.350	.043	.040	97654-S
13/32	.368	.361	.027	.023	.053	.041	.057	.051	.036	.030	.090	.084	.051	.039	.384	.380	.043	.040	97655-S
7/16	.397	.390	.027	.023	.053	.041	.058	.052	.036	.030	.091	.085	.051	.039	.414	.410	.043	.040	97656-S
15/32	.430	.423	.027	.023	.053	.041	.063	.057	.038	.032	.091	.085	.051	.039	.445	.441	.043	.040	97657-S
1/2	.463	.456	.037	.033	.070	.056	.069	.061	.044	.036	.111	.105	.057	.045	.470	.466	.058	.055	97658-S
9/16	.526	.511	.037	.033	.070	.056	.076	.068	.045	.037	.111	.105	.057	.045	.532	.528	.058	.055	97659-S
19/32	.556	.541	.037	.033	.070	.056	.080	.072	.047	.039	.112	.106	.057	.045	.562	.556	.058	.055	97660-S
5/8	.584	.569	.037	.033	.070	.056	.084	.076	.049	.041	.113	.107	.057	.045	.591	.585	.058	.055	97661-S
11/16	.640	.625	.044	.040	.081	.065	.089	.079	.053	.043	.140	.132	.062	.050	.649	.643	.065	.062	97662-S
3/4	.698	.683	.044	.040	.081	.065	.097	.087	.056	.046	.140	.132	.062	.050	.707	.701	.065	.062	97663-S
25/32	.727	.712	.044	.040	.081	.065	.099	.089	.057	.047	.140	.132	.062	.050	.736	.730	.065	.062	97664-S
13/16	.756	.741	.044	.040	.081	.065	.101	.091	.059	.049	.140	.132	.062	.050	.765	.759	.065	.062	97665-S
7/8	.815	.800	.044	.040	.081	.065	.109	.099	.062	.052	.141	.133	.062	.050	.824	.818	.065	.062	97666-S
15/16	.872	.857	.044	.040	.081	.065	.115	.105	.068	.058	.170	.162	.093	.076	.885	.879	.065	.062	97667-S
1	.930	.915	.044	.040	.081	.065	.121	.111	.070	.060	.171	.163	.093	.076	.943	.937	.065	.062	97668-S
1-1/16	.992	.967	.052	.048	.097	.073	.128	.116	.075	.063	.185	.177	.093	.076	1.002	.994	.073	.070	97669-S
1-1/8	1.051	1.026	.052	.048	.097	.073	.134	.122	.077	.065	.186	.178	.093	.076	1.063	1.055	.073	.070	97670-S
1-3/16	1.108	1.083	.052	.048	.097	.073	.138	.126	.078	.066	.186	.178	.093	.076	1.122	1.114	.073	.070	97671-S
1-1/4	1.166	1.141	.052	.048	.097	.073	.146	.134	.082	.070	.187	.179	.093	.076	1.180	1.172	.073	.070	97672-S
1-5/16	1.224	1.199	.052	.048	.097	.073	.152	.140	.082	.070	.187	.179	.093	.076	1.236	1.228	.073	.070	97673-S
1-3/8	1.282	1.257	.052	.048	.097	.073	.158	.146	.088	.076	.188	.180	.093	.076	1.295	1.287	.073	.070	97674-S
1-7/16	1.343	1.318	.052	.048	.097	.073	.166	.154	.092	.080	.188	.180	.093	.076	1.354	1.346	.073	.070	97675-S
1-1/2	1.397	1.372	.052	.048	.097	.073	.174	.162	.097	.085	.218	.210	.135	.118	1.410	1.402	.073	.070	97676-S

MATERIAL: Sizes 3/16 thru 7/32 M-1567-C Copper. Others SAE 1065 - 1090 Steel.
Preferred Order of Recommended Finishes: S2 - S7 - S8 - S36
For General Specifications see page K-950.03. For Finishes see Addendum.

FORD MOTOR COMPANY
STANDARD PARTS

RETAINING RINGS-TYPE RC — EXTERNAL

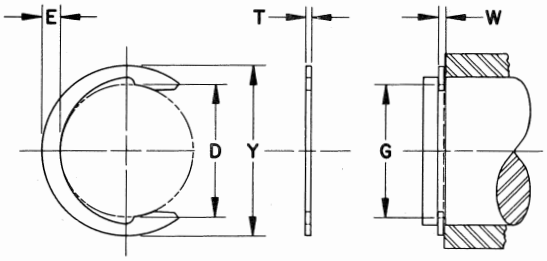

NOMINAL SHAFT DIAMETER	RETAINER DIMENSIONS							GROOVE DIMENSIONS				FORD PART NUMBERS
	D FREE INSIDE DIAMETER		Y FREE OUTSIDE DIAMETER	T MATERIAL THICKNESS		E LARGE SECTION		G DIAMETER		W WIDTH		
	MAX	MIN		MAX	MIN	MAX	MIN	MAX	MIN	MAX	MIN	
1/8	.104	.098	.165	.017	.013	.034	.028	.107	.104	.020	.018	97460-S
5/32	.133	.127	.205	.017	.013	.040	.034	.136	.133	.020	.018	97461-S
3/16	.163	.157	.244	.017	.013	.045	.039	.166	.163	.020	.018	97462-S
7/32	.190	.182	.275	.027	.023	.047	.041	.195	.191	.032	.029	97463-S
15/64	.206	.118	.295	.027	.023	.050	.042	.210	.206	.032	.029	97464-S
1/4	.214	.206	.311	.027	.023	.054	.046	.222	.218	.032	.029	97465-S
9/32	.245	.237	.346	.027	.023	.055	.047	.249	.245	.032	.029	97466-S
5/16	.273	.265	.376	.027	.023	.057	.049	.278	.274	.032	.029	97467-S
3/8	.331	.323	.448	.027	.023	.064	.056	.337	.333	.032	.029	97468-S
13/32	.362	.354	.486	.027	.023	.067	.059	.366	.362	.032	.029	97469-S
7/16	.389	.381	.517	.027	.023	.069	.061	.395	.391	.032	.029	97470-S
15/32	.418	.410	.553	.027	.023	.072	.064	.423	.419	.032	.029	97471-S
1/2	.447	.435	.581	.037	.033	.075	.065	.453	.447	.042	.039	97472-S
9/16	.503	.491	.653	.037	.033	.083	.073	.510	.504	.042	.039	97473-S
5/8	.559	.547	.715	.037	.033	.086	.076	.566	.560	.042	.039	97474-S
11/16	.615	.601	.784	.044	.040	.091	.081	.622	.616	.049	.046	97475-S
3/4	.672	.658	.845	.044	.040	.095	.085	.679	.673	.049	.046	97476-S
13/16	.728	.714	.915	.044	.040	.102	.092	.735	.729	.049	.046	97477-S
7/8	.784	.770	.991	.044	.040	.110	.100	.792	.786	.049	.046	97478-S
15/16	.837	.823	1.058	.044	.040	.117	.107	.846	.840	.049	.046	97479-S
1	.894	.880	1.130	.044	.040	.125	.115	.903	.897	.049	.046	97480-S
1-1/8	1.005	.989	1.267	.052	.048	.142	.128	1.017	1.009	.060	.056	97481-S
1-3/16	1.066	1.050	1.342	.052	.048	.149	.135	1.073	1.065	.060	.056	97482-S
1-1/4	1.118	1.102	1.415	.052	.048	.157	.143	1.130	1.122	.060	.056	97483-S
1-3/8	1.228	1.212	1.555	.052	.048	.172	.158	1.241	1.233	.060	.056	97484-S
1-1/2	1.339	1.323	1.691	.052	.048	.187	.173	1.354	1.346	.060	.056	97485-S
1-5/8	1.453	1.433	1.833	.065	.059	.202	.188	1.468	1.458	.072	.068	97486-S
1-3/4	1.565	1.545	1.975	.065	.059	.217	.203	1.581	1.571	.072	.068	97487-S
1-7/8	1.677	1.657	2.117	.065	.059	.232	.218	1.694	1.684	.072	.068	97488-S
2	1.787	1.767	2.257	.065	.059	.247	.233	1.805	1.795	.072	.068	97489-S

MATERIAL: SAE 1065 - 1090 Steel.
Preferred Order of Recommended Finishes: S2 - S7 - S8 - S36
For General Specifications see page K-950.03. For Finishes see Addendum.

FORD MOTOR COMPANY
STANDARD PARTS

RETAINING RINGS-TYPE RB — EXTERNAL

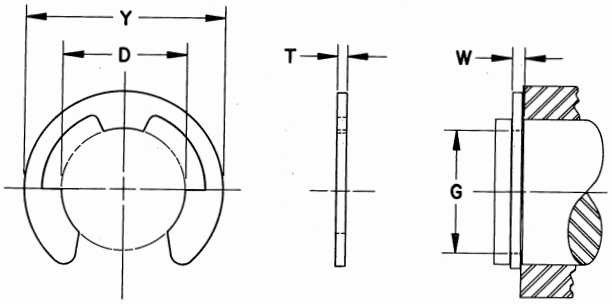

NOMINAL SHAFT DIAMETER	RING DIMENSIONS					GROOVE DIMENSIONS				FORD PART NUMBERS
	D FREE INSIDE DIAMETER		Y FREE OUTSIDE DIAMETER	T THICKNESS		G DIAMETER		W WIDTH		
	MAX	MIN		MAX	MIN	MAX	MIN	MAX	MIN	
1/16	.052	.048	.156	.011	.009	.054	.052	.014	.012	97400-S
3/32	.074	.070	.187	.017	.013	.076	.074	.020	.018	97401-S
7/64	.077	.073	.375	.017	.013	.081	.079	.020	.018	97402-S
1/8	.095	.091	.230	.017	.013	.097	.095	.020	.018	97403-S
9/64	.103	.099	.270	.027	.023	.107	.105	.032	.029	97404-S
5/32	.115	.111	.282	.027	.023	.118	.116	.032	.029	97405-S
11/64	.126	.122	.312	.027	.023	.129	.127	.032	.029	97406-S
3/16	.146	.142	.335	.027	.023	.149	.147	.032	.029	97407-S
7/32	.186	.182	.437	.027	.023	.190	.188	.032	.029	97408-S
1/4	.208	.204	.527	.027	.023	.213	.210	.032	.029	97409-S
5/16	.245	.239	.500	.027	.023	.253	.250	.032	.029	97410-S
3/8	.302	.296	.660	.037	.033	.306	.303	.042	.039	97411-S
7/16	.339	.333	.687	.037	.033	.346	.343	.042	.039	97412-S
1/2	.394	.388	.800	.044	.040	.399	.396	.049	.046	97413-S
5/8	.483	.475	.940	.044	.040	.488	.485	.049	.046	97414-S
3/4	.577	.569	1.120	.052	.048	.583	.580	.059	.056	97415-S
7/8	.671	.663	1.300	.052	.048	.678	.675	.059	.056	97416-S
1-3/16	1.072	1.056	1.626	.065	.059	1.084	1.079	.072	.068	97417-S
1-3/8	1.219	1.203	1.875	.065	.059	1.235	1.230	.072	.068	97418-S

MATERIAL: SAE 1065 - 1090 Steel.
Preferred Order of Recommended Finishes: S2 - S7 - S8 - S36
For General Specifications see page K-950.03. For Finishes see Addendum.

FORD MOTOR COMPANY
STANDARD PARTS

RETAINING RINGS-TYPE RD — EXTERNAL

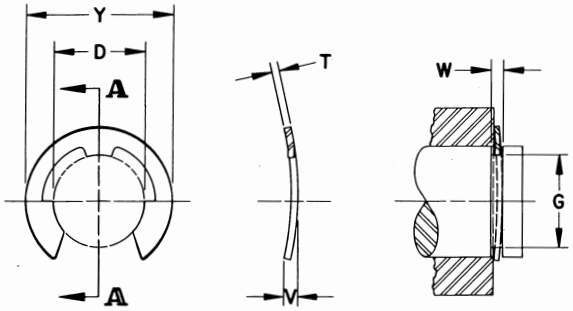

SECTION A-A

NOMINAL SHAFT DIAMETER	RETAINER DIMENSIONS							GROOVE DIMENSIONS				FORD PART NUMBERS
	D FREE INSIDE DIAMETER		Y FREE OUTSIDE DIAMETER	V OVERALL BOW HEIGHT		T MATERIAL THICKNESS		G DIAMETER		W WIDTH		
	MAX	MIN		MAX	MIN	MAX	MIN	MAX	MIN	MAX	MIN	
7/64	.077	.073	.375	.048	.038	.017	.013	.081	.079	.038	.035	97490-S
1/8	.095	.091	.230	.033	.025	.011	.009	.097	.095	.025	.022	97491-S
9/64	.103	.099	.270	.038	.028	.011	.009	.107	.105	.028	.025	97492-S
5/32	.115	.111	.282	.040	.030	.017	.013	.118	.116	.030	.027	97493-S
11/64	.126	.122	.312	.042	.032	.017	.013	.129	.127	.032	.029	97494-S
3/16	.146	.142	.335	.043	.033	.017	.013	.149	.147	.033	.030	97495-S
7/32	.186	.182	.437	.058	.043	.017	.013	.190	.188	.043	.040	97496-S
1/4	.208	.204	.527	.067	.052	.027	.023	.213	.210	.052	.049	97497-S
5/16	.245	.239	.500	.065	.050	.027	.023	.253	.250	.050	.047	97498-S
3/8	.302	.296	.660	.076	.060	.037	.033	.306	.303	.063	.060	97499-S
7/16	.339	.333	.687	.076	.060	.037	.033	.346	.343	.063	.060	97500-S
1/2	.394	.388	.800	.093	.075	.044	.040	.399	.396	.076	.073	97501-S
5/8	.483	.475	.940	.098	.080	.044	.040	.488	.485	.080	.077	97502-S
3/4	.577	.569	1.120	.112	.088	.052	.048	.583	.580	.088	.085	97503-S
7/8	.671	.663	1.300	.112	.088	.052	.048	.678	.675	.088	.085	97504-S
1-3/16	1.072	1.056	1.626	.139	.109	.065	.059	1.084	1.079	.111	.107	97505-S
1-3/8	1.219	1.203	1.875	.139	.109	.065	.059	1.235	1.230	.111	.107	97506-S

MATERIAL: SAE 1065 - 1090 Steel.
Preferred Order of Recommended Finishes: S2 - S7 - S8 - S36
For General Specifications see page K-950.03. For Finishes see Addendum.

FORD MOTOR COMPANY
STANDARD PARTS

HOSE CLAMPS
SLOTTED BAND

TANGENTIAL SCREW

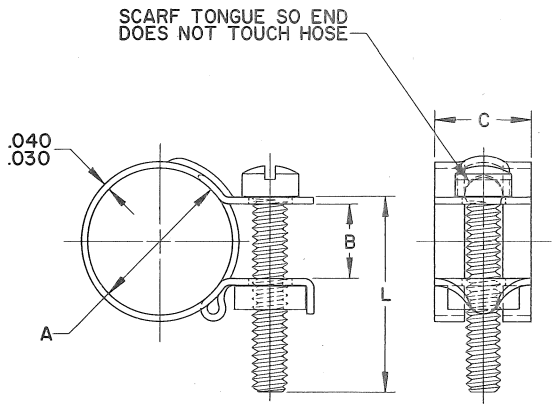

ONE SLOT

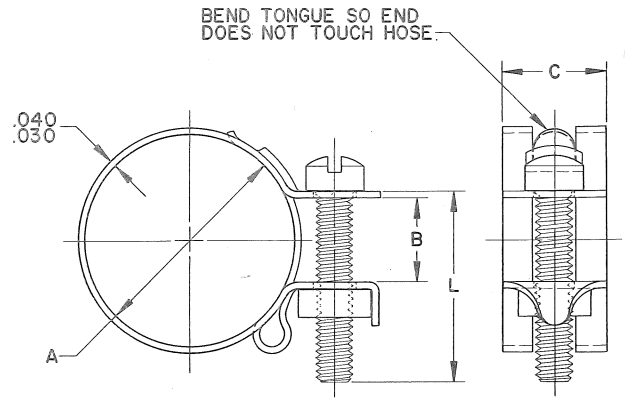

2 OR 3 SLOT

TYPE B

Nominal Diameter	A Diameter Open	A Diameter Closed	B Gap at Nom. Dia. Min.	C Band Width	L Screw Length Min.	Ford Part Numbers
9/16	.64	.48	.38	.50	1.00	97200-S
5/8	.70	.55	.38	.50	1.00	97201-S
11/16	.77	.61	.38	.50	1.00	97202-S
3/4	.83	.67	.38	.50	1.00	97203-S
13/16	.89	.73	.38	.50	1.00	97204-S
7/8	.95	.80	.38	.50	1.00	97205-S
15/16	1.02	.86	.38	.50	1.00	97206-S
1 1/32	1.11	.95	.38	.50	1.00	97207-S
1 1/16	1.14	.98	.38	.50	1.00	97208-S
1 1/8	1.20	1.02	.38	.50	1.12	97209-S
1 3/16	1.27	1.08	.50	.50	1.12	97210-S
1 1/4	1.33	1.14	.50	.62	1.12	97211-S
1 5/16	1.39	1.20	.50	.62	1.12	97212-S
1 3/8	1.45	1.27	.50	.62	1.12	97213-S
1 7/16	1.52	1.33	.50	.62	1.12	97214-S
1 1/2	1.58	1.39	.50	.62	1.12	97215-S
1 9/16	1.64	1.45	.50	.62	1.12	97216-S
1 5/8	1.70	1.52	.50	.62	1.12	97217-S
1 11/16	1.77	1.58	.50	.62	1.12	97218-S
1 3/4	1.83	1.64	.50	.62	1.12	97219-S
1 13/16	1.89	1.70	.50	.62	1.12	97220-S
1 7/8	1.95	1.77	.50	.62	1.12	97221-S
1 15/16	2.02	1.83	.50	.62	1.12	97222-S
2 1/32	2.11	1.92	.50	.62	1.12	97223-S
2 1/8	2.20	2.02	.50	.62	1.12	97224-S
2 3/16	2.27	2.08	.50	.62	1.12	97225-S
2 9/32	2.36	2.17	.50	.62	1.12	97226-S
2 3/8	2.48	2.27	.50	.62	1.25	97227-S
2 1/2	2.61	2.39	.50	.62	1.25	97228-S
2 5/8	2.75	2.52	.50	.62	1.25	97229-S
2 3/4	2.88	2.64	.50	.62	1.25	97230-S
2 7/8	3.00	2.77	.50	.62	1.25	97231-S
3	3.12	2.89	.50	.62	1.25	97232-S
3 1/8	3.25	3.02	.50	.62	1.25	97233-S
3 1/4	3.38	3.14	.50	.62	1.25	97234-S
3 3/8	3.50	3.27	.50	.62	1.25	97235-S
3 9/16	3.81	3.42	.62	.75	1.38	97236-S

NOTES: MATERIAL: SAE 1010 Steel or equivalent.
SCREWS: #10-24 fillister head slotted or fillister washer head slotted.
Screw clearance hole diameters .219-.234. All screws shall conform to the standards for machine screws, except length tolerances which shall be plus instead of minus.
Clamps shall accept a round mandrel of the diameter shown in the open column and shall close tight upon a round mandrel of the diameter shown in the closed column.
For General Specifications see Page K-950.02. For Finishes see Addendum.

FORD MOTOR COMPANY
STANDARD PARTS

HOSE CLAMPS

RADIAL SCREW

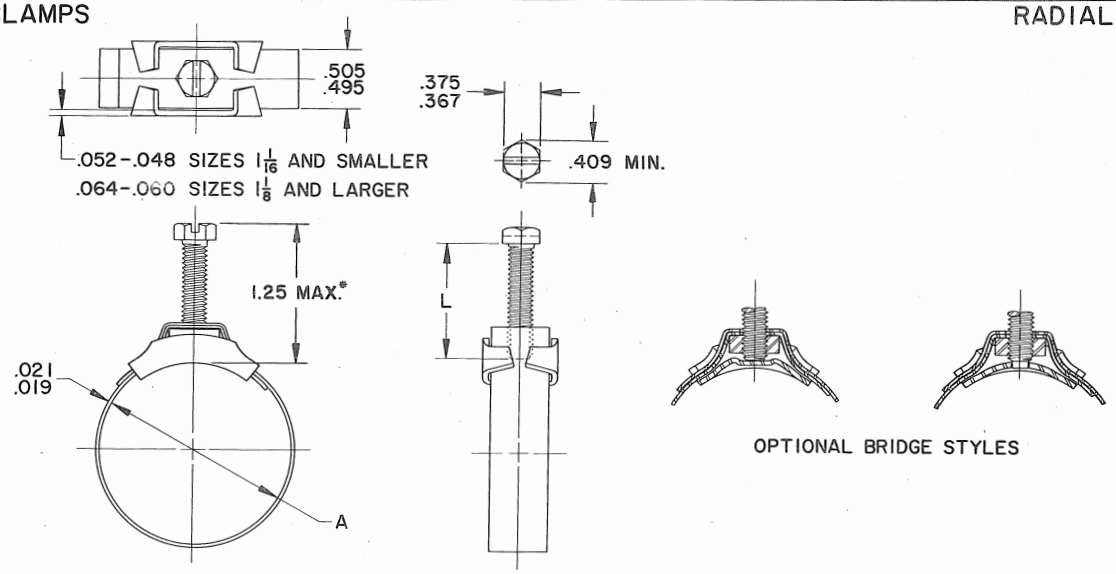

TYPE C

Nominal Diameter	A Diameter Open	A Diameter Closed	L Screw Length	Ford Part Numbers
7/8	.94	.62	.88	97353-S
15/16	1.00	.69	.88	97354-S
1	1.06	.75	.88	97355-S
1 1/16	1.12	.81	.88	97356-S
1 1/8	1.19	.88	.88	97357-S
1 3/16	1.25	.94	.88	97358-S
1 1/4	1.31	1.00	.88	97359-S
1 5/16	1.38	1.06	.88	97360-S
1 3/8	1.44	1.12	.88	97361-S
1 7/16	1.50	1.19	.88	97362-S
1 1/2	1.56	1.25	.88	97363-S
1 9/16	1.62	1.31	.88	97364-S
1 5/8	1.69	1.38	.88	97365-S
1 11/16	1.75	1.44	.88	97366-S
1 3/4	1.81	1.50	.88	97367-S
1 13/16	1.88	1.56	.88	97368-S
1 7/8	1.94	1.62	.88	97369-S
1 15/16	2.00	1.69	.88	97370-S
2	2.06	1.69	1.00	97371-S
2 1/16	2.12	1.75	1.00	97372-S
2 1/8	2.19	1.81	1.00	97373-S
2 3/16	2.25	1.88	1.00	97374-S
2 1/4	2.31	1.94	1.00	97375-S
2 5/16	2.38	2.00	1.00	97376-S
2 3/8	2.44	2.06	1.00	97377-S
2 7/16	2.50	2.12	1.00	97378-S
2 1/2	2.56	2.19	1.00	97379-S
2 9/16	2.62	2.25	1.00	97380-S
2 5/8	2.69	2.31	1.00	97381-S
2 11/16	2.75	2.38	1.00	97382-S
2 3/4	2.81	2.44	1.00	97383-S
2 13/16	2.88	2.50	1.00	97384-S
2 7/8	2.94	2.56	1.00	97385-S
2 15/16	3.00	2.62	1.00	97386-S
3 1/16	3.12	2.75	1.00	97387-S
3 3/16	3.25	2.88	1.00	97388-S
3 1/2	3.56	3.19	1.00	97389-S

NOTES: MATERIAL: SAE 1010 Steel or equivalent.
SCREW: #12-24 hexagon head slotted flat or pilot point, as shown.
Slot location or indentation optional.
*Reference dimension for clearance purposes only.
Clamps shall accept a round mandrel of the diameter shown in the open column and shall close tight upon a round mandrel of the diameter shown in the closed column.
For General Specifications see Page K-950.02. For Finishes see Addendum.

FORD MOTOR COMPANY
STANDARD PARTS

HOSE CLAMPS
SLOTTED BAND

TANGENTIAL SCREW

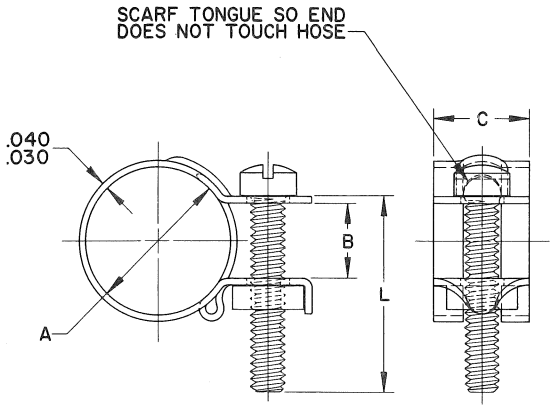

ONE SLOT

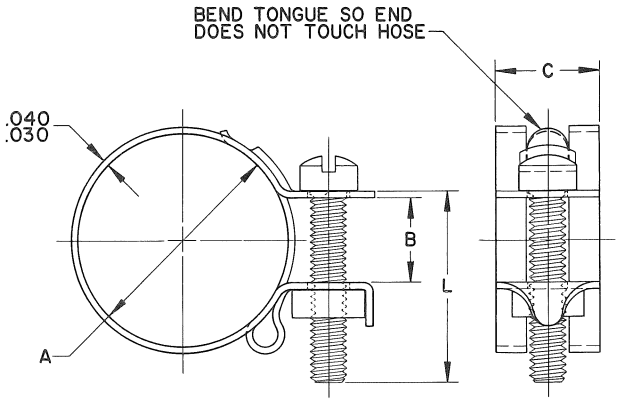

2 OR 3 SLOT

TYPE B

Nominal Diameter	A Diameter Open	A Diameter Closed	B Gap at Nom. Dia. Min.	C Band Width	L Screw Length Min.	Ford Part Numbers
9/16	.64	.48	.38	.50	1.00	97200-S
5/8	.70	.55	.38	.50	1.00	97201-S
11/16	.77	.61	.38	.50	1.00	97202-S
3/4	.83	.67	.38	.50	1.00	97203-S
13/16	.89	.73	.38	.50	1.00	97204-S
7/8	.95	.80	.38	.50	1.00	97205-S
15/16	1.02	.86	.38	.50	1.00	97206-S
1 1/32	1.11	.95	.38	.50	1.00	97207-S
1 1/16	1.14	.98	.38	.50	1.00	97208-S
1 1/8	1.20	1.02	.38	.50	1.12	97209-S
1 3/16	1.27	1.08	.50	.50	1.12	97210-S
1 1/4	1.33	1.14	.50	.62	1.12	97211-S
1 5/16	1.39	1.20	.50	.62	1.12	97212-S
1 3/8	1.45	1.27	.50	.62	1.12	97213-S
1 7/16	1.52	1.33	.50	.62	1.12	97214-S
1 1/2	1.58	1.39	.50	.62	1.12	97215-S
1 9/16	1.64	1.45	.50	.62	1.12	97216-S
1 5/8	1.70	1.52	.50	.62	1.12	97217-S
1 11/16	1.77	1.58	.50	.62	1.12	97218-S
1 3/4	1.83	1.64	.50	.62	1.12	97219-S
1 13/16	1.89	1.70	.50	.62	1.12	97220-S
1 7/8	1.95	1.77	.50	.62	1.12	97221-S
1 15/16	2.02	1.83	.50	.62	1.12	97222-S
2 1/32	2.11	1.92	.50	.62	1.12	97223-S
2 1/8	2.20	2.02	.50	.62	1.12	97224-S
2 3/16	2.27	2.08	.50	.62	1.12	97225-S
2 9/32	2.36	2.17	.50	.62	1.12	97226-S
2 3/8	2.48	2.27	.50	.62	1.25	97227-S
2 1/2	2.61	2.39	.50	.62	1.25	97228-S
2 5/8	2.75	2.52	.50	.62	1.25	97229-S
2 3/4	2.88	2.64	.50	.62	1.25	97230-S
2 7/8	3.00	2.77	.50	.62	1.25	97231-S
3	3.12	2.89	.50	.62	1.25	97232-S
3 1/8	3.25	3.02	.50	.62	1.25	97233-S
3 1/4	3.38	3.14	.50	.62	1.25	97234-S
3 3/8	3.50	3.27	.50	.62	1.25	97235-S
3 9/16	3.81	3.42	.62	.75	1.38	97236-S

NOTES: MATERIAL: SAE 1010 Steel or equivalent.
SCREWS: #10-24 fillister head slotted or fillister washer head slotted.
Screw clearance hole diameters .219-.234. All screws shall conform to the standards for machine screws, except length tolerances which shall be plus instead of minus.
Clamps shall accept a round mandrel of the diameter shown in the open column and shall close tight upon a round mandrel of the diameter shown in the closed column.
For General Specifications see Page K-950.02. For Finishes see Addendum.

FORD MOTOR COMPANY
STANDARD PARTS

HOSE CLAMPS

RADIAL SCREW

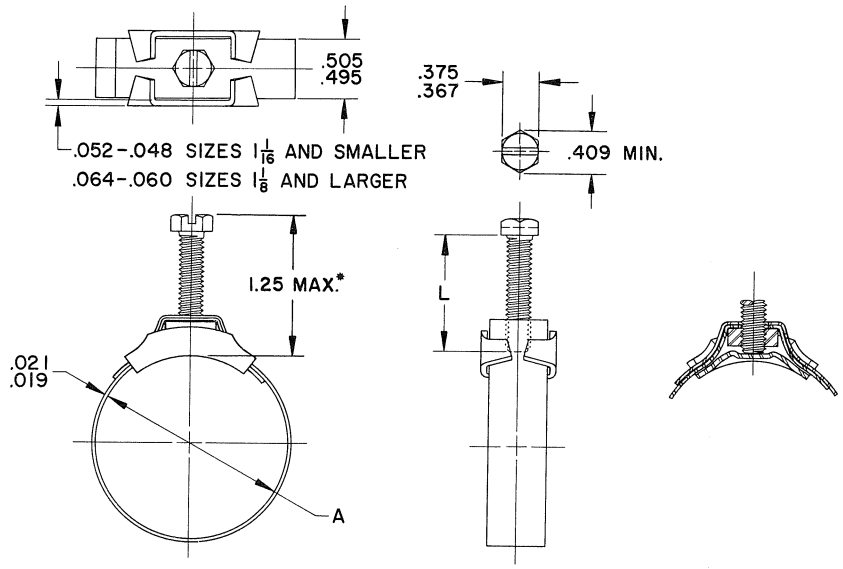

TYPE C

Nominal Diameter	A Diameter Open	A Diameter Closed	L Screw Length	Ford Part Numbers
7/8	.94	.62	.88	97353-S
15/16	1.00	.69	.88	97354-S
1	1.06	.75	.88	97355-S
1 1/16	1.12	.81	.88	97356-S
1 1/8	1.19	.88	.88	97357-S
1 3/16	1.25	.94	.88	97358-S
1 1/4	1.31	1.00	.88	97359-S
1 5/16	1.38	1.06	.88	97360-S
1 3/8	1.44	1.12	.88	97361-S
1 7/16	1.50	1.19	.88	97362-S
1 1/2	1.56	1.25	.88	97363-S
1 9/16	1.62	1.31	.88	97364-S
1 5/8	1.69	1.38	.88	97365-S
1 11/16	1.75	1.44	.88	97366-S
1 3/4	1.81	1.50	.88	97367-S
1 13/16	1.88	1.56	.88	97368-S
1 7/8	1.94	1.62	.88	97369-S
1 15/16	2.00	1.69	.88	97370-S
2	2.06	1.69	1.00	97371-S
2 1/16	2.12	1.75	1.00	97372-S
2 1/8	2.19	1.81	1.00	97373-S
2 3/16	2.25	1.88	1.00	97374-S
2 1/4	2.31	1.94	1.00	97375-S
2 5/16	2.38	2.00	1.00	97376-S
2 3/8	2.44	2.06	1.00	97377-S
2 7/16	2.50	2.12	1.00	97378-S
2 1/2	2.56	2.19	1.00	97379-S
2 9/16	2.62	2.25	1.00	97380-S
2 5/8	2.69	2.31	1.00	97381-S
2 11/16	2.75	2.38	1.00	97382-S
2 3/4	2.81	2.44	1.00	97383-S
2 13/16	2.88	2.50	1.00	97384-S
2 7/8	2.94	2.56	1.00	97385-S
2 15/16	3.00	2.62	1.00	97386-S
3 1/16	3.12	2.75	1.00	97387-S
3 3/16	3.25	2.88	1.00	97388-S
3 1/2	3.56	3.19	1.00	97389-S

Recommended Finish: S8, S35, S41. Material: SAE 1010 Steel or equivalent.
Screw: #12-24 hexagon head slotted flat or pilot point, as shown.
Slot location or indentation optional.
*Reference dimension for clearance purposes only.
Clamps shall accept a round mandrel of the diameter shown in the open column and shall close tight upon a round mandrel of the diameter shown in the closed column.
Clamps may be marked with Open diameter dimension.
For General Specifications see Page K-950.02. For Finishes see Addendum.

FORD MOTOR COMPANY
STANDARD PARTS

HOSE CLAMPS
SOLID BAND

TANGENTIAL SCREW

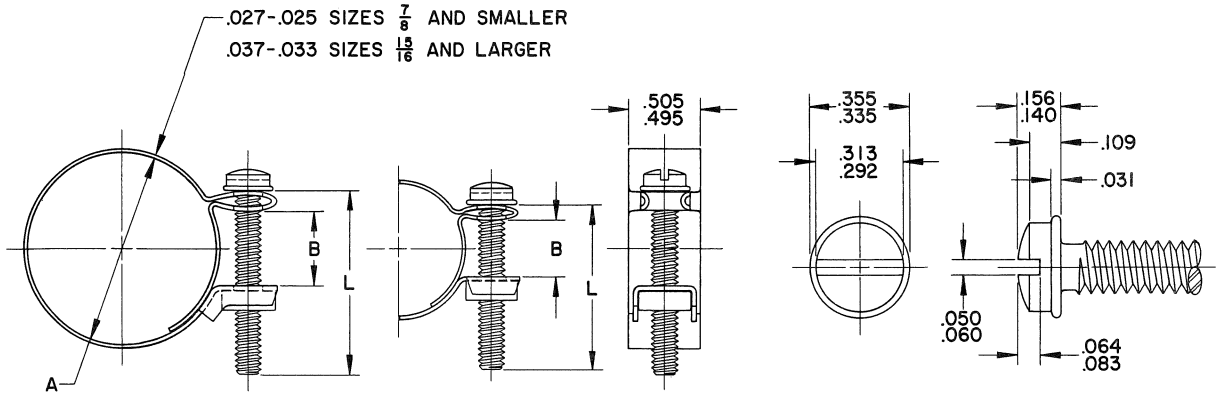

DETAIL OF NUT RETENTION ON SIZES 1 1/4" AND SMALLER

DETAIL OF SCREW HEAD

TYPE D

Nominal Diameter	A Diameter Open	A Diameter Closed	B Gap at Nom. Dia. Min.	L Screw Length Min.	Ford Part Numbers
5/8	.72	.53	.38	1.12	97237-S
11/16	.78	.59	.38	1.12	97238-S
3/4	.84	.66	.38	1.12	97239-S
13/16	.91	.72	.38	1.12	97240-S
7/8	.97	.78	.38	1.12	97241-S
15/16	1.03	.84	.38	1.12	97242-S
1	1.09	.91	.38	1.12	97243-S
1 1/16	1.16	.97	.38	1.12	97244-S
1 1/8	1.22	1.03	.38	1.12	97245-S
1 3/16	1.28	1.06	.50	1.25	97246-S
1 1/4	1.34	1.12	.50	1.25	97247-S
1 5/16	1.41	1.19	.50	1.25	97248-S
1 3/8	1.47	1.25	.50	1.25	97249-S
1 7/16	1.53	1.31	.50	1.25	97250-S
1 1/2	1.59	1.38	.50	1.25	97251-S
1 9/16	1.66	1.44	.50	1.25	97252-S
1 5/8	1.72	1.50	.50	1.25	97253-S
1 11/16	1.78	1.56	.50	1.25	97254-S
1 3/4	1.84	1.62	.50	1.25	97255-S
1 13/16	1.91	1.69	.50	1.25	97256-S
1 7/8	1.97	1.75	.50	1.25	97257-S
1 15/16	2.03	1.81	.50	1.25	97258-S
2	2.09	1.88	.50	1.25	97259-S
2 1/16	2.16	1.94	.50	1.25	97260-S
2 1/8	2.22	2.00	.50	1.25	97261-S
2 3/16	2.28	2.06	.50	1.25	97262-S
2 1/4	2.34	2.12	.50	1.25	97263-S
2 5/16	2.41	2.19	.50	1.25	97264-S
2 3/8	2.47	2.22	.62	1.38	97265-S
2 7/16	2.53	2.28	.62	1.38	97266-S
2 1/2	2.59	2.34	.62	1.38	97267-S
2 9/16	2.66	2.41	.62	1.38	97268-S
2 5/8	2.72	2.47	.62	1.38	97269-S
2 11/16	2.78	2.53	.62	1.38	97270-S
2 3/4	2.84	2.59	.62	1.38	97271-S
2 13/16	2.91	2.66	.62	1.38	97272-S
2 7/8	2.97	2.72	.62	1.38	97273-S
2 15/16	3.03	2.78	.62	1.38	97274-S
3	3.09	2.84	.62	1.38	97275-S
3 1/16	3.16	2.91	.62	1.38	97276-S
3 1/8	3.22	2.97	.62	1.38	97277-S
3 3/16	3.28	3.03	.62	1.38	97278-S
3 1/4	3.34	3.09	.62	1.38	97279-S
3 5/16	3.41	3.16	.62	1.38	97280-S
3 3/8	3.47	3.22	.62	1.38	97281-S
3 7/16	3.53	3.28	.62	1.38	97282-S
3 1/2	3.59	3.34	.62	1.38	97283-S
3 9/16	3.66	3.34	.75	1.50	97284-S
3 5/8	3.72	3.41	.75	1.50	97285-S
3 11/16	3.78	3.47	.75	1.50	97286-S
3 3/4	3.84	3.53	.75	1.50	97287-S
3 13/16	3.91	3.59	.75	1.50	97288-S
3 7/8	3.97	3.66	.75	1.50	97289-S
3 15/16	4.03	3.72	.75	1.50	97290-S
4	4.09	3.78	.75	1.50	97291-S
4 1/16	4.16	3.84	.75	1.50	97292-S
4 1/8	4.22	3.91	.75	1.50	97293-S
4 3/16	4.22	3.97	.75	1.50	97294-S
4 1/4	4.28	4.03	.75	1.50	97295-S
4 5/16	4.34	4.09	.75	1.50	97296-S
4 3/8	4.47	4.16	.75	1.50	97297-S
4 7/16	4.53	4.22	.75	1.50	97298-S
4 1/2	4.59	4.28	.75	1.50	97299-S
4 9/16	4.66	4.34	.75	1.50	97300-S
4 5/8	4.72	4.41	.75	1.50	97301-S
4 11/16	4.78	4.47	.75	1.50	97302-S
4 3/4	4.84	4.53	.75	1.50	97303-S
4 13/16	4.91	4.59	.75	1.50	97304-S
4 7/8	4.97	4.66	.75	1.50	97305-S
4 15/16	5.03	4.72	.75	1.50	97306-S
5	5.09	4.78	.75	1.50	97307-S
5 1/16	5.16	4.84	.75	1.50	97308-S
5 1/8	5.22	4.91	.75	1.50	97309-S
5 3/16	5.28	4.97	.75	1.50	97310-S
5 1/4	5.34	5.03	.75	1.50	97311-S
5 5/16	5.41	5.09	.75	1.50	97312-S
5 3/8	5.47	5.16	.75	1.50	97313-S
5 7/16	5.53	5.22	.75	1.50	97314-S
5 1/2	5.59	5.28	.75	1.50	97315-S
5 9/16	5.66	5.34	.75	1.50	97316-S
5 5/8	5.72	5.41	.75	1.50	97317-S
5 11/16	5.78	5.47	.75	1.50	97318-S
5 3/4	5.84	5.53	.75	1.50	97319-S
5 13/16	5.91	5.59	.75	1.50	97320-S
5 7/8	5.97	5.66	.75	1.50	97321-S
5 15/16	6.03	5.72	.75	1.50	97322-S
6	6.09	5.78	.75	1.50	97323-S

NOTES: MATERIAL: SAE 1010 Steel or equivalent.
SCREWS: #10-24 fillister washer head. Screw clearance hole diameter .200-.210.
All screws shall conform to the standard for machine screws, except for special details shown, and length tolerances shall be plus instead of minus.
Clamps shall accept a round mandrel of the diameter shown in the open column and shall close tight upon a round mandrel of the diameter shown in the closed column.
For General Specifications see Page K-950.02. For Finishes see Addendum.

FORD MOTOR COMPANY
STANDARD PARTS

HOSE CLAMPS — SPRING WIRE

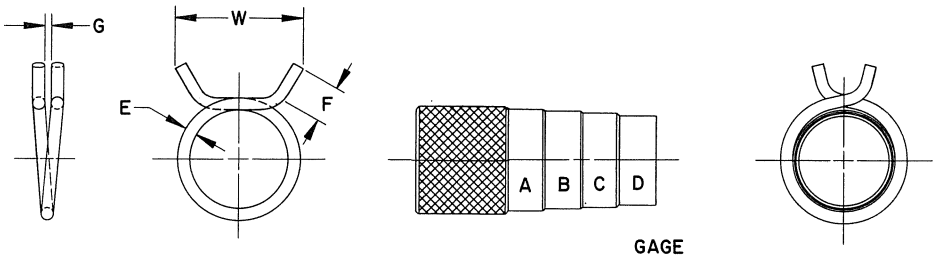

TYPE E

Size No.	A Diameter Range Max.	B Diameter Range Nom.	C Diameter Range Min.	D NOT GO Diameter	E Wire Diameter Max.	E Wire Diameter Min.	F Length of Tang Max.	F Length of Tang Min.	G Tang Clearance Max.	W Width Over Tangs Max.	N See Notes Max.	Ford Part Numbers
6	.380	.375	.370	.350	.083	.081	.380	.344	.015	.880	.004	97324-S
7	.442	.438	.432	.405	.088	.086	.380	.344	.015	.940	.004	97325-S
8	.510	.500	.490	.462	.093	.091	.380	.344	.025	1.000	.005	97326-S
9	.573	.562	.551	.520	.108	.106	.380	.344	.025	1.062	.006	97327-S
10	.640	.625	.610	.580	.108	.106	.380	.344	.025	1.062	.006	97328-S
11	.703	.688	.671	.635	.113	.111	.380	.344	.025	1.125	.006	97329-S
12	.770	.750	.730	.690	.113	.111	.380	.344	.031	1.190	.008	97330-S
13	.832	.812	.792	.740	.118	.116	.380	.344	.031	1.250	.008	97331-S
14	.900	.875	.850	.800	.123	.121	.380	.344	.031	1.250	.008	97332-S
15	.968	.938	.906	.855	.123	.121	.380	.344	.062	1.250	.008	97333-S
16	1.031	1.000	.969	.915	.133	.131	.380	.344	.062	1.312	.008	97334-S
17	1.090	1.062	1.034	.960	.143	.141	.410	.344	.062	1.500	.010	97335-S
18	1.150	1.125	1.100	1.030	.153	.151	.410	.344	.062	1.625	.010	97336-S
19	1.218	1.188	1.156	1.095	.153	.151	.410	.344	.062	1.625	.010	97337-S
20	1.280	1.250	1.219	1.145	.153	.151	.410	.344	.062	1.750	.010	97338-S
21	1.344	1.312	1.281	1.210	.163	.161	.410	.344	.062	1.720	.010	97339-S
22	1.406	1.375	1.344	1.250	.163	.161	.410	.344	.062	1.880	.010	97340-S
24	1.531	1.500	1.469	1.350	.163	.161	.440	.380	.062	1.880	.010	97341-S
26	1.672	1.625	1.578	1.455	.174	.170	.440	.380	.062	2.000	.010	97342-S
28	1.797	1.750	1.703	1.550	.174	.170	.440	.380	.062	2.125	.010	97343-S
30	1.937	1.875	1.812	1.675	.179	.175	.440	.380	.093	2.250	.010	97344-S
31	2.000	1.938	1.875	1.720	.179	.175	.440	.380	.093	2.250	.010	97345-S
32	2.061	2.000	1.939	1.750	.179	.175	.440	.380	.093	2.312	.010	97346-S
34	2.187	2.125	2.062	1.860	.184	.180	.440	.380	.093	2.312	.010	97347-S
35	2.250	2.188	2.125	1.925	.184	.180	.440	.380	.093	2.312	.010	97348-S
36	2.312	2.250	2.187	2.000	.184	.180	.440	.380	.093	2.380	.010	97349-S
38	2.437	2.375	2.312	2.100	.194	.190	.440	.380	.093	2.380	.010	97350-S
40	2.561	2.500	2.439	2.187	.194	.190	.440	.380	.093	2.380	.010	97351-S
42	2.688	2.625	2.562	2.320	.204	.200	.440	.380	.093	2.380	.010	97352-S

NOTES: MATERIAL: Wire Diameter .082-.142 SAE 1080 Steel. Wire Diameter .152-.202 SAE 1065 Steel. Rockwell C53. Recommended Finish S35. Where finish specifications are such that hydrogen embrittlement may occur, parts must receive preventive treatment.
Assemble clamp to "A", "B", and "C" Diameter of gage. At "B" and "C" Diameter a wire of "N" Diameter inserted parallel to axis of the gage shall not pass between gage and clamp. After assembly, the clamp in a relaxed position shall not pass over "D" Diameter of gage.
Size numbers shall be shown on top of ring or on tang. Size number may be preceded by identification letters.
For General Specifications see Page K-950.02. For Finishes see Addendum.

GENERAL SPECIFICATIONS
HOSE CLAMPS

GENERAL: Screw type hose clamps will be supplied in the open position with the nuts retained by staking or other means.

SCREW THREADS: All threads shall be Unified and American Standard UNC or UNF Class 2A or 2B.

TANGENTIAL SCREW, SLOTTED BAND CLAMPS (TYPE B): These clamps are normally manufactured with one slot in sizes up to and including 1-3/16 size; two slots in sizes 1-1/4 through 2-7/8 and three slots in sizes 3" and larger. Widths of slots and tongues shall not be greater than 40% of band width nor less than 30%. Slots shall be centered.

SPRING WIRE CLAMP (TYPE E): The clamp shall be gripped in a vise so that the gripping edge of the vise will coincide with the clamp axis, bisecting the angle between tangs, as illustrated in Figure 1. When the clamp is expanded by moving the free tang to a point where it passes around the stationary tang, there shall be no evidence of fracture. When the free tang is extended beyond the stationary tang until fracture occurs, the clamp shall deliver a tough springy reaction up to the instant of fracture. The structure at the fracture shall be a fine grain.

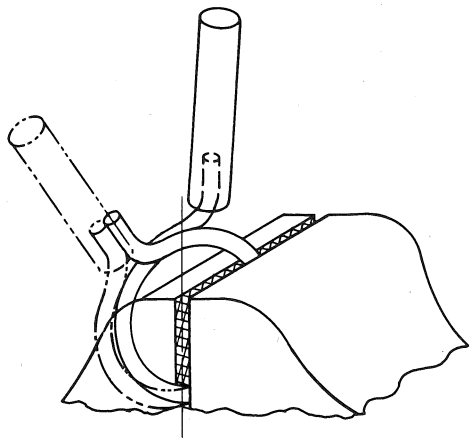

FIGURE 1

Clamps should not be expanded beyond the "A" diameter in application. However, if special circumstances require over-expansion, they may no longer conform to the not-go acceptance requirement because of a permanent set. For every increment of tang movement to expand the clamp beyond the "A" diameter, the relaxed diameter may increase by one-third of the increment.

All clamps shall be free from burrs, seams, laps, loose scale or any other defects that may affect their serviceability.

The specifications in this section were developed without considering whether patents are involved. In all cases, therefore, the supplier shall be required to assume patent liability.

GENERAL SPECIFICATIONS
RETAINING RINGS

INTERNAL RETAINING RINGS - TYPE HB, HD AND HI. Hardness must conform to values specified for the appropriate types in the tables below. After compressing ring five times so that lugs touch but do not overlap, the ring shall not show signs of cracks and must meet either of the following:

(a) Permanent set must not exceed the values in the table below or,

(b) Free diameter must equal or exceed maximum housing groove diameter specified for the individual ring in the tabulated specifications.

INTERNAL TYPE HB - HD - HI				
SAE 1065 - 1090 STEEL		ALLOWABLE SET OF FREE DIAMETER IN COLUMN "D"		
SIZE	HARDNESS	TYPE HB-HD SIZE	PERCENT	
			Not Prestressed	Prestressed
1/4 - 5/16	15N86-88	1/4 - 7/16		3.5
3/8 - 1/2	30N69.5-73	1/2 - 3/4		3.0
9/16 - 3/4	30N67.5-72	13/16 & Over	1.0	3.0
13/16 - 1	30N66-71	TYPE HI SIZE		PER-CENT
1-1/16 - 3	C-47-52			
3-1/16 & Over	C-45-50	3/4 - 1.00		1.5
		1-1/16 & Over		1.3

EXTERNAL RETAINING RINGS - TYPE SB-SD AND SI. Hardness must conform to values specified for the appropriate types in the following table. After expanding ring five times to a diameter 1% greater than nominal shaft diameter, the ring shall not show signs of cracks and must meet either of the following:

(a) Permanent set must not exceed 1% of the ring free diameter given in the tabulated specifications.

(b) Free diameter must be equal to or less than the minimum shaft groove diameter specified in the tabulated specifications.

GENERAL SPECIFICATIONS
RETAINING RINGS

EXTERNAL TYPES SB - SD - SI		
SIZE	SAE 1065- 1090 HARDNESS	M-1567-C COPPER HARDNESS
1/8 - 7/32		15N77-82
1/4 - 15/32	30N69.5-73	
1/2 - 13/16	30N66-71	
7/8 - 1	C-47-53	
1-1/16 - 3-7/16	C-47-52	
3-1/2 & Over	C-45-50	

EXTERNAL RETAINING RINGS - TYPE RB, RD AND RC. Hardness must conform to values specified for the appropriate types in the tables below. The ring shall grip the minimum groove diameter in the tabulated specifications at a minimum of three points. Grip should be such that the ring resists turning easily by hand.

EXTERNAL TYPES RB-RD		EXTERNAL TYPE RC	
SAE 1065-1090 STEEL		SAE 1065-1090 STEEL	
SIZE	HARDNESS	SIZE	HARDNESS
1/16 - 1/8	15N84.5-87	1/8 - 3/16	15N86-88.5
9/64 - 5/16	30N66.5-71	7/32 - 15/32	30N67.5-72
3/8 & Over	C-47-52	1/2 - 13/16	30N66-71
		7/8 & over	C-47-52

GENERAL SPECIFICATIONS
RETAINING RINGS

THICKNESS. For plated rings, maximum thickness may be increased by .002 inch, or an amount equal to the minimum groove width minus .0002 inch, whichever is the smaller. The effect of plating on thickness should be considered when specifying groove location.

FINISHES. Where finish specifications are such that hydrogen embrittlement may occur, parts must receive preventive treatment.

LATERAL DEFORMATION. Lateral deformation includes all projections which will not be sprung into place by a load of 10 lbs. applied to the ring between flat plates. Lateral deformation shall be such that the spacing between the plates does not exceed the minimum groove width shown in the tabulated specifications.

HELIX. The helix of the ring is a uniform slope along the entire circumference of the ring and should not exceed twice the nominal ring thickness.

RADIAL DEFORMATION. Radial deformation is a local variation from the circular shape of the retainer and must not exceed the values shown in the tabulated specification except for types HB-HD-HI-SB-SD and SI which are shown in the following charts.

DEFECTS. Retainer rings shall be free from burrs, rust, pits, and all other defects that may affect their serviceability.

RADIAL DEFORMATION	
TYPE HB-HD-HI SIZE	Max
1/4 - 3/4	.020
13/16 - 1-1/2	.031
1-9/16 - 2-1/2	.062
2-17/32 - 4	.094

RADIAL DEFORMATION	
TYPE SB-SD-SI SIZE	Max
1/8 - 3/4	.016
25/32 - 1-1/2	.031
1-9/16 - 2-1/2	.047
2-9/16 - 4	.078

The specifications in this section were developed without considering whether patents may or may not be involved. In all cases, therefore, the supplier shall be required to assume patent liability.

FORD MOTOR COMPANY
STANDARD PARTS

SECTION L
FITTINGS

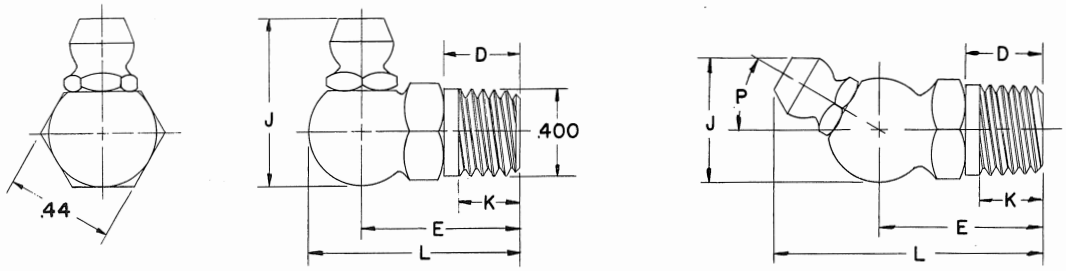

1/8 TAPER PIPE THREAD WITH CHECK VALVE

P	Angle	30°	30°	45°	67 ½°	67 ½°	85°	85°	90°	90°	105°
K	Effective Thd. Length	.19*	.31++	.19*	.19*	.31++	.19*	.31++	.19*	.31++	.25**
D	Shank Length Approx.	.28	1.25	.28	.28	.56	.28	.56	.28	1.25	.31
E	End to Center	.63	1.63	.63	.63	.91	.63	1.63	.63	1.63	.87
J	Overall Height Approx.	.56	.56	.59	.72	.72	.75	.75	.75	.75	.75
L	Overall Length Approx.	1.09	2.09	1.03	.91	1.19	.87	1.87	.87	1.87	1.09
	Ford Part Numbers	87911-S	87912-S	87913-S	87914-S	87915-S	87916-S	87917-S	87918-S	87919-S	87920-S

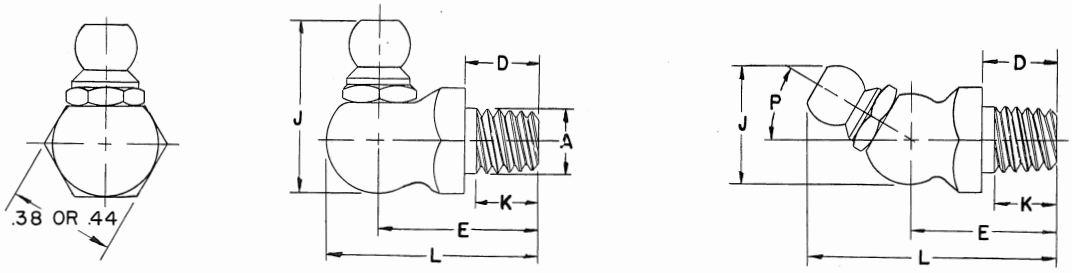

1/4-28 TAPER THREAD

P	Angle	45°	45°	85°	90°
K	Effective Thd. Lgth.	.11	.23	.11	.11
D	Shank Length Approx.	.19	.34	.19	.19
E	End to Center Approx.	.47	.59	.56	.56
J	Overall Height Approx.	.59	.59	.69	.69
A	Shank Diameter	.252	.260	.252	.252
L	Overall Length Approx.	.87	.97	.75	.75
	Ford Part Numbers	87921-S	87922-S	87923-S	87924-S

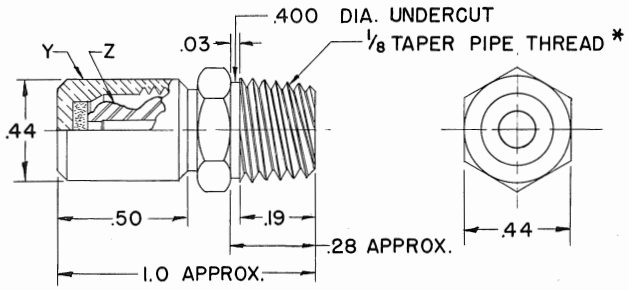

WATER PUMP TYPE

	Y	Z	
	CAP-BRASS	TIP-STEEL	ASSEMBLY
Ford Part Numbers	87925-S	87926-S	87927-S

NOTE:

For General Specifications See Page L 101
For Special Finishes See Page Z1 and Z2.
*P.T.F. Spec. Extra Short **P.T.F. Spec. Short ++N.P.T.F.

LUBRICATION FITTINGS

STANDARD PARTS

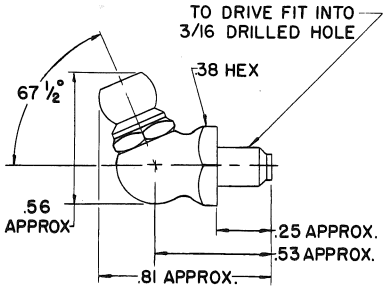

PLAIN SHANK OR SERRATIONS OPTIONAL
-WITH CHECK-VALVE-

Ford Part Number	87928-S

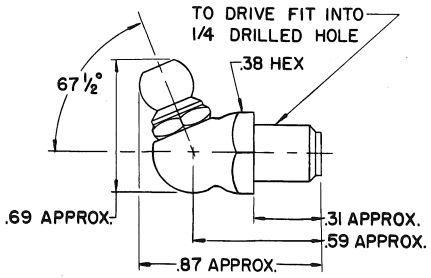

PLAIN SHANK OR SERRATIONS OPTIONAL
-WITH CHECK-VALVE-

Ford Part Number	87929-S

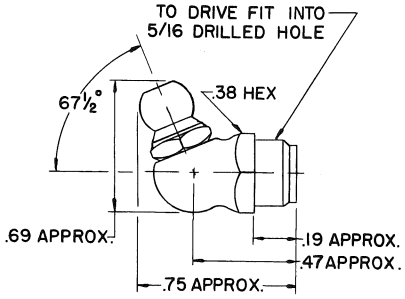

PLAIN SHANK OR SERRATIONS OPTIONAL
-WITH CHECK-VALVE-

Ford Part Number	87930-S

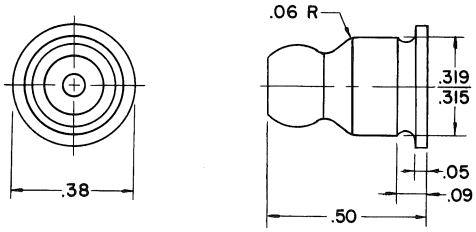

WELSH PLUG BASE

WITH OR WITHOUT CHECK-VALVE

Ford Part Number	87931-S

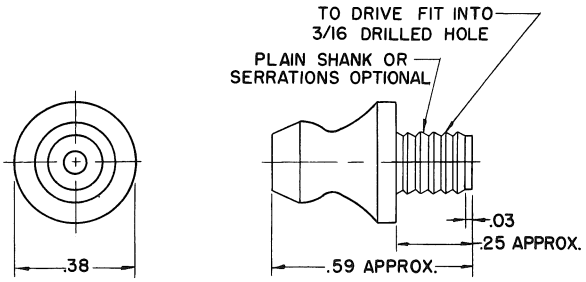

WITH OR WITHOUT CHECK-VALVE

Ford Part Number	87932-S

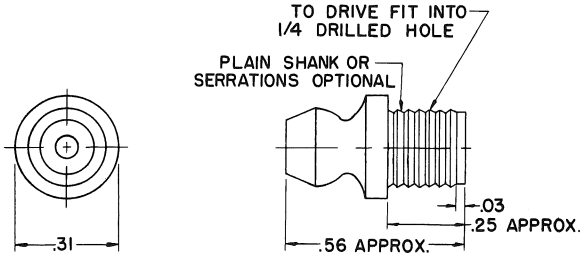

WITH OR WITHOUT CHECK-VALVE

Ford Part Number	87933-S

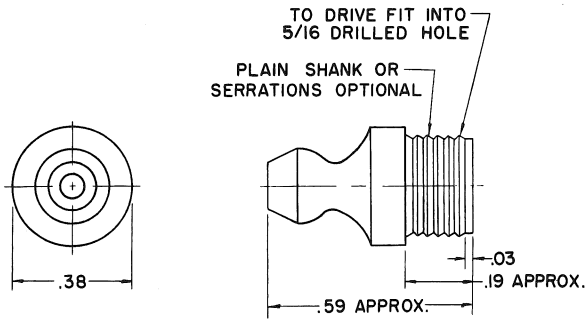

WITH OR WITHOUT CHECK-VALVE

Ford Part Number	87934-S

NOTE:

For General Specifications See Page L 101.
For Special Finishes See Page Z1 and Z2.

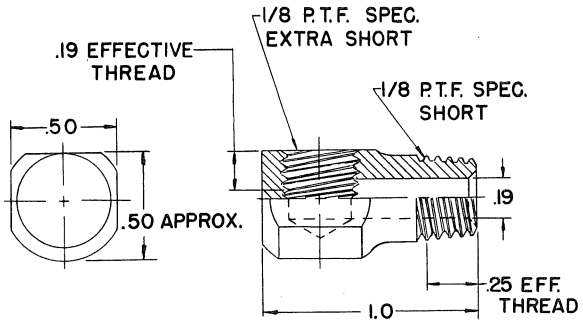

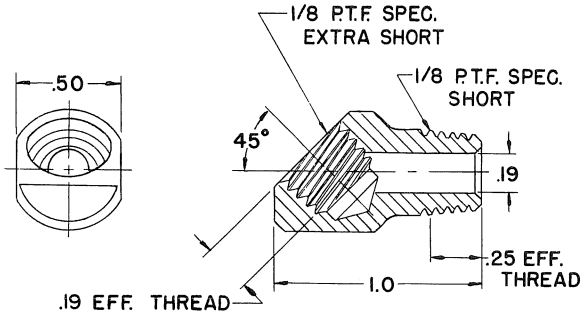

ELBOW ADAPTERS

Ford Part Number	87935-S

Ford Part Number	87936-S

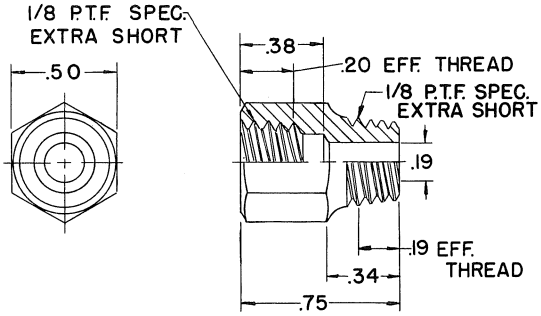

EXTENSION

Ford Part Number	87937-S

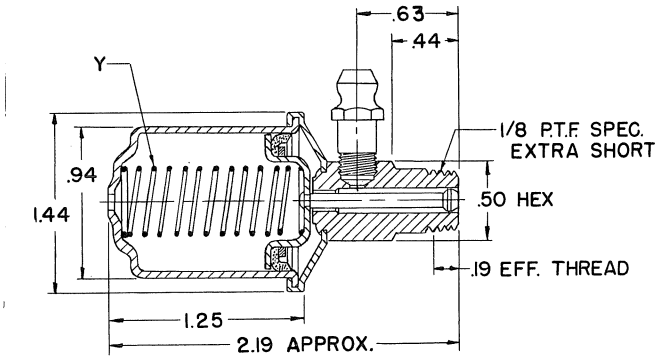

RESERVOIR CUP

Y	Spring Tension	1 LB.	3 LB.	6 LB.
	Ford Part Numbers	87938-S	87939-S	87940-S

NOTE:

For General Specifications See Page L 101
For Special Finishes See Page Z1 and Z2.

PIPE PLUGS

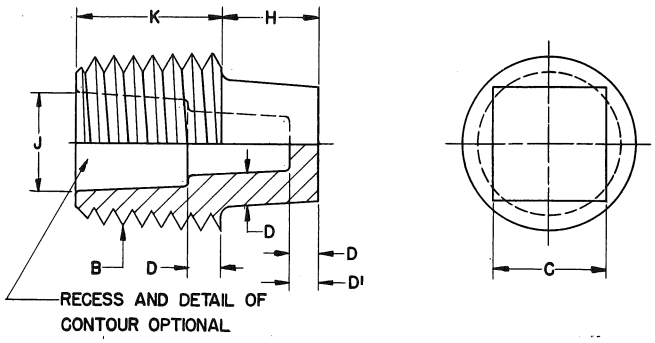

	Dryseal Taper Thread	1/16	1/8	1/4	3/8	1/2	3/4	1
B	Threads per Inch	27	27	18	18	14	14	11-1/2
K	Min. Body Length Max. Body Length	.330 .350	.330 .350	.495 .525	.495 .525	.660 .700	.670 .710	.830 .870
C	Min. Square Size Max. Square Size	.214 .221	.276 .283	.370 .377	.428 .440	.553 .565	.615 .627	.803 .815
H	Min. Head Height Max. Head Height	.178 .193	.240 .255	.280 .300	.310 .335	.380 .410	.440 .470	.500 .540
J	Max. Recess Diameter (1) Max. Recess Diameter (2)				.312 .359	.375 .531	.562 .719	.750 .922
D	Min. Wall Thickness (1) Min. Wall Thickness (2)				.125 .109	.156 .125	.188 .125	.203 .141
D'	Min Wall Thickness (2)				.078	.094	.109	.109

FORD PART NUMBERS

Cast Iron	87600-S	87601-S	87602-S	87603-S	87604-S	87605-S	87606-S
Malleable Iron	87607-S	87608-S	87609-S	87610-S	87611-S	87612-S	87613-S
Steel	87614-S	87615-S	87616-S	87617-S	87618-S	87619-S	87620-S
Brass	87621-S	87622-S	87623-S	87624-S	87625-S	87626-S	87627-S
Bronze	87628-S	87629-S	87630-S	87631-S	87632-S	87633-S	87634-S

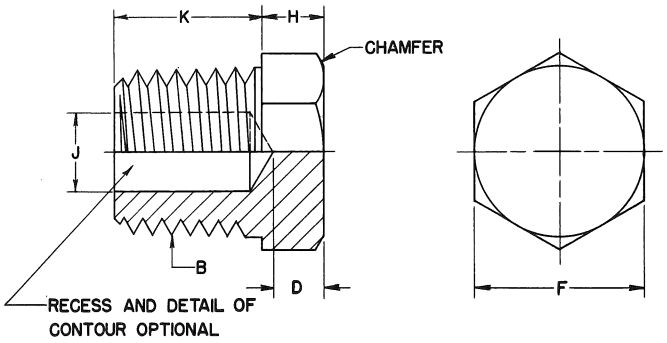

	Dryseal Taper Thread	1/16	1/8	1/4	3/8	1/2	3/4	1
B	Threads per Inch	27	27	18	18	14	14	11-1/2
K	Shoulder Length	.375	.375	.562	.562	.750	.750	.938
F	Min. Hexagon Width Max. Hexagon Width	.304 .315	.428 .440	.551 .565	.674 .690	.860 .877	1.044 1.065	1.292 1.315
H	Min. Hexagon Thickness Max. Hexagon Thickness	.151 .162	.181 .194	.181 .194	.212 .227	.212 .227	.304 .323	.304 .323
J	Max. Recess Diameter				.375	.500	.688	.875
D	Min. Wall Thickness				.156	.156	.188	.188

FORD PART NUMBERS

Cast Iron	87635-S	87636-S	87637-S	87638-S	87639-S	87640-S	87641-S
Malleable Iron	87642-S	87643-S	87644-S	87645-S	87646-S	87647-S	87648-S
Steel	87649-S	87650-S	87651-S	87652-S	87653-S	87654-S	87655-S
Brass	87656-S	87657-S	87658-S	87659-S	87660-S	87661-S	87662-S
Bronze	87663-S	87664-S	87665-S	87666-S	87667-S	87668-S	87669-S

NOTES:
For Finishes and General Specifications See Page L-102. For Special Finishes See Addendum.
(1) Use with Ferrous Metals. (2) Use with Non-Ferrous Metals.

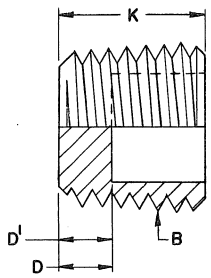

CAST

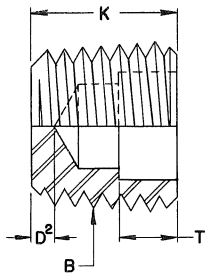

BROACHED

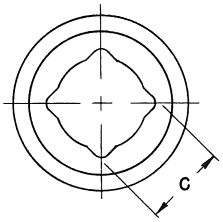

	Dryseal Taper Thread	1/16	1/8	1/4	3/8	1/2	3/4	1
B	Threads per Inch	27	27	18	18	14	14	11-1/2
K	Min. Body Length Max. Body Length	.290 .310	.290 .310	.445 .475	.445 .475	.590 .630	.600 .640	.750 .790
C	Min. Square - Cast Max. Square - Cast				.319 .349	.382 .412	.413 .443	.508 .538
C	Min. Square - Broach Max. Square - Broach	.130 .135	.192 .197	.255 .260	.319 .324	.382 .387	.413 .418	.508 .513
T	Min. Socket Depth	.125	.125	.188	.188	.250	.312	.375
D	Min. Wall Thickness (1)				.125	.156	.188	.203
D'	Min. Wall Thickness (2)				.078	.094	.109	.109
D²	Min. Wall Thickness (3)	.062	.062	.062	.062	.094	.094	.125

FORD PART NUMBERS

Cast Iron				87670-S	87671-S	87672-S	87673-S
Malleable Iron				87674-S	87675-S	87676-S	87677-S
Steel	87678-S	87679-S	87680-S	87681-S	87682-S	87683-S	87684-S
Brass	87685-S	87686-S	87687-S	87688-S	87689-S	87690-S	87691-S
Bronze	87692-S	87693-S	87694-S	87695-S	87696-S	87697-S	87698-S

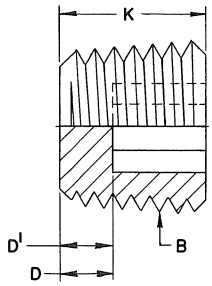

CAST

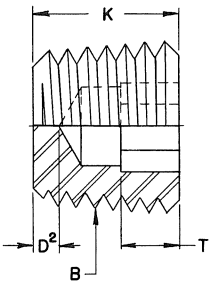

BROACHED

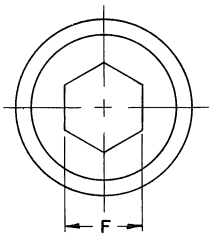

	Dryseal Taper Thread	1/16	1/8	1/4	3/8	1/2	3/4	1
B	Threads per Inch	27	27	18	18	14	14	11-1/2
K	Min. Body Length Max. Body Length	.290 .310	.290 .310	.445 .475	.445 .475	.590 .630	.600 .640	.750 .790
F	Min. Hexagon Width Max. Hexagon Width	.125 .130	.188 .193	.250 .255	.313 .318	.375 .380	.563 .568	.625 .630
T	Min Socket Depth	.125	.125	.188	.188	.250	.312	.375
D	Min. Wall Thickness (1)				.125	.156	.188	.203
D'	Min. Wall Thickness (2)				.078	.094	.109	.109
D²	Min. Wall Thickness (3)	.062	.062	.062	.062	.094	.094	.125

FORD PART NUMBERS

Cast Iron				87699-S	87700-S	87701-S	87702-S
Malleable Iron				87703-S	87704-S	87705-S	87706-S
Steel	87707-S	87708-S	87709-S	87710-S	87711-S	87712-S	87713-S
Brass	87714-S	87715-S	87716-S	87717-S	87718-S	87719-S	87720-S
Bronze	87721-S	87722-S	87723-S	87724-S	87725-S	87726-S	87727-S

NOTES:
For Finishes and General Specifications See Page L-102. For Special Finishes See Addendum.
(1) Use with Cast or Malleable Iron. (2) Use with Cast Brass, Bronze or Aluminum. (3) Use with Steel and/or Broached Hole.

FILLER & DRAIN PLUGS

STANDARD PARTS

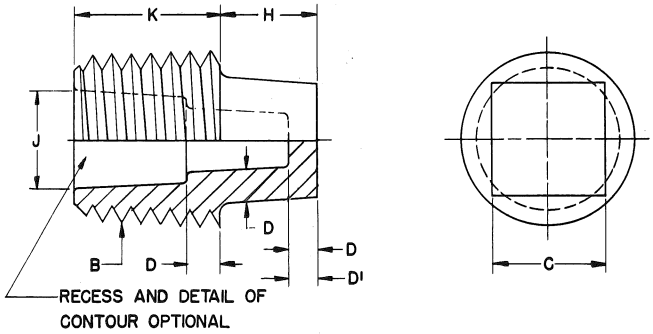

	Dryseal Taper Thread PTF SAE - Short	1/16	1/8	1/4	3/8	1/2	3/4	1
B	Threads per Inch	27	27	18	18	14	14	11-1/2
K	Min. Body Length Max. Body Length	.290 .310	.290 .310	.445 .475	.445 .475	.590 .630	.600 .640	.750 .790
C	Min. Square Max. Square	.214 .221	.276 .283	.370 .377	.428 .440	.553 .565	.615 .627	.803 .815
H	Min. Head Height Max. Head Height	.178 .193	.240 .255	.280 .300	.310 .335	.380 .410	.440 .470	.500 .540
J	Max. Recess Diameter (1) Max. Recess Diameter (2)				.312 .359	.375 .531	.562 .719	.750 .922
D	Min. Wall Thickness (1) Min. Wall Thickness (2)				.125 .109	.156 .125	.188 .125	.203 .141
D'	Min. Wall Thickness (2)				.078	.094	.109	.109

FORD PART NUMBERS

Cast Iron	87728-S	87729-S	87730-S	87731-S	87732-S	87733-S	87734-S
Malleable Iron	87735-S	87736-S	87737-S	87738-S	87739-S	87740-S	87741-S
Steel	87742-S	87743-S	87744-S	87745-S	87746-S	87747-S	87748-S
Brass	87749-S	87750-S	87751-S	87752-S	87753-S	87754-S	87755-S
Bronze	87756-S	87757-S	87758-S	87759-S	87760-S	87761-S	87762-S

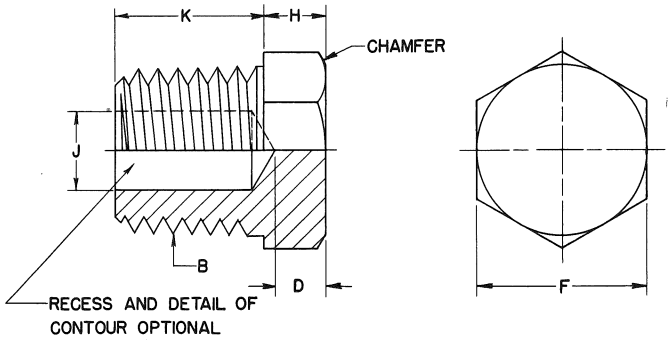

	Dryseal Taper Thread PTF SAE - Short	1/16	1/8	1/4	3/8	1/2	3/4	1
B	Threads per Inch	27	27	18	18	14	14	11-1/2
K	Shoulder Length	.328	.328	.484	.484	.640	.656	.812
F	Min. Hexagon Width Max. Hexagon Width	.304 .315	.428 .440	.551 .565	.674 .690	.860 .877	1.044 1.065	1.292 1.315
H	Min. Hexagon Thickness Max. Hexagon Thickness	.151 .162	.181 .194	.181 .194	.212 .227	.212 .227	.304 .323	.304 .323
J	Max. Recess Diameter				.375	.500	.688	.875
D	Min. Wall Thickness				156	.156	.188	.188

FORD PART NUMBERS

Cast Iron	87763-S	87764-S	87765-S	87766-S	87767-S	87768-S	87769-S
Malleable Iron	87770-S	87771-S	87772-S	87773-S	87774-S	87775-S	87776-S
Steel	87777-S	87778-S	87779-S	87780-S	87781-S	87782-S	87783-S
Brass	87784-S	87785-S	87786-S	87787-S	87788-S	87789-S	87790-S
Bronze	87791-S	87792-S	87793-S	87794-S	87795-S	87796-S	87797-S

NOTES:

For Finishes and General Specifications see Page L-102. For Special Finishes See Addendum.
(1) Use with Ferrous Metals. (2) Use with Non-Ferrous Metals.

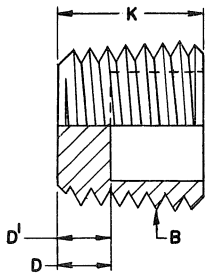

CAST

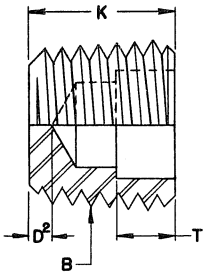

BROACHED

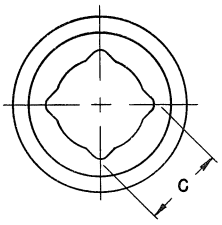

	Dryseal Taper Thread PTF SAE - Short	1/16	1/8	1/4	3/8	1/2	3/4	1
B	Threads per Inch	27	27	18	18	14	14	11-1/2
K	Min. Body Length Max. Body Length	.250 .270	.260 .280	.395 .425	.395 .425	520 .560	.530 .570	.670 .710
C	Min. Square - Cast Max. Square - Cast				.319 .349	.382 .412	.413 443	.508 538
C	Min. Square - Broach Max. Square - Broach	.130 .135	.192 .197	.255 .260	.319 .324	.382 .387	.413 .418	.508 .513
T	Min. Socket Depth	.094	.094	.156	.156	.188	.188	.250
D	Min. Wall Thickness (1)				.125	.156	.188	.203
D'	Min. Wall Thickness (2)				.078	.094	.109	.109
D²	Min. Wall Thickness (3)	.062	.062	.062	.062	.094	.094	.125

FORD PART NUMBERS

Cast Iron				87798-S	87799-S	87800-S	87801-S
Malleable Iron				87802-S	87803-S	87804-S	87805-S
Steel	87806-S	87807-S	87808-S	87809-S	87810-S	87811-S	87812-S
Brass	87813-S	87814-S	87815-S	87816-S	87817-S	87818-S	87819-S
Bronze	87820-S	87821-S	87822-S	87823-S	87824-S	87825-S	87826-S

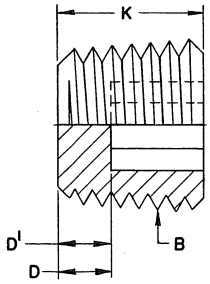

CAST

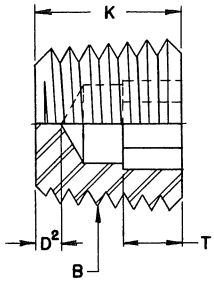

BROACHED

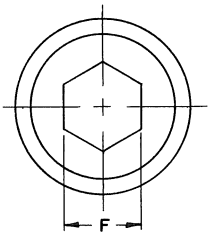

	Dryseal Taper Thread PTF SAE - Short	1/16	1/8	1/4	3/8	1/2	3/4	1
B	Threads per Inch	27	27	18	18	14	14	11-1/2
K	Min. Body Length Max. Body Length	.250 .270	.260 .280	.395 .425	.395 .425	.520 .560	.530 .570	.670 .710
F	Min. Hexagon Width Max. Hexagon Width	.125 .130	.188 .193	.250 .255	.313 .318	.375 .380	.563 .568	.625 .630
T	Min. Socket Depth	.094	.094	.156	.156	.188	.188	.250
D	Min. Wall Thickness (1)				.125	.156	.188	.203
D'	Min. Wall Thickness (2)				.078	.094	.109	.109
D²	Min. Wall Thickness (3)	.062	.062	.062	.062	.094	.094	.125

FORD PART NUMBERS

Cast Iron				87827-S	87828-S	87829-S	87830-S
Malleable Iron				87831-S	87832-S	87833-S	87834-S
Steel	87835-S	87836-S	87837-S	87838-S	87839-S	87840-S	87841-S
Brass	87842-S	87843-S	87844-S	87845-S	87846-S	87847-S	87848-S
Bronze	87849-S	87850-S	87851-S	87852-S	87853-S	87854-S	87855-S

NOTES: For Finishes and General Specifications See Page L-102. For Special Finishes See Addendum.
(1) Use with Cast or Malleable Iron. (2) Use with Cast Brass, Bronze, or Aluminum. (3) Use with Steel and/or Broached Hole.

TUBE FITTINGS
INVERTED FLARED TUBE

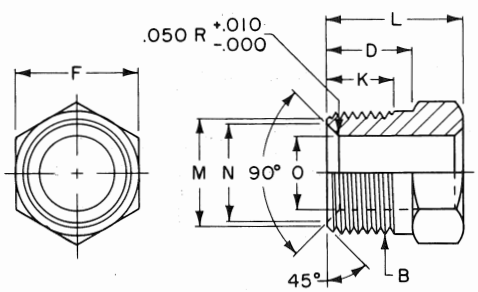

NUTS

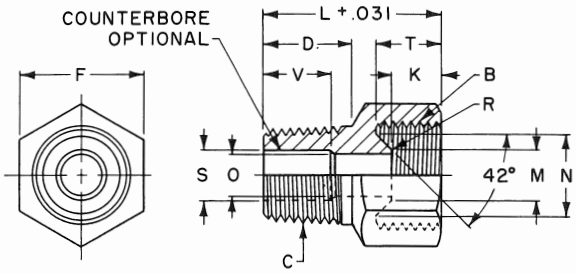

CONNECTORS

NUTS

	Tubing O.D.	1/8	3/16	1/4	5/16	3/8	7/16	1/2	5/8
	Thread Diameter	5/16	3/8	7/16	1/2	5/8	11/16	3/4	7/8
B	Threads per Inch	28	24	24	20	18	18	18	18
	Pitch Diameter	.2849 .2883	.3430 .3468	.4055 .4093	.4619 .4662	.5828 .5875	.6455 .6500	.7079 .7125	.8329 .8375
N	Large Seat Diameter	.221 .225	.268 .272	.331 .335	.393 .397	.487 .491	.550 .554	.612 .616	.737 .741
O	Hole Diameter	.130 .133	.192 .195	.255 .258	.317 .320	.380 .383	.442 .445	.505 .508	.630 .633
D	End to Hexagon	.32	.36	.36	.40	.40	.44	.46	.48
L	Length	.52	.56	.56	.62	.66	.68	.74	.80
M	End Diameter	.246 .261	.301 .316	.363 .378	.415 .430	.533 .548	.595 .610	.658 .673	.783 .798
K	Full Thread Length	.26	.30	.30	.32	.32	.34	.36	.38
F	Hexagon Width	.312	.375	.438	.500	.625	.688	.750	.875
	MATERIAL			FORD PART NUMBERS					
	Steel Brass	87941-S 87949-S	87942-S 87950-S	87943-S 87951-S	87944-S 87952-S	87945-S 87953-S	87946-S 87954-S	87947-S 87955-S	87948-S 87956-S

CONNECTORS

	Tubing O.D.	1/8	3/16	1/4	5/16	5/16	3/8	7/16	1/2
C	Taper Thread (Note a)	1/8	1/8	1/8	1/8	1/4	1/4	1/4	3/8
	Thread Diameter	5/16	3/8	7/16	1/2	1/2	5/8	11/16	3/4
B	Threads per Inch	28	24	24	20	20	18	18	18
	Pitch Diameter	.2893 .2937	.3479 .3528	.4104 .4153	.4675 .4731	.4675 .4731	.5889 .5949	.6514 .6573	.7139 .7199
	Minimum Full Thread	.203	.219	.219	.250	.250	.281	.312	.328
O	Hole Diameter	.078	.125	.188	.219	.219	.281	.344	.406
M	Small Seat Diameter	.104 .108	.151 .155	.214 .218	.276 .280	.276 .280	.342 .346	.405 .409	.467 .471
N	Large Seat Diameter	.216 .220	.263 .267	.326 .330	.388 .392	.388 .392	.482 .486	.545 .549	.607 .611
K	Small Seat Depth	.188	.203	.203	.234	.234	.266	.297	.312
T	Seat Depth	.250	.266	.266	.297	.297	.344	.375	.391
R	Seat Radius	.006	.006	.031	.031	.031	.031	.031	.031
D	Length (Note b)	.375	.375	.375	.375	.562	.562	.562	.562
V	Counterbore Depth	.188	.234	.281		.500	.406		
L	Overall Length (Note b)	.625	.688	.734	.781	.969	1.016	1.062	1.062
S	Counterbore Diameter	.219	.219	.219	.219	.312	.344	.344	.406
F	Hexagon Width	.406	.438	.500	.562	.562	.719	.781	.875
	MATERIAL			FORD PART NUMBERS					
	Steel Brass	87961-S 87969-S	87962-S 87970-S	87963-S 87971-S	87964-S 87972-S	87965-S 87973-S	87966-S 87974-S	87967-S 87975-S	87968-S 87976-S

NOTES: For General Specifications See Page L-103. For Finishes See Addendum.
(a) Dryseal American (National) Standard Taper Pipe Thread unless Engineering specifically authorizes under separate part number the use of SAE Short Dryseal Taper Pipe Thread.
(b) With SAE Short Pipe Thread, dimensions D and L may be reduced in accordance with reduction of pipe thread length. Thread relief undercut optional.

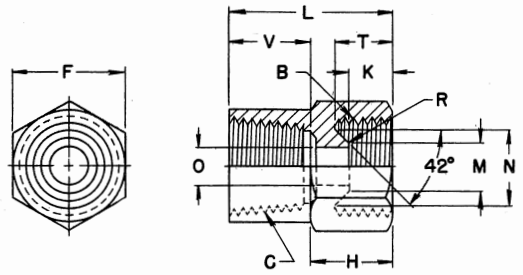

INTERNAL PIPE THREAD CONNECTORS

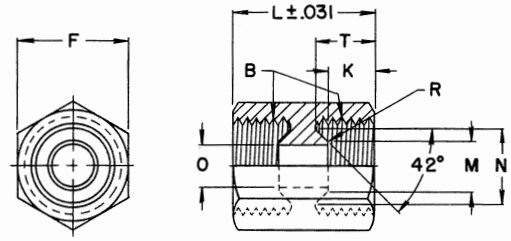

UNIONS

INTERNAL PIPE THREAD CONNECTORS

	Tubing O. D.	1/8	3/16	1/4	5/16	3/8	7/16	1/2
C	Taper Thread (Note a)	1/8	1/8	1/8	1/8	1/4	1/4	3/8
	Thread Diameter	5/16	3/8	7/16	1/2	5/8	11/16	3/4
B	Threads per Inch	28	24	24	20	18	18	18
	Pitch Diameter	.2893 .2937	.3479 .3528	.4104 .4154	.4675 .4731	.5889 .5950	.6514 .6574	.7139 .7199
	Minimum Full Thread	.203	.219	.219	.250	.281	.313	.328
O	Hole Diameter	.078	.125	.189	.219	.281	.344	.406
M	Small Seat Diameter	.104 .108	.151 .155	.214 .218	.276 .280	.342 .346	.405 .409	.467 .471
N	Large Seat Diameter	.216 .220	.263 .267	.326 .330	.388 .392	.482 .486	.545 .549	.607 .611
K	Small Seat Depth	.188	.203	.203	.234	.266	.297	.312
T	Seat Depth	.250	.266	.266	.297	.344	.375	.391
R	Seat Radius	.006	.006	.031	.031	.031	.031	.031
L	Overall Length (Notes b & c)	.719	.750	.750	.781	1.031	1.062	1.094
H	Hexagon Thickness	.344	.375	.375	.406	.469	.500	.531
V	Depth (Notes b & c)	.375	.375	.375	.375	.563	.563	.563
F	Hexagon Width	.500	.500	.500	.563	.719	.781	.875

MATERIAL	FORD PART NUMBERS						
Steel	87980-S	87981-S	87982-S	87983-S	87984-S	87985-S	87986-S
Brass	87987-S	87988-S	87989-S	87990-S	87200-S	87201-S	87202-S

UNIONS

	Tubing O. D.	1/8	3/16	1/4	5/16	3/8	7/16	1/2
	Thread Diameter	5/16	3/8	7/16	1/2	5/8	11/16	3/4
B	Threads per Inch	28	24	24	20	18	18	18
	Pitch Diameter	.2893 .2937	.3479 .3528	.4104 .4154	.4675 .4731	.5889 .5950	.6514 .6574	.7139 .7199
	Minimum Full Thread	.203	.219	.219	.250	.281	.313	.328
O	Hole Diameter	.078	.125	.188	.219	.281	.344	.406
M	Small Seat Diameter	.104 .108	.151 .155	.214 .218	.276 .280	.342 .346	.405 .409	.467 .471
N	Large Seat Diameter	.216 .220	.263 .267	.326 .330	.388 .392	.482 .486	.545 .549	.607 .611
K	Small Seat Depth	.188	.203	.203	.234	.266	.297	.312
T	Seat Depth	.250	.266	.266	.297	.344	.375	.391
R	Seat Radius	.006	.006	.031	.031	.031	.031	.031
L	Overall Length	.563	.625	.625	.719	.797	.875	.906
F	Hexagon Width	.406	.438	.500	.563	.719	.781	.875

MATERIAL	FORD PART NUMBERS						
Steel	87203-S	87204-S	87205-S	87206-S	87207-S	87208-S	87209-S
Brass	87210-S	87211-S	87212-S	87213-S	87214-S	87215-S	87216-S

NOTES: For General Specifications See Page L-103. For Finishes See Addendum.
(a) Dryseal American (National) Standard Taper Pipe Thread unless Engineering specifically authorizes under separate part number the use of SAE Short Dryseal Taper Pipe Thread.
(b) With SAE Short Pipe Thread, dimensions L and V may be reduced in accordance with reduction of pipe thread length.
(c) Tap drill depths given require use of bottoming taps to produce standard full thread length. For increased tap clearance see paragraph "Internal Pipe Threads" in the General Specifications.

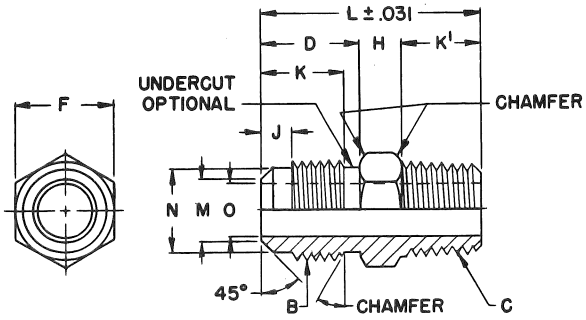

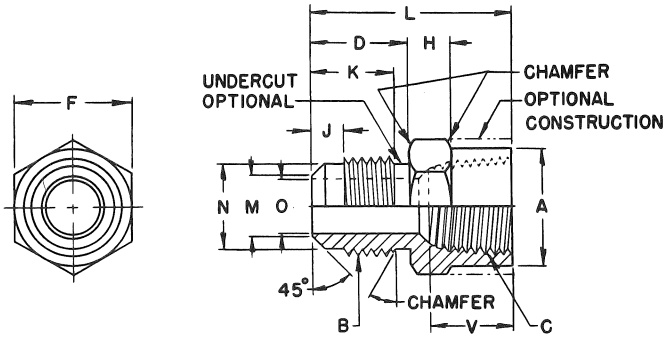

CONNECTORS

INTERNAL PIPE THREAD CONNECTORS

CONNECTORS

	Tubing O. D.	1/8	3/16	1/4	5/16	5/16	3/8	7/16	1/2	5/8	3/4	7/8	1
C	Taper Thread (Note a)	1/8	1/8	1/8	1/8	1/4	1/4	1/4	3/8	1/2	1/2	3/4	1
	Thread Diameter	5/16	3/8	7/16	1/2	1/2	5/8	11/16	3/4	7/8	1 1/16	1 1/4	1 3/8
B	Threads per Inch	24	24	20	20	20	18	16	16	14	14	12	12
	Pitch Diameter	.2806 .2843	.3430 .3468	.3995 .4037	.4619 .4662	.4619 .4662	.5828 .5875	.6407 .6455	.7029 .7079	.8216 .8270	1.0092 1.0145	1.1879 1.1941	1.3127 1.3190
F	Hexagon Width	.438	.438	.438	.500	.562	.625	.688	.750	.875	1.062	1.250	1.375
O	Hole Diameter	.078	.125	.188	.219	.219	.281	.312	.406	.250	.562	.750	.875
M	Diameter	.109	.156	.219	.250	.250	.312	.344	.438	.531	.719	.797	.938
N	Diameter	.234	.297	.344	.406	.406	.531	.578	.641	.750	.938	1.125	1.250
K'	Length (Note b)	.375	.375	.375	.375	.562	.562	.562	.562	.750	.750	.750	.938
H	Hexagon Thickness	.156	.188	.188	.219	.219	.250	.281	.312	.375	.438	.250	.562
D	End to Hexagon	.312	.375	.500	.562	.562	.625	.688	.750	.875	1.000	1.125	1.125
J	Nose Length	.125	.125	.156	.188	.188	.219	.250	.250	.281	.281	.375	.375
K	Min. Full Thread	.234	.297	.406	.469	.469	.516	.562	.625	.734	.859	.953	.969
L	Length (Note b)	.844	.938	1.062	1.156	1.344	1.438	1.531	1.625	2.000	2.188	2.375	2.625

MATERIAL	FORD PART NUMBERS											
STEEL	87217-S	87218-S	87219-S	87220-S	87221-S	87222-S	87223-S	87224-S	87225-S	87226-S	87227-S	87228-S
BRASS	87229-S	87230-S	87231-S	87232-S	87233-S	87234-S	87235-S	87236-S	87237-S	87238-S	87239-S	87240-S

INTERNAL PIPE THREAD CONNECTORS

	Tubing O. D.	1/8	3/16	1/4	5/16	3/8	7/16	1/2	5/8	3/4	7/8	1
C	Taper Thread (Note a)	1/8	1/8	1/8	1/8	1/4	1/4	3/8	1/2	1/2	3/4	1
	Thread Diameter	5/16	3/8	7/16	1/2	5/8	11/16	3/4	7/8	1 1/16	1 1/4	1 3/8
B	Threads per Inch	24	24	20	20	18	16	16	14	14	12	12
	Pitch Diameter	.2806 .2843	.3430 .3468	.3995 .4037	.4619 .4662	.5828 .5875	.6407 .6455	.7029 .7079	.8216 .8270	1.0092 1.0145	1.1879 1.1941	1.3127 1.3190
F	Hexagon Width	.562	.562	.562	.562	.688	.688	.813	1.000	1.062	1.250	1.500
O	Hole Diameter	.078	.125	.188	.219	.281	.312	.406	.500	.625	.750	.875
M	Diameter	.109	.156	.219	.250	.312	.344	.438	.531	.719	.797	.938
N	Diameter	.234	.297	.344	.406	.531	.578	.641	.750	.938	1.125	1.250
H	Hexagon Thickness	.156	.188	.188	.219	.250	.281	.312	.375	.438	.500	.562
D	End to Hexagon	.312	.375	.500	.562	.625	.688	.750	.875	1.000	1.125	1.125
J	Nose Length	.125	.125	.156	.188	.219	.250	.250	.281	.281	.375	.375
K	Min. Full Thread	.234	.297	.406	.469	.516	.562	.625	.734	.859	.953	.969
L	Length (Note b & c)	.844	.938	1.062	1.156	1.312	1.406	1.562	1.812	2.000	2.250	2.438
A	Body Diameter	.562	.562	.562	.562	.688	.688	.813	1.000	1.062	1.250	1.500
V	Depth (Note b & c)	.375	.375	.375	.375	.562	.562	.562	.750	.750	.750	.938

MATERIAL	FORD PART NUMBERS										
STEEL	87241-S	87242-S	87243-S	87244-S	87245-S	87246-S	87247-S	87248-S	87249-S	87250-S	87251-S
BRASS	87252-S	87253-S	87254-S	87255-S	87256-S	87257-S	87258-S	87259-S	87260-S	87261-S	87262-S

NOTES: For Finishes and General Specifications See Page L-103. For Special Finishes See Addendum.
(a) Dryseal American (National) Standard Taper Pipe Thread unless Engineering specifically authorizes under separate part number the use of SAE Short Dryseal Taper Pipe Thread.
(b) With SAE Short Pipe Thread, dimensions K', L, and V may be reduced in accordance with reduction of pipe thread length.
(c) Tap drill depths given require use of bottoming taps to produce standard full thread length. For increased tap clearance see paragraph "Internal Pipe Threads" in the General Specifications.

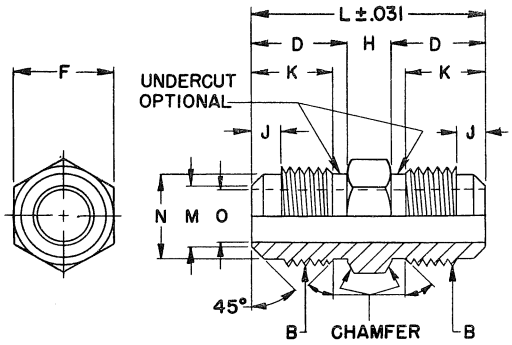

UNIONS

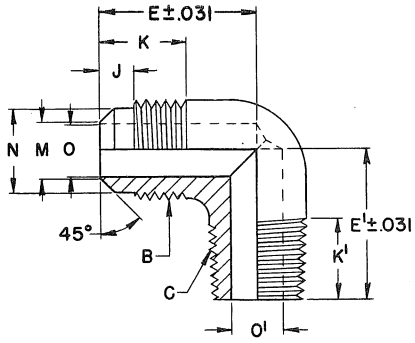

90° ELBOWS

UNIONS

	Tubing O. D.	1/8	3/16	1/4	5/16	3/8	7/16	1/2	5/8	3/4	7/8	1
	Thread Diameter	5/16	3/8	7/16	1/2	5/8	11/16	3/4	7/8	1 1/16	1 1/4	1 3/8
B	Threads per Inch	24	24	20	20	18	16	16	14	14	12	12
	Pitch Diameter	.2806 .2843	.3430 .3468	.3995 .4037	.4619 .4662	.5828 .5875	.6407 .6455	.7029 .7079	.8216 .8270	1.0092 1.0145	1.1879 1.1941	1.3127 1.3190
F	Hexagon Width	.438	.438	.438	.500	.625	.688	.750	.875	1.062	1.250	1.375
O	Hole Diameter	.078	.125	.188	.219	.281	.312	.406	.500	.625	.750	.875
M	Diameter	.109	.156	.219	.250	.312	.344	.438	.531	.719	.797	.938
N	Diameter	.234	.297	.344	.406	.531	.578	.641	.750	.938	1.125	1.250
H	Hexagon Thickness	.156	.188	.188	.219	.250	.281	.312	.375	.438	.500	.562
D	End to Hexagon	.312	.375	.500	.562	.625	.688	.750	.875	1.000	1.125	1.125
J	Nose Length	.125	.125	.156	.188	.219	.250	.250	.281	.281	.375	.375
K	Min. Full Thread	.234	.297	.406	.469	.516	.562	.625	.734	.859	.953	.969
L	Length	.781	.938	1.188	1.344	1.500	1.656	1.812	2.125	2.438	2.750	2.812

MATERIAL	FORD PART NUMBERS										
STEEL	87263-S	87264-S	87265-S	87266-S	87267-S	87268-S	87269-S	87270-S	87271-S	87272-S	87273-S
BRASS	87274-S	87275-S	87276-S	87277-S	87278-S	87279-S	87280-S	87281-S	87282-S	87283-S	87284-S

90° ELBOWS

	Tubing O. D.	1/8	3/16	1/4	5/16	5/16	3/8	7/16	1/2	5/8	3/4	7/8	1
C	Taper Thread (Note a)	1/8	1/8	1/8	1/8	1/4	1/4	1/4	3/8	1/2	1/2	3/4	1
	Thread Diameter	5/16	3/8	7/16	1/2	1/2	5/8	11/16	3/4	7/8	1 1/16	1 1/4	1 3/8
B	Threads per Inch	24	24	20	20	20	18	16	16	14	14	12	12
	Pitch Diameter	.2806 .2843	.3430 .3468	.3995 .4037	.4619 .4662	.4619 .4662	.5828 .5875	.6407 .6455	.7029 .7079	.8216 .8270	1.0092 1.0145	1.1879 1.1941	1.3127 1.3190
O	Hole Diameter	.219	.219	.219	.219	.344	.344	.344	.406	.562	.562	.750	.938
O'	Hole Diameter	.078	.125	.188	.219	.219	.381	.312	.406	.500	.625	.750	.875
M	Diameter	.109	.156	.219	.250	.250	.312	.344	.438	.531	.719	.797	.938
N	Diameter	.234	.297	.344	.406	.406	.531	.578	.641	.750	.938	1.125	1.250
K'	Length (Note b)	.375	.375	.375	.375	.562	.562	.562	.562	.750	.750	.750	.938
J	Nose Length	.125	.125	.156	.187	.187	.219	.250	.250	.281	.281	.375	.375
K	Min. Full Thread	.234	.297	.406	.469	.469	.516	.562	.625	.734	.859	.953	.969
E	End to Center	.625	.750	.875	.938	.938	1.000	1.125	1.188	1.438	1.625	1.750	1.938
E'	End to Center (Note b)	.688	.750	.750	.750	.938	1.062	1.062	1.125	1.375	1.500	1.688	1.938

MATERIAL	FORD PART NUMBERS										
STEEL	87285-S	87286-S	87287-S	87288-S	87289-S	87290-S	87291-S	87292-S	87293-S	87294-S	87295-S	87296-S
BRASS	87297-S	87298-S	87299-S	87300-S	87301-S	87302-S	87303-S	87304-S	87305-S	87306-S	87307-S	87308-S

NOTES: For Finishes and General Specifications See Page L-103. For Special Finishes See Addendum.
(a) Dryseal American (National) Standard Taper Pipe Thread unless Engineering specifically authorizes under separate part number the use of SAE Short Dryseal Taper Pipe Thread.
(b) With SAE Short Pipe Thread, dimensions K^1 and E^1 may be reduced in accordance with reduction of pipe thread length.

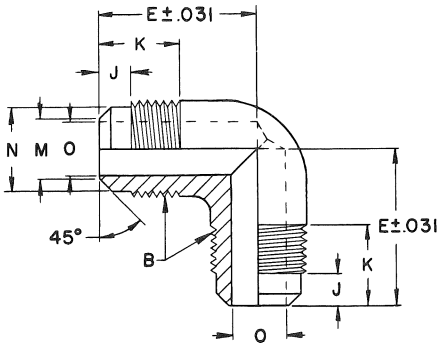

90° ELBOW UNIONS

	Tubing O.D.	1/8	3/16	1/4	5/16	3/8	7/16	1/2	5/8	3/4	7/8	1
	Thread Diameter	5/16	3/8	7/16	1/2	5/8	11/16	3/4	7/8	1 1/16	1 1/4	1 3/8
B	Threads per Inch	24	24	20	20	18	16	16	14	14	12	12
	Pitch Diameter	.2806 .2843	.3430 .3468	.3995 .4037	.4619 .4662	.5828 .5875	.6407 .6455	.7029 .7079	.8216 .8270	1.0092 1.0145	1.1879 1.1941	1.3127 1.3190
O	Hole Diameter	.078	.125	.188	.219	.281	.312	.406	.500	.625	.750	.875
M	Diameter	.109	.156	.219	.250	.312	.344	.438	.531	.719	.797	.938
N	Diameter	.234	.297	.344	.406	.531	.578	.641	.750	.938	1.125	1.250
J	Nose Length	.125	.125	.156	.188	.219	.250	.250	.281	.281	.375	.375
K	Min. Full Thread	.239	.297	.406	.469	.516	.562	.625	.734	.859	.953	.969
E	End to Center	.625	.750	.875	.938	1.000	1.125	1.188	1.438	1.625	1.750	1.938

MATERIAL	FORD PART NUMBERS										
STEEL	87856-S	87857-S	87858-S	87859-S	87860-S	87861-S	87862-S	87863-S	87864-S	87865-S	87866-S
BRASS	87867-S	87868-S	87869-S	87870-S	87871-S	87872-S	87873-S	87874-S	87875-S	87876-S	87877-S

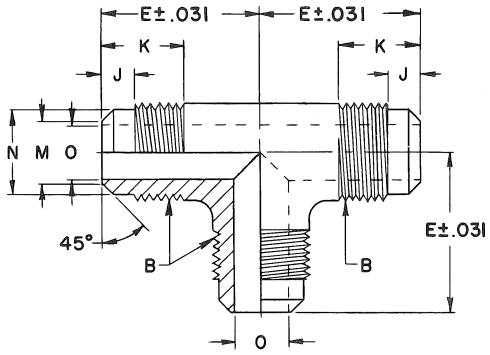

THREE WAY TEES

	Tubing O.D.	1/8	3/16	1/4	5/16	3/8	7/16	1/2	5/8	3/4	7/8	1
	Thread Diameter	5/16	3/8	7/16	1/2	5/8	11/16	3/4	7/8	1 1/16	1 1/4	1 3/8
B	Threads per Inch	24	24	20	20	18	16	16	14	14	12	12
	Pitch Diameter	.2806 .2843	.3430 .3468	.3995 .4037	.4619 .4662	.5828 .5875	.6407 .6455	.7029 .7079	.8216 .8270	1.0092 1.0145	1.1879 1.1941	1.3127 1.3190
O	Hole Diameter	.078	.125	.188	.219	.281	.312	.406	.500	.625	.750	.875
M	Diameter	.109	.156	.219	.250	.312	.344	.438	.531	.719	.797	.938
N	Diameter	.234	.297	.344	.406	.531	.578	.641	.750	.938	1.125	1.250
J	Nose Length	.125	.125	.156	.188	.219	.250	.250	.281	.281	.375	.375
K	Min. Full Thread	.234	.297	.406	.469	.516	.562	.625	.934	.859	.953	.969
E	End to Center	.625	.750	.875	.938	1.000	1.125	1.188	1.438	1.625	1.750	1.938

MATERIAL	FORD PART NUMBERS										
STEEL	87878-S	87879-S	87880-S	87881-S	87882-S	87883-S	87884-S	87885-S	87886-S	87887-S	87888-S
BRASS	87889-S	87890-S	87891-S	87892-S	87893-S	87894-S	87895-S	87896-S	87897-S	87898-S	87899-S

NOTES: For Finishes and General Specifications See Page L-103. For Special Finishes See Addendum.

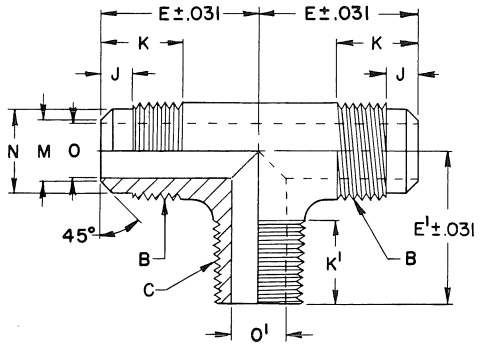

TWO WAY TEES

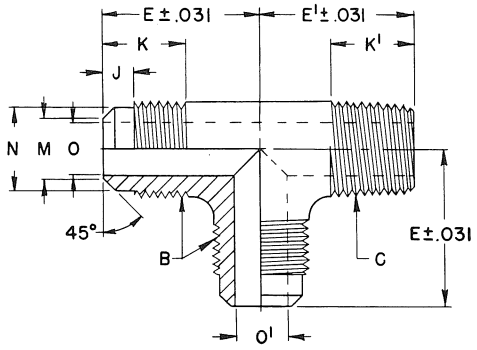

RIGHT ANGLE TWO WAY TEES

TWO WAY TEES

	Tubing O. D.	1/8	3/16	1/4	5/16	5/16	3/8	7/16	1/2	5/8	3/4	7/8	1
C	Taper Thread (Note a)	1/8	1/8	1/8	1/8	1/4	1/4	1/4	3/8	1/2	1/2	3/4	1
	Thread Diameter	5/16	3/8	7/16	1/2	1/2	5/8	11/16	3/4	7/8	1 1/16	1 1/4	1 3/8
B	Threads per Inch	24	24	20	20	20	18	16	16	14	14	12	12
	Pitch Diameter	.2806 .2843	.3430 .3468	.3995 .4037	.4619 .4662	.4619 .4662	.5828 .5875	.6407 .6455	.7029 .7079	.8216 .8270	1.0092 1.0145	1.1879 1.1941	1.3127 1.3190
O	Hole Diameter	.078	.125	.188	.219	.219	.281	.312	.406	.500	.625	.750	.875
O'	Hole Diameter	.219	.219	.219	.219	.281	.344	.344	.406	.562	.562	.750	.938
M	Diameter	.109	.156	.219	.250	.250	.312	.344	.438	.531	.719	.797	.938
N	Diameter	.234	.297	.344	.406	.406	.531	.578	.641	.750	.938	1.125	1.250
K'	Length (Note b)	.375	.375	.375	.375	.562	.562	.562	.562	.750	.750	.750	.938
J	Nose Length	.125	.125	.156	.188	.188	.219	.250	.250	.281	.281	.375	.375
K	Min. Full Thread	.234	.297	.406	.469	.469	.516	.562	.625	.734	.859	.953	.969
E	End to Center	.625	.750	.875	.938	.938	1.000	1.125	1.188	1.438	1.625	1.750	1.938
E'	End to Center (Note b)	.688	.750	.750	.750	.938	1.062	1.062	1.125	1.375	1.500	1.688	1.938

MATERIAL	FORD PART NUMBERS											
STEEL	87309-S	87310-S	87311-S	87312-S	87313-S	87314-S	87315-S	87316-S	87317-S	87318-S	87319-S	87320-S
BRASS	87321-S	87322-S	87323-S	87324-S	87325-S	87326-S	87327-S	87328-S	87329-S	87330-S	87331-S	87332-S

RIGHT ANGLE TWO WAY TEES

	Tubing O. D.	1/8	3/16	1/4	5/16	5/16	3/8	7/16	1/2	5/8	3/4	7/8	1
C	Taper Thread (Note a)	1/8	1/8	1/8	1/8	1/4	1/4	1/4	3/8	1/2	1/2	3/4	1
	Thread Diameter	5/16	3/8	7/16	1/2	1/2	5/8	11/16	3/4	7/8	1 1/16	1 1/4	1 3/8
B	Threads per Inch	24	24	20	20	20	18	16	16	14	14	12	12
	Pitch Diameter	.2806 .2843	.3430 .3468	.3995 .4037	.4619 .4662	.4619 .4662	.5828 .5875	.6407 .6455	.7029 .7079	.8216 .8270	1.0092 1.0145	1.1879 1.1941	1.3127 1.3190
O	Hole Diameter	.078	.125	.188	.219	.219	.281	.312	.406	.500	.562	.750	.875
O'	Hole Diameter	.078	.125	.188	.219	.219	.281	.312	.406	.500	.625	.750	.875
M	Diameter	.109	.156	.219	.250	.250	.312	.344	.438	.531	.719	.797	.938
N	Diameter	.234	.297	.344	.406	.406	.531	.578	.641	.750	.938	1.125	1.250
K'	Length (Note b)	.375	.375	.375	.375	.562	.562	.562	.562	.750	.750	.750	.938
J	Nose Length	.125	.125	.156	.188	.188	.219	.250	.250	.281	.281	.375	.375
K	Min. Full Thread	.234	.297	.406	.469	.469	.516	.562	.625	.734	.859	.953	.969
E	End to Center	.625	.750	.875	.938	.938	1.000	1.125	1.188	1.438	1.625	1.750	1.938
E'	End to Center (Note b)	.688	.750	.750	.750	.938	1.062	1.062	1.125	1.375	1.500	1.688	1.938

MATERIAL	FORD PART NUMBERS											
STEEL	87333-S	87334-S	87335-S	87336-S	87337-S	87338-S	87339-S	87340-S	87341-S	87342-S	87343-S	87344-S
BRASS	87345-S	87346-S	87347-S	87348-S	87349-S	87350-S	87351-S	87352-S	87353-S	87354-S	87355-S	87356-S

NOTES: For Finishes and General Specifications See Page L-103. For Special Finishes See Addendum.
(a) Dryseal American (National) Standard Taper Pipe Thread unless Engineering specifically authorizes under separate part number the use of SAE Short Dryseal Taper Pipe Thread.
(b) With SAE Short Pipe Thread, dimensions K^1 and E^1 may be reduced in accordance with reduction of pipe thread length.

TUBE FITTINGS

INVERTED FLARED TUBE

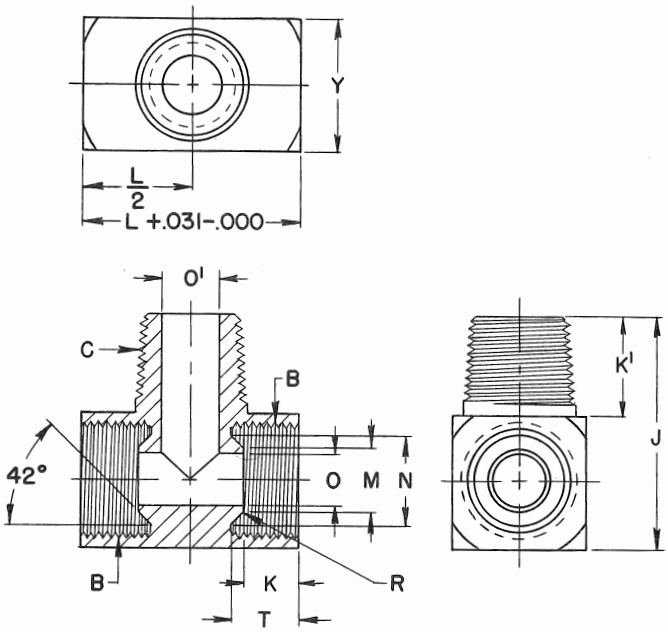

TWO WAY TEES

	Tubing O. D.	1/8	3/16	1/4	5/16	3/8	7/16	1/2
C	Taper Thread (Note a)	1/8	1/8	1/8	1/8	1/4	1/4	3/8
	Thread Diameter	5/16	3/8	7/16	1/2	5/8	11/16	3/4
B	Threads per Inch	28	24	24	20	18	18	18
	Pitch Diameter	.2893 .2937	.3479 .3528	.4104 .4153	.4675 .4731	.5889 .5949	.6514 .6573	.7139 .7199
K	Seat Depth	.188	.203	.203	.234	.266	.297	.312
	Minimum Full Thread	.204	.219	.219	.250	.281	.313	.328
M	Small Seat Diameter	.104 .108	.151 .155	.214 .218	.276 .280	.342 .346	.405 .409	.467 .471
N	Large Seat Diameter	.216 .220	.263 .267	.326 .330	.388 .392	.482 .486	.545 .549	.607 .611
O	Hole Diameter	.078	.125	.188	.219	.281	.344	.406
T	Seat Depth	.250	.266	.266	.297	.344	.375	.391
R	Seat Radius	.006	.006	.031	.031	.031	.031	.031
K'	Length (Note b)	.375	.375	.375	.375	.562	.562	.562
L	Overall Length	.781	.812	.812	.938	1.125	1.188	1.312
O'	Hole Diameter	.219	.219	.219	.219	.344	.344	.406
J	Overall Height (Note b)	.781	.812	.875	.938	1.250	1.312	1.406
Y	Width	.406	.438	.500	.562	.688	.750	.844

MATERIAL	FORD PART NUMBERS						
STEEL	87357-S	87358-S	87359-S	87360-S	87361-S	87362-S	87363-S
BRASS	87364-S	87365-S	87366-S	87367-S	87368-S	87369-S	87370-S

NOTES: For Finishes and General Specifications See Page L-103. For Special Finishes See Addendum.
(a) Dryseal American (National) Standard Taper Pipe Thread unless Engineering specifically authorizes under separate part number the use of SAE Short Dryseal Taper Pipe Thread.
(b) With SAE Short Pipe Thread, dimensions K1 and J may be reduced in accordance with reduction of pipe thread length.

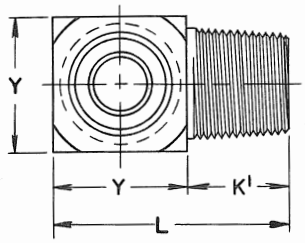

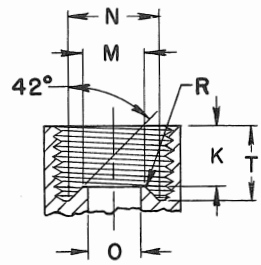

DETAIL OF SEAT

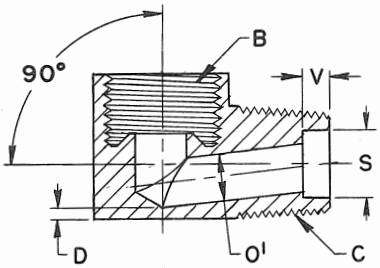

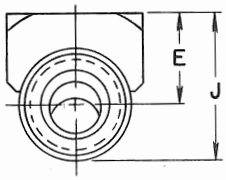

90° ELBOWS

	Tubing O. D.	1/8	3/16	1/4	5/16	5/16	3/8	7/16	1/2
C	Taper Thread (Note a)	1/8	1/8	1/8	1/8	1/4	1/4	1/4	3/8
	Thread Diameter	5/16	3/8	7/16	1/2	1/2	5/8	11/16	3/4
B	Threads per Inch	28	24	24	20	20	18	18	18
	Pitch Diameter	.2893 .2937	.3479 .3528	.4104 .4153	.4675 .4731	.4675 .4731	.5889 .5949	.6514 .6573	.7139 .7199
	Minimum Full Thread	.203	.219	.219	.250	.250	.281	.313	.328
O	Hole Diameter	.078	.125	.188	.219	.219	.281	.344	.406
M	Small Seat Diameter	.104 .108	.151 .155	.214 .218	.276 .280	.276 .280	.342 .346	.405 .409	.467 .471
N	Large Seat Diameter	.216 .220	.263 .267	.326 .330	.388 .392	.388 .392	.482 .486	.545 .549	.607 .611
K	Small Seat Depth	.188	.203	.203	.234	.234	.266	.297	.312
T	Seat Depth	.250	.266	.266	.297	.297	.344	.375	.391
R	Seat Radius	.006	.006	.031	.031	.031	.031	.031	.031
K'	Length (Note b)	.375	.375	.375	.375	.562	.562	.562	.562
V	Counterbore Depth	.250	.156	.094	.094	.500	.109		.156
L	Overall Length (Note b)	.781	.812	.875	.938	1.156	1.250	1.312	1.406
E	Center to End Height	.203	.266	.328	.406	.453	.453	.531	.531
S	Counterbore Diameter	.219	.250	.250	.250	.312	.344		.469
J	Height	.406	.469	.538	.609	.750	.734	.812	.875
D	Wall Thickness	.031	.031	.031	.047	.188	.031	.047	.031
O'	Hole Diameter	.078	.116	.177	.203	.219	.272	.328	.391
Y	Width	.406	.438	.500	.562	.594	.688	.750	.844

MATERIAL	FORD PART NUMBERS							
Steel	87371-S	87372-S	87373-S	87374-S	87375-S	87376-S	87377-S	87378-S
Brass	87379-S	87380-S	87381-S	87382-S	87383-S	87384-S	87385-S	87386-S

NOTES: For General Specifications See Page L-103. For Finishes See Addendum.

(a) Dryseal American (National) Standard Taper Pipe Thread unless Engineering specifically authorizes under separate part number the use of SAE Short Dryseal Taper Pipe Thread.

(b) With SAE Short Pipe Thread, dimensions K^1 and L may be reduced in accordance with reduction of pipe thread length.

TUBE FITTINGS

FLARED TUBE

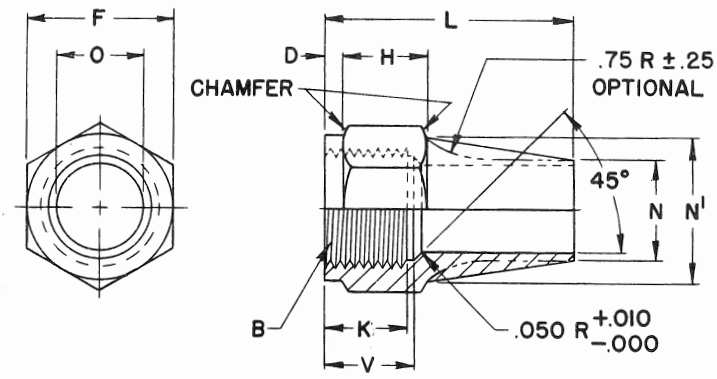

NUTS

	Tubing O. D.	1/8	3/16	1/4	5/16	3/8	7/16	1/2	5/8	3/4	7/8	1
	Thread Diameter	5/16	3/8	7/16	1/2	5/8	11/16	3/4	7/8	1 1/16	1 1/4	1 3/8
B	Threads per Inch	24	24	20	20	18	16	16	14	14	12	12
	Pitch Diameter	.2854 .2902	.3479 .3528	.4050 .4104	.4675 .4731	.5889 .5949	.6469 .6531	.7094 .7159	.8286 .8356	1.0161 1.0230	1.1959 1.2039	1.3299 1.3291
F	Hexagon Width	.375	.438	.562	.625	.750	.812	.875	1.062	1.250	1.500	1.625
O	Hole Diameter	.130 .135	.192 .197	.255 .260	.317 .322	.380 .385	.442 .447	.505 .510	.630 .635	.755 .760	.880 .885	1.005 1.010
N	Boss Dia. Small	.250	.312	.375	.438	.500	.562	.625	.750	.875	1.062	1.188
N'	Boss Dia. Large	.375	.438	.562	.625	.750	.812	.875	1.062	1.250	1.500	1.625
D	Hexagon to End	.094	.094	.125	.125	.125	.125	.125	.125	.125	.125	.125
H	Hexagon Thickness	.125	.188	.250	.312	.375	.438	.500	.625	.750	.875	.875
K	Full Thread Length	.156	.219	.281	.312	.375	.406	.469	.594	.688	.688	.688
V	Tap Drill Length	.219	.281	.344	.375	.438	.469	.531	.656	.781	.781	.812

LONG NUTS

L	Length	3/4	13/16	15/16	1 1/8	1 5/16	1 1/2	1 5/8	1 7/8	2 3/16	2 5/16	2 1/2

MATERIAL	FORD PART NUMBERS										
STEEL	87387-S	87388-S	87389-S	87390-S	87391-S	87392-S	87393-S	87394-S	87395-S	87396-S	87397-S
BRASS	87398-S	87399-S	87400-S	87401-S	87402-S	87403-S	87404-S	87405-S	87406-S	87407-S	87408-S

SHORT NUTS

L	Length	1/2	5/8	3/4	7/8	1	1 1/16	1 1/8	1 5/16	1 1/2	1 5/8	1 13/16

MATERIAL	FORD PART NUMBERS										
STEEL	87409-S	87410-S	87411-S	87412-S	87413-S	87414-S	87415-S	87416-S	87417-S	87418-S	87419-S
BRASS	87420-S	87421-S	87422-S	87423-S	87424-S	87425-S	87426-S	87427-S	87428-S	87429-S	87430-S

NOTES: For Finishes and General Specifications See Page L-103. For Special Finishes See Addendum.

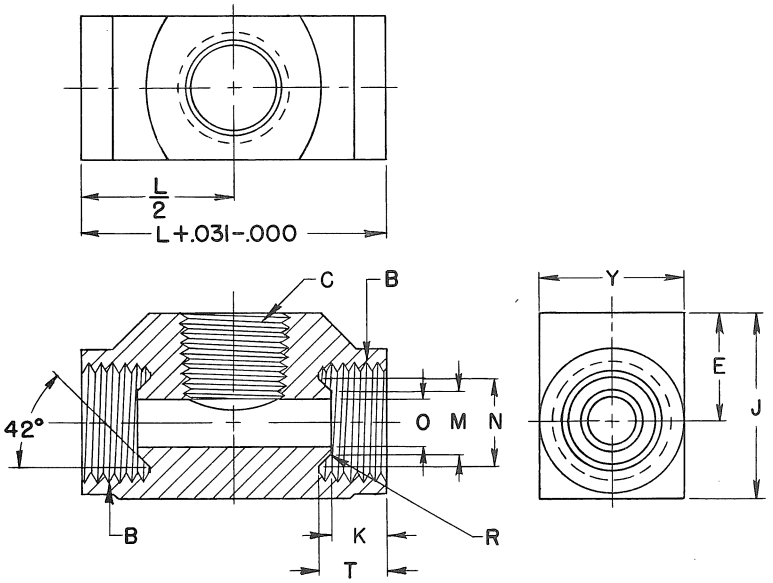

INTERNAL PIPE THREAD TWO WAY TEES

	Tubing O. D.	1/8	3/16	1/4	5/16	3/8	7/16	1/2	5/8	3/4
C	Taper Thread (Note a)	1/8	1/8	1/8	1/8	1/4	1/4	3/8	1/2	3/4
	Thread Diameter	5/16	3/8	7/16	1/2	5/8	11/16	3/4	7/8	1 1/16
B	Threads per Inch	28	24	24	20	18	18	18	18	16
	Pitch Diameter	.2893 .2937	.3479 .3528	.4104 .4153	.4675 .4731	.5889 .5949	.6514 .6573	.7139 .7199	.8389 .8449	1.0219 1.0284
	Minimum Full Thread	.203	.219	.219	.250	.281	.313	.328	.344	.406
O	Hole Diameter	.078	.125	.188	.219	.281	.344	.406	.531	.625
M	Small Seat Diameter	.104 .108	.151 .155	.214 .218	.276 .280	.342 .346	.405 .409	.467 .471	.592 .596	.703 .708
N	Large Seat Diameter	.216 .220	.263 .267	.326 .330	.388 .392	.482 .486	.545 .549	.607 .611	.732 .736	.900 .905
K	Small Seat Depth	.188	.203	.203	.234	.266	.297	.312	.328	.359
T	Seat Depth	.250	.266	.266	.297	.344	.375	.391	.406	.469
R	Seat Radius	.006	.006	.031	.031	.031	.031	.031	.031	.031
L	Overall Length	1.094	1.094	1.125	1.125	1.469	1.625	1.750	1.938	2.250
E	Center to Top (Note c)	.391	.391	.422	.453	.562	.625	.672	.750	.875
J	Overall Height (Note c)	.625	.625	.688	.750	.938	1.031	1.125	1.281	1.500
Y	Width	.500	.500	.531	.594	.750	.812	.906	1.062	1.250

MATERIAL	FORD PART NUMBERS								
Steel	87431-S	87432-S	87433-S	87434-S	87435-S	87436-S	87437-S	87438-S	87439-S
Brass	87440-S	87441-S	87442-S	87443-S	87444-S	87445-S	87446-S	87447-S	87448-S

NOTES: For General Specifications See Page L-103. For Finishes See Addendum.

(a) Dryseal American (National) Standard Taper Pipe Thread unless Engineering specifically authorizes under separate part number the use of SAE Short Dryseal Taper Pipe Thread.

(c) Dimensions E and J do not allow minimum tap drill depth required for bottoming taps to produce standard full thread length. For increased tap clearance see paragraph "Internal Pipe Threads" in General Specifications.

TUBE FITTINGS

INVERTED FLARED TUBE
HEAVY SERIES

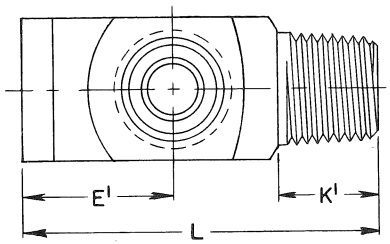

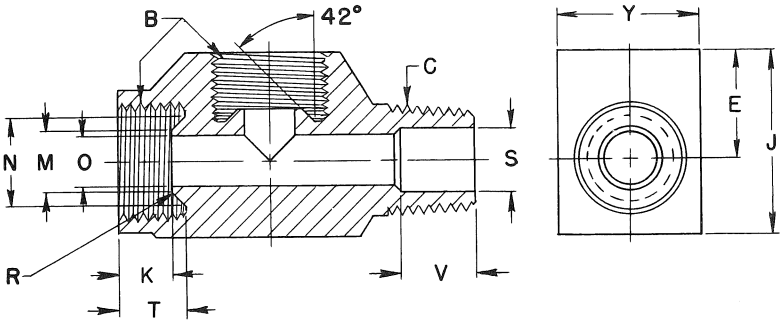

RIGHT ANGLE TWO WAY TEES

	Tubing O. D.	1/8	3/16	1/4	5/16	3/8	7/16	1/2	5/8	3/4
C	Taper Thread (Note a)	1/8	1/8	1/8	1/8	1/4	1/4	3/8	1/2	3/4
	Thread Diameter	5/16	3/8	7/16	1/2	5/8	11/16	3/4	7/8	1 1/16
B	Threads per Inch	28	24	24	20	18	18	18	18	16
	Pitch Diameter	.2893 .2937	.3479 .3528	.4104 .4153	.4675 .4731	.5889 .5949	.6514 .6573	.7139 .7199	.8389 .8449	1.0219 1.0284
	Minimum Full Thread	.203	.219	.219	.250	.281	.313	.328	.344	.406
O	Hole Diameter	.078	.125	.188	.219	.281	.344	.406	.531	.625
M	Small Seat Diameter	.104 .108	.151 .155	.214 .218	.276 .280	.342 .346	.405 .409	.467 .471	.592 .596	.703 .708
N	Large Seat Diameter	.216 .220	.263 .267	.326 .330	.388 .392	.482 .486	.545 .549	.607 .611	.732 .736	.900 .905
K	Small Seat Depth	.188	.203	.203	.234	.266	.297	.312	.328	.359
T	Seat Depth	.250	.266	.266	.297	.344	.375	.391	.406	.469
R	Seat Radius	.006	.006	.031	.031	.031	.031	.031	.031	.031
K'	Length (Note b)	.375	.375	.375	.375	.562	.562	.562	.750	.750
V	Counterbore Depth	.375	.375							
L	Overall Length (Note b)	1.156	1.250	1.312	1.406	1.812	1.875	2.000	2.375	2.625
E	Center to Top	.328	.391	.422	.453	.562	.625	.672	.750	.875
E'	End to Center	.469	.531	.562	.625	.750	.812	.875	.969	1.125
S	Counterbore Diameter	.188	.188							
J	Overall Height	.531	.625	.688	.750	.938	1.031	1.125	1.281	1.500
Y	Width & Diameter	.406	.469	.531	.594	.750	.812	.906	1.062	1.250

MATERIAL	FORD PART NUMBERS								
Steel	87449-S	87450-S	87451-S	87452-S	87453-S	87454-S	87455-S	87456-S	87457-S
Brass	87458-S	87459-S	87460-S	87461-S	87462-S	87463-S	87464-S	87465-S	87466-S

NOTES: For General Specifications See Page L-103. For Finishes See Addendum.
(a) Dryseal American (National) Standard Taper Pipe Thread unless Engineering specifically authorizes under separate part number the use of SAE Short Dryseal Taper Pipe Thread.
(b) With SAE Short Pipe Thread, dimensions K' and L May be reduced in accordance with reduction of pipe thread length.

INVERTED FLARED TUBE
HEAVY SERIES

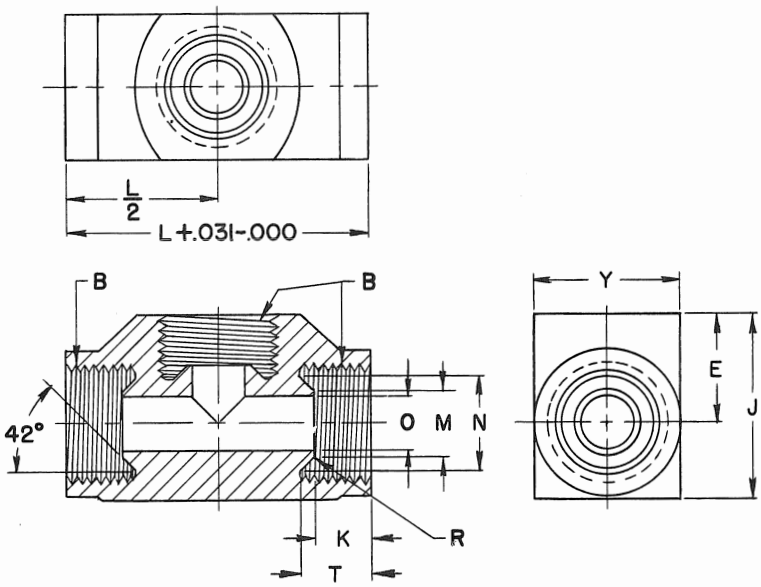

THREE WAY TEES

	Tubing O. D.	1/8	3/16	1/4	5/16	3/8	7/16	1/2	5/8	3/4
	Thread Diameter	5/16	3/8	7/16	1/2	5/8	11/16	3/4	7/8	1 1/16
B	Threads per Inch	28	24	24	20	18	18	18	18	16
	Pitch Diameter	.2893 .2937	.3479 .3528	.4104 .4153	.4675 .4731	.5889 .5949	.6514 .6573	.7139 .7199	.8389 .8449	1.0219 1.0284
	Min. Full Thread	.203	.219	.219	.250	.281	.313	.328	.344	.406
O	Hole Diameter	.078	.125	.188	.219	.281	.344	.406	.531	.625
M	Small Seat Diameter	.104 .108	.151 .155	.214 .218	.276 .280	.342 .346	.405 .409	.467 .471	.592 .596	.703 .708
N	Large Seat Diameter	.216 .220	.263 .267	.326 .330	.388 .392	.482 .486	.545 .549	.607 .611	.732 .736	.900 .905
K	Small Seat Depth	.188	.203	.203	.234	.266	.297	.312	.328	.359
T	Seat Depth	.250	.266	.266	.297	.344	.375	.391	.406	.469
R	Seat Radius	.006	.006	.031	.031	.031	.031	.031	.031	.031
L	Overall Length	.938	1.094	1.125	1.250	1.469	1.625	1.750	1.938	2.250
E	Center to Top	.328	.391	.422	.453	.562	.625	.672	.750	.875
J	Overall Height	.531	.625	.688	.750	.938	1.031	1.125	1.281	1.500
Y	Width & Diameter	.406	.469	.531	.594	.750	.812	.906	1.062	1.250

MATERIAL	FORD PART NUMBERS								
Steel	87467-S	87468-S	87469-S	87470-S	87471-S	87472-S	87473-S	87474-S	87475-S
Brass	87476-S	87477-S	87478-S	87479-S	87480-S	87481-S	87482-S	87483-S	87484-S

NOTES: For General Specifications See Page L-103. For Finishes See Addendum.

TUBE FITTINGS

INVERTED FLARED TUBE
HEAVY SERIES

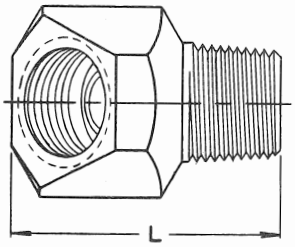

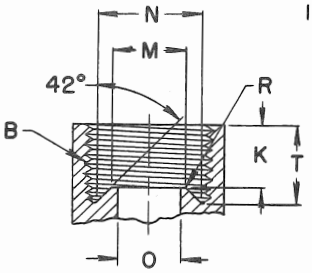

DETAIL OF SEAT

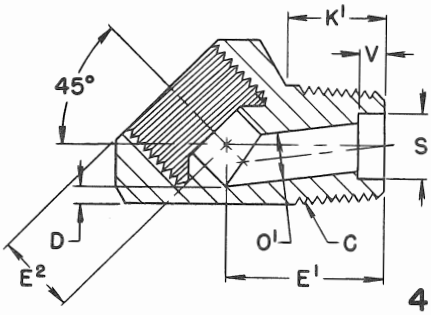

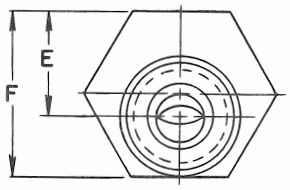

45° ELBOWS

	Tubing O. D.	1/8	3/16	1/4	5/16	3/8	7/16	1/2	5/8	3/4
C	Taper Thread (Note a)	1/8	1/8	1/8	1/8	1/4	1/4	3/8	1/2	3/4
	Thread Diameter	5/16	3/8	7/16	1/2	5/8	11/16	3/4	7/8	1 1/16
B	Threads per Inch	28	24	24	20	18	18	18	18	16
	Pitch Diameter	.2893 .2937	.3479 .3528	.4104 .4153	.4675 .4731	.5889 .5949	.6514 .6573	.7139 .7199	.8389 .8449	1.0219 1.0284
	Minimum Full Thread	.203	.219	.219	.250	.281	.313	.328	.344	.406
O	Hole Diameter	.078	.125	.188	.219	.281	.344	.406	.531	.625
M	Small Seat Diameter	.104 .108	.151 .155	.214 .218	.276 .280	.342 .346	.405 .409	.467 .471	.592 .596	.703 .708
N	Large Seat Diameter	.216 .220	.263 .267	.326 .330	.388 .392	.482 .486	.545 .549	.607 .611	.732 .736	.900 .905
K	Small Seat Depth	.188	.203	.203	.234	.266	.297	.312	.328	.359
T	Seat Depth	.250	.266	.266	.297	.344	.375	.391	.406	.469
R	Seat Radius	.006	.006	.031	.031	.031	.031	.031	.031	.031
K'	Length (Note b)	.375	.375	.375	.375	.562	.562	.562	.750	.750
V	Counterbore Depth	.094	.094	.094		.094	.094	.094	.188	.250
L	Overall Length (Note b)	.812	.875	.938	1.000	1.344	1.406	1.438	1.750	2.000
S	Counterbore Diameter	.250	.250	.250		.344	.344	.469	.562	.688
D	Wall Thickness	.078	.062	.047	.094	.047	.031	.062	.062	.078
O'	Hole Diameter	.125	.156	.188	.203	.281	.312	.375	.500	.625
F	Width	.500	.531	.562	.625	.781	.812	.875	1.062	1.312
E	Center to Top	.297	.328	.359	.422	.500	531	.531	.641	.781
E'	End to Center (Note b)	.516	.547	.578	.563	.844	.859	.906	1.094	1.219
E²	End to Center	.219	.250	.266	.344	.375	.406	.375	.453	.500

MATERIAL	FORD PART NUMBERS								
Steel	87485-S	87486-S	87487-S	87488-S	87489-S	87490-S	87491-S	87492-S	87493-S
Brass	87494-S	87495-S	87496-S	87497-S	87498-S	87499-S	87500-S	87501-S	87502-S

NOTES: For General Specifications See L-103. For Finishes See Addendum.
(a) Dryseal American (National) Standard Taper Pipe Thread unless Engineering Specifically authorizes under separate part number the use of SAE Short Dryseal Taper Pipe Thread.
(b) With SAE Short Pipe Thread, dimensions K^1, L and E^1 may be reduced in accordance with reduction of pipe thread length.

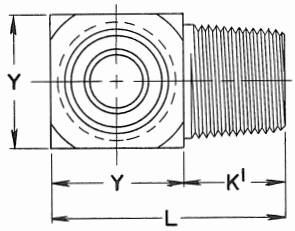

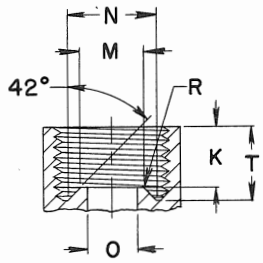

DETAIL OF SEAT

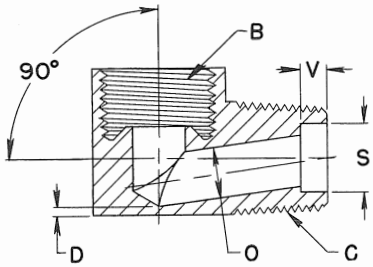

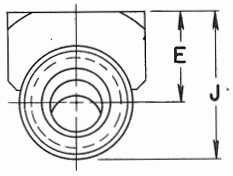

90° ELBOWS

	Tubing O. D.	3/16	1/4	5/16	3/8	7/16	1/2	5/8	3/4
C	Taper Thread (Note a)	1/8	1/8	1/8	1/4	1/4	3/8	1/2	3/4
	Thread Diameter	3/8	7/16	1/2	5/8	11/16	3/4	7/8	1-1/16
B	Threads per Inch	24	24	20	18	18	18	18	16
	Pitch Diameter	.3479 .3528	4104 .4153	.4675 .4731	.5889 .5949	.6514 .6573	.7139 .7199	.8389 .8449	1.0219 1.0284
	Minimum Full Thread	.219	.219	.250	.281	.313	.328	.344	.406
O	Hole Diameter	.125	.188	.219	281	.344	.406	.531	.625
M	Small Seat Diameter	.151 .155	.214 .218	276 .280	.342 .346	.405 .409	.467 .471	.592 .596	.703 .708
N	Large Seat Diameter	.263 .267	.326 .330	.388 .392	.482 .486	.545 .549	.607 .611	.732 .736	.900 .905
K	Small Seat Depth	.203	.203	.234	.266	.297	.312	.328	.359
T	Seat Depth	.266	.266	.297	.344	.375	.391	.406	.469
R	Seat Radius	.006	.031	.031	.031	.031	.031	.031	.031
K'	Length (Note b)	.375	.375	.375	.562	.562	.562	.750	.750
V	Counterbore Depth	.094	.094				.156	.219	.312
L	Overall Length (Note b)	.844	.906	.969	1.312	1.406	1.469	1.812	2.000
E	Center to Top	.266	.328	.469	.531	.594	.594	.672	.750
S	Counterbore Diameter	.250	.250				.469	.594	.750
J	Overall Height	.469	.531	.672	.812	.875	.938	1.109	1.281
D	Wall Thickness	.031	.031	.047	.031	.047	.031	.047	.047
Y	Width	.469	.531	.594	.750	.844	.906	1.062	1.250

MATERIAL	FORD PART NUMBERS							
STEEL	87504-S	87505-S	87506-S	87507-S	87508-S	87509-S	87510-S	87511-S
BRASS	87513-S	87514-S	87515-S	87516-S	87517-S	87518-S	87519-S	87520-S

NOTES:
For General Specifications See Page L-103. For Finishes See Addendum.
(a) Dryseal American (National Standard Taper Pipe Thread unless Engineering specifically authorizes under separate part number the use of SAE Short Dryseal Taper Pipe Thread.
(b) With SAE Short Pipe Thread, dimensions K^1 and L may be reduced in accordance with reduction of pipe thread length.

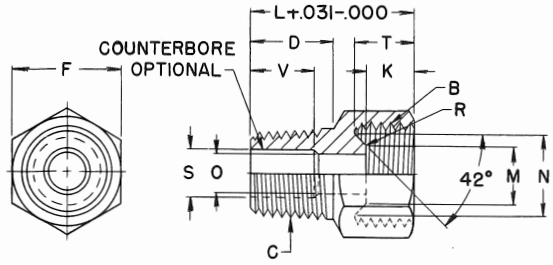

CONNECTORS

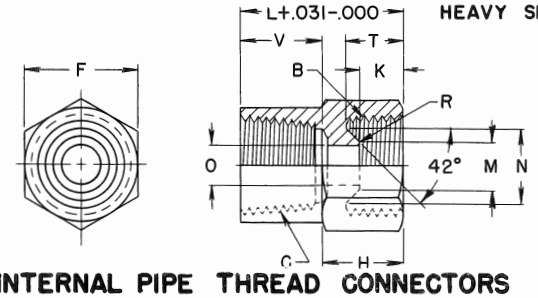

INTERNAL PIPE THREAD CONNECTORS

CONNECTORS

	Tubing O. D.	3/16	1/4	5/16	3/8	7/16	1/2	5/8	3/4
C	Taper Thread (Note a)	1/8	1/8	1/8	1/4	1/4	3/8	1/2	3/4
	Thread Diameter	3/8	7/16	1/2	5/8	11/16	3/4	7/8	1-1/16
B	Threads per Inch	24	24	20	18	18	18	18	16
	Pitch Diameter	.3479 .3528	.4104 .4153	.4675 .4731	.5889 .5949	.6514 .6573	.7139 .7199	.8389 .8449	1.0219 1.0284
	Minimum Full Thread	.219	.219	.250	.281	.313	.328	.344	.406
O	Hole Diameter	.125	.188	.219	.281	.344	.406	.531	.625
M	Small Seat Diameter	.151 .155	.214 .218	.276 .280	.342 .346	.405 .409	.467 .471	.592 .596	.703 .708
N	Large Seat Diameter	.263 .267	.326 .330	.388 .392	.482 .486	.545 .549	.607 .611	.732 .736	.900 .905
K	Small Seat Depth	.203	.203	.234	.266	.297	.312	.328	.359
T	Seat Depth	.266	.266	.297	.344	.375	.391	.406	.469
R	Seat Radius	.006	.031	.031	.031	.031	.031	.031	.031
D	Length (Note b)	.375	.375	.375	.562	.562	.562	.750	.750
V	Counterbore Depth	.234	.281		.406			.531	.531
L	Overall Length (Note b)	.688	.734	.781	1.016	1.047	1.062	1.312	1.375
S	Counterbore Diameter	.219	.219	.219	.344	.344	.406	.594	.750
F	Hexagon Width	.469	.531	.594	.750	.812	.906	1.062	1.250

MATERIAL	FORD PART NUMBERS							
STEEL	87522-S	87523-S	87524-S	87525-S	87526-S	87527-S	87528-S	87529-S
BRASS	87531-S	87532-S	87533-S	87534-S	87535-S	87536-S	87537-S	87538-S

INTERNAL PIPE THREAD CONNECTORS

	Tubing O. D.	1/4	5/16	3/8	7/16	1/2	3/8	3/4
C	Taper Thread (Note a)	1/8	1/8	1/4	1/4	3/8	1/2	3/4
	Thread Diameter	7/16	1/2	5/8	11/16	3/4	7/8	1-1/16
B	Threads per Inch	24	20	18	18	18	18	16
	Pitch Diameter	.4104 .4153	.4675 .4731	.5889 .5949	.6514 .6573	.7139 .7199	.8389 .8449	1.0219 1.0284
	Minimum Full Thread	.219	.250	.281	.313	.328	.344	.406
O	Hole Diameter	.188	.219	.381	.344	.406	.531	.625
M	Small Seat Diameter	.214 .218	.276 .280	.342 .346	.405 .409	.467 .471	.592 .596	.703 .708
N	Large Seat Diameter	.326 .330	.388 .392	.482 .486	.545 .549	.607 .611	.732 .736	.900 .905
K	Small Seat Depth	.203	.234	.266	.297	.312	.328	.359
T	Seat Depth	.266	.297	.344	.375	.391	.406	.469
R	Seat Radius	.031	.031	.031	.031	.031	.031	.031
L	Overall Length (Note b)	.750	.781	1.031	1.062	1.094	1.312	1.500
H	Hexagon Thickness	.375	.406	.469	.500	.531	.562	.688
V	Tap Drill Depth (Notes b-c)	.375	.375	.562	.562	.562	.750	.844
F	Hexagon Width	.531	.594	.750	.812	.906	1.062	1.250

MATERIAL	FORD PART NUMBERS						
STEEL	87541-S	87542-S	87543-S	87544-S	87545-S	87546-S	87547-S
BRASS	87550-S	87551-S	87552-S	87553-S	87554-S	87555-S	87556-S

NOTES: For Finishes and General Specifications See Page L-103. For Special Finishes See Addendum.
(a) Dryseal American (National) Standard Taper Pipe Thread unless Engineering specifically authorizes under separate part number the use of SAE Short Dryseal Taper Pipe Thread.
(b) With SAE Short Pipe Thread, dimensions D, L and V may be reduced in accordance with reduction of pipe thread length.
(c) Tap Drill depths given require use of bottoming taps to produce standard full thread length. For increased tap clearance see paragraph "Internal Pipe Threads" in the General Specifications.

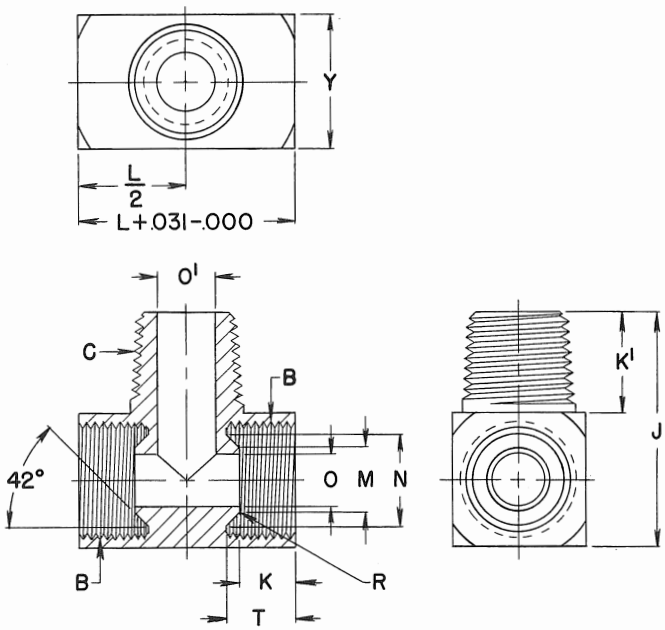

TWO WAY TEES

	Tubing O. D.	3/16	1/4	5/16	3/8	7/16	1/2	5/8	3/4
C	Taper Thd. (Note a)	1/8	1/8	1/8	1/4	1/4	3/8	1/2	3/4
	Thread Diameter	3/8	7/16	1/2	5/8	11/16	3/4	7/8	1-1/16
B	Threads per Inch	24	24	20	18	18	18	18	16
	Pitch Diameter	.3479 .3528	.4104 .4153	.4675 .4731	.5889 .5949	.6514 .6573	.7139 .7199	.8389 .8449	1.0219 1.0284
	Minimum Full Thread	.219	.219	.250	.281	.313	.328	.344	.406
O	Hole Diameter	.125	.188	.219	.281	.344	.406	.531	.625
O'	Hole Diameter	.219	.219	.219	.344	.344	.406	.562	.750
M	Small Seat Diameter	.151 .155	.214 .218	.276 .280	.342 .346	.405 .409	.467 .471	.592 .596	.703 .708
N	Large Seat Diameter	.263 .267	.326 .330	.388 .392	.482 .486	.545 .549	.607 .611	.732 .736	.900 .905
K	Small Seat Depth	.203	.203	.234	.266	.297	.312	.328	.359
T	Seat Depth	.266	.266	.297	.344	.375	.391	.406	.469
R	Seat Radius	.006	.031	.031	.031	.031	.031	.031	.031
K'	Length (Note b)	.375	.375	.375	.562	.562	.562	.750	.750
L	Overall Length	.812	.844	.938	1.156	1.219	1.375	1.562	1.812
J	Overall Ht. (Note b)	.844	.906	.969	1.312	1.375	1.469	1.812	2.000
Y	Width	.469	.531	.594	.750	.812	.906	1.062	1.250

MATERIAL	FORD PART NUMBERS							
STEEL	87558-S	87559-S	87560-S	87561-S	87562-S	87563-S	87564-S	87565-S
BRASS	87567-S	87568-S	87569-S	87570-S	87571-S	87572-S	87573-S	87574-S

NOTES: For Finishes and General Specifications See Page L-103. For Special Finishes See Addendum.
(a) Dryseal American (National) Standard Taper Pipe Thread unless Engineering specifically authorizes under separate part number the use of SAE Short Dryseal Taper Pipe Thread.
(b) With SAE Short Pipe Thread, dimensions J and K^1 may be reduced in accordance with reduction of pipe thread length.

TUBE FITTINGS

INVERTED FLARED TUBE
HEAVY SERIES

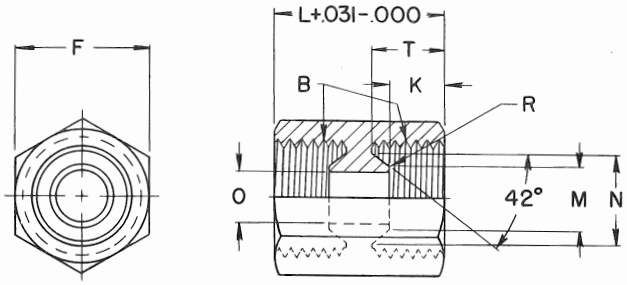

UNIONS

	Tubing O. D.	1/8	3/16	1/4	5/16	3/8	7/16	1/2	5/8	3/4
	Thread Diameter	5/16	3/8	7/16	1/2	5/8	11/16	3/4	7/8	1 1/16
B	Threads per Inch	28	24	24	20	18	18	18	18	16
	Pitch Diameter	.2893 .2937	.3479 .3528	.4104 .4153	.4675 .4731	.5889 .5949	.6514 .6573	.7139 .7199	.8389 .8449	1.0219 1.0284
	Minimum Full Thread	.203	.219	.219	.250	.281	.313	.328	.344	.406
O	Hole Diameter	.078	.125	.188	.219	.281	.344	.406	.531	.625
M	Small Seat Diameter	.104 .108	.151 .155	.214 .218	.276 .280	.342 .346	.405 .409	.467 .471	.592 .596	.703 .708
N	Large Seat Diameter	.216 .220	.263 .267	.326 .330	.388 .392	.482 .486	.545 .549	.607 .611	.732 .736	.900 .905
K	Small Seat Depth	.188	.203	.203	.234	.266	.297	.312	.328	.359
T	Seat Depth	.250	.266	.266	.297	.344	.375	.391	.406	.469
R	Seat Radius	.006	.006	.031	.031	.031	.031	.031	.031	.031
L	Overall Length	.594	.625	.625	.703	.797	.875	.906	.969	1.125
F	Hexagon Width	.500	.500	.531	.594	.750	.812	.906	1.062	1.250

MATERIAL	FORD PART NUMBERS								
STEEL	87582-S	87583-S	87584-S	87585-S	87586-S	87587-S	87588-S	87589-S	87590-S
BRASS	87591-S	87592-S	87593-S	87594-S	87595-S	87596-S	87597-S	87598-S	87599-S

NOTES: For Finishes and General Specifications See Page L-103. For Special Finishes See Addendum.

These specifications apply to all SAE Lubrication Fittings, and in respect to pipe threads, to parts into which fittings assemble.

PIPE THREADS: The pipe threads, unless there is specific authorization to the contrary, shall conform with Dryseal American (National) Standard Taper Pipe Threads except for varying lengths of thread, related gaging tolerance and form of crest. Experience has shown that the crest of the threads on lubrication fittings, intended for use with grease, does not have to conform to Dryseal American (National) Standard Form to function satisfactorily. The thread crests may have greater maximum truncation due to manufacturing practices. These deviations are not advisable in any other application of pipe thread practice. Specifications for Pipe Threads are given in detail in the SAE Standards for Dryseal Pipe Threads.

External pipe threads shall be chamfered 45° to .010 below the minor diameter.
Internal pipe threads shall be chamfered 45° to .010 above the major diameter.

Related specifications covering blank sizes, blind hole depths, pipe taps, chasers, drilled holes, gages, etc. are shown in the SAE Standard for Dryseal Pipe Threads.

EXTERNAL PIPE THREADS: Although the Dryseal American (National) Standard Taper Thread (NPTF) is standard practice for external threads assembling with full length internal taper pipe threads, the shoulder length and full thread length of external threaded fittings in the preceding tables are based on manufacturers' practice which shortens the full thread length and shoulder length to the minimum required for economy of manufacture or for customer needs. Therefore, the full thread lengths specified in the SAE Dryseal Pipe Thread Standards do not apply. The above described deviations from standard practice are peculiar to the parts produced by the lubrication fitting industry. The deviation is not advisable in any other application of pipe thread practice.

EXTERNAL PIPE THREAD TERMINOLOGY: Dryseal American (National) External Taper Pipe Thread (NPTF) is Standard full thread length with gaging tolerance as specified in the SAE Dryseal Pipe Thread Standard.
Dryseal SAE Short External Taper Pipe Thread is shortened one thread at the small end with gaging tolerance as specified in SAE Dryseal Pipe Thread Standard.
Dryseal Special Short External Taper Pipe Thread is shortened one thread at the small end and also one thread at the large end and is gaged the same as SAE Short, using thin ring gage only.

Dryseal Special Extra Short External Taper Pipe Thread is shortened one thread at the small end and also two threads at the large end and is gaged 1-3/4 to 3-1/4 turns engagement for 1/8 inch size, using special thin ring gage with one half pitch (thread) ground off large end and rechamfered.

INTERNAL PIPE THREADS: Although the Dryseal American (National) Standard Taper Pipe Thread (NPTF) produced by the full length Dryseal American (National) Standard Taper Pipe Tap is standard practice for internal threads assembling with full length external taper pipe threads, the tap drill depths and overall lengths for internal threaded fittings, in the preceding tables are based on manufacturers' practice which shortens the full thread length and tap drill depth to the minimum required for short thread bottoming taps. Therefore, the full thread lengths and hole depths specified and the taps specified in the SAE Dryseal Pipe Thread Standards do not apply. The above described deviations from standard practice are peculiar to the parts produced by the lubrication fitting industry. The deviation is not advisable in any other application of pipe thread practice.

INTERNAL PIPE THREAD TERMINOLOGY: Dryseal American (National) Internal Taper Pipe Thread (NPTF) is standard full thread length with gaging tolerance as specified in the SAE Dryseal Pipe Thread Standard. When used with lubrication Fittings which have external thread with shorter length of full thread than SAE Short, the internal thread should be held closer than standard tolerance toward the minimum P.D.

Dryseal SAE Short Internal Taper Pipe Thread is shortened one thread at the large end with gaging tolerance as specified in the SAE Dryseal Pipe Thread Standard. When used with lubrication fittings which have external thread at small end gaged similar to SAE Short, the internal thread and/or the external thread should be held closer than standard tolerance; the internal thread toward the maximum P.D. and the external thread toward the minimum P.D. to provide a minimum of one turn hand engagement.

Dryseal Special Short Internal Taper Pipe Thread is shortened one thread at the large end and also one thread at the small end and is gaged the same as SAE Short.

Dryseal Special Extra Short Internal Taper Pipe Thread is shortened one thread at the large end and also two threads at the small end and is gaged the same as SAE Short.

STRAIGHT INTERNAL PIPE THREADS: Straight internal pipe threads for assembly with External taper pipe thread on lubrication fittings should be tapped with Dryseal (National) Fuel Straight Pipe Taps (NPSF). This tap, having been adjusted on 1/8 and 1/4 inch sizes to obtain threads for hand engagement and wrench take-up proportionate to all other sizes, supersedes the American Grease Fitting Tap. When used with lubrication fittings which have external thread at small end gaged similar to SAE Short, the internal thread gaging should be held closer than standard tolerance, toward the maximum P.D., to provide a minimum of one turn hand engagement.

1/4-28 TAPER THREADS: External Taper thread shall be American (National) Form Thread 1/4-28 with 3/4 taper on diameter per foot, P.D. .2257 plus zero minus .0033 tolerance measured at start of thread at small end. Straight internal thread for assembly with external taper thread on lubrication fittings should be tapped with 1/4-28 NF straight thread tap to Class 2 pitch diameter tolerance and 75% minimum thread height.

STRAIGHT THREADS (EXTERNAL AND INTERNAL): American (National) Standard Form shall be used. The pitch diameter tolerance shall be class 2.

External threads shall be chamfered 45° to .010 below minor diameter.
Internal threads shall be chamfered 45° to .010 above minor diameter.

THREAD LENGTH DEFINITIONS: Full or perfect thread length is the distance from the start of the thread to the last thread which is perfect at crest and root.

Effective thread length includes the full or perfect threads plus the threads perfect at the root but imperfect at the crest, such as obtained on standard O.D. pipe and with commercial drill sizes.

Total thread length includes the effective thread length plus thread run out from die or chaser for external threads or imperfect threads from tap chamfer for internal threads.

MATERIAL AND MANUFACTURE: Fittings shall be brass or steel unless otherwise specified on drawing or by Engineering. The greasing end of steel fittings shall be cyanided or otherwise hardened sufficiently to resist scoring by guns or couplers and damage from stones.

SERVICE: All fitting tip dimensions and contours shall be optional except that the design shall be such that fittings are readily serviced with conventional standard hydraulic grip-type couplers in the field.

DIMENSIONS AND TOLERANCE: Dimensions apply to finished parts, plated, hardened or otherwise processed as specified by Engineering. Tolerances on dimensions not otherwise limited shall be plus or minus 1/64 inch. Dimensions marked "approx." shall be limited to plus 1/16 inch.

DEFECTS: Fittings shall be free from burrs, loose scale, sharp edges, eccentricity of diameters and all other defects which affect their serviceability.

THREAD SERIES IDENTIFICATION SYMBOLS: The identification symbols which have been adopted to designate the various thread series are:

THREAD SERIES:	SYMBOL
American National Taper Pipe Thread	NPT
American National Internal Straight Pipe Thread in Pipe Couplings	NPSC
American National Taper Pipe Thread for Dryseal Pressure-Tight Joints	NPTF
American National Fuel Internal Straight Pipe Thread for Dryseal Pressure-Tight Joints	NPSF
American National Intermediate Internal Straight Pipe Thread for Dryseal Pressure-Tight Joints	NPSI
American National Straight Pipe Thread for Mechanical Joints	NPSM
American National Straight Pipe Thread for Locknuts	NPSL
SAE Short Taper Pipe Thread for Dryseal Pressure-Tight Joints	PTF-SAE Short

External pipe threads shall be chamfered 45° to the minor diameter.

Related specifications covering blank sizes, dies or chasers, gages, etc., are shown in the SAE Standard for Dryseal Pipe Threads.

Material and Manufacture: Pipe Plugs, Filler and Drain Plugs may be made from cast iron, malleable iron, steel, brass, bronze or aluminum alloy as indicated unless otherwise specified by Engineering, by casting, forging, or milling from the bar or upsetting from a grade of material free from defects which will affect their serviceability.

Dimensions and Tolerances: Dimensions apply to the finished parts, plated, hardened or otherwise processed as specified by Engineering. Tolerances on dimensions not otherwise limited shall be plus or minus 0.010 inch. Taper on head of Square Head Plugs may be minus 4° total. Taper on Square and Hexagon countersunk wrench opening may be plus 4° total. Slight radius at sides of wrench openings permitted if holes are broached.

Defects: Parts shall be free from burrs, loose scale, sharp edges, eccentricity of diameters and all other defects which affect their serviceability.

Limits: Allowable variation on dimensions controlling finished surfaces is ± .010 unless otherwise specified.

PIPE PLUGS

These specifications apply to Automotive Pipe Plugs and in respect to pipe threads, to parts with which plugs assemble.

Pipe Threads: The pipe threads, unless there is specific authorization to the contrary, shall conform with the Dryseal American (National Standard Taper Pipe Thread (NPTF). Specifications for Dryseal Pipe Threads are given in detail in the SAE Standards for Dryseal Pipe Threads.

Length "K" may be reduced by one p (thread) if thread is cut through at head corners.

Pipe plug dimensions in this standard are based on the length of the Dryseal American (National) Standared Taper Pipe Thread (NPTF), it being the consensus of manufacturers and users that trouble-free assembly and pressure-tight joints without lubricant or sealer cannot be assured unless a full length thread is used.

Shorter thread and body lengths are available in the pipe threaded Automotive Filler and Drain Plugs which have threads shortened in conformity with the Dryseal SAE Short Taper Pipe Thread (PTF-SAE Short).

FILLER & DRAIN PLUGS

These specifications apply to Automotive Filler and Drain Plugs with taper pipe threads and in respect to Pipe Threads, to parts with which plugs assemble.

Pipe Threads: The pipe threads on filler and drain plugs, unless there is specific authorization to the contrary, shall conform with the Dryseal SAE Short Taper Pipe Thread (PTF-SAE Short). Specifications for Dryseal pipe threads are given in detail in the SAE Standards for Dryseal Pipe Threads.

Filler and Drain Plug dimensions in this standard are based on the length of the Dryseal SAE Short Taper Pipe Thread (PTF-SAE Short). Limitations on the use of this thread are explained in the Standard for Dryseal Pipe Threads.

Longer thread and body lengths are available in the automotive pipe plugs which have threads in conformity with the Dryseal American (National) Standard Taper Pipe Thread (NPTF).

NOTE: When finish is required refer to Addendum.

FLARED AND INVERTED FLARED TUBE FITTINGS

These specifications apply to Flared and Inverted Flared Tube Fittings and in respect to pipe threads, to parts with which fittings assemble.

Pipe Threads: The pipe threads, unless there is specific authorization to the contrary, shall conform with the Dryseal American (National) Standard Taper Pipe Thread NPTF. At Engineerings option, and with their specific authorization and under separate part number the pipe thread on fittings may be shortened in conformity with the SAE Short Dryseal Taper Pipe Thread PTF SAE Short. Specifications for Dryseal Pipe Threads are given in detail in the SAE Standards for Dryseal Pipe Threads.

Tube fitting dimensions on the preceding pages are based on the length of the Dryseal American (National) Standard Taper Pipe Thread NPTF, it being the consensus of manufacturer and user opinion that trouble-free assembly and pressure-tight joints without lubricant or sealer cannot be assured unless a full length thread is used.

Internal pipe threads shall be chamfered 45 degrees to the major diameter.
External pipe threads shall be chamfered 45 degrees to the minor diameter.

Related specifications covering blank sizes, blind hole depths, pipe taps, chasers, tap drills, gages, etc., are shown in the SAE Standard for Dryseal Pipe Threads.

Internal Taper Pipe Threads: The tap drill depths and the overall lengths specified in the preceding tables for automotive tube fittings with internal taper pipe threads are not consistent with the tap drill depths and the overall thread lengths of the Dryseal American (National) Standard Taper Pipe Threads NPTF as specified in Dryseal Pipe Thread Standards. The full length Dryseal American (National) Standard Taper Pipe Taps as specified in SAE Dryseal Pipe Thread Standards cannot be used as the tap drill depths and overall lengths of the fittings have been reduced to the minimum required by bottoming taps to produce standard full thread length. The deviations above described are peculiar to automotive tube fittings. As special tooling is required, caution should be exercised in specifying the deviations for any other products.

Straight Threads: Unified Form Class 2A external and Class 2B internal threads shall be used for all types of fittings. The pitch diameter tolerance shall be the same as the corresponding diameter-pitch combination and class of the Unified Coarse and Fine Thread Series. Special diameter-pitch combinations shall be based on diameter, pitch and length of engagement of 9 x pitch. External thread major diameter tolerance shall be $0.09\sqrt[3]{P^2}$. Internal thread minor diameter tolerance shall be one-eighth the height of Sharp V Thread.

Internal threads shall be chamfered 45 degrees to the major diameter.
External threads shall be chamfered 45 degrees to the minor diameter.

External thread accentricity tolerance.

1. When Screw P.D. is maximum and screw major diameter is maximum, these two thread elements must be concentric. However, if the Screw major diameter is out of round, undersize, these two thread elements may be eccentric at the point of out of roundness an indicator reading amount equal to the Screw major diameter tolerance.
2. When Screw P.D. is minimum and Screw major diameter is maximum, these two thread elements may be eccentric an indicator reading amount equal to the Screw P. D. Tolerance.
3. When Screw P.D. is maximum and Screw major diameter is minimum, these two thread elements may be eccentric an indicator reading amount equal to the Screw major diameter tolerance.
4. When Screw P.D. is minimum and Screw major diameter is minimum, these two thread elements may be eccentric an indicator reading amount equal the sum of the screw P.D. tolerance and the screw major diameter tolerance.

Internal thread eccentricity tolerance.

1. When nut P.D. is minimum and nut minor diameter is minimum, these two thread elements must be concentric. However, if the nut minor diameter is out of round, oversize, the two thread elements may be eccentric at the point of out of roundness an indicator reading amount equal to the nut minor diameter tolerance.
2. When nut P.D. is maximum and nut minor diameter is minimum, these two thread elements may be eccentric an indicator reading amount equal to the nut P.D. tolerance.
3. When nut P.D. is minimum and nut minor diameter is maximum, these two thread elements may be eccentric an indicator reading amount equal to the nut minor diameter tolerance.
4. When nut P.D. is maximum and nut minor diameter is maximum, these two thread elements may be eccentric an indicator reading amount equal to the sum of the nut P.D. tolerance and the nut minor diameter tolerance.

Material: Fittings shall be brass unless otherwise specified by Engineering; and at manufacturer's option, and in accordance with his process of manufacturer, may be milled from the bar, cast or forged.

Contour: Details of contour are optional with manufacturer, wrench flats are optional.

Dimensions and Tolerances: Dimensions apply to the finished parts, plated, hardened or otherwise processed as specified by Engineering. Tolerance on all dimensions not otherwise limited shall be plus or minus 0.010 inch. Fitting seats must be concentric with straight thread pitch diameters within 0.010 inch full indicator reading. Minimum and maximum across flat dimensions shall be commercial tolerances of bar or extruded material from which the parts are made. Fittings are intended for use with tubing having an outside diameter tolerance of plus or minus .002.

Defects: Fittings shall be free from burrs, loose scale, sharp edges, eccentricity of diameters and all other defects that might affect their serviceability.

STANDARD SINGLE AND DOUBLE FLARE FOR STEEL, COPPER AND BRASS TUBING

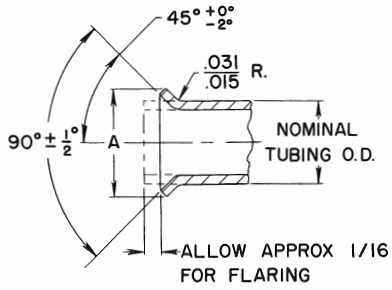

SINGLE FLARE

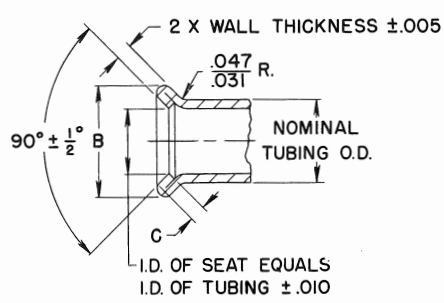

DOUBLE FLARE

Nominal Tubing O.D.	A		B		C
	Single Flare Diameter		Double Flare Diameter		Seat Length
	Max.	Min.	Max.	Min.	Min.
1/8	.181	.171	.213	.203	.040
3/16	.249	.239	.280	.270	.040
1/4	.325	.315	.360	.350	.040
5/16	.404	.388	.425	.415	.062
3/8	.487	.471	.500	.490	.062
7/16	.561	.545	.570	.560	.062
1/2	.623	.607	.640	.630	.062
9/16	.676	.660	.712	.698	.062
5/8	.748	.732	.772	.758	.062
3/4	.916	.900	.912	.898	.062
7/8	1.041	1.025	-	-	-
1	1.157	1.141	-	-	-

FORD MOTOR COMPANY
STANDARD PARTS

LUBRICATION FITTINGS — STRAIGHT

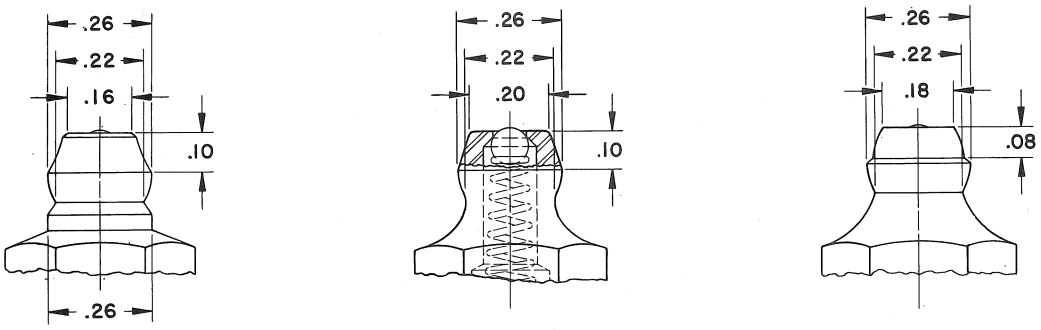

OPTIONAL TIPS FOR LUBRICATION FITTINGS

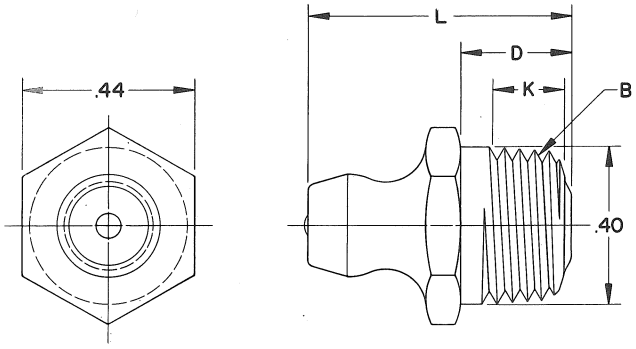

EXTERNAL TAPER PIPE THREAD

B SAE Dryseal Pipe Thread	K Min Effective Thread Length	D Shank Length	L Length	Ford Part Numbers
1/8-27 PTF Spl Extra Short	.18	.31- .25	.70- .62	87901-S
1/8-27 PTF Spl Short	.22	.79- .73	1.30-1.22	87902-S
1/8-27 PTF Spl Short	.22	1.31-1.25	1.80-1.72	87903-S
1/8-27 PTF Spl Short	.22	2.21-2.15	2.66-2.58	87904-S

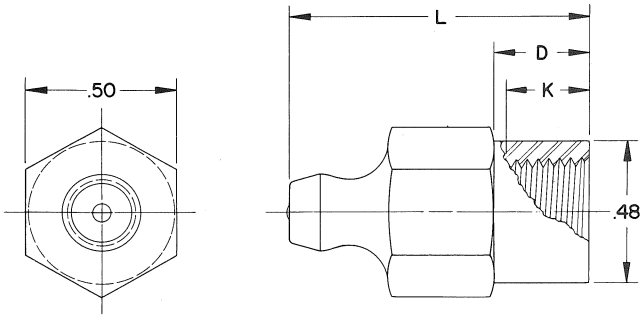

1/8-27 DRYSEAL-NPTF INTERNAL THREAD

K	Min Effective Thread Length	.28
D	Shank Length	.35-.29
L	Length	1.04-.96
	Ford Part Number	87906-S

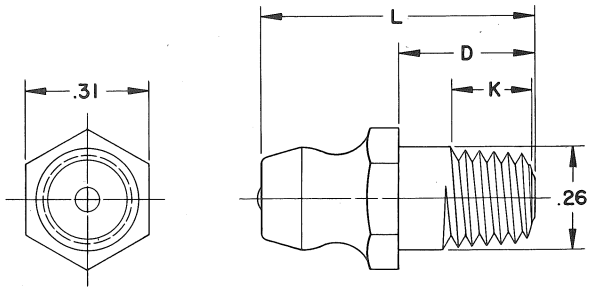

1/4-28 TAPER THREAD (SAE-LT)

K Min Effective Thread Length	D Shank Length	L Length	Ford Part Numbers
.10	.21-.15	.58-.50	87907-S
.20	.37-.31	.72-.64	87908-S
.20	.65-.59	.98-.90	87909-S

NOTES: Recommended finish: S8; for lubrication fittings, S8 requirements are increased to .0002 minimum zinc thickness with 48 hours salt spray resistance to red rust corrosion.
MATERIAL: Body - SAE 1112 (M-2K2-B) Steel.
For General Specifications see page L-950.01.

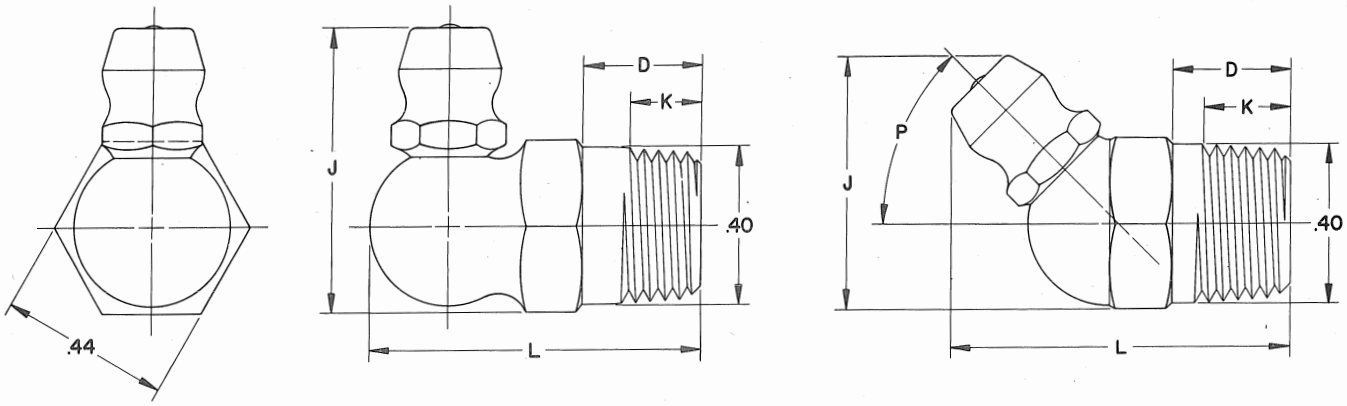

1/8-27 DRYSEAL PTF SPECIAL SHORT EXTERNAL THREAD

P Angle	K Min Effective Thread Length	D Shank Length	J Overall Height	L Overall Length	Ford Part Numbers
30°	.22	.33- .27	.60-.52	.94- .86	87911-S
30°	.22	1.29-1.23	.60-.52	2.14-2.06	87912-S
45°	.22	.33- .27	.68-.60	.90- .82	87913-S
65°	.22	.33- .27	.76-.68	.90- .82	87914-S
65°	.22	.59- .53	.76-.68	1.22-1.14	87915-S
90°	.22	.33- .27	.76-.68	.88- .80	87916-S
90°	.22	1.29-1.23	.76-.68	1.86-1.78	87919-S
105°	.22	.33- .27	.80-.72	1.10-1.02	87920-S

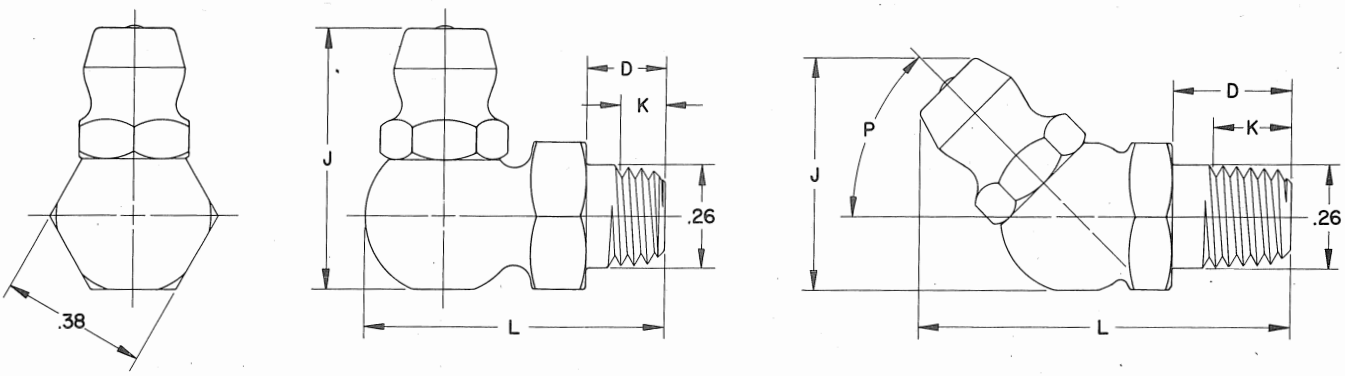

1/4-28 TAPER THREAD (SAE-LT)

P Angle	K Min Effective Thread Length	D Shank Length	J Overall Height	L Overall Length	Ford Part Numbers
45°	.10	.23-.17	.62-.54	.86-.78	87921-S
45°	.20	.33-.27	.62-.54	.98-.90	87922-S
90°	.10	.23-.17	.70-.62	.80-.72	87924-S

NOTES: Recommended finish: S8; for lubrication fittings, S8 requirements are increased to .0002 minimum zinc thickness with 48 hours salt spray resistance to red rust corrosion.
MATERIAL: Body and Tip - SAE 1112 (M-2K2-B) Steel.
For General Specifications see page L-950.01.

LUBRICATION FITTINGS

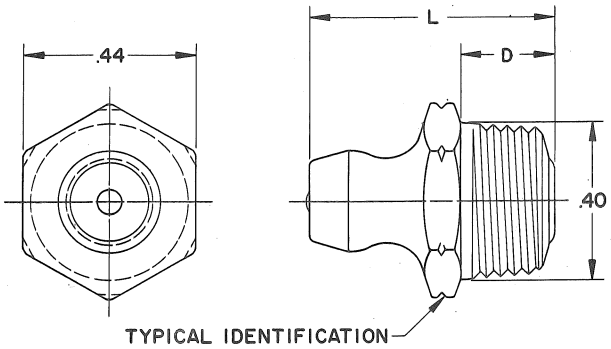

1/8 SPECIAL TAPER DRIVE THREAD

D Shank Length	L Overall Length	Ford Part Numbers
.27-.21	.66-.58	87957-S

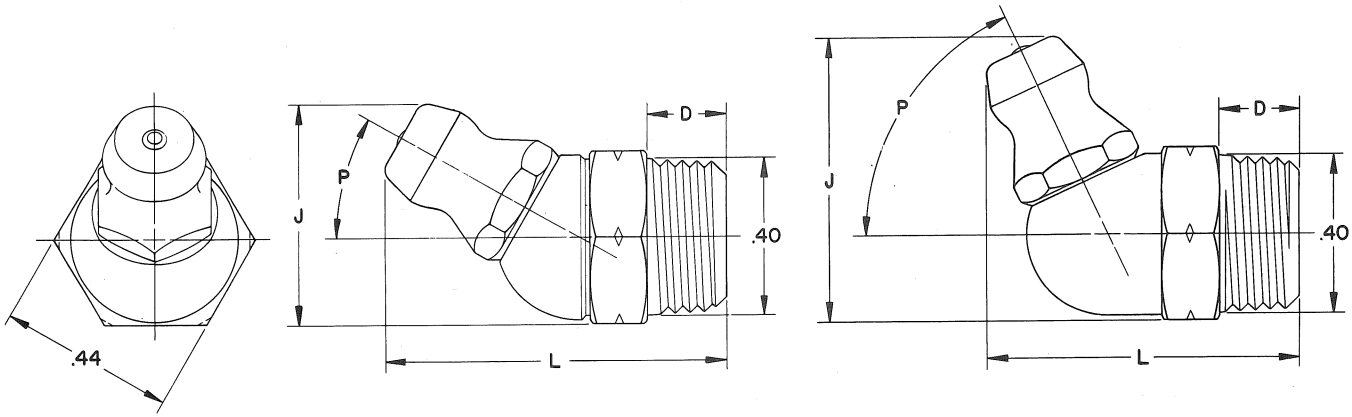

1/8 SPECIAL TAPER DRIVE THREAD

P Angle	D Shank Length	J Overall Height	L Overall Length	Ford Part Numbers
30°	.23-.17	.60-.52	.90-.82	87958-S
65°	.23-.17	.76-.68	.82-.74	87959-S
90°	.23-.17	.76-.68	.80-.72	87960-S

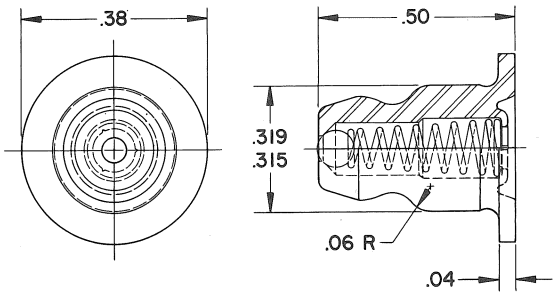

PLUG BASE

Ford Part Numbers	87931-S

NOTES: Recommended finish: S8; for lubrication fittings, S8 requirements are increased to .0002 minimum zinc thickness with 48 hours salt spray resistance to red rust corrosion.
MATERIAL: Body and Tip - SAE 1112 (M-2K2-B) Steel.
For General Specifications see page L-950.01.

FORD MOTOR COMPANY
STANDARD PARTS

LUBRICATION FITTINGS

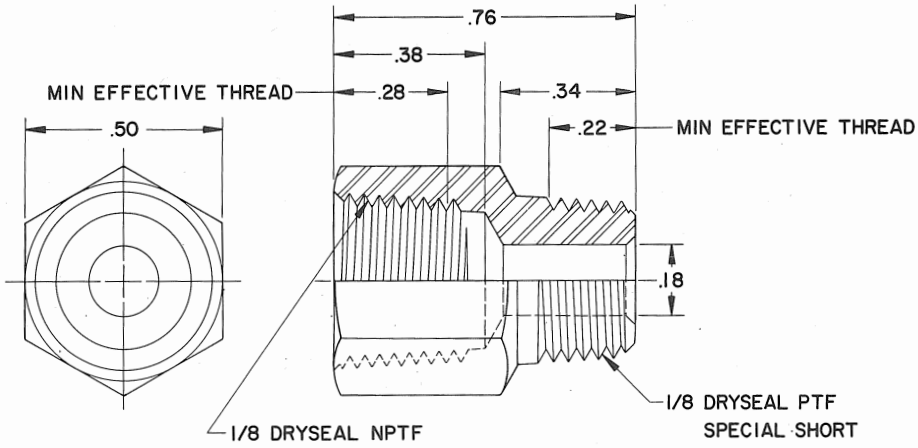

EXTENSION

Ford Part Numbers	87937-S

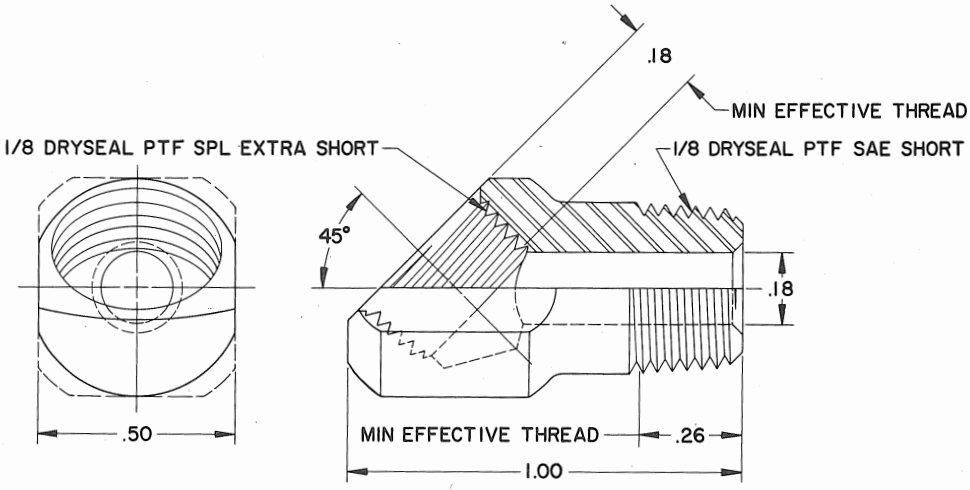

ELBOW ADAPTER

Ford Part Numbers	87936-S

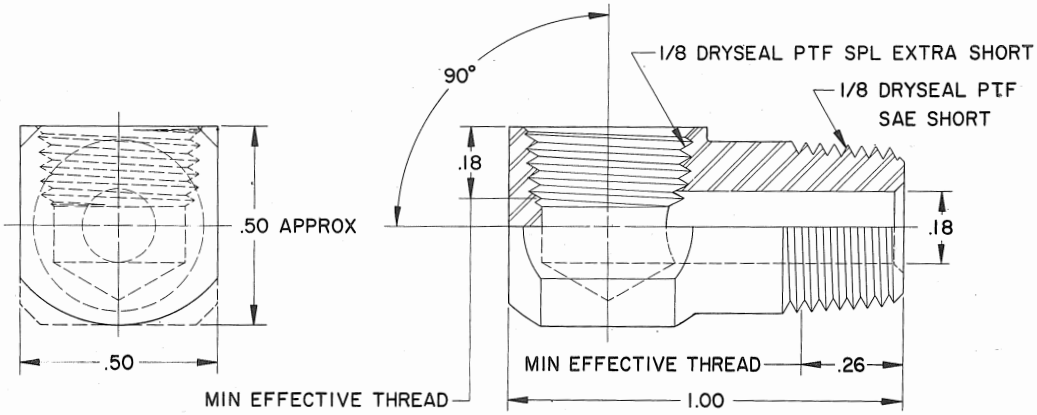

ELBOW ADAPTER

Ford Part Numbers	87935-S

NOTES: Recommended finish: S8; for lubrication fittings, S8 requirements are increased to .0002 minimum zinc thickness with 48 hours salt spray resistance to red rust corrosion.
MATERIAL: Body - SAE 1112 (M-2K2-B) Steel.
For General Specifications see page L-950.01.

FORD MOTOR COMPANY
STANDARD PARTS

"O" RING SEALS — .070 & .103 SECTION WIDTHS

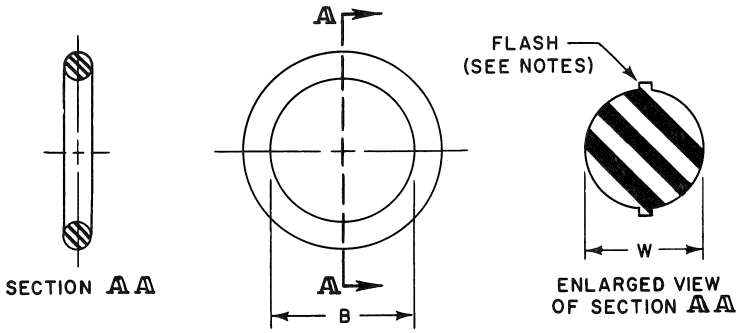

NOM. INSIDE DIA.	B ACTUAL INSIDE DIAMETER		W .067-.073 SECTION WIDTH			
			MATERIAL M-2D40-A	MATERIAL M-2D40-B	MATERIAL M-2D40-C	MATERIAL M-6342-A
	MIN.	MAX.	FORD PART NUMBERS	FORD PART NUMBERS	FORD PART NUMBERS	FORD PART NUMBERS
.125	.109	.119	87000-S91	87000-S92	87000-S93	87000-S94
.156	.140	.150	87001-S91	87001-S92	87001-S93	87001-S94
.187	.171	.181	87002-S91	87002-S92	87002-S93	87002-S94
.219	.203	.213	87003-S91	87003-S92	87003-S93	87003-S94
.250	.234	.244	87004-S91	87004-S92	87004-S93	87004-S94
.281	.287	.297	87005-S91	87005-S92	87005-S93	87005-S94
.312	.296	.306	87006-S91	87006-S92	87006-S93	87006-S94
.344	.328	.338	87007-S91	87007-S92	87007-S93	87007-S94
.375	.359	.369	87008-S91	87008-S92	87008-S93	87008-S94
.406	.390	.400	87009-S91	87009-S92	87009-S93	87009-S94
.437	.421	.431	87010-S91	87010-S92	87010-S93	87010-S94
.469	.453	.463	87011-S91	87011-S92	87011-S93	87011-S94
.500	.484	.494	87012-S91	87012-S92	87012-S93	87012-S94
.531	.515	.525	87013-S91	87013-S92	87013-S93	87013-S94
.562	.546	.556	87014-S91	87014-S92	87014-S93	87014-S94
.594	.578	.588	87015-S91	87015-S92	87015-S93	87015-S94
.625	.609	.619	87016-S91	87016-S92	87016-S93	87016-S94
.656	.640	.650	87017-S91	87017-S92	87017-S93	87017-S94
.687	.671	.681	87018-S91	87018-S92	87018-S93	87018-S94
.719	.703	.713	87019-S91	87019-S92	87019-S93	87019-S94
.750	.734	.744	87020-S91	87020-S92	87020-S93	87020-S94
.812	.795	.807	87021-S91	87021-S92	87021-S93	87021-S94
.875	.858	.870	87022-S91	87022-S92	87022-S93	87022-S94
.937	.920	.932	87023-S91	87023-S92	87023-S93	87023-S94
1.000	.983	.995	87024-S91	87024-S92	87024-S93	87024-S94
1.062	1.045	1.057	87025-S91	87025-S92	87025-S93	87025-S94
1.125	1.108	1.120	87026-S91	87026-S92	87026-S93	87026-S94
1.187	1.170	1.182	87027-S91	87027-S92	87027-S93	87027-S94
1.250	1.233	1.245	87028-S91	87028-S92	87028-S93	87028-S94
1.312	1.295	1.307	87029-S91	87029-S92	87029-S93	87029-S94
1.375	1.358	1.370	87030-S91	87030-S92	87030-S93	87030-S94
1.437	1.420	1.432	87128-S91	87128-S92	87128-S93	87128-S94
1.500	1.483	1.495	87129-S91	87129-S92	87129-S93	87129-S94
1.562	1.545	1.557	87154-S91	87154-S92	87154-S93	87154-S94
1.625	1.608	1.620	87155-S91	87155-S92	87155-S93	87155-S94
1.687	1.670	1.682	87156-S91	87156-S92	87156-S93	87156-S94
1.750	1.743	1.755	87157-S91	87157-S92	87157-S93	87157-S94
1.812	1.795	1.807	87158-S91	87158-S92	87158-S93	87158-S94
1.875	1.858	1.870	87159-S91	87159-S92	87159-S93	87159-S94
1.937	1.920	1.932	87160-S91	87160-S92	87160-S93	87160-S94
2.000	1.983	1.995	87161-S91	87161-S92	87161-S93	87161-S94

NOM. INSIDE DIA.	B ACTUAL INSIDE DIAMETER		W .100-.106 SECTION WIDTH			
			MATERIAL M-2D40-A	MATERIAL M-2D40-B	MATERIAL M-2D40-C	MATERIAL M-6342-A
	MIN.	MAX.	FORD PART NUMBERS	FORD PART NUMBERS	FORD PART NUMBERS	FORD PART NUMBERS
.375	.357	.367	87031-S91	87031-S92	87031-S93	87031-S94
.437	.419	.429	87032-S91	87032-S92	87032-S93	87032-S94
.500	.482	.492	87033-S91	87033-S92	87033-S93	87033-S94
.562	.544	.554	87034-S91	87034-S92	87034-S93	87034-S94
.625	.607	.617	87035-S91	87035-S92	87035-S93	87035-S94
.687	.669	.679	87036-S91	87036-S92	87036-S93	87036-S94
.750	.732	.742	87037-S91	87037-S92	87037-S93	87037-S94
.812	.793	.805	87038-S91	87038-S92	87038-S93	87038-S94
.875	.856	.868	87039-S91	87039-S92	87039-S93	87039-S94
.937	.918	.930	87040-S91	87040-S92	87040-S93	87040-S94
1.000	.981	.993	87041-S91	87041-S92	87041-S93	87041-S94
1.062	1.043	1.055	87042-S91	87042-S92	87042-S93	87042-S94
1.125	1.106	1.118	87043-S91	87043-S92	87043-S93	87043-S94
1.187	1.168	1.180	87044-S91	87044-S92	87044-S93	87044-S94
1.250	1.231	1.243	87045-S91	87045-S92	87045-S93	87045-S94
1.312	1.293	1.305	87046-S91	87046-S92	87046-S93	87046-S94
1.375	1.356	1.368	87047-S91	87047-S92	87047-S93	87047-S94
1.437	1.418	1.430	87048-S91	87048-S92	87048-S93	87048-S94
1.500	1.481	1.493	87127-S91	87127-S92	87127-S93	87127-S94
1.562	1.539	1.559	87130-S91	87130-S92	87130-S93	87130-S94
1.625	1.602	1.622	87131-S91	87131-S92	87131-S93	87131-S94
1.687	1.664	1.684	87132-S91	87132-S92	87132-S93	87132-S94
1.750	1.727	1.747	87133-S91	87133-S92	87133-S93	87133-S94
1.812	1.789	1.809	87134-S91	87134-S92	87134-S93	87134-S94
1.875	1.852	1.872	87135-S91	87135-S92	87135-S93	87135-S94
1.938	1.915	1.935	87136-S91	87136-S92	87136-S93	87136-S94
2.000	1.977	1.997	87137-S91	87137-S92	87137-S93	87137-S94
2.063	2.040	2.060	87138-S91	87138-S92	87138-S93	87138-S94
2.125	2.102	2.122	87139-S91	87139-S92	87139-S93	87139-S94
2.187	2.165	2.185	87140-S91	87140-S92	87140-S93	87140-S94
2.250	2.227	2.247	87141-S91	87141-S92	87141-S93	87141-S94
2.313	2.290	2.310	87142-S91	87142-S92	87142-S93	87142-S94
2.375	2.352	2.372	87143-S91	87143-S92	87143-S93	87143-S94
2.438	2.415	2.435	87144-S91	87144-S92	87144-S93	87144-S94
2.500	2.477	2.497	87145-S91	87145-S92	87145-S93	87145-S94
2.563	2.540	2.560	87146-S91	87146-S92	87146-S93	87146-S94
2.625	2.602	2.622	87147-S91	87147-S92	87147-S93	87147-S94
2.688	2.665	2.685	87148-S91	87148-S92	87148-S93	87148-S94
2.750	2.727	2.747	87149-S91	87149-S92	87149-S93	87149-S94
2.813	2.790	2.810	87150-S91	87150-S92	87150-S93	87150-S94
2.875	2.852	2.872	87151-S91	87151-S92	87151-S93	87151-S94
2.938	2.915	2.935	87152-S91	87152-S92	87152-S93	87152-S94
3.000	2.977	2.997	87153-S91	87153-S92	87153-S93	87153-S94

NOTES: For General Specifications see Page L-950.11

M-2D40-A: Oil resistant, identified by one yellow stripe; flash limits .003 high by .005 wide.
M-2D40-B: Gasoline resistant, identified by one red stripe; flash limits .003 high by .005 wide.
M-2D40-C: Non-mineral oil resistant, identified by one green stripe; flash limits .003 high by .005 wide.
M-6342-A: Hot automatic transmission fluid resistant, identified by one blue stripe; flash limits .008 high by .006 wide.

FORD MOTOR COMPANY
STANDARD PARTS

"O" RING SEALS — .139 & .210 SECTION WIDTHS

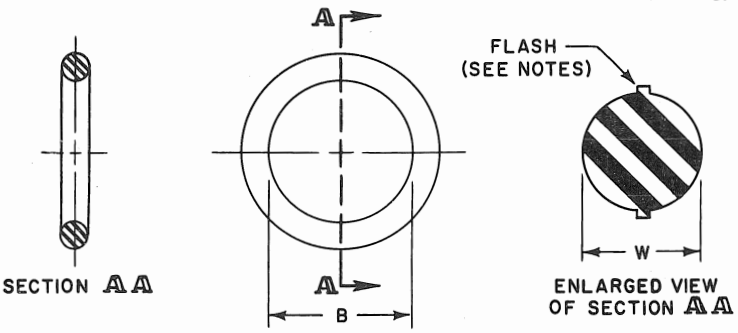

NOM. INSIDE DIA.	B ACTUAL INSIDE DIAMETER		W .135-.143 SECTION WIDTH			
			MATERIAL M-2D40-A	MATERIAL M-2D40-B	MATERIAL M-2D40-C	MATERIAL M-6342-A
	MIN.	MAX.	FORD PART NUMBERS	FORD PART NUMBERS	FORD PART NUMBERS	FORD PART NUMBERS
.750	.728	.740	87049-S91	87049-S92	87049-S93	87049-S94
.812	.790	.802	87050-S91	87050-S92	87050-S93	87050-S94
.875	.853	.865	87051-S91	87051-S92	87051-S93	87051-S94
.937	.915	.927	87052-S91	87052-S92	87052-S93	87052-S94
1.000	.978	.990	87053-S91	87053-S92	87053-S93	87053-S94
1.062	1.040	1.052	87054-S91	87054-S92	87054-S93	87054-S94
1.125	1.103	1.115	87055-S91	87055-S92	87055-S93	87055-S94
1.187	1.165	1.177	87056-S91	87056-S92	87056-S93	87056-S94
1.250	1.228	1.240	87057-S91	87057-S92	87057-S93	87057-S94
1.312	1.290	1.302	87058-S91	87058-S92	87058-S93	87058-S94
1.375	1.353	1.365	87059-S91	87059-S92	87059-S93	87059-S94
1.437	1.415	1.427	87060-S91	87060-S92	87060-S93	87060-S94
1.500	1.478	1.490	87061-S91	87061-S92	87061-S93	87061-S94
1.562	1.536	1.556	87062-S91	87062-S92	87062-S93	87062-S94
1.625	1.599	1.619	87063-S91	87063-S92	87063-S93	87063-S94
1.687	1.661	1.681	87064-S91	87064-S92	87064-S93	87064-S94
1.750	1.724	1.744	87065-S91	87065-S92	87065-S93	87065-S94
1.812	1.786	1.806	87066-S91	87066-S92	87066-S93	87066-S94
1.875	1.849	1.869	87067-S91	87067-S92	87067-S93	87067-S94
1.937	1.911	1.931	87068-S91	87068-S92	87068-S93	87068-S94
2.000	1.974	1.994	87069-S91	87069-S92	87069-S93	87069-S94
2.125	2.099	2.119	87070-S91	87070-S92	87070-S93	87070-S94
2.250	2.224	2.244	87071-S91	87071-S92	87071-S93	87071-S94
2.375	2.349	2.369	87072-S91	87072-S92	87072-S93	87072-S94
2.500	2.474	2.494	87073-S91	87073-S92	87073-S93	87073-S94
2.625	2.599	2.619	87074-S91	87074-S92	87074-S93	87074-S94
2.750	2.719	2.749	87075-S91	87075-S92	87075-S93	87075-S94
2.875	2.844	2.874	87076-S91	87076-S92	87076-S93	87076-S94
3.000	2.969	2.999	87077-S91	87077-S92	87077-S93	87077-S94
3.125	3.094	3.124	87078-S91	87078-S92	87078-S93	87078-S94
3.250	3.219	3.249	87079-S91	87079-S92	87079-S93	87079-S94
3.375	3.344	3.374	87080-S91	87080-S92	87080-S93	87080-S94
3.500	3.469	3.499	87081-S91	87081-S92	87081-S93	87081-S94
3.625	3.594	3.624	87082-S91	87082-S92	87082-S93	87082-S94
3.750	3.719	3.749	87083-S91	87083-S92	87083-S93	87083-S94
3.875	3.844	3.874	87084-S91	87084-S92	87084-S93	87084-S94
4.000	3.969	3.999	87085-S91	87085-S92	87085-S93	87085-S94
4.125	4.094	4.124	87086-S91	87086-S92	87086-S93	87086-S94
4.250	4.219	4.249	87087-S91	87087-S92	87087-S93	87087-S94
4.375	4.344	4.374	87088-S91	87088-S92	87088-S93	87088-S94
4.500	4.469	4.499	87089-S91	87089-S92	87089-S93	87089-S94
4.625	4.594	4.624	87090-S91	87090-S92	87090-S93	87090-S94
4.750	4.719	4.749	87091-S91	87091-S92	87091-S93	87091-S94
4.875	4.844	4.874	87092-S91	87092-S92	87092-S93	87092-S94
5.000	4.969	4.999	87093-S91	87093-S92	87093-S93	87093-S94
5.125	5.086	5.132	87094-S91	87094-S92	87094-S93	87094-S94
5.250	5.211	5.257	87095-S91	87095-S92	87095-S93	87095-S94
5.375	5.336	5.382	87096-S91	87096-S92	87096-S93	87096-S94
5.500	5.461	5.507	87097-S91	87097-S92	87097-S93	87097-S94
5.625	5.586	5.632	87098-S91	87098-S92	87098-S93	87098-S94
5.750	5.711	5.757	87099-S91	87099-S92	87099-S93	87099-S94
5.875	5.836	5.882	87100-S91	87100-S92	87100-S93	87100-S94
6.000	5.961	6.007	87101-S91	87101-S92	87101-S93	87101-S94

NOM. INSIDE DIA.	B ACTUAL INSIDE DIAMETER		W .205-.215 SECTION WIDTH			
			MATERIAL M-2D40-A	MATERIAL M-2D40-B	MATERIAL M-2D40-C	MATERIAL M-6342-A
	MIN.	MAX.	FORD PART NUMBERS	FORD PART NUMBERS	FORD PART NUMBERS	FORD PART NUMBERS
1.500	1.465	1.485	87102-S91	87102-S92	87102-S93	87102-S94
1.625	1.590	1.610	87103-S91	87103-S92	87103-S93	87103-S94
1.750	1.715	1.735	87104-S91	87104-S92	87104-S93	87104-S94
1.875	1.840	1.860	87105-S91	87105-S92	87105-S93	87105-S94
2.000	1.965	1.985	87106-S91	87106-S92	87106-S93	87106-S94
2.125	2.090	2.110	87107-S91	87107-S92	87107-S93	87107-S94
2.250	2.215	2.235	87108-S91	87108-S92	87108-S93	87108-S94
2.375	2.340	2.360	87109-S91	87109-S92	87109-S93	87109-S94
2.500	2.465	2.485	87110-S91	87110-S92	87110-S93	87110-S94
2.625	2.590	2.610	87111-S91	87111-S92	87111-S93	87111-S94
2.750	2.710	2.740	87112-S91	87112-S92	87112-S93	87112-S94
2.875	2.835	2.865	87113-S91	87113-S92	87113-S93	87113-S94
3.000	2.960	2.990	87114-S91	87114-S92	87114-S93	87114-S94
3.125	3.085	3.115	87115-S91	87115-S92	87115-S93	87115-S94
3.250	3.210	3.240	87116-S91	87116-S92	87116-S93	87116-S94
3.375	3.335	3.365	87117-S91	87117-S92	87117-S93	87117-S94
3.500	3.460	3.490	87118-S91	87118-S92	87118-S93	87118-S94
3.625	3.585	3.615	87119-S91	87119-S92	87119-S93	87119-S94
3.750	3.710	3.740	87120-S91	87120-S92	87120-S93	87120-S94
3.875	3.835	3.865	87121-S91	87121-S92	87121-S93	87121-S94
4.000	3.960	3.990	87122-S91	87122-S92	87122-S93	87122-S94
4.125	4.085	4.115	87123-S91	87123-S92	87123-S93	87123-S94
4.250	4.210	4.240	87124-S91	87124-S92	87124-S93	87124-S94
4.375	4.335	4.365	87125-S91	87125-S92	87125-S93	87125-S94
4.500	4.460	4.490	87126-S91	87126-S92	87126-S93	87126-S94

NOTES: For General Specifications see Page L-950.11

M-2D40-A: Oil resistant, identified by one yellow stripe; flash limits .003 high by .005 wide.
M-2D40-B: Gasoline resistant, identified by one red stripe; flash limits .003 high by .005 wide.
M-2D40-C: Non-mineral oil resistant, identified by one green stripe; flash limits .003 high by .005 wide.
M-6342-A: Hot automatic transmission fluid resistant, identified by one blue stripe; flash limits .008 high by .006 wide.

GENERAL SPECIFICATIONS

LUBRICATION FITTINGS

GENERAL: Tolerances and dimensions not otherwise specified in the dimensional tables shall be plus or minus .010 inch. Limits on across flat dimension shall be commercial tolerances of bar or extruded material. Minimum across corner dimensions of hexagons shall be 1.092 times the nominal width across flats, but shall not result in a side flat width less than .45 times the nominal width across flats. Angle tolerance shall be plus or minus 3° on elbow fittings. Tips of fittings must be case hardened to a depth of .009-.005 inch with a minimum Rockwell hardness of 15N-83. Details of contour not controlled by specific dimensions are optional providing function is not affected.

CHECK VALVE: All lubrication fittings will have ball check valves located in the tip.

TAPER PIPE THREADS: Pipe threads shall conform in detail with SAE Dryseal Pipe Threads for the designated thread series, except that external thread crests may have greater maximum truncation. Experience has shown that the crest of the threads on lubrication fittings (intended for use with grease) does not have to conform to dryseal American Standard Form to function satisfactorily. Minimum effective thread length may include threads with incomplete crests, providing the root is complete. The deviations from standard Dryseal practice are peculiar to lubrication fittings, as special considerations are involved.

External pipe threads shall be chamfered to the closest 1/64 inch diameter smaller than the minor diameter within a tolerance of minus 1/64 inch on the diameter to produce approximately 1 incomplete thread and not to exceed 1 1/2 incomplete threads. Internal pipe threads shall be countersunk 90° inclusive to the closest 1/64 inch diameter larger than the major diameter within a tolerance of plus 1/64 inch on the diameter.

1/4-28 TAPER THREADS (SAE-LT): External taper threads shall be Unified and American Form 1/4-28 with a diametral taper of .75 plus or minus .06 inch per 12.00 inch of length. The pitch diameter limits measured at the start of the thread on the small end, shall be .2257-.2224 inch. These threads shall be assembled into holes tapped with 1/4-28 UNF-3B straight thread, having a modified maximum minor diameter of .2152 inch to insure 75% minimum thread height.

SPECIAL TAPER DRIVE FITTINGS: Fittings in this category are shown with a 1/8 Special Taper Drive Thread, and are slightly shorter than the 1/8-27 Dryseal thread types. The thread has a 27 thread per inch pitch, 90° thread form and 10° included angle taper. The root diameter at the small end is .340-.335 inch. The bodies of these fittings are hardened and they must bear an identification such as that shown on the illustrations. They may be threaded into a 1/8-27 internal pipe thread or into a plain hole, where the fitting will form its own

GENERAL SPECIFICATIONS

thread. The recommended hole size for self threading applications is .380-.373 inch.

DEFECTS: Parts must be free from burrs, loose scale, sharp edges and all other defects that might affect their serviceability.

ASSEMBLY WITH STRAIGHT INTERNAL PIPE THREADS: When straight internal pipe threads are intended for assembly with PTF Special Short and PTF Special Extra Short external taper pipe threaded lubrication fittings, they shall be tapped with Dryseal Fuel Internal Straight Pipe Taps (NPSF), which supersede the American Grease Fittings Taps. Such tapped holes should be held closer than standard tolerance, toward the maximum pitch diameter, to provide a minimum of one turn hand engagement with a maximum size fitting.

ASSEMBLY WITH TAPER PIPE THREADS: When Dryseal American Standard Internal Taper Pipe Threads (NPTF) are intended for assembly with external pipe threaded lubrication fittings, they should be held closer than standard tolerance toward the minimum pitch diameter by reducing the maximum engagement of both the L_1 and L_3 gages by one turn.

When Dryseal SAE Short Internal Taper Pipe Threads (PTF SAE Short) are intended for assembly with PTF Special Extra Short External pipe threaded lubrication fittings, they should be held closer than Standard tolerance toward the maximum pitch diameter by increasing the minimum engagement of both the L_1 and L_3 gages by one-half turn.

The specifications in this section were developed without considering whether patents may or may not be involved. In all cases, therefore, the supplier shall be required to assume patent liability.

GENERAL SPECIFICATIONS

PLUGS

External pipe threads shall be chamfered 45° to the minor diameter.

Related specifications covering blank sizes, dies or chasers, gages, etc., are shown in the SAE Standard for Dryseal Pipe Threads.

Material and Manufacture: Pipe Plugs, Filler and Drain Plugs may be made from cast iron, malleable iron, steel, brass, bronze or aluminum alloy as indicated unless otherwise specified by Engineering, by casting, forging, or milling from the bar or upsetting from a grade of material free from defects which will affect their serviceability.

Dimensions and Tolerances: Dimensions apply to the finished parts, plated, hardened or otherwise processed as specified by Engineering. Tolerances on dimensions not otherwise limited shall be plus or minus 0.010 inch. Taper on head of Square Head Plugs may be minus 4° total. Taper on Square and Hexagon countersunk wrench opening may be plus 4° total. Slight radius at sides of wrench openings permitted if holes are broached.

Defects: Parts shall be free from burrs, loose scale, sharp edges, eccentricity of diameters and all other defects which affect their serviceability.

Limits: Allowable variation on dimensions controlling finished surfaces is ± .010 unless otherwise specified.

PIPE PLUGS

These specifications apply to Automotive Pipe Plugs and in respect to pipe threads, to parts with which plugs assemble.

Pipe Threads: The pipe threads, unless there is specific authorization to the contrary, shall conform with the Dryseal American (National Standard Taper Pipe Thread (NPTF). Specifications for Dryseal Pipe Threads are given in detail in the SAE Standards for Dryseal Pipe Threads.

Length "K" may be reduced by one p (thread) if thread is cut through at head corners.

Pipe plug dimensions in this standard are based on the length of the Dryseal American (National) Standared Taper Pipe Thread (NPTF), it being the consensus of manufacturers and users that trouble-free assembly and pressure-tight joints without lubricant or sealer cannot be assured unless a full length thread is used.

Shorter thread and body lengths are available in the pipe threaded Automotive Filler and Drain Plugs which have threads shortened in conformity with the Dryseal SAE Sho t Taper Pipe Thread (PTF-SAE Short).

FILLER & DRAIN PLUGS

These specifications apply to Automotive Filler and Drain Plugs with taper pipe threads and in respect to Pipe Threads, to parts with which plugs assemble.

Pipe Threads: The pipe threads on filler and drain plugs, unless there is specific authorization to the contrary, shall conform with the Dryseal SAE Short Taper Pipe Thread (PTF-SAE Short). Specifications for Dryseal pipe threads are given in detail in the SAE Standards for Dryseal Pipe Threads.

Filler and Drain Plug dimensions in this standard are based on the length of the Dryseal SAE Short Taper Pipe Thread (PTF-SAE Short). Limitations on the use of this thread are explained in the Standard for Dryseal Pipe Threads.

Longer thread and body lengths are available in the automotive pipe plugs which have threads in conformity with the Dryseal American (National) Standard Taper Pipe Thread (NPTF).

NOTE: When finish is required refer to Addendum.

GENERAL SPECIFICATIONS

"O" Ring Seals

Identification:

The stripe shall be 1/16 in. wide (when possible) and shall cover approximately 45° of "O" ring section circumference. The material used for identification shall be nonflaking and nonpermenent.

Defects:

"O" rings shall be free from all defects that affect their serviceability.

The specifications in this section were developed without considering whether patents may or may not be involved. In all cases, therefore, the supplier shall be required to assume patent liability.

FORD MOTOR COMPANY
STANDARD PARTS

SECTION Z
ADDENDUM

SECTION Z - TABLE OF CONTENTS

UNIFIED AND AMERICAN SCREW THREADS (Cont'd)

Appendix E -- Formulas and Tables for Allowances and Tolerances of Standard Series Threads. . . Z-164.02

Increments in Pitch Diameter Tolerance - Tables 11 and 12. . . . . Z-164.05
Allowances and Tolerances for Standard Series Threads - Tables 13 thru 18. . . . Z-164.07

Appendix F -- Formulas for Limiting Dimensions of Special Series Threads Z-165.01

Outline Guide for Determining Limiting Dimensions of Special Series Threads. . . Z-165.03

Appendix G -- Formulas and Tables of Allowances and Tolerances of Special Series Threads . . . Z-166.02

Major Diameter Tolerances for External Threads of Special Diameters, Pitches, and Lengths of Engagement - Table 19. . . Z-166.03
Allowances for External Threads of Special Diameters and Pitches - Table 20. . . . . Z-166.03
Pitch Diameter Tolerances for Threads of Special Diameters, Pitches, and Lengths of Engagement - Tables 21 thru 28. . . . . Z-166.04
Minor Diameter Tolerances for Internal Special Screw Threads - Tables 29 thru 31 Z-166.20

Appendix H -- Internal Thread Minor Diameter Tolerances Z-167.02

Appendix I -- Recommended Hole Size Limits Before Threading For Different Lengths of Engagement - Tables 32 thru 33. . . . . Z-168.12

STANDARD PART FINISHES

In order to maintain a minimum number of Standard Part Finishes, the following "S" Finish Selection Aid has been compiled to facilitate the proper selection of "S" finish for Standard Part functions.

"S" FINISH SELECTION AID

A. STANDARD FINISHES

1. Corrosion Resistance
   a. "S8" Zinc Plate, is used where corrosion resistance is the primary consideration and color is not critical.

2. Bright Chrome Color
   a. "S13" or "S37" Chrome Plate-Bright, is used where a bright finish is required.

3. Unfinished
   a. "S" Plain, is used where corrosion is not a factor, as on parts operating in oil, on parts made from rustless steel or non-ferrous alloys, and on parts where further finishing will afford sufficient protection. It is also used for parts to be attached by welding and for cotter pins, rivets and clinch-on nuts.

B. SPECIAL FINISHES

1. Black (or dark) Color Required
   a. "S2" Raven Finish and Oil or Wax, is used where dark color and fair corrosion resistance is required, and a painted finish is not satisfactory due to chipping or loading-up of threads.

   b. "S3" Black Paint, is used where black color is mandatory and a painted finish can be used. Non-staining characteristics of this finish make it suitable for parts in contact with trim fabrics.

   c. "S15" Oxidized, is a smooth, uniform dull black finish, used where good appearance is of primary importance.

   d. "S32" Phosphate Coat and Black Paint, is used where black color and maximum corrosion resistance is required.

   e. "S38" Raven Finish is a phosphate coat, used where the part is to be painted in assembly.

2. Corrosion Resistance - Heavy Duty
   a. "S8B" Zinc Plate, is used where color is not critical and where a painted finish is not satisfactory, as on threaded parts, etc.

   b. "S32" Phosphate Coat and Paint, is used where a painted finish is required.

   c. "S26" Cadmium or Zinc Plate and Enamel (also used for parts handled by mouth).

3. Electrical Contact
   a. "S7" Cadmium Plate is used for parts in the electrical system to avoid interference with electrical conductivity at contact points. Parts with this finish can be soldered.

4. Soldering Characteristics
   a. "S10" Tinned is used for parts to be soldered.

5. Acid Resistance - Sulphuric
   a. "S16" Lead Plate is used for battery cable terminal clamps.

6. Wear Resistance
   a. "S18" Case Hardened is used for parts requiring a hard, wear-resistant surface.

7. Sterility for Handling by Mouth
   a. "S28" Sterile Coating is used for tacks and fasteners used for interior trim.

   b. "S26" Cadmium or Zinc Plate and Enamel is used for tacks and small nails used for convertible trim where good corrosion resistance is required.

C. FINISHES FOR SPECIFIC PARTS

1. Spring Temper Parts
   a. "S7" Cadmium Plate is used for spring temper parts, such as springs, lock washers, etc., where color is not a factor.

   b. "S32" Phosphate Coat and Paint is used for spring steel fasteners, clips, etc., where a black color is required or, in the case of hidden spring temper clips, an olive drab finish is satisfactory.

STANDARD PARTS FINISH SPECIFICATIONS

S PLAIN. No finish required or added.

S2 RAVEN FINISH & OIL OR WAX. This is a phosphate coating of even dark color covered with a suitable oil. Parts so finished shall withstand a 24 hour salt spray test as per ASTM B-117. Process Standard P-3A or C.

S3 BLACK FINISHES. This is a finish that will withstand a 16 hour salt spray test as per ASTM B-117. Black finishes applied as per Process Paint Standard C-3 permits various grades of black paint with or without a phosphate coating.

S5 COPPER PLATE. This finish is a flash electro-deposit used for identification purposes. A .0001 in. minimum electro-deposit is used for electrical contact. Process Standard P-8.

S6 NICKEL PLATE - BRIGHT. This finish is an electro-deposit of nickel on steel, white metal or brass. Steel and white metal parts plated under this Specification will have minimum coating thickness specified in P-40-B or F, as applicable, and must withstand a 24 hour salt spray test on significant surfaces, except on threaded areas, etc. as per ASTM B-117. Brass parts must conform to P-40-D except that nickel thickness may be .00005. No chromium is required for this finish.

S7 CADMIUM PLATE. This finish is an electro-deposit of Cadmium. Parts plated under this Specification will have a minimum coating thickness of .00015 in. and must withstand a 24 hour salt spray test on significant surfaces, except on threaded areas, etc. as per ASTM B-117. Process Standard P-41-C.

S8 ZINC PLATE. This finish is an electro-deposit of Zinc. Parts plated under this Specification will have a minimum coating thickness of .00015 in. and must withstand a 24 hour salt spray test on significant surfaces, except on threaded areas, etc. as per ASTM B-117. Process Standard P-41-C. When Zinc is specified Cadmium may be supplied.

S8B ZINC PLATE. This finish is an electro-deposit having a minimum coating thickness of .00035 in. Parts so plated shall withstand a 48 hour salt spray test on significant surfaces, except on threaded areas, etc. as per ASTM B-117. Process Standard P-41-B. When Zinc is specified Cadmium may be supplied.

S10 TINNED. Tin coating to be used on either copper or brass may be obtained by immersion or electro-deposition. Tin coating on steel parts shall be applied by electro-deposition with a .0001 in. nominal coat. Process Standard P-4-B. For emergency conditions, when tin is not available, an electro-galvanized coating of comparable quality may be substituted.

STANDARD PARTS FINISH SPECIFICATIONS

S PLAIN. No finish required or added.

S2 RAVEN FINISH AND OIL OR WAX. This is a phosphate coating of even dark color impregnated with oil or wax for corrosion resistance, Process reference P3 A or C. Any water displacing rust inhibited oil, soft wax or synthetic organic corrosion inhibitor may be used which is suitable for the purpose except sulphonated or chlorinated oils. Parts so treated must not be wet to the point of staining contacting surfaces, or greasy to the point of hampering handling; nor shall the coating be so hard or thick as to fill crevices and threads. In addition, the film must provide sufficient lubricity to facilitate assembly of threaded parts. Parts so treated shall withstand a 24 hour salt spray test as per ASTM B-117 (5% salt solution).

S3 BLACK FINISHES. This is a finish that will withstand a 16 hour salt spray test as per ASTM B-117. Black finishes applied as per Process Paint Standard C-3 permits various grades of black paint with or without a phosphate coating.

S5 COPPER PLATE. This finish is a flash electro-deposit used for identification purposes. A .0001 in. minimum electro-deposit is used for electrical contact. Process Standard P-8.

S6 NICKEL PLATE - BRIGHT. This finish is an electro-deposit of nickel on steel, white metal or brass. Steel and white metal parts plated under this Specification will have minimum coating thickness specified in P-40-B or F, as applicable, and must withstand a 24 hour salt spray test on significant surfaces, except on threaded areas, etc. as per ASTM B-117. Brass parts must conform to P-40-D except that nickel thickness may be .00005. No chromium is required for this finish.

S7 CADMIUM PLATE. This finish is an electro-deposit of Cadmium. Parts plated under this Specification will have a minimum coating thickness of .00015 in. and must withstand a 24 hour salt spray test on significant surfaces, except on threaded areas, etc. as per ASTM B-117. Process Standard P-41-C.

S8 ZINC PLATE. This finish is an electro-deposit of Zinc. Parts plated under this Specification will have a minimum coating thickness of .00015 in. and must withstand a 24 hour salt spray test on significant surfaces, except on threaded areas, etc. as per ASTM B-117. Process Standard P-41-C. When Zinc is specified Cadmium may be supplied.

S8B ZINC PLATE. This finish is an electro-deposit having a minimum coating thickness of .00035 in. Parts so plated shall withstand a 48 hour salt spray test on significant surfaces, except on threaded areas, etc. as per ASTM B-117. Process Standard P-41-B. When Zinc is specified Cadmium may be supplied.

S13 CHROME PLATE - BRIGHT. This is a composite electro-plate of copper, nickel and chromium. Steel and White Metal parts so plated shall withstand a 24 hour salt spray test on significant surfaces, except on threaded areas, etc. as per ASTM B-117. Process Standard P-40-B, D & K, except that minimum chromium thickness may be .000005 inches.

S15 OXIDIZED. This finish is to provide a dull black color on copper plated, copper bearing, stainless steel or steel parts. Where copper is present it is obtained by dipping in a sulphide solution. On rustless steel or steel parts, the finish may be produced by heat or chemical means. (Oxidation is used for appearance only; it has no corrosion resistant qualities.)

S16 LEAD PLATE. This is an electro-plate coating of lead of .0003 in. minimum.

S18 CASE HARDENED. This is a skin hardening treatment of steel not exceeding .25% carbon content. To obtain the required toughness and surface, heat treat according to HT4-2 Case depth .003 in. to .005 in. Resultant surface to be file hard.

S20 CEMENT COAT. This is a procedure to be approved by Manufacturing Staff.

S26 CADMIUM OR ZINC PLATE AND ENAMEL. This finish covers an electro-plate or either Cadmium or Zinc of .00015 in. minimum. A coating of enamel is to be applied over the plated parts. Enamel coat must be such that irritations and infections are avoided since these parts are to be handled by mouth.

S27 SCREW BLANK. This Specification is not to be issued as an Engineering Specification; it is required for Manufacturing purposes, such as material handling and inventory.

S28 STERILE COATING. This is a coating of enamel, lacquer or oxide, treated to eliminate irritation and infection from parts to be handled by mouth. Such parts must be packaged in suitable sterilized containers so that they will be free from contamination upon receival. Specification S26 may be used when S28 is specified. Parts so specified must meet the following tests:

1. Complete coverage to be tested by placing parts in a slightly acid copper-sulphate solution. There must be no immersion copper deposited on the parts.

2. Good adhesion and uniform coverage. Acceptance or rejection to be determined by the Quality Control Laboratory or Chemical Engineering Department.

3. No water soluble constituents. When parts are placed in distilled water the resulting solution must be neither acid nor basic.

S10 TINNED. Tin coating to be used on either copper or brass may be obtained by immersion or electro-deposition. Tin coating on steel parts shall be applied by electro-deposition with a .0001 in. nominal coat. Process Standard P-4-B. For emergency conditions, when tin is not available, an electro-galvanized coating of comparable quality may be substituted.

S13 CHROME PLATE - BRIGHT. This is a composite electro-plate of copper, nickel and chromium. Steel and White Metal parts so plated shall withstand a 24 hour salt spray test on significant surfaces, except on threaded areas, etc. as per ASTM B-117. Process Standard P-40-B, D & K, except that minimum chromium thickness may be .000005 inches. Specified plate thickness is not required inside the driving recess.

S15 OXIDIZED. This finish is to provide a dull black color on copper plated, copper bearing, stainless steel or steel parts. Where copper is present it is obtained by dipping in a sulphide solution. On rustless steel or steel parts, the finish may be produced by heat or chemical means. (Oxidation is used for appearance only; it has no corrosion resistant qualities.)

S16 LEAD PLATE. This is an electro-plate coating of lead of .0003 in. minimum.

S18 CASE HARDENED. This is a skin hardening treatment of steel not exceeding .25% carbon content. To obtain the required toughness and surface, heat treat according to HT4-2 Case depth .003 in. to .005 in. Resultant surface to be file hard.

S20 CEMENT COAT. This is a procedure to be approved by Manufacturing Staff.

S26 CADMIUM OR ZINC PLATE AND ENAMEL. This finish covers an electro-plate or either Cadmium or Zinc of .00015 in. minimum. A coating of enamel is to be applied over the plated parts. Enamel coat must be such that irritations and infections are avoided since these parts are to be handled by mouth.

S27 SCREW BLANK. This Specification is not to be issued as an Engineering Specification; it is required for Manufacturing purposes, such as material handling and inventory.

S28 STERILE COATING. This is a coating of enamel, lacquer or oxide, treated to eliminate irritation and infection from parts to be handled by mouth. Such parts must be packaged in suitable sterilized containers so that they will be free from contamination upon receival. Specification S26 may be used when S28 is specified. Parts so specified must meet the following tests:

1. Complete coverage to be tested by placing parts in a slightly acid copper-sulphate solution. There must be no immersion copper deposited on the parts.

S32 PAINT. This is a finish that will withstand 96 hour salt spray test on significant surfaces, except on threaded areas, etc. as per ASTM B-117. It consists of Phosphate coat and Black or Olive Drab Enamel as per Paint Process Specification C-91; however, Olive Drab is acceptable only on hidden spring temper clips and fasteners.

S34 CASE HARDEN AND CADMIUM PLATE. This is a combination of two finishes: S18 initially and S7 subsequently, dipped in green stain to distinguish S34 finish parts from S7 finish parts.

S35 ZINC COAT. This finish is non-electrolytic (not hot dip) followed by dichromate treatment. Parts plated under this Specification have a minimum coating thickness of .0003 in. to .0002 in. and must withstand a 48 hour salt spray test on significant surfaces except on threaded areas, etc. as per ASTM B-117. Process Specification P-97-B.

S36 ZINC PLATE AND DICHROMATE. This finish is an electro-deposit of Zinc followed by dichromate treatment. Parts plated under this Specification have a minimum coating thickness of .00020 in. and must withstand a 32 hour salt spray test on significant surfaces, as per ASTM B-117. These requirements do not apply on surfaces such as threads, recesses and holes. Process Standard P-41-D. When Zinc is specified, Cadmium may be supplied. Color must be no darker than light amber.

S37 CHROME PLATE - BRIGHT. This is a composite electro-plate of copper, nickel and chromium. Steel and White Metal parts so plated shall withstand a 96 hour salt spray test on significant surfaces except on threaded areas, etc. as per ASTM B-117. Process Standard P-40-J & L. The minimum pitch diameter of external threads before plating may be reduced below the tabulated minimum by an amount equal to .0078 in. minus the allowance for the thread class. The minimum major diameter may be reduced by .0052 in. minus the allowance.

S38 RAVEN FINISH. This is a phosphate coating of even dark color without oil or wax for parts to be subsequently painted. Process Standard P-3-D.

S39 CADMIUM PLATE. This finish is an electro-deposit of cadmium. Parts plated under this Specification will have a minimum coating thickness of .0005 in. and must withstand a 96 hour salt spray test on significant surfaces, except on threaded areas, etc. as per ASTM B-117. Process Standard P-41-A. The minimum pitch diameter of external threads before plating may be reduced below the tabulated minimum by an amount equal to .003 in. minus the allowance for the thread class. The minimum major diameter may be reduced by .002 in. minus the allowance.

S28 STERILE COATING (Cont'd).

2. Good adhesion and uniform coverage. Acceptance or rejection to be determined by the Quality Control Laboratory or Chemical Engineering Department.

3. No water soluble constituents. When parts are placed in distilled water the resulting solution must be neither acid nor basic.

S32 PAINT. This is a finish that will withstand 96 hour salt spray test on significant surfaces, except on threaded areas, etc. as per ASTM B-117. It consists of Phosphate coat and Black or Olive Drab Enamel as per Paint Process Specification C-91; however, Olive Drab is acceptable only on hidden spring temper clips and fasteners.

S34 CASE HARDEN AND CADMIUM PLATE. This is a combination of two finishes: S18 initially and S7 subsequently, dipped in green stain to distinguish S34 finish parts from S7 finish parts.

S35 ZINC COAT. This finish is non-electrolytic (not hot dip) followed by dichromate treatment. Parts plated under this Specification have a minimum coating thickness of .0003 in. to .0002 in. and must withstand a 48 hour salt spray test on significant surfaces except on threaded areas, etc. as per ASTM B-117. Process Specification P-97-B.

S36 ZINC PLATE AND DICHROMATE. This finish is an electro-deposit of Zinc followed by dichromate treatment. Parts plated under this Specification have a minimum coating thickness of .00020 in. and must withstand a 32 hour salt spray test on significant surfaces, as per ASTM B-117. These requirements do not apply on surfaces such as threads, recesses and holes. Process Standard P-41-D. When Zinc is specified, Cadmium may be supplied. Color must be no darker than light amber.

S37 CHROME PLATE - BRIGHT. This is a composite electro-plate of copper, nickel and chromium. Steel and White Metal parts so plated shall withstand a 96 hour salt spray test on significant surfaces except on threaded areas, etc. as per ASTM B-117. Process Standard P-40-J & L. Specified plate thickness is not required inside the driving recess. The minimum pitch diameter of external threads before plating may be reduced below the tabulated minimum by an amount equal to .0078 in. minus the allowance for the thread class. The minimum major diameter may be reduced by .0052 in. minus the allowance.

S38 RAVEN FINISH. This is a phosphate coating of even dark color without oil or wax for parts to be subsequently painted. Process Standard P-3-D.

S39 CADMIUM PLATE. This finish is an electro-deposit of cadmium. Parts plated under this Specification will have a minimum coating thickness of .0005 in. and must withstand a 96 hour salt spray test on significant surfaces, except on threaded areas, etc. as per ASTM B-117. Process Standard P-41-A. The minimum pitch

S40 ZINC PLATE. This finish is an electro-deposit of zinc. Parts plated under this Specification will have a minimum coating thickness of .0005 in. and must withstand a 96 hour salt spray test on significant surfaces, except on threaded areas, etc. as per ASTM B-117. Process Standard P-41-A. The minimum pitch diameter of external threads before plating may be reduced below the tabulated minimum by an amount equal to .003 in. minus the allowance for the thread class. The minimum major diameter may be reduced by .002 inch minus the allowance. Cadmium may be supplied in place of zinc.

S41 PRE-GALVANIZED COAT. This finish is a pre-coating of flexible zinc on steel wire or sheet which will render the material corrosion resistant after forming. Coating must be free from visible imperfections such as pits, slivers, breaks, etc. Parts with this finish must withstand 24 hour salt spray test, except on sheared edges or ends as per ASTM B-117. Parts in the assembly which are not galvanized must conform to S-8 Finish.

S42 ZINC OR CADMIUM PLATE - BLACK. This finish is an electro deposit of Zinc or Cadmium plus a black conversion coating (electrolytic or non electrolytic). Parts plated under this specification shall have a minimum plate thickness of .00015 in. and must withstand a 24 hour salt spray test on significant surfaces, except threaded areas, etc. as per ASTM B-117. Process Standard P-41-C. For hardened parts where hydrogen embrittlement may occur, parts must be treated to prevent embrittlement; cadmium plate must be used where zinc plated parts cannot be satisfactorily treated.

S91 O-RING MATERIAL. M-2D40-A, Oil resistant synthetic rubber, identified by one yellow stripe.

S92 O-RING MATERIAL. M-2D40-B, Gasoline resistant synthetic rubber, identified by one red stripe.

S93 O-RING MATERIAL. M-2D40-C, Non-mineral oil resistant synthetic rubber, identified by one green stripe.

S94 O-RING MATERIAL. M-6342-A, Hot automatic transmission fluid resistant synthetic rubber, identified by one blue stripe.

S100 SPECIAL. Suffix in this series may be used only with six (6) digit utility numbers and indicate that special specifications are shown on the face of the drawing.

Paint, Material and Process Specifications referred to above, may be obtained from Manufacturing Staff.

S39 CADMIUM PLATE (Cont'd).
diameter of external threads before plating may be reduced below the tabulated minimum by an amount equal to .003 in. minus the allowance for the thread class. The minimum major diameter may be reduced by .002 in. minus the allowance.

S40 ZINC PLATE. This finish is an electro-deposit of zinc. Parts plated under this Specification will have a minimum coating thickness of .0005 in. and must withstand a 96 hour salt spray test on significant surfaces, except on threaded areas, etc. as per ASTM B-117. Process Standard P-41-A. The minimum pitch diameter of external threads before plating may be reduced below the tabulated minimum by an amount equal to .003 in. minus the allowance for the thread class. The minimum major diameter may be reduced by .002 inch minus the allowance. Cadmium may be supplied in place of zinc.

S41 PRE-GALVANIZED COAT. This finish is a pre-coating of flexible zinc on steel wire or sheet which will render the material corrosion resistant after forming. Coating must be free from visible imperfections such as pits, slivers, breaks, etc. Parts with this finish must withstand 24 hour salt spray test, except on sheared edges or ends as per ASTM B-117. Parts in the assembly which are not galvanized must conform to S-8 Finish.

S42 ZINC OR CADMIUM PLATE - BLACK. This finish is an electro deposit of Zinc or Cadmium plus a black conversion coating (electrolytic or non electrolytic). Parts plated under this specification shall have a minimum plate thickness of .00015 in. and must withstand a 24 hour salt spray test on significant surfaces, except threaded areas, etc. as per ASTM B-117. Process Standard P-41-C. For hardened parts where hydrogen embrittlement may occur, parts must be treated to prevent embrittlement; cadmium plate must be used where zinc plated parts cannot be satisfactorily treated.

S91 O-RING MATERIAL. M-2D40-A, Oil resistant synthetic rubber, identified by one yellow stripe.

S92 O-RING MATERIAL. M-2D40-B, Gasoline resistant synthetic rubber, identified by one red stripe.

S93 O-RING MATERIAL. M-2D40-C, Non-mineral oil resistant synthetic rubber, identified by one green stripe.

S94 O-RING MATERIAL. M-6342-A, Hot automatic transmission fluid resistant synthetic rubber, identified by one blue stripe.

S100 SPECIAL. Suffix in this series may be used only with six (6) digit utility numbers and indicate that special specifications are shown on the face of the drawing.

Paint, Material and Process Specifications referred to above, may be obtained from Manufacturing Staff.

PHYSICAL REQUIREMENTS

FORD	S. A. E. GRADE	STEEL*	FORD STEEL*	MINIMUM TENSILE STRENGTH (Lb./sq. in.)	PROOF LOAD PSI	HARDNESS# (BHN)	HARDNESS# ROCKWELL	HEAT TREATMENT
M-3500-A	2	AISI-C 1013 SAE 1015 SAE 1016 SAE 1017 SAE 1018 SAE 1019 SAE 1020 SAE 1022	G GG	1/2" & under 69,000 over 1/2" to 3/4" incl. 64,000	55,000 52,000	241 max. 241 max.	100B max. 100B max.	Carriage head and other bolts with similar thin heads must be stress relieved at 1150°-1200°F for one hour minimum. When this is done, physical requirements do not apply.
M-3500-B		SAE 1030	E	1/2" & under 85,000 over 1/2" to 3/4" incl. 80,000	65,000 60,000	183-281 163-281	90-105B 85-105B	May be stress relieved to reduce hardness within specified range.
M-3500-C	3	SAE 1038 SAE 1040 SAE 1042 SAE 1043 SAE 1046	EE EEE EEEE	1/2" & under 110,000 over 1/2" to 5/8" incl. 100,000	85,000 80,000	207-302 201-302	95-107B 94-107B	Stress relieve at 800°F min. for one hour at heat min.
M-3500-E	5	SAE 1038 (coarse grain) SAE 1040 (coarse grain) SAE 1042 SAE 1043	EE EEE	Up to 3/4" incl. 120,000 over 3/4" to 1" incl. 115,000 over 1" to 1-1/2" 105,000	85,000 78,000 74,000	248-321 235-321 229-302	24-34C 22-34C 20-32C	Heat to 1500°-1600°F. Oil quench. Draw at approx. 800°F. to Hardness shown.
M-3500-F	6	SAE 1041		5/8" & under 140,000 over 5/8" to 3/4" incl. 133,000	110,000 105,000	285-331 269-331	30-36C 28-36C	Heat to 1550°-1625°F. Oil quench. Draw at approx. 800°F. to Hardness shown.
M-3500-G	8	Alloy steel of recognized AISI or SAE analysis within the range of .30 - .45 carbon. SAE 1041 steel is permitted for bolts 1/2" diameter and under. All steels must have sufficient hardenability to assure a minimum "as quenched" hardness of Rockwell C 45 at the center of the threaded section of the bolt when quenched in oil.		All sizes 150,000	120,000	311-363	33-39C	Heat to 1500°-1550°F. Oil quench. Draw at approx. 800°F. to Hardness shown. When SAE 1041 steel is used, heat to 1550°-1625°F.
M-3500-J	8	SAE 4135 SAE 4137 SAE 4140 SAE 4142 SAE 8637 SAE 8640 SAE 8642 SAE 8740		All sizes 150,000	120,000	311-363	33-39C	Heat to 1500°-1550°F. Oil quench. Draw at approx. 800°F. to Hardness shown.

The above manufacturing processes and materials are specified as listed for each grade. Any deviation from this specification must be approved by engineering change or deviation.
An upgraded chemistry is an acceptable substitute, provided all physical properties of specified grade are met.

THE FOLLOWING OPTIONS ARE ACCEPTABLE UNLESS OTHERWISE SPECIFIED

Bolt Specifications	Approved Options
M-3500-A	M-3500-B-C-E-F-G or J
M-3500-B	M-3500-C-E-F-G or J
M-3500-C	M-3500-E-F-G or J
M-3500-E	M-3500-F-G or J
M-3500-F	M-3500-G or J
M-3500-G	M-3500-J

Minimum hardness requirements will be waived provided other requirements are met. Maximum hardness specifications must not be exceeded.
NOTE: -- SAE TEST METHODS.

* For Reference Only - Do Not Specify on Drawing.

FORD MOTOR COMPANY
STANDARD PARTS

PENETRATION GAGES AND GAGING FOR CROSS RECESSED HEAD SCREWS

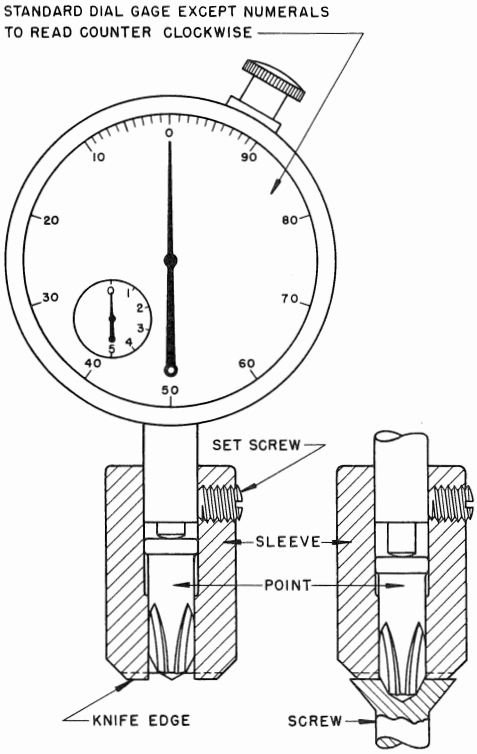

IN ZERO POSITION — IN GAGING POSITION

PENETRATION GAGE

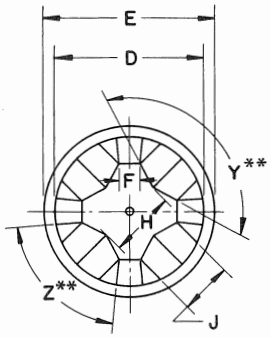

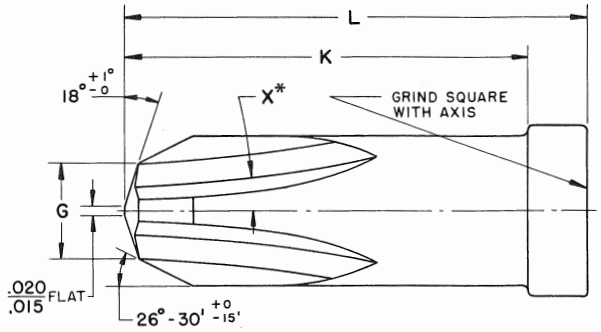

DETAIL OF POINT

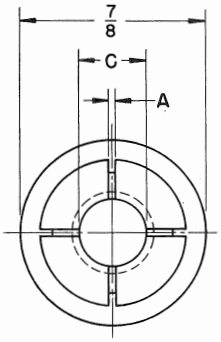

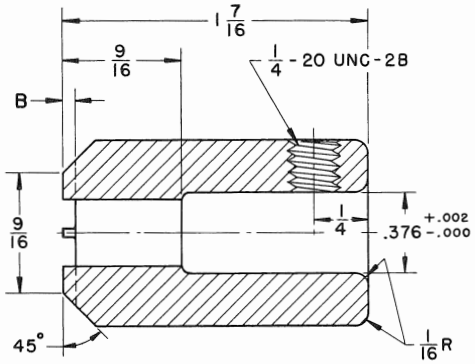

DETAIL OF SLEEVE

Recess Size Number	A Knife Width	B Knife Height	C Hole Dia.	D Dia.	E Collar Dia.	F Wing Thickness Max.	F Wing Thickness Min.	G Point Width	H Point Width	J Flute Width at Bottom	K End to Collar	L Length	X* Mill-ing Angle	Y** Base Flute Angle	Z** Side Flute Angle
	±.002	±.003	±.0001	±.0001	±.005	Max.	Min.	+.001 -.000	+.000 -.001	+.000 -.001	±.005	±.005	+0 -15'	+15' -0	+15' -0
1	.012	.020	.0875	.0871	.156	.021	.018	.050	.0394	.0202	.688	.812	7°	138°	92°
2	.018	.031	.1417	.1413	.219	.028	.025	.090	.0606	.0434	.750	.875	5° 45'	140°	92°
3	.022	.037	.2097	.2093	.250	.033	.030	.150	.0983	.0826	.781	.906	5° 45'	146°	92°
4	.031	.062	.3126	.3122	.359	.045	.042	.200	.1407	.1078	.844	.969	7°	153°	92°

* Angle with respect to axis of point at which flutes are milled.
** Angles specified in the table are the angles on the milling cutters.
Tolerance on dimensions not otherwise limited shall be ±.005.

GENERAL

Penetration gaging shall be an arbitrary test to determine suitability of the recesses in the heads of screws and may be used to indicate deficiencies in the dimensions of the recesses specified in the dimensional tables. However, the penetration gaging test in itself shall not be cause for rejection of the screws should the screws meet all other dimensional requirements.

Specified above are dimensions of gage points to be used for penetration gaging. In all cases, the gage points simulate perfect driver form. Also specified are gage sleeves which adapt the gage points to standard dial gages. Penetration gaging values for the various styles of recessed heads are included in the dimensional tables for the heads.

Penetration is gaged relative to a reference plane defined by the intersection of the edge of the recess wings with the top surface of the screw head. This plane is the same as the top surface of a flat head screw but is somewhat below the topmost portion of heads which have crowned tops. Knife edges on the gage sleeve are used to establish the reference plane. A reverse reading dial gage is used to indicate the penetration of the gage point into the recess. The gage may be zeroed on any flat surface.

Penetrations which are too deep indicate the possibility of a thin section between head and shank of screw, a weakness which might result in twisting-off of screw heads during tightening of the screws. Use of screws having shallow penetrations might result in production problems such as reaming of recesses or excessive wear on driver bits.

PROTRUSION GAGES AND GAGING FOR FLAT HEAD SCREWS

Suitability of flat head screws except for #0 and #1 undercut heads, for application in countersinks designed to the principal dimensions of the screw may be tested by use of a protrusion gage as shown in the figure below.

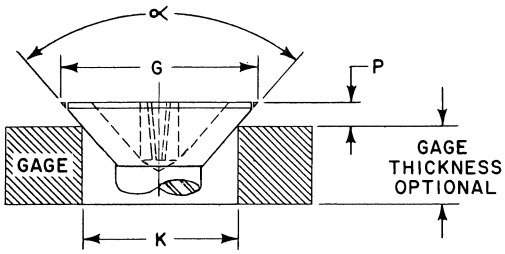

The gaging dimensions and the gage diameters are specified in the dimensional tables for flat head and undercut flat head screws. The protrusion limits shown in the tables apply when the gaging diameter is exactly as indicated with the gaging edge of a sharpness obtained by lapping the hole and the top surface of the gage. Any variation in the gaging diameter will require either recalculation of protrusion values by the original formulae or a proportional correction of the tabulated values.

Original Protrusion Formulas:

$$\text{(a) Maximum Protrusion } (F) = \frac{\text{Max Sharp Dia } (G) - \text{Gage Hole Dia } (K)}{2} \times \text{Tan}\left(90^{\circ} - \frac{\text{Min Head Angle } (\propto)}{2}\right)$$

$$\text{(a) Minimum Protrusion } (F) = \frac{\text{Min Sharp Dia } (G) - \text{Gage Hole Dia } (K)}{2} \times \text{Tan}\left(90^{\circ} - \frac{\text{Max Head Angle } (\propto)}{2}\right)$$

Proportional Correction Formulas:

$$P^1 = P \left(\frac{G - K^1}{G - K}\right)$$

where
- $\propto$ = Included angle of head
- P = Tabulated protrusion value
- P^1 = Corrected protrusion value
- G = Head diameter (Maximum or minimum for maximum or minimum protrusion respectively)
- K = Tabulated gage diameter
- K^1 = Measured gage diameter

Protrusion values shown in the tables were calculated with these formulas and rounded to the nearest thousandth, upward for the maximum and downward for the minimum. To insure adequate service life, the protrusion gage should be made of tool steel having hardness of not less than 60 Rockwell C.

ACROSS CORNER GAGES AND GAGING FOR HEXAGON HEAD SCREWS

Suitability of across corners dimensions of hexagon head and hexagon washer head screws may be determined by the use of gaging rings.

When the gaging ring is placed on the head of a hexagon or hexagon washer head screw at right angles to the axis of the screw, the hexagon portion of the head must protrude beyond the ring by an amount equal to 60 per cent of the minimum head height "H". For convenience, the minimum protrusion values are given below. Values apply only to screw heads conforming to specifications given below. All others to which this standard applies. must be computed.

	Screw Size	2	3	4	5	6	8	10	12	1/4	5/16	3/8
G	Min. Width Across Corners of Hexagon	.134	.134	.202	.202	.272	.272	.340	.340	.409	.545	.614
K	Inside Diameter of Gage +.0003, -.0000	.1340	.1340	.2020	.2020	.2720	.2720	.3400	.3400	.4090	.5450	.6140
H	Minimum Head Height "H"	.040	.044	.049	.058	.080	.096	.105	.139	.172	.208	.270
V	Washer Thickness	.010	.010	.011	.015	.015	.019	.019	.022	.030	.035	.037
P	Protrusion Beyond Gaging Ring "F"	.024	.026	.029	.035	.048	.058	.063	.083	.103	.125	.162

The gaging ring shall have an inside diameter equal to the tabulated minimum width across corners dimensions, within a plus tolerance of .0003 inch. The gaging edges of the ring shall be sharp and opposite faces shall be parallel. To insure adequate service life, the ring should be made of tool steel and have a hardness not less than 60 Rockwell C.

A sample gaging fixture is shown below with an explanation of its application; however, any equivalent means may be used.

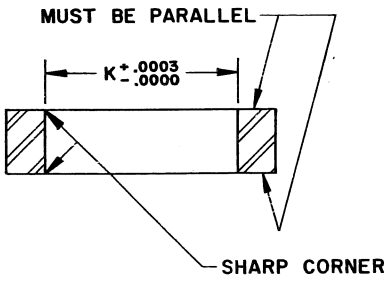

GAGING RING

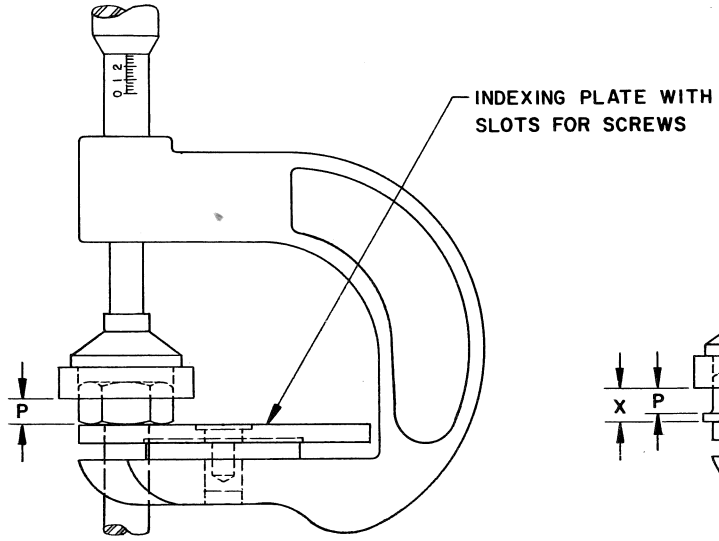

GAGING HEXAGON HEAD

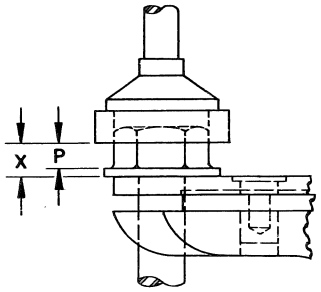

GAGING HEXAGON WASHER HEAD

TYPICAL GAGING FIXTURE

To check hexagon head screws an initial reading shall be taken with the gaging ring placed on the indexing plate. Then, with the screw and the gaging ring placed in the fixture, a second reading is taken. The difference between the two readings is equal to the protrusion "P" of the head beyond the gaging ring.

To check hexagon washer head screws, the gaging procedure is exactly the same as for checking hexagon head screws except that the difference between the two readings (X) includes the washer thickness. Therefore, it is necessary to subtract the thickness of the washer portion (V) from the "X" dimension to obtain the protrusion "P" of the hexagon beyond the gaging ring.

UNIFIED SCREW THREADS

SECTION 1—INTRODUCTION

This revision of the Ford Screw Thread Standard conforms in essentials with the American Standard ASA B1.1-Unified Screw Threads, and the SAE Screw Thread Standard. Those threads which conform to the Formulas accepted by the standardization committees of Canada, the United Kingdom, and the United States, as signalized by the signing of an Accord at Washington, D. C., on November 18, 1948, are designated as Unified standard threads. The Unified standard threads generally supersede the previously published American National threads, data for which are published as useful information in this standard.

The Unified thread form is the basis of all thread dimensions given in this standard. The essential features of this thread form are shown in Figure 1. Unified and American threads have substantially the same thread form, and the threads of both standards having the same diameter and pitch are mechanically interchangeable. The principle differences between these standards relate to the application of allowances, the variation of tolerances with size, differences in the amounts of pitch diameter tolerances for external and internal threads, and differences in thread designations.

The content of the standard is much the same as the previous Ford Standard; Major changes are (1) addition of 4, 6, 20, 38 and 32 constant pitch series threads as standard series threads (2) separation of Unified and American National threads, the latter being placed in Appendix J (3) wider coverage of Unified threads by use of the prefix "U" in the symbol for all machine screw sizes, additional constant pitch series threads and special threads computed on the basis of Unified formulas and (4) clarifications of designations.

Tabular information for screw threads is not included, but is contained in Engineering Standard EG-100. This will be furnished to holders of this manual upon request.

SECTION 2—THREAD SERIES AND SUGGESTED APPLICATIONS

Thread series are groups of diameter and pitch combinations distinguished from each other by the number of threads per inch applied to a specific diameter. The various diameter-pitch combinations of eleven standard series that are common to the British and Canadian Standards are shown in Table 1, and the symbols for designating the various thread series are shown in the dimensional tables. The limiting dimensions of selected thread sizes from the standard series with graded pitches are given in Table 2. Those threads which are Unified form and calculated to Unified formulation whether tabulated or not are known as Unified. They are identified by the prefix letter "U" in the symbol.

COARSE THREAD SERIES. The coarse thread series, UNC, is generally utilized for the bulk production of bolts, screws, nuts and other general engineering applications. It is used in general applications for threading into lower tensile strength materials such as cast iron, mild steel and softer materials (bronze, brass, aluminum, magnesium and plastics) to obtain the optimum resistance to stripping of the internal thread. It is applicable for rapid assembly or disassembly, or if corrosion or slight damage is possible.

FINE THREAD SERIES. The fine thread series, UNF, is suitable for the production of bolts, screws, nuts and other applications where the coarse series is not applicable. External threads of this series have greater tensile stress area than comparable sizes of the coarse series. The fine series is suitable when the resistance to stripping of both external and mating internal threads equals or exceeds the tensile load carrying capacity of the externally threaded member. It is also used where the length of engagement is short, where a smaller lead angle is desired, or where the wall thickness demands a fine pitch. It may also be used for threading into lower strength materials where

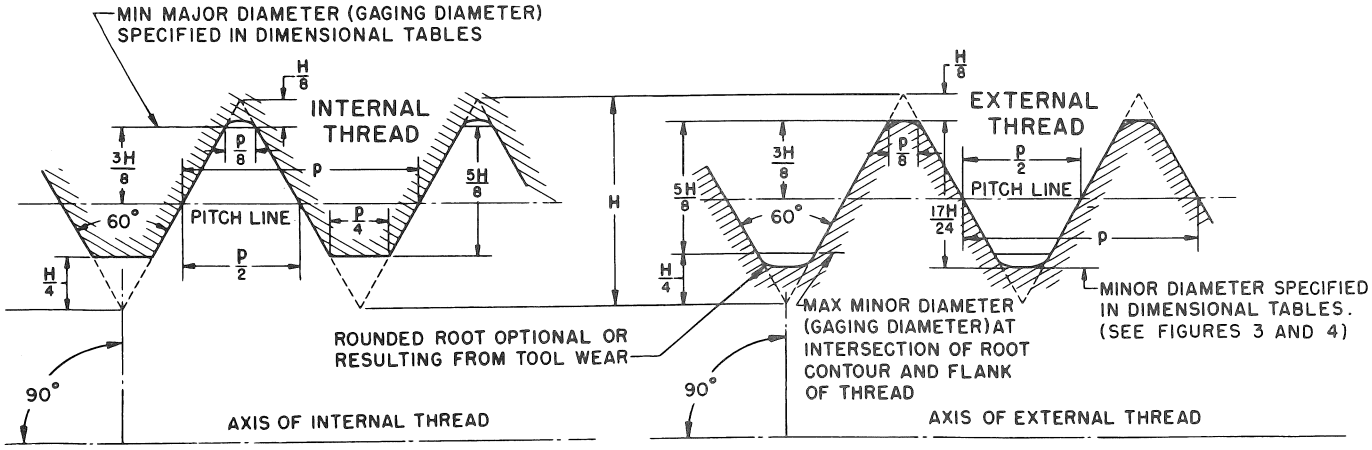

FIGURE 1—UNIFIED INTERNAL AND EXTERNAL THREAD DESIGN FORMS (MAXIMUM MATERIAL CONDITION)

(See Appendix B for formulas and basic thread data)

UNIFIED SCREW THREADS

maximum strength of the external thread is not required; otherwise the length of engagement must be selected to meet the above required strength conditions.

EXTRA-FINE THREAD SERIES. The extra-fine thread series, UNEF, is applicable where even finer pitches of threads are desirable for short lengths of engagement and for thin-walled tubes, nuts, ferrules, or couplings. It is also generally applicable under the conditions stated above for the fine threads.

CONSTANT PITCH SERIES. The various constant pitch series, UN, with 4, 6, 8, 12, 16, 20, 28 and 32 threads per inch, given in Table 1, offer a comprehensive range of diameter-pitch combinations for those purposes where the threads in the Coarse, Fine, and Extra-Fine series do not meet the particular requirements of the design.

When selecting threads from these constant pitch series, preference should be given wherever possible to those tabulated in the 8, 12, or 16 thread series.

8 THREAD SERIES. The 8 thread series (8 UN) is a uniform pitch series for large diameters. Although originally intended for high-pressure-joint bolts and nuts, it is now widely used as a substitute for the coarse thread series for diameters larger than 1 in.

12 THREAD SERIES. The 12 thread series (12UN) is a uniform pitch series for large diameters requiring threads of medium-fine pitch. Although originally intended for boiler practice, it is now used as a continuation of the fine thread series for diameters larger than 1-1/2 in.

16 THREAD SERIES. The 16 thread series (16UN) is a uniform pitch series for large diameters requiring fine-pitch threads. It is suitable for adjusting collars and retaining nuts, and also serves as a continuation of the extra-fine thread series for diameters larger than 1-11/16 in.

HIGH-TEMPERATURE, HIGH-STRENGTH APPLICATIONS. For these applications the coarse thread series is recommended in sizes from 1/4 to 1 inch and the 8 thread series in sizes over 1 inch. Limits of size are given in Table 2. Some high-temperature applications involving special physical characteristics or conditions may require modification of dimensions, and it is recommended that when such are necessary they be applied to the external thread.

SELECTED COMBINATIONS. Thread data are tabulated in Table 3 for some constant pitch and special series selected special combinations of diameter and pitch, with pitch diameter tolerances based on a length of thread engagement of 9 times the pitch. The pitch diameter limits are applicable to a length of engagement of from 5 to 15 times the pitch. (This should not be confused with the lengths of thread on mating parts, as they may exceed the length of engagement by a considerable amount.) Unified thread symbols in Table 3 are UNS.

FINE THREADS FOR THIN-WALL TUBING. The limits of size for a 27 thread series, ranging from 1/4 to 1 inch nominal size, are included in Table 3. These threads are recommended for general use on thin-wall tubing. The minimum length of complete thread shall be one third of the basic major diameter plus 5 threads (plus 0.185 in.).

THREADS OF SPECIAL DIAMETERS, PITCHES, AND LENGTHS OF ENGAGEMENT. Thread data are given in Tables 28 through 37 for the range of combinations of diameter, pitch, and length of engagement which is encompassed by the fundamental limitations of design. (See "Limitations of Design."). When design considerations require nonstandard pitches or extreme conditions of engagement not covered by the tables, the allowance and tolerances should be derived from the formulas in Appendix G or in the tolerance table notes. The thread symbol, UNS, applies to diameter-pitch combinations that are not included in Table 1, provided that the tolerances and allowances are computed on the basis of the tables and/or unified formulas in the standard.

SECTION 3—SCREW THREAD CLASSES

Thread classes are distinguished from each other by the amount of the tolerance and allowance. Classes 1A, 2A, and 3A apply to external threads, and Classes 1B, 2B, and 3B apply to internal threads.

Classes in which the numeral is followed by letters A or B are derived from Unified formulas based on increments of basic major (nominal) diameter, pitch, and length of engagement. The formulas and the identification or symbols apply to Unified standard threads.

The pitch diameter tolerances and allowances for Unified thread classes are derived from formulas established for Class 2A. (See Appendixes C and E.)

CLASSES 2A AND 2B. Classes 2A and 2B are the recognized standard for production of bolts, screws, nuts, and commercially threaded fasteners. They are suitable for a wide variety of other applications.

Maximum diameters of Class 2A are less than basic by the amount of an allowance. The allowance minimizes galling and seizing in high-cycle wrench assembly. The allowance can also accommodate plated finishes or other coatings. It permits specification of a minimum plating or coating thickness equal to one-sixth of the allowance. If the minimum thickness of plating or coating exceeds one-sixth of the allowance, special provisions are necessary. Minimum diameter limits apply to unplated threads and to plated threads before plating unless otherwise specified (See Section 6). The maximum diameters of plated

UNIFIED SCREW THREADS

TABLE I - UNIFIED SCREW THREAD STANDARD SERIES

Nominal Size		Basic Major Diameter	Graded Pitch Series			Constant Pitch Series[a]								Nominal Size
Primary	Secondary		Coarse UNC	Fine UNF	Extra-Fine UNEF	4 UN	6 UN	8 UN[b]	12 UN[b]	16 UN[b]	20 UN	28 UN	32 UN	
			Threads Per Inch											
0		0.0600	—	80	—	—	—	—	—	—	—	—	—	0
	1	0.0730	64	72	—	—	—	—	—	—	—	—	—	1
2		0.0860	56	64	—	—	—	—	—	—	—	—	—	2
	3	0.0990	48	56	—	—	—	—	—	—	—	—	—	3
4		0.1120	40	48	—	—	—	—	—	—	—	—	—	4
5		0.1250	40	44	—	—	—	—	—	—	—	—	—	5
6		0.1380	32	40	—	—	—	—	—	—	—	—	UNC	6
8		0.1640	32	36	—	—	—	—	—	—	—	—	UNC	8
10		0.1900	24	32	—	—	—	—	—	—	—	—	UNF	10
	12	0.2160	24	28	32	—	—	—	—	—	—	UNF	UNEF	12
1/4		0.2500	20	28	32	—	—	—	—	—	UNC	UNF	UNEF	1/4
5/16		0.3125	18	24	32	—	—	—	—	—	20	28	UNEF	5/16
3/8		0.3750	16	24	32	—	—	—	—	UNC	20	28	UNEF	3/8
7/16		0.4375	14	20	28	—	—	—	—	16	UNF	UNEF	32	7/16
1/2		0.5000	13	20	28	—	—	—	—	16	UNF	UNEF	32	1/2
9/16		0.5625	12	18	24	—	—	—	UNC	16	20	28	32	9/16
5/8		0.6250	11	18	24	—	—	—	12	16	20	28	32	5/8
	11/16	0.6875	—	—	24	—	—	—	12	16	20	28	32	11/16
3/4		0.7500	10	16	20	—	—	—	12	UNF	UNEF	28	32	3/4
	13/16	0.8125	—	—	20	—	—	—	12	16	UNEF	28	32	13/16
7/8		0.8750	9	14	20	—	—	—	12	16	UNEF	28	32	7/8
	15/16	0.9375	—	—	20	—	—	—	12	16	UNEF	28	32	15/16
1		1.0000	8	12	20	—	—	UNC	UNF	16	UNEF	28	32	1
	1-1/16	1.0625	—	—	18	—	—	8	12	16	20	28	—	1-1/16
1-1/8		1.1250	7	12	18	—	—	8	UNF	16	20	28	—	1-1/8
	1-3/16	1.1875	—	—	18	—	—	8	12	16	20	28	—	1-3/16
1-1/4		1.2500	7	12	18	—	—	8	UNF	16	20	28	—	1-1/4
	1-5/16	1.3125	—	—	18	—	—	8	12	16	20	28	—	1-5/16
1-3/8		1.3750	6	12	18	—	UNC	8	UNF	16	20	28	—	1-3/8
	1-7/16	1.4375	—	—	18	—	6	8	12	16	20	28	—	1-7/16
1-1/2		1.5000	6	12	18	—	UNC	8	UNF	16	20	28	—	1-1/2
	1-9/16	1.5625	—	—	18	—	6	8	12	16	20	—	—	1-9/16
1-5/8		1.6250	—	—	18	—	6	8	12	16	20	—	—	1-5/8
	1-11/16	1.6875	—	—	18	—	6	8	12	16	20	—	—	1-11/16
1-3/4		1.7500	5	—	—	—	6	8	12	16	20	—	—	1-3/4
	1-13/16	1.8125	—	—	—	—	6	8	12	16	20	—	—	1-13/16
1-7/8		1.8750	—	—	—	—	6	8	12	16	20	—	—	1-7/8
	1-15/16	1.9375	—	—	—	—	6	8	12	16	20	—	—	1-15/16
2		2.0000	4½	—	—	—	6	8	12	16	20	—	—	2
	2-1/8	2.1250	—	—	—	—	6	8	12	16	20	—	—	2-1/8
2-1/4		2.2500	4½	—	—	—	6	8	12	16	20	—	—	2-1/4
	2-3/8	2.3750	—	—	—	—	6	8	12	16	20	—	—	2-3/8
2-1/2		2.5000	4	—	—	UNC	6	8	12	16	20	—	—	2-1/2
	2-5/8	2.6250	—	—	—	4	6	8	12	16	20	—	—	2-5/8
2-3/4		2.7500	4	—	—	UNC	6	8	12	16	20	—	—	2-3/4
	2-7/8	2.8750	—	—	—	4	6	8	12	16	20	—	—	2-7/8
3		3.0000	4	—	—	UNC	6	8	12	16	20	—	—	3
	3-1/8	3.1250	—	—	—	4	6	8	12	16	—	—	—	3-1/8
3-1/4		3.2500	4	—	—	UNC	6	8	12	16	—	—	—	3-1/4
	3-3/8	3.3750	—	—	—	4	6	8	12	16	—	—	—	3-3/8
3-1/2		3.5000	4	—	—	UNC	6	8	12	16	—	—	—	3-1/2
	3-5/8	3.6250	—	—	—	4	6	8	12	16	—	—	—	3-5/8
3-3/4		3.7500	4	—	—	UNC	6	8	12	16	—	—	—	3-3/4
	3-7/8	3.8750	—	—	—	4	6	8	12	16	—	—	—	3-7/8
4		4.0000	4	—	—	UNC	6	8	12	16	—	—	—	4
	4-1/8	4.1250	—	—	—	4	6	8	12	16	—	—	—	4-1/8
4-1/4		4.2500	—	—	—	4	6	8	12	16	—	—	—	4-1/4
	4-3/8	4.3750	—	—	—	4	6	8	12	16	—	—	—	4-3/8
4-1/2		4.5000	—	—	—	4	6	8	12	16	—	—	—	4-1/2
	4-5/8	4.6250	—	—	—	4	6	8	12	16	—	—	—	4-5/8
4-3/4		4.7500	—	—	—	4	6	8	12	16	—	—	—	4-3/4
	4-7/8	4.8750	—	—	—	4	6	8	12	16	—	—	—	4-7/8
5		5.0000	—	—	—	4	6	8	12	16	—	—	—	5
	5-1/8	5.1250	—	—	—	4	6	8	12	16	—	—	—	5-1/8
5-1/4		5.2500	—	—	—	4	6	8	12	16	—	—	—	5-1/4
	5-3/8	5.3750	—	—	—	4	6	8	12	16	—	—	—	5-3/8
5-1/2		5.5000	—	—	—	4	6	8	12	16	—	—	—	5-1/2
	5-5/8	5.6250	—	—	—	4	6	8	12	16	—	—	—	5-5/8
5-3/4		5.7500	—	—	—	4	6	8	12	16	—	—	—	5-3/4
	5-7/8	5.8750	—	—	—	4	6	8	12	16	—	—	—	5-7/8
6		6.0000	—	—	—	4	6	8	12	16	—	—	—	6

a Where the same thread appears in two series, the symbols of the graded pitch series are applicable. See Section 5.
b For other application of these series, see Section 2.

UNIFIED SCREW THREADS

or coated Class 2A threads are basic, and the minimum diameters of Class 2B threads, whether plated, coated, or plain finish (unplated), are basic, affording no allowance or clearance for assembly of maximum material components.

Certain applications require an allowance to permit application of the proper lubricant when making up the assembly, particularly with pressure vessels and steel pipe flanges, fittings, and valves for high-temperature, high-pressure service. For such applications Class 2A, which has an allowance, and Class 2B are recommended, replacing Class 7 which was previously established for such applications but which has been discontinued as an American standard. In this application, when the thread is coated, the 2A allowance may not be used to accommodate by such coating and the thread must be called out special as shown in the paragraph covering plated threads without an allowance in Section 6.

CLASSES 3A AND 3B. Classes 3A and 3B are useful where closer tolerances than those provided by Classes 2A and 2B are required. The maximum diameters of Class 3A threads and the minimum diameters of Class 3B threads, whether plated, coated, or plain finish (unplated) are basic, affording no allowance or clearance for assembly of maximum material components.

CLASSES 1A AND 1B. Classes 1A and 1B are used on threaded components where quick and easy assembly is necessary, where liberal allowance is required to permit ready assembly, even with slightly bruised or dirty threads.

Maximum diameters of Class 1A threads are less than basic by the amount of the Class 2A allowance. The space of the allowance, however, is not available for plating or coating. Where the thread is plated or coated, special provisions are necessary. The minimum diameters of Class 1B threads, whether plated, coated, or plain finish (unplated), are basic, affording no allowance or clearance for assembly with maximum material components having maximum diameters which are basic.

No provision is made for overcutting internal threads as coatings on such threads are not generally required. Further, it is very difficult to deposit a significant thickness of coating on the flanks of internal threads. Where a specific thickness of coating is required in an internal thread, it is suggested that the thread be overcut so that the thread as coated will be accepted by a GO thread plug gage of basic size.

SECTION 4—SCREW THREAD SELECTION

SCREW THREAD CLASS SELECTION. Requirements for specific applications are predicated on end use and can be met by specifying the proper combinations of thread classes for the components. For example, a Class 2A thread may be used with a Class 1B, 2B, 3B, or American National Class 2 or 3 thread.

SCREW THREAD SERIES SELECTION. WHEREVER POSSIBLE, SELECTION SHOULD BE MADE FROM THE STANDARD SERIES, PREFERENCE BEING GIVEN TO COARSE AND FINE THREADS. IF THE STANDARD SERIES DOES NOT MEET THE DESIGN REQUIREMENTS, SELECTION SHOULD BE MADE FROM THE SPECIAL SERIES. THE THIRD EXPEDIENT IS TO COMPUTE THE LIMITING DIMENSIONS FROM TABULATED TOLERANCES AND INCREMENTS FOR SPECIAL THREADS. (SEE OUTLINE GUIDES IN APPENDIX F.) THE FOURTH AND LAST RECOURSE IS CALCULATION BY FORMULA AS PRESCRIBED IN THE APPENDIXES.

SCREW THREAD TOLERANCE SELECTION. The tolerance for pitch diameter is cumulative, including variations for lead and angle. The required length of engagement is, therefore, the determining factor in the proper selection of a thread tolerance.

SECTION 5—SCREW THREAD ACCEPTANCE AND TOLERANCE BASIS

SCREW THREAD ACCEPTANCE. General practice as to the acceptability of threads shall be based on the following interpretations of pitch diameter limits of size and specifications of gages and gaging practices. It is automotive commercial practice to accept threads by ring and plug gaging; accordingly, it is recommended that all limits of size for commercial externally threaded parts shall be interpreted as virtual size limits described below.

With respect to the pitch diameter limits of size, it is intended, except as hereinafter qualified, that no portion of the complete thread be permitted to project beyond the envelope defined by the maximum and minimum material limits and thus be outside of the tolerance zone illustrated in Figures 3 and 4. Also, where single element size limits apply, it is intended that the diameter equivalent of the variation in any given element except pitch diameter, shall not exceed one-half of the pitch diameter tolerance. Elements, variations of which affect pitch diameter, include lead, uniformity of helix, flank angle, taper, out-of-roundness and surface defects. Flank angle equivalents shall be based on a depth of thread engagement of 5H/8.

At maximum material limits the diameter equivalents of variations in lead, uniformity of helix, and flank angle are always in the direction toward maximum material, that is they increase the virtual diameter of the external thread and decrease that of the internal thread. Thus the maximum material pitch diameter limits are a limitation of the virtual (effective) diameter and are so specified herein for all thread classes.

UNIFIED SCREW THREADS

The acceptability of threads at the maximum material limits shall be based on gaging with GO thread plug and ring gages conforming as closely as practicable to limits of size of the thread and to the thread form and length specified in ASA B1.2 for such gages.

At minimum material limits, diameter equivalents of variations in taper and roundness of the pitch diameter, together with variations of pitch diameter elements, may be in the direction of minimum material, and thus the minimum material pitch diameter limit may be specified as a limitation of the pitch diameter as a single element. However, in view of the inter-relation of the pitch diameter, variation in lead and flank angle, etc., together with practical considerations relating to established production processes, product application and inspection procedures, it has been customary to interpret the minimum pitch diameter of the external thread and the maximum pitch diameter of the internal thread as virtual (effective) diameters for application to various mass-produced bolts, nuts, screws, and other similar threaded fasteners, and to some custom threaded parts where design requirements are fulfilled. Thus, the minimum pitch diameter limits of all Classes 1A and 2A external threads as specified herein are virtual diameter limits and those of Class 3A external threads as specified herein are a limitation of the pitch diameter as a single element; also the maximum pitch diameter limits of all classes of internal threads as specified herein are virtual diameter limits.

Where virtual minimum material size limits apply to external threads, it is intended that the sum of the diameter equivalents of all element variations which affect pitch diameter, shall not exceed one-half of the pitch diameter tolerance; thus, the single element pitch diameter may not be more than one-half the pitch diameter tolerance smaller than the minimum virtual pitch diameter.

Where it is desired to gage the pitch diameter of Class 3A external threads as virtual diameter limits, the words "VIRTUAL GAGING" should be included in the drawing thread note. Conversely, where it is desired to gage the pitch diameter of Classes 1A and 2A external threads as a single element, the words "ELEMENT GAGING" should be included in the drawing thread note. These deviations from general practice may also be accomplished by suitable reference to product specifications.

The acceptability of threads at the minimum material limits, when such limits are specified as virtual diameter limits, shall be based on gaging with HI-LO (formerly NOT GO) thread plug and ring gages conforming as closely as practicable to the minimum material pitch diameter limit of the thread and to the thread form and length specified in ASA B1.2 for such gages.

When minimum material pitch diameter limits are specified as a limitation of the pitch diameter as a single element, the acceptability of threads shall be based on gaging with HI-LO (formerly NOT GO) thread snap or indicating gages which engage the thread over a length not exceeding three pitches and otherwise conform as closely as practicable to the minimum material pitch diameter limit of the thread and to the thread form specified in the ASA B1.2 for such gages.

PITCH DIAMETER TOLERANCE BASIS. The pitch diameter tolerances specified in Table 2 for all classes of the UNC and UNF series are based on a length of engagement equal to the basic major (nominal) diameter and are applicable for lengths of engagement up to 1-1/2 diameters. For the 4UN, 6UN, and 8UN series, the pitch diameter tolerances specified for Classes 2A, 2B, 3A and 3B are based on a length of engagement equal to the basic major (nominal) diameter and are applicable for lengths of engagement up to 1-1/2 diameters.

For special applications the required length of engagement may be the determining factor in determining the proper thread tolerances.

The pitch diameter tolerances specified in Table 2 for all classes of the UNEF, 12UN, 16UN, 20UN, 28UN, and 32UN series are based on a length of engagement of 9 times the pitch and are applicable for lengths of engagement from 5 to 15 times the pitch.

The pitch diameter tolerances specified in Table 3 for all classes of the UNS series are based on a length of engagement of 9 times the pitch and are applicable for lengths of engagement from 5 to 15 times the pitch. They are taken from Tables 28 through 37.

Whenever a thread in a constant pitch series also appears in the UNC, UNF, or UNEF series the symbols and tolerances for limits of size of those standard series are applicable.

Where the length of engagement exceeds that for which the tolerances are applicable, tolerances and allowances should be obtained from the tabulated tolerances and increments for special threads, if applicable, or computed from the formulas. (See Appendix G.)

INTERNAL THREAD MINOR DIAMETER TOLERANCE BASIS. Internal thread minor diameter tolerances specified in the dimensional tables are based on the use of materials of equal tensile strength for external and internal threads and a length of engagement equal to the basic major (nominal) diameter. For general applications these tolerances are suitable for lengths of engagement up to 1-1/2 diameters. They are based on formulas given in Appendixes E and G.

However, some thread applications have lengths of engagement which are greater than 1-1/2 diameters or less than the nominal diameter. For applications having shorter or longer lengths of engagement it may be advantageous to decrease or increase the tolerance respectively as explained in Appendix H.

UNIFIED SCREW THREADS

SECTION 6—SCREW THREAD DESIGNATION

The method of designating a screw thread is by specifying in sequence the nominal size, number of threads per inch, thread series symbol, and thread class symbol. Pitch diameter limits are required for all but standard tabulated series threads.

Examples:

Nominal size (fractional diameter or screw number)
Number of threads per inch
Thread series symbol (see dimensional tables)
Thread class symbol (see Section 3)

1/4 - 20 UNC - 2A

1/4 - 20 UNC - 3A

In thread notes for plated threads which do not have an allowance, or for certain applications of Class 2A where it is desirable to maintain the allowance, the pitch diameter limits should be followed by the words "AFTER PLATING", thereby indicating that the thread before plating must have special provisions which will accommodate the plating thickness without exceeding the limit dimensions specified on the drawing.

Examples:

1/4 - 28 UNF - 3A
PD .2268 - .2243 AFTER PLATING

1/4 - 28 UNF - 3B
PD .2268 - .2300 AFTER PLATING

1/2 - 13 UNC - 2A
PD .4485 - .4435 AFTER PLATING

1/2 - 13 UNC - 2B
PD .4500 - .4565 AFTER PLATING

In instances where it is necessary to specify special pitch diameter before plating, plated pitch diameter limits should be followed by the words "AFTER PLATING" and the minimum pitch diameter should be specified followed by the words "BEFORE PLATING."

Examples:

1/4 - 20 UNC - 3A
PD 0.2175 - 0.2147 AFTER PLATING
MIN. PD 0.2137 BEFORE PLATING

1/4 - 20 UNC - 2A
PD 0.2175 - 0.2127 AFTER PLATING
MIN PD 0.2117 BEFORE PLATING

Unless otherwise specified, threads are right hand; a left hand thread must be designated LH as follows:

1/4 - 20 UNC - 2A - LH

APPLICATION OF STANDARD DESIGNATIONS. The standard series designations listed in Table 2, Column 2, are applicable to the corresponding standard thread sizes when limits of size conform to those listed in Table 2 or when thread crests are modified in accordance with paragraph on modified threads below. The designation "UNS" listed in Table 3, Column 2, is applicable to the corresponding thread sizes when limits of size conform to those listed in Table 3. The designation "UNS" also applies to all threads for which limits of size are computed from step tables (Tables 28 to 37, inclusive) or increment tables (Table 16) or from the Unified formulation for all elements (Appendixes F, G, and H.)

For all "UNS" threads, specification of the thread class, the major diameter limits for external threads or the minor diameter limits for internal threads, the pitch diameter limits, and the length of engagement are required. See Modified Threads.

Examples:

1/4 - 24 UNS - 3A (Required)
PD .2229 - .2198 (Required)
LG OF ENGMT .88 (Required)

.495 - 20 UNS - 3A (Required)
PD .4625 - .4593 (Required)
LG OF ENGMT .50 (Required)

Where a standard series thread, such as UNF, becomes a special, UNS, by virtue of an increased length of engagement, the specification of this length of engagement is a requirement for guidance on the selection of the proper GO thread gage length.

Example:

1/2 - 20 UNS - 2A
PD .4662 - .4615
LG OF ENGMT 1.00

MODIFIED THREADS. It is occasionally necessary to modify the limits of size of the major diameter of an external thread or the minor diameter of an internal thread from the limits established for standard series and special threads in order to fit a specific purpose but without change in class of thread or pitch diameter limits. (It should be noted that standard series thread gages are used for these threads.) Such threads should be specified with the established thread designation

UNIFIED SCREW THREADS

followed by a statement of the modified diameter limits and the designation "MOD."

Examples:

External thread:

3/8 - 24 UNF - 3A MOD
MAJOR DIA .3720 - .3648 MOD

2 - 14 UNS - 2A MOD
MAJOR DIA 1.995 - 1.985 MOD
PD 1.9519 - 1.9462
LG OF ENGMT 1.00

Internal thread:

1-1/2 - 10 UNS - 3B MOD
MINOR DIA 1.398 - 1.408 MOD
PD 1.4350 - 1.4412
LG OF ENGMT 1.50

Internal threads are designated as "modified" when tolerances in Tables 36 and 37 are applied other than those corresponding to 2/3D to 1-1/2 D length of engagement.

Examples:

1/4 - 20 UNS - 2B MOD
MINOR DIA .204 - .210 MOD
PD .2175 - .2227
LG OF ENGMT .75

3/8 - 24 UNF - 2B MOD
MINOR DIA .330 - .335 MOD
PD .3479 - .3528

THREADS OTHERWISE ALTERED. If a standard series or special thread is altered in any respect other than major or minor diameter, as above stated, it is designated in accordance with the following.

Examples:

Special external thread:

7/16 - 24 UNIFIED FORM - SPL
MAJOR DIA .4340 - .4280 SPL
PD .4104 - .4060 SPL
LG OF ENGMT .38

Special form external thread:

7/8 - 18 SPECIAL FORM
THREAD ANGLE 60 DEG
MAJOR DIA .8750 - .8668
PD .8384 - .8343
MAX MINOR DIA .8060 (AS GAGED)
LG OF ENGMT .69

"Special form" in the latter example arises from the fact that the detail of the root differs from that for the standard thread form.

Special form threads will not include the letter "U" in the designation.

UNIFIED AND AMERICAN SCREW THREADS

TABLE 2 LIMITING DIMENSIONS OF STANDARD SERIES THREADS

Nominal Size and Threads Per Inch	Series Designation	EXTERNAL[c]								INTERNAL[c]					
		Class	Allowance	Major Diameter			Pitch Diameter		Minor Dia.[a]	Class	Minor Diameter		Pitch Diameter		Major Dia.
				Max.[b]	Min.	Min.[d]	Max.[b]	Min.			Min.	Max.	Min.	Max.	Min.
0 - 80	NF	2A	0.0005	0.0595	0.0563	—	0.0514	0.0496	0.0442	2B	0.0465	0.0514	0.0519	0.0542	0.0600
		3A	0.0000	0.0600	0.0568	—	0.0519	0.0506	0.0447	3B	0.0465	0.0514	0.0519	0.0536	0.0600
		2	0.0000	0.0600	0.0566	—	0.0519	0.0502	0.0447	2	0.0465	0.0514	0.0519	0.0536	0.0600
		3	0.0000	0.0600	0.0566	—	0.0519	0.0506	0.0447	3	0.0465	0.0514	0.0519	0.0532	0.0600
1 - 64	NC	2A	0.0006	0.0724	0.0686	—	0.0623	0.0603	0.0532	2B	0.0561	0.0623	0.0629	0.0655	0.0730
		3A	0.0000	0.0730	0.0692	—	0.0629	0.0614	0.0538	3B	0.0561	0.0623	0.0629	0.0648	0.0730
		2	0.0000	0.0730	0.0692	0.0678	0.0629	0.0610	0.0538	2	0.0561	0.0623	0.0629	0.0648	0.0730
		3	0.0000	0.0730	0.0692	—	0.0629	0.0615	0.0538	3	0.0561	0.0623	0.0629	0.0643	0.0730
1 - 72	NF	2A	0.0006	0.0724	0.0689	—	0.0634	0.0615	0.0554	2B	0.0580	0.0635	0.0640	0.0665	0.0730
		3A	0.0000	0.0730	0.0695	—	0.0640	0.0626	0.0560	3B	0.0580	0.0635	0.0640	0.0659	0.0730
		2	0.0000	0.0730	0.0694	—	0.0640	0.0622	0.0560	2	0.0580	0.0634	0.0640	0.0658	0.0730
		3	0.0000	0.0730	0.0694	—	0.0640	0.0627	0.0560	3	0.0580	0.0634	0.0640	0.0653	0.0730
2 - 56	NC	2A	0.0006	0.0854	0.0813	—	0.0738	0.0717	0.0635	2B	0.0667	0.0737	0.0744	0.0772	0.0860
		3A	0.0000	0.0860	0.0819	—	0.0744	0.0728	0.0641	3B	0.0667	0.0737	0.0744	0.0765	0.0860
		2	0.0000	0.0860	0.0820	0.0804	0.0744	0.0724	0.0641	2	0.0667	0.0737	0.0744	0.0764	0.0860
		3	0.0000	0.0860	0.0820	—	0.0744	0.0729	0.0641	3	0.0667	0.0737	0.0744	0.0759	0.0860
2 - 64	NF	2A	0.0006	0.0854	0.0816	—	0.0753	0.0733	0.0662	2B	0.0691	0.0753	0.0759	0.0786	0.0860
		3A	0.0000	0.0860	0.0822	—	0.0759	0.0744	0.0668	3B	0.0691	0.0753	0.0759	0.0779	0.0860
		2	0.0000	0.0860	0.0822	—	0.0759	0.0740	0.0668	2	0.0691	0.0746	0.0759	0.0778	0.0860
		3	0.0000	0.0860	0.0822	—	0.0759	0.0745	0.0668	3	0.0691	0.0746	0.0759	0.0773	0.0860
3 - 48	NC	2A	0.0007	0.0983	0.0938	—	0.0848	0.0825	0.0727	2B	0.0764	0.0845	0.0855	0.0885	0.0990
		3A	0.0000	0.0990	0.0945	—	0.0855	0.0838	0.0734	3B	0.0764	0.0845	0.0855	0.0877	0.0990
		2	0.0000	0.0990	0.0946	0.0928	0.0855	0.0833	0.0734	2	0.0764	0.0841	0.0855	0.0877	0.0990
		3	0.0000	0.0990	0.0946	—	0.0855	0.0839	0.0734	3	0.0764	0.0841	0.0855	0.0871	0.0990
3 - 56	NF	2A	0.0007	0.0983	0.0942	—	0.0867	0.0845	0.0764	2B	0.0797	0.0865	0.0874	0.0902	0.0990
		3A	0.0000	0.0990	0.0949	—	0.0874	0.0858	0.0771	3B	0.0797	0.0865	0.0874	0.0895	0.0990
		2	0.0000	0.0990	0.0950	—	0.0874	0.0854	0.0771	2	0.0797	0.0856	0.0874	0.0894	0.0990
		3	0.0000	0.0990	0.0950	—	0.0874	0.0859	0.0771	3	0.0797	0.0856	0.0874	0.0889	0.0990
4 - 40	NC[e]	2A	0.0008	0.1112	0.1061	—	0.0950	0.0925	0.0805	2B	0.0849	0.0939	0.0958	0.0991	0.1120
		3A	0.0000	0.1120	0.1069	—	0.0958	0.0939	0.0813	3B	0.0849	0.0939	0.0958	0.0982	0.1120
		2	0.0000	0.1120	0.1072	0.1052	0.0958	0.0934	0.0813	2	0.0849	0.0938	0.0958	0.0982	0.1120
		3	0.0000	0.1120	0.1072	—	0.0958	0.0941	0.0813	3	0.0849	0.0938	0.0958	0.0975	0.1120
4 - 48	NF	2A	0.0007	0.1113	0.1068	—	0.0978	0.0954	0.0857	2B	0.0894	0.0968	0.0985	0.1016	0.1120
		3A	0.0000	0.1120	0.1075	—	0.0985	0.0967	0.0864	3B	0.0894	0.0968	0.0985	0.1008	0.1120
		2	0.0000	0.1120	0.1076	—	0.0985	0.0963	0.0864	2	0.0894	0.0960	0.0985	0.1007	0.1120
		3	0.0000	0.1120	0.1076	—	0.0985	0.0969	0.0864	3	0.0894	0.0960	0.0985	0.1001	0.1120
5 - 40	NC	2A	0.0008	0.1242	0.1191	—	0.1080	0.1054	0.0935	2B	0.0979	0.1062	0.1088	0.1121	0.1250
		3A	0.0000	0.1250	0.1199	—	0.1088	0.1069	0.0943	3B	0.0979	0.1062	0.1088	0.1113	0.1250
		2	0.0000	0.1250	0.1202	0.1182	0.1088	0.1064	0.0943	2	0.0979	0.1062	0.1088	0.1112	0.1250
		3	0.0000	0.1250	0.1202	—	0.1088	0.1071	0.0943	3	0.0979	0.1062	0.1088	0.1105	0.1250

a See Figure 1.
b For Class 2A, the maximum is increased by the amount of the allowance if the threads have an additive finish such as plating or coating.
c The juxtaposition of external and internal thread classes in this table does not indicate that they must be used in combination. See Section 4.
d For unfinished hot-rolled material.
e The following five sizes have been standardized as between American, Canadian, and British industry for purposes of attachment, that is, an instrument or accessory to a panel: 4-40, 6-32, 8-32, 10-24, and 10-32, with 10-32 preferred over 10-24.

UNIFIED AND AMERICAN SCREW THREADS

TABLE 2 (CONTINUED) LIMITING DIMENSIONS OF STANDARD SERIES THREADS

Nominal Size and Threads Per Inch	Series Designation	EXTERNAL[c]								INTERNAL[c]					
		Class	Allowance	Major Diameter			Pitch Diameter		Minor Dia.[a]	Class	Minor Diameter		Pitch Diameter		Major Dia.
				Max.[b]	Min.	Min.[d]	Max.[b]	Min.			Min.	Max.	Min.	Max.	Min.
5 - 44	NF	2A	0.0007	0.1243	0.1195	—	0.1095	0.1070	0.0964	2B	0.1004	0.1079	0.1102	0.1134	0.1250
		3A	0.0000	0.1250	0.1202	—	0.1102	0.1083	0.0971	3B	0.1004	0.1079	0.1102	0.1126	0.1250
		2	0.0000	0.1250	0.1204	—	0.1102	0.1079	0.0971	2	0.1004	0.1068	0.1102	0.1125	0.1250
		3	0.0000	0.1250	0.1204	—	0.1102	0.1086	0.0971	3	0.1004	0.1068	0.1102	0.1118	0.1250
6 - 32	NC[e]	2A	0.0008	0.1372	0.1312	—	0.1169	0.1141	0.0989	2B	0.104	0.114	0.1177	0.1214	0.1380
		3A	0.0000	0.1380	0.1320	—	0.1177	0.1156	0.0997	3B	0.1040	0.1140	0.1177	0.1204	0.1380
		2	0.0000	0.1380	0.1326	0.1304	0.1177	0.1150	0.0997	2	0.1042	0.1145	0.1177	0.1204	0.1380
		3	0.0000	0.1380	0.1326	—	0.1177	0.1158	0.0997	3	0.1042	0.1145	0.1177	0.1196	0.1380
6 - 40	NF	2A	0.0008	0.1372	0.1321	—	0.1210	0.1184	0.1065	2B	0.111	0.119	0.1218	0.1252	0.1380
		3A	0.0000	0.1380	0.1329	—	0.1218	0.1198	0.1073	3B	0.1110	0.1196	0.1218	0.1243	0.1380
		2	0.0000	0.1380	0.1332	—	0.1218	0.1194	0.1073	2	0.1109	0.1179	0.1218	0.1242	0.1380
		3	0.0000	0.1380	0.1332	—	0.1218	0.1201	0.1073	3	0.1109	0.1179	0.1218	0.1235	0.1380
8 - 32	NC[e]	2A	0.0009	0.1631	0.1571	—	0.1428	0.1399	0.1248	2B	0.130	0.139	0.1437	0.1475	0.1640
		3A	0.0000	0.1640	0.1580	—	0.1437	0.1415	0.1257	3B	0.1300	0.1389	0.1437	0.1465	0.1640
		2	0.0000	0.1640	0.1586	0.1564	0.1437	0.1410	0.1257	2	0.1302	0.1384	0.1437	0.1464	0.1640
		3	0.0000	0.1640	0.1586	—	0.1437	0.1418	0.1257	3	0.1302	0.1384	0.1437	0.1456	0.1640
8 - 36	NF	2A	0.0008	0.1632	0.1577	—	0.1452	0.1424	0.1291	2B	0.134	0.142	0.1460	0.1496	0.1640
		3A	0.0000	0.1640	0.1585	—	0.1460	0.1439	0.1299	3B	0.1340	0.1416	0.1460	0.1487	0.1640
		2	0.0000	0.1640	0.1590	—	0.1460	0.1435	0.1299	2	0.1339	0.1402	0.1460	0.1485	0.1640
		3	0.0000	0.1640	0.1590	—	0.1460	0.1442	0.1299	3	0.1339	0.1402	0.1460	0.1478	0.1640
10 - 24	NC[e]	2A	0.0010	0.1890	0.1818	—	0.1619	0.1586	0.1379	2B	0.145	0.156	0.1629	0.1672	0.1900
		3A	0.0000	0.1900	0.1828	—	0.1629	0.1604	0.1389	3B	0.1450	0.1555	0.1629	0.1661	0.1900
		2	0.0000	0.1900	0.1834	0.1808	0.1629	0.1596	0.1389	2	0.1449	0.1559	0.1629	0.1662	0.1900
		3	0.0000	0.1900	0.1834	—	0.1629	0.1605	0.1389	3	0.1449	0.1559	0.1629	0.1653	0.1900
10 - 32	NF[e]	2A	0.0009	0.1891	0.1831	—	0.1688	0.1658	0.1508	2B	0.156	0.164	0.1697	0.1736	0.1900
		3A	0.0000	0.1900	0.1840	—	0.1697	0.1674	0.1517	3B	0.1560	0.1641	0.1697	0.1726	0.1900
		2	0.0000	0.1900	0.1846	—	0.1697	0.1670	0.1517	2	0.1562	0.1624	0.1697	0.1724	0.1900
		3	0.0000	0.1900	0.1846	—	0.1697	0.1678	0.1517	3	0.1562	0.1624	0.1697	0.1716	0.1900
12 - 24	NC	2A	0.0010	0.2150	0.2078	—	0.1879	0.1845	0.1639	2B	0.171	0.181	0.1889	0.1933	0.2160
		3A	0.0000	0.2160	0.2088	—	0.1889	0.1863	0.1649	3B	0.1710	0.1807	0.1889	0.1922	0.2160
		2	0.0000	0.2160	0.2094	0.2068	0.1889	0.1856	0.1649	2	0.1709	0.1801	0.1889	0.1922	0.2160
		3	0.0000	0.2160	0.2094	—	0.1889	0.1865	0.1649	3	0.1709	0.1801	0.1889	0.1913	0.2160
12 - 28	NF	2A	0.0010	0.2150	0.2085	—	0.1918	0.1886	0.1712	2B	0.177	0.186	0.1928	0.1970	0.2160
		3A	0.0000	0.2160	0.2095	—	0.1928	0.1904	0.1722	3B	0.1770	0.1857	0.1928	0.1959	0.2160
		2	0.0000	0.2160	0.2098	—	0.1928	0.1897	0.1722	2	0.1773	0.1835	0.1928	0.1959	0.2160
		3	0.0000	0.2160	0.2098	—	0.1928	0.1906	0.1722	3	0.1773	0.1835	0.1928	0.1950	0.2160
12 - 32	NEF	2A	0.0009	0.2151	0.2091	—	0.1948	0.1917	0.1768	2B	0.182	0.190	0.1957	0.1998	0.2160
		3A	0.0000	0.2160	0.2100	—	0.1957	0.1933	0.1777	3B	0.1820	0.1895	0.1957	0.1988	0.2160
		2	0.0000	0.2160	0.2106	—	0.1957	0.1926	0.1777	2	0.1822	0.1875	0.1957	0.1988	0.2160
		3	0.0000	0.2160	0.2106	—	0.1957	0.1935	0.1777	3	0.1822	0.1875	0.1957	0.1979	0.2160

a See Figure 1.
b For Class 2A, the maximum is increased by the amount of the allowance if the threads have an additive finish such as plating or coating.
c The juxtaposition of external and internal thread classes in this table does not indicate that they must be used in combination. See Section 4.
d For unfinished hot-rolled material.
e The following five sizes have been standardized as between American, Canadian, and British industry for purposes of attachment, that is, an instrument or accessory to a panel: 4-40, 6-32, 8-32, 10-24, and 10-32, with 10-32 preferred over 10-24.

UNIFIED AND AMERICAN SCREW THREADS

TABLE 2 (CONTINUED) LIMITING DIMENSIONS OF STANDARD SERIES THREADS

Nominal Size and Threads Per Inch	Series Designation	EXTERNAL[c]								INTERNAL[c]					
		Class	Allowance	Major Diameter			Pitch Diameter		Minor Dia.[a]	Class	Minor Diameter[e]		Pitch Diameter		Major Dia.
				Max.[b]	Min.	Min.[d]	Max.[b]	Min.			Min.	Max.	Min.	Max.	Min.
1/4 - 20	UNC	1A	0.0011	0.2489	0.2367	—	0.2164	0.2108	0.1876	1B	0.196	0.207	0.2175	0.2248	0.2500
		2A	0.0011	0.2489	0.2408	0.2367	0.2164	0.2127	0.1876	2B	0.196	0.207	0.2175	0.2223	0.2500
		3A	0.0000	0.2500	0.2419	—	0.2175	0.2147	0.1887	3B	0.1960	0.2067	0.2175	0.2211	0.2500
	NC	2	0.0000	0.2500	0.2428	0.2398	0.2175	0.2139	0.1887	2	0.1959	0.2060	0.2175	0.2211	0.2500
		3	0.0000	0.2500	0.2428	—	0.2175	0.2149	0.1887	3	0.1959	0.2060	0.2175	0.2201	0.2500
1/4 - 28	UNF	1A	0.0010	0.2490	0.2392	—	0.2258	0.2208	0.2052	1B	0.211	0.220	0.2268	0.2333	0.2500
		2A	0.0010	0.2490	0.2425	—	0.2258	0.2225	0.2052	2B	0.211	0.220	0.2268	0.2311	0.2500
		3A	0.0000	0.2500	0.2435	—	0.2268	0.2243	0.2062	3B	0.2110	0.2190	0.2268	0.2300	0.2500
	NF	2	0.0000	0.2500	0.2438	—	0.2268	0.2237	0.2062	2	0.2113	0.2173	0.2268	0.2299	0.2500
		3	0.0000	0.2500	0.2438	—	0.2268	0.2246	0.2062	3	0.2113	0.2173	0.2268	0.2290	0.2500
1/4 - 32	NEF	2A	0.0010	0.2490	0.2430	—	0.2287	0.2255	0.2107	2B	0.216	0.224	0.2297	0.2339	0.2500
		3A	0.0000	0.2500	0.2440	—	0.2297	0.2273	0.2117	3B	0.2160	0.2229	0.2297	0.2328	0.2500
		2	0.0000	0.2500	0.2446	—	0.2297	0.2265	0.2117	2	0.2162	0.2210	0.2297	0.2329	0.2500
		3	0.0000	0.2500	0.2446	—	0.2297	0.2275	0.2117	3	0.2162	0.2210	0.2297	0.2319	0.2500
5/16 - 18	UNC	1A	0.0012	0.3113	0.2982	—	0.2752	0.2691	0.2431	1B	0.252	0.265	0.2764	0.2843	0.3125
		2A	0.0012	0.3113	0.3026	0.2982	0.2752	0.2712	0.2431	2B	0.252	0.265	0.2764	0.2817	0.3125
		3A	0.0000	0.3125	0.3038	—	0.2764	0.2734	0.2443	3B	0.2520	0.2630	0.2764	0.2803	0.3125
	NC	2	0.0000	0.3125	0.3043	0.3011	0.2764	0.2723	0.2443	2	0.2524	0.2630	0.2764	0.2805	0.3125
		3	0.0000	0.3125	0.3043	—	0.2764	0.2734	0.2443	3	0.2524	0.2630	0.2764	0.2794	0.3125
5/16 - 24	UNF	1A	0.0011	0.3114	0.3006	—	0.2843	0.2788	0.2603	1B	0.267	0.277	0.2854	0.2925	0.3125
		2A	0.0011	0.3114	0.3042	—	0.2843	0.2806	0.2603	2B	0.267	0.277	0.2854	0.2902	0.3125
		3A	0.0000	0.3125	0.3053	—	0.2854	0.2827	0.2614	3B	0.2670	0.2754	0.2854	0.2890	0.3125
	NF	2	0.0000	0.3125	0.3059	—	0.2854	0.2821	0.2614	2	0.2674	0.2739	0.2854	0.2887	0.3125
		3	0.0000	0.3125	0.3059	—	0.2854	0.2830	0.2614	3	0.2674	0.2739	0.2854	0.2878	0.3125
5/16 - 32	NEF	2A	0.0010	0.3115	0.3055	—	0.2912	0.2880	0.2732	2B	0.279	0.286	0.2922	0.2964	0.3125
		3A	0.0000	0.3125	0.3065	—	0.2922	0.2898	0.2742	3B	0.2790	0.2847	0.2922	0.2953	0.3125
		2	0.0000	0.3125	0.3071	—	0.2922	0.2889	0.2742	2	0.2787	0.2835	0.2922	0.2955	0.3125
		3	0.0000	0.3125	0.3071	—	0.2922	0.2899	0.2742	3	0.2787	0.2835	0.2922	0.2945	0.3125
3/8 - 16	UNC	1A	0.0013	0.3737	0.3595	—	0.3331	0.3266	0.2970	1B	0.307	0.321	0.3344	0.3429	0.3750
		2A	0.0013	0.3737	0.3643	0.3595	0.3331	0.3287	0.2970	2B	0.307	0.321	0.3344	0.3401	0.3750
		3A	0.0000	0.3750	0.3656	—	0.3344	0.3311	0.2983	3B	0.3070	0.3182	0.3344	0.3387	0.3750
	NC	2	0.0000	0.3750	0.3660	0.3624	0.3344	0.3299	0.2983	2	0.3073	0.3184	0.3344	0.3389	0.3750
		3	0.0000	0.3750	0.3660	—	0.3344	0.3312	0.2983	3	0.3073	0.3184	0.3344	0.3376	0.3750
3/8 - 24	UNF	1A	0.0011	0.3739	0.3631	—	0.3468	0.3411	0.3228	1B	0.330	0.340	0.3479	0.3553	0.3750
		2A	0.0011	0.3739	0.3667	—	0.3468	0.3430	0.3228	2B	0.330	0.340	0.3479	0.3528	0.3750
		3A	0.0000	0.3750	0.3678	—	0.3479	0.3450	0.3239	3B	0.3300	0.3372	0.3479	0.3516	0.3750
	NF	2	0.0000	0.3750	0.3684	—	0.3479	0.3446	0.3239	2	0.3299	0.3364	0.3479	0.3512	0.3750
		3	0.0000	0.3750	0.3684	—	0.3479	0.3455	0.3239	3	0.3299	0.3364	0.3479	0.3503	0.3750

a See Figure 1.
b For Class 2A, the maximum is increased by the amount of the allowance if the threads have an additive finish such as plating or coating.
c The juxtaposition of external and internal thread classes in this table does not indicate that they must be used in combination. See Section 4.
d For unfinished hot-rolled material.
e Revised minor diameter limits of Classes 1B and 2B are in process of ratification as Unified standard.

UNIFIED AND AMERICAN SCREW THREADS

TABLE 2 (CONTINUED) LIMITING DIMENSIONS OF STANDARD SERIES THREADS

Nominal Size and Threads Per Inch	Series Designation	EXTERNAL[c]								INTERNAL[c]					
		Class	Allowance	Major Diameter			Pitch Diameter		Minor Dia.[a]	Class	Minor Diameter[e]		Pitch Diameter		Major Dia.
				Max.[b]	Min.	Min.[d]	Max.[b]	Min.			Min.	Max.	Min.	Max.	Min.
3/8 - 32	NEF	2A	0.0010	0.3740	0.3680	—	0.3537	0.3503	0.3357	2B	0.341	0.349	0.3547	0.3591	0.3750
		3A	0.0000	0.3750	0.3690	—	0.3547	0.3522	0.3367	3B	0.3410	0.3469	0.3547	0.3580	0.3750
		2	0.0000	0.3750	0.3696	—	0.3547	0.3513	0.3367	2	0.3412	0.3460	0.3547	0.3581	0.3750
		3	0.0000	0.3750	0.3696	—	0.3547	0.3523	0.3367	3	0.3412	0.3460	0.3547	0.3571	0.3750
7/16 - 14	UNC	1A	0.0014	0.4361	0.4206	—	0.3897	0.3826	0.3485	1B	0.360	0.376	0.3911	0.4003	0.4375
		2A	0.0014	0.4361	0.4258	0.4206	0.3897	0.3850	0.3485	2B	0.360	0.376	0.3911	0.3972	0.4375
		3A	0.0000	0.4375	0.4272	—	0.3911	0.3876	0.3499	3B	0.3600	0.3717	0.3911	0.3957	0.4375
	NC	2	0.0000	0.4375	0.4277	0.4235	0.3911	0.3862	0.3499	2	0.3602	0.3721	0.3911	0.3960	0.4375
		3	0.0000	0.4375	0.4277	—	0.3911	0.3875	0.3499	3	0.3602	0.3721	0.3911	0.3947	0.4375
7/16 - 20	UNF	1A	0.0013	0.4362	0.4240	—	0.4037	0.3975	0.3749	1B	0.383	0.395	0.4050	0.4131	0.4375
		2A	0.0013	0.4362	0.4281	—	0.4037	0.3995	0.3749	2B	0.383	0.395	0.4050	0.4104	0.4375
		3A	0.0000	0.4375	0.4294	—	0.4050	0.4019	0.3762	3B	0.3830	0.3916	0.4050	0.4091	0.4375
	NF	2	0.0000	0.4375	0.4303	—	0.4050	0.4014	0.3762	2	0.3834	0.3906	0.4050	0.4086	0.4375
		3	0.0000	0.4375	0.4303	—	0.4050	0.4024	0.3762	3	0.3834	0.3906	0.4050	0.4076	0.4375
7/16 - 28	UNEF	2A	0.0011	0.4364	0.4299	—	0.4132	0.4096	0.3926	2B	0.399	0.407	0.4143	0.4189	0.4375
		3A	0.0000	0.4375	0.4310	—	0.4143	0.4116	0.3937	3B	0.3990	0.4051	0.4143	0.4178	0.4375
	NEF	2	0.0000	0.4375	0.4313	—	0.4143	0.4107	0.3937	2	0.3988	0.4044	0.4143	0.4179	0.4375
		3	0.0000	0.4375	0.4313	—	0.4143	0.4118	0.3937	3	0.3988	0.4044	0.4143	0.4168	0.4375
1/2 - 12	N	2A	0.0016	0.4984	0.4870	—	0.4443	0.4389	0.3962	2B	0.410	0.428	0.4459	0.4529	0.5000
		3A	0.0000	0.5000	0.4886	—	0.4459	0.4419	0.3978	3B	0.4100	0.4223	0.4459	0.4511	0.5000
		2	0.0000	0.5000	0.4888	—	0.4459	0.4403	0.3978	2	0.4098	0.4225	0.4459	0.4515	0.5000
		3	0.0000	0.5000	0.4888	—	0.4459	0.4419	0.3978	3	0.4098	0.4225	0.4459	0.4499	0.5000
1/2 - 13	UNC	1A	0.0015	0.4985	0.4822	—	0.4485	0.4411	0.4041	1B	0.417	0.434	0.4500	0.4597	0.5000
		2A	0.0015	0.4985	0.4876	0.4822	0.4485	0.4435	0.4041	2B	0.417	0.434	0.4500	0.4565	0.5000
		3A	0.0000	0.5000	0.4891	---	0.4500	0.4463	0.4056	3B	0.4170	0.4284	0.4500	0.4548	0.5000
	NC	2	0.0000	0.5000	0.4896	0.4852	0.4500	0.4448	0.4056	2	0.4167	0.4290	0.4500	0.4552	0.5000
		3	0.0000	0.5000	0.4896	—	0.4500	0.4463	0.4056	3	0.4167	0.4290	0.4500	0.4537	0.5000
1/2 - 20	UNF	1A	0.0013	0.4987	0.4865	—	0.4662	0.4598	0.4374	1B	0.446	0.457	0.4675	0.4759	0.5000
		2A	0.0013	0.4987	0.4906	—	0.4662	0.4619	0.4374	2B	0.446	0.457	0.4675	0.4731	0.5000
		3A	0.0000	0.5000	0.4919	—	0.4675	0.4643	0.4387	3B	0.4460	0.4537	0.4675	0.4717	0.5000
	NF	2	0.0000	0.5000	0.4928	—	0.4675	0.4639	0.4387	2	0.4459	0.4531	0.4675	0.4711	0.5000
		3	0.0000	0.5000	0.4928	—	0.4675	0.4649	0.4387	3	0.4459	0.4531	0.4675	0.4701	0.5000
1/2 - 28	UNEF	2A	0.0011	0.4989	0.4924	—	0.4757	0.4720	0.4551	2B	0.461	0.470	0.4768	0.4816	0.5000
		3A	0.0000	0.5000	0.4935	—	0.4768	0.4740	0.4562	3B	0.4610	0.4676	0.4768	0.4804	0.5000
	NEF	2	0.0000	0.5000	0.4938	—	0.4768	0.4731	0.4562	2	0.4613	0.4669	0.4768	0.4805	0.5000
		3	0.0000	0.5000	0.4938	—	0.4768	0.4742	0.4562	3	0.4613	0.4669	0.4768	0.4794	0.5000

a See Figure 1.
b For Class 2A, the maximum is increased by the amount of the allowance if the threads have an additive finish such as plating or coating.
c The juxtaposition of external and internal thread classes in this table does not indicate that they must be used in combination. See Section 4.
d For unfinished hot-rolled material.
e Revised minor diameter limits of Classes 1B and 2B are in process of ratification as Unified standard.

UNIFIED AND AMERICAN SCREW THREADS

TABLE 2 (CONTINUED) LIMITING DIMENSIONS OF STANDARD SERIES THREADS

Nominal Size and Threads Per Inch	Series Designation	EXTERNAL[c]								INTERNAL[c]					
		Class	Allowance	Major Diameter			Pitch Diameter		Minor Dia.[a]	Class	Minor Diameter[e]		Pitch Diameter		Major Dia.
				Max.[b]	Min.	Min.[d]	Max.[b]	Min.			Min.	Max.	Min.	Max.	Min.
9/16 - 12	UNC	1A	0.0016	0.5609	0.5437	—	0.5068	0.4990	0.4587	1B	0.472	0.490	0.5084	0.5186	0.5625
		2A	0.0016	0.5609	0.5495	0.5437	0.5068	0.5016	0.4587	2B	0.472	0.490	0.5084	0.5152	0.5625
		3A	0.0000	0.5625	0.5511	—	0.5084	0.5045	0.4603	3B	0.4720	0.4843	0.5084	0.5135	0.5625
	NC	2	0.0000	0.5625	0.5513	0.5467	0.5084	0.5028	0.4603	2	0.4723	0.4850	0.5084	0.5140	0.5625
		3	0.0000	0.5625	0.5513	—	0.5084	0.5044	0.4603	3	0.4723	0.4850	0.5084	0.5124	0.5625
9/16 - 18	UNF	1A	0.0014	0.5611	0.5480	—	0.5250	0.5182	0.4929	1B	0.502	0.515	0.5264	0.5353	0.5625
		2A	0.0014	0.5611	0.5524	—	0.5250	0.5205	0.4929	2B	0.502	0.515	0.5264	0.5323	0.5625
		3A	0.0000	0.5625	0.5538	—	0.5264	0.5230	0.4943	3B	0.5020	0.5106	0.5264	0.5308	0.5625
	NF	2	0.0000	0.5625	0.5543	—	0.5264	0.5223	0.4943	2	0.5024	0.5100	0.5264	0.5305	0.5625
		3	0.0000	0.5625	0.5543	—	0.5264	0.5234	0.4943	3	0.5024	0.5100	0.5264	0.5294	0.5625
9/16 - 24	NEF	2A	0.0012	0.5613	0.5541	—	0.5342	0.5303	0.5102	2B	0.517	0.527	0.5354	0.5405	0.5625
		3A	0.0000	0.5625	0.5553	—	0.5354	0.5325	0.5114	3B	0.5170	0.5244	0.5354	0.5392	0.5625
		2	0.0000	0.5625	0.5559	—	0.5354	0.5314	0.5114	2	0.5174	0.5239	0.5354	0.5394	0.5625
		3	0.0000	0.5625	0.5559	—	0.5354	0.5326	0.5114	3	0.5174	0.5239	0.5354	0.5382	0.5625
5/8 - 11	UNC	1A	0.0016	0.6234	0.6052	—	0.5644	0.5561	0.5119	1B	0.527	0.546	0.5660	0.5767	0.6250
		2A	0.0016	0.6234	0.6113	0.6052	0.5644	0.5589	0.5119	2B	0.527	0.546	0.5660	0.5732	0.6250
		3A	0.0000	0.6250	0.6129	—	0.5660	0.5619	0.5135	3B	0.5270	0.5391	0.5660	0.5714	0.6250
	NC	2	0.0000	0.6250	0.6132	0.6080	0.5660	0.5601	0.5135	2	0.5266	0.5397	0.5660	0.5719	0.6250
		3	0.0000	0.6250	0.6132	—	0.5660	0.5618	0.5135	3	0.5266	0.5397	0.5660	0.5702	0.6250
5/8 - 12	N	2A	0.0016	0.6234	0.6120	—	0.5693	0.5639	0.5212	2B	0.535	0.553	0.5709	0.5780	0.6250
		3A	0.0000	0.6250	0.6136	—	0.5709	0.5668	0.5228	3B	0.5350	0.5463	0.5709	0.5762	0.6250
		2	0.0000	0.6250	0.6138	—	0.5709	0.5653	0.5228	2	0.5348	0.5438	0.5709	0.5765	0.6250
		3	0.0000	0.6250	0.6138	—	0.5709	0.5669	0.5228	3	0.5348	0.5438	0.5709	0.5749	0.6250
5/8 - 18	UNF	1A	0.0014	0.6236	0.6105	—	0.5875	0.5805	0.5554	1B	0.565	0.578	0.5889	0.5980	0.6250
		2A	0.0014	0.6236	0.6149	—	0.5875	0.5828	0.5554	2B	0.565	0.578	0.5889	0.5949	0.6250
		3A	0.0000	0.6250	0.6163	—	0.5889	0.5854	0.5568	3B	0.5650	0.5730	0.5889	0.5934	0.6250
	NF	2	0.0000	0.6250	0.6168	—	0.5889	0.5848	0.5568	2	0.5649	0.5725	0.5889	0.5930	0.6250
		3	0.0000	0.6250	0.6168	—	0.5889	0.5859	0.5568	3	0.5649	0.5725	0.5889	0.5919	0.6250
5/8 - 24	NEF	2A	0.0012	0.6238	0.6166	—	0.5967	0.5927	0.5727	2B	0.580	0.590	0.5979	0.6031	0.6250
		3A	0.0000	0.6250	0.6178	—	0.5979	0.5949	0.5739	3B	0.5800	0.5869	0.5979	0.6018	0.6250
		2	0.0000	0.6250	0.6184	—	0.5979	0.5938	0.5739	2	0.5799	0.5864	0.5979	0.6020	0.6250
		3	0.0000	0.6250	0.6184	—	0.5979	0.5950	0.5739	3	0.5799	0.5864	0.5979	0.6008	0.6250
11/16 - 12	N	2A	0.0016	0.6859	0.6745	—	0.6318	0.6264	0.5837	2B	0.597	0.615	0.6334	0.6405	0.6875
		3A	0.0000	0.6875	0.6761	—	0.6334	0.6293	0.5853	3B	0.5970	0.6085	0.6334	0.6387	0.6875
		2	0.0000	0.6875	0.6763	—	0.6334	0.6278	0.5853	2	0.5973	0.6063	0.6334	0.6390	0.6875
		3	0.0000	0.6875	0.6763	—	0.6334	0.6294	0.5853	3	0.5973	0.6063	0.6334	0.6374	0.6875
11/16 - 24	NEF	2A	0.0012	0.6863	0.6791	—	0.6592	0.6552	0.6352	2B	0.642	0.652	0.6604	0.6656	0.6875
		3A	0.0000	0.6875	0.6803	—	0.6604	0.6574	0.6364	3B	0.6420	0.6494	0.6604	0.6643	0.6875
		2	0.0000	0.6875	0.6809	—	0.6604	0.6563	0.6364	2	0.6424	0.6489	0.6604	0.6645	0.6875
		3	0.0000	0.6875	0.6809	—	0.6604	0.6575	0.6364	3	0.6424	0.6489	0.6604	0.6633	0.6875

a See Figure 1.
b For Class 2A, the maximum is increased by the amount of the allowance if the threads have an additive finish such as plating or coating.
c The juxtaposition of external and internal thread classes in this table does not indicate that they must be used in combination. See Section 4.
d For unfinished hot-rolled material.
e Revised minor diameter limits of Classes 1B and 2B are in process of ratification as Unified standard.

UNIFIED AND AMERICAN SCREW THREADS

TABLE 2 (CONTINUED) LIMITING DIMENSIONS OF STANDARD SERIES THREADS

Nominal Size and Threads Per Inch	Series Designation	EXTERNAL[c]								INTERNAL[c]					
		Class	Allowance	Major Diameter			Pitch Diameter		Minor Dia.[a]	Class	Minor Diameter[e]		Pitch Diameter		Major Dia.
				Max.[b]	Min.	Min.[d]	Max.[b]	Min.			Min.	Max.	Min.	Max.	Min.
3/4 - 10	UNC	1A	0.0018	0.7482	0.7288	—	0.6832	0.6744	0.6255	1B	0.642	0.663	0.6850	0.6965	0.7500
		2A	0.0018	0.7482	0.7353	0.7288	0.6832	0.6773	0.6255	2B	0.642	0.663	0.6850	0.6927	0.7500
		3A	0.0000	0.7500	0.7371	—	0.6850	0.6806	0.6273	3B	0.6420	0.6545	0.6850	0.6907	0.7500
	NC	2	0.0000	0.7500	0.7372	0.7316	0.6850	0.6786	0.6273	2	0.6417	0.6553	0.6850	0.6914	0.7500
		3	0.0000	0.7500	0.7372	—	0.6850	0.6805	0.6273	3	0.6417	0.6553	0.6850	0.6895	0.7500
3/4 - 12	N	2A	0.0017	0.7483	0.7369	—	0.6942	0.6887	0.6461	2B	0.660	0.678	0.6959	0.7031	0.7500
		3A	0.0000	0.7500	0.7386	—	0.6959	0.6918	0.6478	3B	0.6600	0.6707	0.6959	0.7013	0.7500
		2	0.0000	0.7500	0.7388	—	0.6959	0.6903	0.6478	2	0.6598	0.6688	0.6959	0.7015	0.7500
		3	0.0000	0.7500	0.7388	—	0.6959	0.6919	0.6478	3	0.6598	0.6688	0.6959	0.6999	0.7500
3/4 - 16	UNF	1A	0.0015	0.7485	0.7343	—	0.7079	0.7004	0.6718	1B	0.682	0.696	0.7094	0.7192	0.7500
		2A	0.0015	0.7485	0.7391	—	0.7079	0.7029	0.6718	2B	0.682	0.696	0.7094	0.7159	0.7500
		3A	0.0000	0.7500	0.7406	—	0.7094	0.7056	0.6733	3B	0.6820	0.6908	0.7094	0.7143	0.7500
	NF	2	0.0000	0.7500	0.7410	—	0.7094	0.7049	0.6733	2	0.6823	0.6903	0.7094	0.7139	0.7500
		3	0.0000	0.7500	0.7410	—	0.7094	0.7062	0.6733	3	0.6823	0.6903	0.7094	0.7126	0.7500
3/4 - 20	UNEF	2A	0.0013	0.7487	0.7406	—	0.7162	0.7118	0.6874	2B	0.696	0.707	0.7175	0.7232	0.7500
		3A	0.0000	0.7500	0.7419	—	0.7175	0.7142	0.6887	3B	0.6960	0.7037	0.7175	0.7218	0.7500
	NEF	2	0.0000	0.7500	0.7428	—	0.7175	0.7129	0.6887	2	0.6959	0.7031	0.7175	0.7221	0.7500
		3	0.0000	0.7500	0.7428	—	0.7175	0.7143	0.6887	3	0.6959	0.7031	0.7175	0.7207	0.7500
13/16 - 12	N	2A	0.0017	0.8108	0.7994	—	0.7567	0.7512	0.7086	2B	0.722	0.740	0.7584	0.7656	0.8125
		3A	0.0000	0.8125	0.8011	—	0.7584	0.7543	0.7103	3B	0.7220	0.7329	0.7584	0.7638	0.8125
		2	0.0000	0.8125	0.8013	—	0.7584	0.7528	0.7103	2	0.7223	0.7313	0.7584	0.7640	0.8125
		3	0.0000	0.8125	0.8013	—	0.7584	0.7544	0.7103	3	0.7223	0.7313	0.7584	0.7624	0.8125
13/16 - 16	UN	2A	0.0015	0.8110	0.8016	—	0.7704	0.7655	0.7343	2B	0.745	0.759	0.7719	0.7782	0.8125
		3A	0.0000	0.8125	0.8031	—	0.7719	0.7683	0.7358	3B	0.7450	0.7533	0.7719	0.7766	0.8125
	N	2	0.0000	0.8125	0.8035	—	0.7719	0.7668	0.7358	2	0.7448	0.7528	0.7719	0.7770	0.8125
		3	0.0000	0.8125	0.8035	—	0.7719	0.7684	0.7358	3	0.7448	0.7528	0.7719	0.7754	0.8125
13/16 - 20	UNEF	2A	0.0013	0.8112	0.8031	—	0.7787	0.7743	0.7498	2B	0.758	0.770	0.7800	0.7857	0.8125
		3A	0.0000	0.8125	0.8044	—	0.7800	0.7767	0.7512	3B	0.7580	0.7662	0.7800	0.7843	0.8125
	NEF	2	0.0000	0.8125	0.8053	—	0.7800	0.7754	0.7512	2	0.7584	0.7656	0.7800	0.7846	0.8125
		3	0.0000	0.8125	0.8053	—	0.7800	0.7768	0.7512	3	0.7584	0.7656	0.7800	0.7832	0.8125
7/8 - 9	UNC	1A	0.0019	0.8731	0.8523	—	0.8009	0.7914	0.7368	1B	0.755	0.778	0.8028	0.8151	0.8750
		2A	0.0019	0.8731	0.8592	0.8523	0.8009	0.7946	0.7368	2B	0.755	0.778	0.8028	0.8110	0.8750
		3A	0.0000	0.8750	0.8611	—	0.8028	0.7981	0.7387	3B	0.7550	0.7681	0.8028	0.8089	0.8750
	NC	2	0.0000	0.8750	0.8610	0.8550	0.8028	0.7958	0.7387	2	0.7547	0.7689	0.8028	0.8098	0.8750
		3	0.0000	0.8750	0.8610	—	0.8028	0.7979	0.7387	3	0.7547	0.7689	0.8028	0.8077	0.8750
7/8 - 12	N	2A	0.0017	0.8733	0.8619	—	0.8192	0.8137	0.7711	2B	0.785	0.803	0.8209	0.8281	0.8750
		3A	0.0000	0.8750	0.8636	—	0.8209	0.8168	0.7728	3B	0.7850	0.7952	0.8209	0.8263	0.8750

a See Figure 1.
b For Class 2A, the maximum is increased by the amount of the allowance if the threads have an additive finish such as plating or coating.
c The juxtaposition of external and internal thread classes in this table does not indicate that they must be used in combination. See Section 4.
d For unfinished hot-rolled material.
e Revised minor diameter limits of Classes 1B and 2B are in process of ratification as Unified standard.

UNIFIED AND AMERICAN SCREW THREADS

TABLE 3 (CONTINUED) LIMITING DIMENSIONS FOR SELECTED COMBINATIONS OF SPECIAL SERIES THREADS

Nominal Size and Threads Per Inch	Designation	EXTERNAL[c]							INTERNAL[c]					
		Class	Allowance	Major Diameter		Pitch Diameter		Minor Dia.[a]	Class	Minor Diameter[d]		Pitch Diameter		Major Dia.
				Max.[b]	Min.	Max.[b]	Min.			Min.	Max.	Min.	Max.	Min.
7/16 - 16	NS	2A	0.0014	0.4361	0.4267	0.3955	0.3909	0.3594	2B	0.370	0.384	0.3969	0.4028	0.4375
		2	0.0000	0.4375	0.4285	0.3969	0.3924	0.3608	2	0.3698	0.3795	0.3969	0.4014	0.4375
		3	0.0000	0.4375	0.4285	0.3969	0.3938	0.3608	3	0.3698	0.3795	0.3969	0.4000	0.4375
7/16 - 18	NS	2A	0.0013	0.4362	0.4275	0.4001	0.3958	0.3680	2B	0.377	0.390	0.4014	0.4070	0.4375
		2	0.0000	0.4375	0.4293	0.4014	0.3972	0.3693	2	0.3774	0.3852	0.4014	0.4056	0.4375
		3	0.0000	0.4375	0.4293	0.4014	0.3984	0.3693	3	0.3774	0.3852	0.4014	0.4044	0.4375
7/16 - 24	NS	2A	0.0011	0.4364	0.4292	0.4093	0.4055	0.3853	2B	0.392	0.402	0.4104	0.4153	0.4375
		2	0.0000	0.4375	0.4309	0.4104	0.4066	0.3864	2	0.3924	0.3988	0.4104	0.4142	0.4375
		3	0.0000	0.4375	0.4309	0.4104	0.4078	0.3864	3	0.3924	0.3988	0.4104	0.4130	0.4375
7/16 - 27	NS	2A	0.0011	0.4364	0.4297	0.4123	0.4087	0.3910	2B	0.397	0.406	0.4134	0.4181	0.4375
7/16 - 32	NS	2A	0.0010	0.4365	0.4305	0.4162	0.4128	0.3982	2B	0.404	0.411	0.4172	0.4216	0.4375
		2	0.0000	0.4375	0.4321	0.4172	0.4138	0.3992	2	0.4037	0.4085	0.4172	0.4206	0.4375
		3	0.0000	0.4375	0.4321	0.4172	0.4148	0.3992	3	0.4037	0.4085	0.4172	0.4196	0.4375
1/2 - 14	NS	2A	0.0015	0.4985	0.4882	0.4521	0.4471	0.4109	2B	0.423	0.438	0.4536	0.4601	0.5000
		2	0.0000	0.5000	0.4902	0.4536	0.4487	0.4124	2	0.4227	0.4336	0.4536	0.4585	0.5000
		3	0.0000	0.5000	0.4902	0.4536	0.4501	0.4124	3	0.4227	0.4336	0.4536	0.4571	0.5000
1/2 - 16	NS	2A	0.0014	0.4986	0.4892	0.4580	0.4533	0.4219	2B	0.432	0.446	0.4594	0.4655	0.5000
		2	0.0000	0.5000	0.4910	0.4594	0.4547	0.4233	2	0.4323	0.4407	0.4594	0.4641	0.5000
		3	0.0000	0.5000	0.4910	0.4594	0.4561	0.4233	3	0.4323	0.4407	0.4594	0.4627	0.5000
1/2 - 18	NS	2A	0.0013	0.4987	0.4900	0.4626	0.4582	0.4305	2B	0.440	0.453	0.4639	0.4697	0.5000
		2	0.0000	0.5000	0.4918	0.4639	0.4595	0.4318	2	0.4399	0.4475	0.4639	0.4683	0.5000
		3	0.0000	0.5000	0.4918	0.4639	0.4608	0.4318	3	0.4399	0.4475	0.4639	0.4670	0.5000
1/2 - 24	NS	2A	0.0012	0.4988	0.4916	0.4717	0.4678	0.4477	2B	0.455	0.465	0.4729	0.4780	0.5000
		2	0.0000	0.5000	0.4934	0.4729	0.4689	0.4489	2	0.4549	0.4613	0.4729	0.4769	0.5000
		3	0.0000	0.5000	0.4934	0.4729	0.4701	0.4489	3	0.4549	0.4613	0.4729	0.4757	0.5000
1/2 - 27	NS	2A	0.0011	0.4989	0.4922	0.4748	0.4711	0.4535	2B	0.460	0.469	0.4759	0.4807	0.5000
1/2 - 32	NS	2A	0.0010	0.4990	0.4930	0.4787	0.4752	0.4607	2B	0.466	0.474	0.4797	0.4842	0.5000
		2	0.0000	0.5000	0.4946	0.4797	0.4761	0.4617	2	0.4662	0.4710	0.4797	0.4833	0.5000
		3	0.0000	0.5000	0.4946	0.4797	0.4772	0.4617	3	0.4662	0.4710	0.4797	0.4822	0.5000
9/16 - 14	NS	2A	0.0015	0.5610	0.5507	0.5146	0.5096	0.4734	2B	0.485	0.501	0.5161	0.5226	0.5625
		2	0.0000	0.5625	0.5527	0.5161	0.5112	0.4749	2	0.4852	0.4949	0.5161	0.5210	0.5625
		3	0.0000	0.5625	0.5527	0.5161	0.5126	0.4749	3	0.4852	0.4949	0.5161	0.5196	0.5625
9/16 - 16	NS	2A	0.0014	0.5611	0.5517	0.5205	0.5158	0.4844	2B	0.495	0.509	0.5219	0.5280	0.5625
		2	0.0000	0.5625	0.5535	0.5219	0.5172	0.4858	2	0.4948	0.5029	0.5219	0.5266	0.5625
		3	0.0000	0.5625	0.5535	0.5219	0.5186	0.4858	3	0.4948	0.5029	0.5219	0.5252	0.5625
9/16 - 20	NS	2A	0.0013	0.5612	0.5531	0.5287	0.5245	0.4999	2B	0.508	0.520	0.5300	0.5355	0.5625
		2	0.0000	0.5625	0.5553	0.5300	0.5258	0.5012	2	0.5084	0.5156	0.5300	0.5342	0.5625
		3	0.0000	0.5625	0.5553	0.5300	0.5270	0.5012	3	0.5084	0.5156	0.5300	0.5330	0.5625

a See Figure 1.
b For Class 2A, the maximum is increased by the amount of the allowance if the threads have an additive finish such as plating or coating.
c The juxtaposition of external and internal thread classes in this table does not indicate that they must be used in combination. See Section 4.
d Revised minor diameter limits of Classes 1B and 2B are in process of ratification as Unified standard.

UNIFIED AND AMERICAN SCREW THREADS

TABLE 3 (CONTINUED) LIMITING DIMENSIONS FOR SELECTED COMBINATIONS OF SPECIAL SERIES THREADS

Nominal Size and Threads Per Inch	Designation	EXTERNAL[c]							INTERNAL[c]					
		Class	Allowance	Major Diameter		Pitch Diameter		Minor Dia.[a]	Class	Minor Diameter[d]		Pitch Diameter		Major Dia.
				Max.[b]	Min.	Max.[b]	Min.			Min.	Max.	Min.	Max.	Min.
9/16 - 27	NS	2A	0.0011	0.5614	0.5547	0.5373	0.5336	0.5160	2B	0.522	0.531	0.5384	0.5432	0.5625
9/16 - 28	UNS	2A	0.0011	0.5614	0.5549	0.5382	0.5345	0.5176	2B	0.524	0.532	0.5393	0.5441	0.5625
	NS	2	0.0000	0.5625	0.5563	0.5393	0.5356	0.5187	2	0.5238	0.5294	0.5393	0.5430	0.5625
		3	0.0000	0.5625	0.5563	0.5393	0.5367	0.5187	3	0.5238	0.5294	0.5393	0.5419	0.5625
9/16 - 32	NS	2A	0.0010	0.5615	0.5555	0.5412	0.5377	0.5232	2B	0.529	0.536	0.5422	0.5467	0.5625
		2	0.0000	0.5625	0.5571	0.5422	0.5386	0.5242	2	0.5287	0.5335	0.5422	0.5458	0.5625
		3	0.0000	0.5625	0.5571	0.5422	0.5397	0.5242	3	0.5287	0.5335	0.5422	0.5447	0.5625
5/8 - 14	NS	2A	0.0015	0.6235	0.6132	0.5771	0.5720	0.5359	2B	0.548	0.563	0.5786	0.5852	0.6250
		2	0.0000	0.6250	0.6152	0.5786	0.5735	0.5374	2	0.5477	0.5562	0.5786	0.5837	0.6250
		3	0.0000	0.6250	0.6152	0.5786	0.5750	0.5374	3	0.5477	0.5562	0.5786	0.5822	0.6250
5/8 - 16	NS	2A	0.0014	0.6236	0.6142	0.5830	0.5782	0.5469	2B	0.557	0.571	0.5844	0.5906	0.6250
		2	0.0000	0.6250	0.6160	0.5844	0.5796	0.5483	2	0.5573	0.5654	0.5844	0.5892	0.6250
		3	0.0000	0.6250	0.6160	0.5844	0.5810	0.5483	3	0.5573	0.5654	0.5844	0.5878	0.6250
5/8 - 20	NS	2A	0.0013	0.6237	0.6156	0.5912	0.5869	0.5624	2B	0.571	0.582	0.5925	0.5981	0.6250
		2	0.0000	0.6250	0.6178	0.5925	0.5881	0.5637	2	0.5709	0.5781	0.5925	0.5969	0.6250
		3	0.0000	0.6250	0.6178	0.5925	0.5894	0.5637	3	0.5709	0.5781	0.5925	0.5956	0.6250
5/8 - 27	NS	2A	0.0011	0.6239	0.6172	0.5998	0.5960	0.5785	2B	0.585	0.594	0.6009	0.6059	0.6250
5/8 - 28	UNS	2A	0.0011	0.6239	0.6174	0.6007	0.5969	0.5801	2B	0.586	0.595	0.6018	0.6067	0.6250
	NS	2	0.0000	0.6250	0.6188	0.6018	0.5979	0.5812	2	0.5863	0.5919	0.6018	0.6057	0.6250
		3	0.0000	0.6250	0.6188	0.6018	0.5991	0.5812	3	0.5863	0.5919	0.6018	0.6045	0.6250
5/8 - 32	NS	2A	0.0011	0.6239	0.6179	0.6036	0.6000	0.5856	2B	0.591	0.599	0.6047	0.6093	0.6250
		2	0.0000	0.6250	0.6196	0.6047	0.6010	0.5867	2	0.5912	0.5960	0.6047	0.6084	0.6250
		3	0.0000	0.6250	0.6196	0.6047	0.6021	0.5867	3	0.5912	0.5960	0.6047	0.6073	0.6250
11/16 - 16	UNS	2A	0.0014	0.6861	0.6767	0.6455	0.6407	0.6094	2B	0.6198	0.6339	0.6469	0.6531	0.6875
11/16 - 18	NS	2A	0.0014	0.6861	0.6774	0.6500	0.6455	0.6179	2B	0.6274	0.6401	0.6514	0.6573	0.6875
11/16 - 20	UNS	2A	0.0013	0.6862	0.6781	0.6537	0.6494	0.6249	2B	0.6334	0.6449	0.6550	0.6606	0.6875
3/4 - 14	NS	2A	0.0015	0.7485	0.7382	0.7021	0.6970	0.6609	2B	0.673	0.688	0.7036	0.7103	0.7500
		2	0.0000	0.7500	0.7402	0.7036	0.6983	0.6624	2	0.6727	0.6812	0.7036	0.7089	0.7500
		3	0.0000	0.7500	0.7402	0.7036	0.6999	0.6624	3	0.6727	0.6812	0.7036	0.7073	0.7500
3/4 - 18	NS	2A	0.0014	0.7486	0.7399	0.7125	0.7079	0.6804	2B	0.690	0.703	0.7139	0.7199	0.7500
		2	0.0000	0.7500	0.7418	0.7139	0.7091	0.6818	2	0.6899	0.6975	0.7139	0.7187	0.7500
		3	0.0000	0.7500	0.7418	0.7139	0.7106	0.6818	3	0.6899	0.6975	0.7139	0.7172	0.7500
3/4 - 24	NS	2A	0.0012	0.7488	0.7416	0.7217	0.7176	0.6977	2B	0.705	0.715	0.7229	0.7282	0.7500
		2	0.0000	0.7500	0.7434	0.7229	0.7186	0.6989	2	0.7049	0.7113	0.7229	0.7272	0.7500
		3	0.0000	0.7500	0.7434	0.7229	0.7199	0.6989	3	0.7049	0.7113	0.7259	0.7259	0.7500

a See Figure 1.
b For Class 2A, the maximum is increased by the amount of the allowance if the threads have an additive finish such as plating or coating.
c The juxtaposition of external and internal thread classes in this table does not indicate that they must be used in combination. See Section 4.
d Revised minor diameter limits of Classes 1B and 2B are in process of ratification as Unified standard.

UNIFIED AND AMERICAN SCREW THREADS

TABLE 3 (CONTINUED) LIMITING DIMENSIONS FOR SELECTED COMBINATIONS OF SPECIAL SERIES THREADS

Nominal Size and Threads Per Inch	Designation	EXTERNAL[c]							INTERNAL[c]					
		Class	Allowance	Major Diameter		Pitch Diameter		Minor Dia.[a]	Class	Minor Diameter[d]		Pitch Diameter		Major Dia.
				Max.[b]	Min.	Max.[b]	Min.			Min.	Max.	Min.	Max.	Min.
3/4 - 27	NS	2A	0.0012	0.7488	0.7421	0.7247	0.7208	0.7034	2B	0.710	0.719	0.7259	0.7310	0.7500
3/4 - 28	UNS	2A	0.0012	0.7488	0.7423	0.7256	0.7218	0.7050	2B	0.711	0.720	0.7268	0.7318	0.7500
	NS	2	0.0000	0.7500	0.7438	0.7268	0.7228	0.7062	2	0.7113	0.7169	0.7268	0.7308	0.7500
		3	0.0000	0.7500	0.7438	0.7268	0.7240	0.7062	3	0.7113	0.7169	0.7268	0.7296	0.7500
3/4 - 32	NS	2A	0.0011	0.7489	0.7429	0.7286	0.7250	0.7106	2B	0.716	0.724	0.7297	0.7344	0.7500
		2	0.0000	0.7500	0.7446	0.7297	0.7258	0.7117	2	0.7162	0.7210	0.7297	0.7336	0.7500
		3	0.0000	0.7500	0.7446	0.7297	0.7270	0.7117	3	0.7162	0.7210	0.7297	0.7324	0.7500
13/16 - 18	NS	2A	0.0014	0.8111	0.8024	0.7750	0.7704	0.7429	2B	0.7524	0.7651	0.7764	0.7824	0.8125
7/8 - 10	NS	2A	0.0018	0.8732	0.8603	0.8082	0.8022	0.7505	2B	0.767	0.788	0.8100	0.8178	0.8750
		2	0.0000	0.8750	0.8622	0.8100	0.8039	0.7523	2	0.7667	0.7776	0.8100	0.8161	0.8750
		3	0.0000	0.8750	0.8622	0.8100	0.8057	0.7523	3	0.7667	0.7776	0.8100	0.8143	0.8750
7/8 - 18	NS	2A	0.0014	0.8736	0.8649	0.8375	0.8329	0.8054	2B	0.815	0.828	0.8389	0.8449	0.8750
		2	0.0000	0.8750	0.8668	0.8389	0.8341	0.8068	2	0.8149	0.8225	0.8389	0.8437	0.8750
		3	0.0000	0.8750	0.8668	0.8389	0.8356	0.8068	3	0.8149	0.8225	0.8389	0.8422	0.8750
7/8 - 24	NS	2A	0.0012	0.8738	0.8666	0.8467	0.8426	0.8227	2B	0.830	0.840	0.8479	0.8532	0.8750
		2	0.0000	0.8750	0.8684	0.8479	0.8436	0.8239	2	0.8299	0.8363	0.8479	0.8522	0.8750
		3	0.0000	0.8750	0.8684	0.8479	0.8449	0.8239	3	0.8299	0.8363	0.8479	0.8509	0.8750
7/8 - 27	NS	2A	0.0012	0.8738	0.8671	0.8497	0.8458	0.8284	2B	0.835	0.844	0.8509	0.8560	0.8750
7/8 - 28	UNS	2A	0.0012	0.8738	0.8673	0.8506	0.8468	0.8300	2B	0.836	0.845	0.8518	0.8568	0.8750
	NS	2	0.0000	0.8750	0.8688	0.8518	0.8478	0.8312	2	0.8363	0.8419	0.8518	0.8558	0.8750
		3	0.0000	0.8750	0.8688	0.8518	0.8490	0.8312	3	0.8363	0.8419	0.8518	0.8546	0.8750
7/8 - 32	NS	2A	0.0011	0.8739	0.8679	0.8536	0.8500	0.8356	2B	0.841	0.849	0.8547	0.8594	0.8750
		2	0.0000	0.8750	0.8696	0.8547	0.8508	0.8367	2	0.8412	0.8460	0.8547	0.8586	0.8750
		3	0.0000	0.8750	0.8696	0.8547	0.8520	0.8367	3	0.8412	0.8460	0.8547	0.8574	0.8750
1 - 10	NS	2A	0.0018	0.9982	0.9853	0.9332	0.9270	0.8755	2B	0.892	0.913	0.9350	0.9430	1.0000
		2	0.0000	1.0000	0.9872	0.9350	0.9286	0.8773	2	0.8917	0.9025	0.9350	0.9414	1.0000
		3	0.0000	1.0000	0.9872	0.9350	0.9305	0.8773	3	0.8917	0.9025	0.9350	0.9395	1.0000
1 - 14	NS[e]	1A	0.0017	0.9983	0.9828	0.9519	0.9435	0.9107	1B	0.923	0.938	0.9536	0.9645	1.0000
		2A	0.0017	0.9983	0.9880	0.9519	0.9463	0.9107	2B	0.923	0.938	0.9536	0.9609	1.0000
		3A	0.0000	1.0000	0.9897	0.9536	0.9494	0.9124	3B	0.9230	0.9315	0.9536	0.9590	1.0000
1 - 18	NS	2A	0.0014	0.9986	0.9899	0.9625	0.9578	0.9304	2B	0.940	0.953	0.9639	0.9701	1.0000
		2	0.0000	1.0000	0.9918	0.9639	0.9589	0.9318	2	0.9399	0.9475	0.9639	0.9689	1.0000
		3	0.0000	1.0000	0.9918	0.9639	0.9604	0.9318	3	0.9399	0.9475	0.9639	0.9674	1.0000
1 - 24	NS	2A	0.0013	0.9987	0.9915	0.9716	0.9674	0.9476	2B	0.955	0.965	0.9729	0.9784	1.0000
		2	0.0000	1.0000	0.9934	0.9729	0.9684	0.9489	2	0.9549	0.9613	0.9729	0.9774	1.0000
		3	0.0000	1.0000	0.9934	0.9729	0.9697	0.9489	3	0.9549	0.9613	0.9729	0.9761	1.0000

a See Figure 1.
b For Class 2A, the maximum is increased by the amount of the allowance if the threads have an additive finish such as plating or coating.
c The juxtaposition of external and internal thread classes in this table does not indicate that they must be used in combination. See Section 4.
d Revised minor diameter limits of Classes 1B and 2B are in process of ratification as Unified standard.
e Was NF. Tolerances and allowances are based on one diameter length of engagement.

UNIFIED AND AMERICAN SCREW THREADS

TABLE 3 (CONTINUED) LIMITING DIMENSIONS FOR SELECTED COMBINATIONS OF SPECIAL SERIES THREADS

Nominal Size and Threads Per Inch	Designation	EXTERNAL[c]							INTERNAL[c]					
		Class	Allowance	Major Diameter		Pitch Diameter		Minor Dia.[a]	Class	Minor Diameter[d]		Pitch Diameter		Major Dia.
				Max.[b]	Min.	Max.[b]	Min.			Min.	Max.	Min.	Max.	Min.
1 - 27	NS	2A	0.0012	0.9988	0.9921	0.9747	0.9707	0.9534	2B	0.960	0.969	0.9759	0.9811	1.0000
1 - 28	UNS	2A	0.0012	0.9988	0.9923	0.9756	0.9716	0.9550	2B	0.961	0.970	0.9768	0.9820	1.0000
	NS	2	0.0000	1.0000	0.9938	0.9768	0.9725	0.9562	2	0.9613	0.9669	0.9768	0.9811	1.0000
		3	0.0000	1.0000	0.9938	0.9768	0.9738	0.9562	3	0.9613	0.9669	0.9768	0.9798	1.0000
1 - 32	NS	2A	0.0011	0.9989	0.9929	0.9786	0.9748	0.9606	2B	0.966	0.974	0.9797	0.9846	1.0000
		2	0.0000	1.0000	0.9946	0.9797	0.9756	0.9617	2	0.9662	0.9710	0.9797	0.9838	1.0000
		3	0.0000	1.0000	0.9946	0.9797	0.9768	0.9617	3	0.9662	0.9710	0.9797	0.9826	1.0000
1-1/16 - 14	NS	2A	0.0016	1.0609	1.0506	1.0145	1.0092	0.9733	2B	0.9852	1.0010	1.0161	1.0230	1.0625
1-1/8 - 8	NS	2	0.0000	1.1250	1.1098	1.0438	1.0368	0.9716	2	0.9897	1.0032	1.0438	1.0508	1.1250
		3	0.0000	1.1250	1.1098	1.0438	1.0389	0.9716	3	0.9897	1.0032	1.0438	1.0487	1.1250
1-1/8 - 10	NS	2A	0.0018	1.1232	1.1103	1.0582	1.0520	1.0005	2B	1.017	1.038	1.0600	1.0680	1.1250
		2	0.0000	1.1250	1.1122	1.0600	1.0536	1.0023	2	1.0167	1.0275	1.0600	1.0664	1.1250
		3	0.0000	1.1250	1.1122	1.0600	1.0555	1.0023	3	1.0167	1.0275	1.0600	1.0645	1.1250
1-1/8 - 14	NS	2A	0.0016	1.1234	1.1131	1.0770	1.0717	1.0358	2B	1.048	1.064	1.0786	1.0855	1.1250
		2	0.0000	1.1250	1.1152	1.0786	1.0731	1.0374	2	1.0477	1.0562	1.0786	1.0841	1.1250
		3	0.0000	1.1250	1.1152	1.0786	1.0747	1.0374	3	1.0477	1.0562	1.0786	1.0825	1.1250
1-1/8 - 20	UNS	2A	0.0014	1.1236	1.1155	1.0911	1.0866	1.0623	2B	1.071	1.082	1.0925	1.0984	1.1250
	NS	2	0.0000	1.1250	1.1178	1.0925	1.0877	1.0637	2	1.0709	1.0781	1.0925	1.0973	1.1250
		3	0.0000	1.1250	1.1178	1.0925	1.0891	1.0637	3	1.0709	1.0781	1.0925	1.0959	1.1250
1-1/8 - 24	NS	2A	0.0013	1.1237	1.1165	1.0966	1.0924	1.0726	2B	1.080	1.090	1.0979	1.1034	1.1250
		2	0.0000	1.1250	1.1184	1.0979	1.0934	1.0739	2	1.0799	1.0863	1.0979	1.1024	1.1250
		3	0.0000	1.1250	1.1184	1.0979	1.0947	1.0739	3	1.0799	1.0863	1.0979	1.1011	1.1250
1-1/8 - 28	UNS	2A	0.0012	1.1238	1.1173	1.1006	1.0966	1.0800	2B	1.086	1.095	1.1018	1.1070	1.1250
	NS	2	0.0000	1.1250	1.1188	1.1018	1.0975	1.0812	2	1.0863	1.0919	1.1018	1.1061	1.1250
		3	0.0000	1.1250	1.1188	1.1018	1.0988	1.0812	3	1.0863	1.0919	1.1018	1.1048	1.1250
1-1/4 - 8	NS	2	0.0000	1.2500	1.2348	1.1688	1.1615	1.0966	2	1.1147	1.1282	1.1688	1.1761	1.2500
		3	0.0000	1.2500	1.2348	1.1688	1.1637	1.0966	3	1.1147	1.1282	1.1688	1.1739	1.2500
1-1/4 - 10	NS	2A	0.0019	1.2481	1.2352	1.1831	1.1768	1.1254	2B	1.142	1.163	1.1850	1.1932	1.2500
		2	0.0000	1.2500	1.2372	1.1850	1.1784	1.1273	2	1.1417	1.1525	1.1850	1.1916	1.2500
		3	0.0000	1.2500	1.2372	1.1850	1.1804	1.1273	3	1.1417	1.1525	1.1850	1.1896	1.2500
1-1/4 - 14	NS	2A	0.0016	1.2484	1.2381	1.2020	1.1966	1.1608	2B	1.173	1.188	1.2036	1.2106	1.2500
		2	0.0000	1.2500	1.2402	1.2036	1.1978	1.1624	2	1.1727	1.1812	1.2036	1.2094	1.2500
		3	0.0000	1.2500	1.2402	1.2036	1.1996	1.1624	3	1.1727	1.1812	1.2036	1.2076	1.2500
1-1/4 - 20	UNS	2A	0.0014	1.2486	1.2405	1.2161	1.2114	1.1873	2B	1.196	1.207	1.2175	1.2236	1.2500

a See Figure 1.
b For Class 2A, the maximum is increased by the amount of the allowance if the threads have an additive finish such as plating or coating.
c The juxtaposition of external and internal thread classes in this table does not indicate that they must be used in combination. See Section 4.
d Revised minor diameter limits of Classes 1B and 2B are in process of ratification as Unified standard.

UNIFIED AND AMERICAN SCREW THREADS

TABLE 2 (CONTINUED) LIMITING DIMENSIONS OF STANDARD SERIES THREADS

Nominal Size and Threads Per Inch	Series Designation	EXTERNAL[c]								INTERNAL[c]					
		Class	Allowance	Major Diameter			Pitch Diameter		Minor Dia.[a]	Class	Minor Diameter[e]		Pitch Diameter		Major Dia.
				Max.[b]	Min.	Min.[d]	Max.[b]	Min.			Min.	Max.	Min.	Max.	Min.
7/8 - 12	N	2	0.0000	0.8750	0.8638	—	0.8209	0.8153	0.7728	2	0.7848	0.7938	0.8209	0.8265	0.8750
		3	0.0000	0.8750	0.8638	—	0.8209	0.8169	0.7728	3	0.7848	0.7938	0.8209	0.8249	0.8750
7/8 - 14	UNF	1A	0.0016	0.8734	0.8579	—	0.8270	0.8189	0.7858	1B	0.798	0.814	0.8286	0.8392	0.8750
		2A	0.0016	0.8734	0.8631	—	0.8270	0.8216	0.7858	2B	0.798	0.814	0.8286	0.8356	0.8750
		3A	0.0000	0.8750	0.8647	—	0.8286	0.8245	0.7874	3B	0.7980	0.8068	0.8286	0.8339	0.8750
	NF	2	0.0000	0.8750	0.8652	—	0.8286	0.8237	0.7874	2	0.7977	0.8062	0.8286	0.8335	0.8750
		3	0.0000	0.8750	0.8652	—	0.8286	0.8250	0.7874	3	0.7977	0.8062	0.8286	0.8322	0.8750
7/8 - 16	UN	2A	0.0015	0.8735	0.8641	—	0.8329	0.8280	0.7968	2B	0.807	0.821	0.8344	0.8407	0.8750
		3A	0.0000	0.8750	0.8656	—	0.8344	0.8308	0.7983	3B	0.8070	0.8158	0.8344	0.8391	0.8750
	N	2	0.0000	0.8750	0.8660	—	0.8344	0.8293	0.7983	2	0.8073	0.8153	0.8344	0.8395	0.8750
		3	0.0000	0.8750	0.8660	—	0.8344	0.8308	0.7983	3	0.8073	0.8153	0.8344	0.8380	0.8750
7/8 - 20	UNEF	2A	0.0013	0.8737	0.8656	—	0.8412	0.8368	0.8124	2B	0.821	0.832	0.8425	0.8482	0.8750
		3A	0.0000	0.8750	0.8669	—	0.8425	0.8392	0.8137	3B	0.8210	0.8287	0.8425	0.8468	0.8750
	NEF	2	0.0000	0.8750	0.8678	—	0.8425	0.8378	0.8137	2	0.8209	0.8281	0.8425	0.8472	0.8750
		3	0.0000	0.8750	0.8678	—	0.8425	0.8392	0.8137	3	0.8209	0.8281	0.8425	0.8458	0.8750
15/16 - 12	UN	2A	0.0017	0.9358	0.9244	—	0.8817	0.8760	0.8336	2B	0.847	0.865	0.8834	0.8908	0.9375
		3A	0.0000	0.9375	0.9261	—	0.8834	0.8793	0.8353	3B	0.8470	0.8575	0.8834	0.8889	0.9375
	N	2	0.0000	0.9375	0.9263	—	0.8834	0.8778	0.8353	2	0.8473	0.8563	0.8834	0.8890	0.9375
		3	0.0000	0.9375	0.9263	—	0.8834	0.8794	0.8353	3	0.8473	0.8563	0.8834	0.8874	0.9375
15/16 - 16	UN	2A	0.0015	0.9360	0.9266	—	0.8954	0.8904	0.8593	2B	0.870	0.884	0.8969	0.9034	0.9375
		3A	0.0000	0.9375	0.9281	—	0.8969	0.8932	0.8608	3B	0.8700	0.8783	0.8969	0.9018	0.9375
	N	2	0.0000	0.9375	0.9285	—	0.8969	0.8917	0.8608	2	0.8698	0.8778	0.8969	0.9021	0.9375
		3	0.0000	0.9375	0.9285	—	0.8969	0.8933	0.8608	3	0.8698	0.8778	0.8969	0.9005	0.9375
15/16 - 20	UNEF	2A	0.0014	0.9361	0.9280	—	0.9036	0.8991	0.8748	2B	0.883	0.895	0.9050	0.9109	0.9375
		3A	0.0000	0.9375	0.9294	—	0.9050	0.9016	0.8762	3B	0.8830	0.8912	0.9050	0.9094	0.9375
	NEF	2	0.0000	0.9375	0.9303	—	0.9050	0.9003	0.8762	2	0.8834	0.8906	0.9050	0.9097	0.9375
		3	0.0000	0.9375	0.9303	—	0.9050	0.9017	0.8762	3	0.8834	0.8906	0.9050	0.9083	0.9375
1 - 8	UNC	1A	0.0020	0.9980	0.9755	—	0.9168	0.9067	0.8446	1B	0.865	0.890	0.9188	0.9320	1.0000
		2A	0.0020	0.9980	0.9830	0.9755	0.9168	0.9100	0.8446	2B	0.865	0.890	0.9188	0.9276	1.0000
		3A	0.0000	1.0000	0.9850	—	0.9188	0.9137	0.8466	3B	0.8650	0.8797	0.9188	0.9254	1.0000
	NC	2	0.0000	1.0000	0.9848	0.9778	0.9188	0.9112	0.8466	2	0.8647	0.8795	0.9188	0.9264	1.0000
		3	0.0000	1.0000	0.9848	—	0.9188	0.9134	0.8466	3	0.8647	0.8795	0.9188	0.9242	1.0000
1 - 12	UNF	1A	0.0018	0.9982	0.9810	—	0.9441	0.9353	0.8960	1B	0.910	0.928	0.9459	0.9573	1.0000
		2A	0.0018	0.9982	0.9868	—	0.9441	0.9382	0.8960	2B	0.910	0.928	0.9459	0.9535	1.0000
		3A	0.0000	1.0000	0.9886	—	0.9459	0.9415	0.8978	3B	0.9100	0.9198	0.9459	0.9516	1.0000

a See Figure 1.
b For Class 2A, the maximum is increased by the amount of the allowance if the threads have an additive finish such as plating or coating.
c The juxtaposition of external and internal thread classes in this table does not indicate that they must be used in combination. See Section 4.
d For unfinished hot-rolled material.
e Revised minor diameter limits of Classes 1B and 2B are in process of ratification as Unified standard.

UNIFIED AND AMERICAN SCREW THREADS

TABLE 2 (CONTINUED) LIMITING DIMENSIONS OF STANDARD SERIES THREADS

Nominal Size and Threads Per Inch	Series Designation	EXTERNAL[c]								INTERNAL[c]					
		Class	Allowance	Major Diameter			Pitch Diameter		Minor Dia.[a]	Class	Minor Diameter[e]		Pitch Diameter		Major Dia.
				Max.[b]	Min.	Min.[d]	Max.[b]	Min.			Min.	Max.	Min.	Max.	Min.
1 - 12	N	2	0.0000	1.0000	0.9888	—	0.9459	0.9403	0.8978	2	0.9098	0.9188	0.9459	0.9515	1.0000
		3	0.0000	1.0000	0.9888	—	0.9459	0.9419	0.8978	3	0.9098	0.9188	0.9459	0.9499	1.0000
1 - 14	NS[f]	2	0.0000	1.0000	0.9902	—	0.9536	0.9487	0.9124	2	0.9227	0.9312	0.9536	0.9585	1.0000
		3	0.0000	1.0000	0.9902	—	0.9536	0.9500	0.9124	3	0.9227	0.9312	0.9536	0.9572	1.0000
1 - 16	UN	2A	0.0015	0.9985	0.9891	—	0.9579	0.9529	0.9218	2B	0.932	0.946	0.9594	0.9659	1.0000
		3A	0.0000	1.0000	0.9906	—	0.9594	0.9557	0.9233	3B	0.9320	0.9408	0.9594	0.9643	1.0000
	N	2	0.0000	1.0000	0.9910	—	0.9594	0.9542	0.9233	2	0.9323	0.9403	0.9594	0.9646	1.0000
		3	0.0000	1.0000	0.9910	—	0.9594	0.9557	0.9233	3	0.9323	0.9403	0.9594	0.9631	1.0000
1 - 20	UNEF	2A	0.0014	0.9986	0.9905	—	0.9661	0.9616	0.9373	2B	0.946	0.957	0.9675	0.9734	1.0000
		3A	0.0000	1.0000	0.9919	—	0.9675	0.9641	0.9387	3B	0.9460	0.9537	0.9675	0.9719	1.0000
	NEF	2	0.0000	1.0000	0.9928	—	0.9675	0.9627	0.9387	2	0.9459	0.9531	0.9675	0.9723	1.0000
		3	0.0000	1.0000	0.9928	—	0.9675	0.9641	0.9387	3	0.9459	0.9531	0.9675	0.9709	1.0000
1-1/16 - 12	UN	2A	0.0017	1.0608	1.0494	—	1.0067	1.0010	0.9586	2B	0.972	0.990	1.0084	1.0158	1.0625
		3A	0.0000	1.0625	1.0511	—	1.0084	1.0042	0.9603	3B	0.9720	0.9823	1.0084	1.0139	1.0625
	N	2	0.0000	1.0625	1.0513	—	1.0084	1.0028	0.9603	2	0.9723	0.9813	1.0084	1.0140	1.0625
		3	0.0000	1.0625	1.0513	—	1.0084	1.0044	0.9603	3	0.9723	0.9813	1.0084	1.0124	1.0625
1-1/16 - 16	UN	2A	0.0015	1.0610	1.0516	—	1.0204	1.0154	0.9843	2B	0.995	1.009	1.0219	1.0284	1.0625
		3A	0.0000	1.0625	1.0531	—	1.0219	1.0182	0.9858	3B	0.9950	1.0033	1.0219	1.0268	1.0625
	N	2	0.0000	1.0625	1.0535	—	1.0219	1.0166	0.9858	2	0.9948	1.0028	1.0219	1.0272	1.0625
		3	0.0000	1.0625	1.0535	—	1.0219	1.0182	0.9858	3	0.9948	1.0028	1.0219	1.0256	1.0625
1 1/16 - 18	NEF	2A	0.0014	1.0611	1.0524	—	1.0250	1.0203	0.9929	2B	1.002	1.015	1.0264	1.0326	1.0625
		3A	0.0000	1.0625	1.0538	—	1.0264	1.0228	0.9943	3B	1.0020	1.0105	1.0264	1.0310	1.0625
		2	0.0000	1.0625	1.0543	—	1.0264	1.0213	0.9943	2	1.0024	1.0100	1.0264	1.0315	1.0625
		3	0.0000	1.0625	1.0543	—	1.0264	1.0228	0.9943	3	1.0024	1.0100	1.0264	1.0300	1.0625
1 1/8 - 7	UNC	1A	0.0022	1.1228	1.0982	—	1.0300	1.0191	0.9475	1B	0.970	0.998	1.0322	1.0463	1.1250
		2A	0.0022	1.1228	1.1064	1.0982	1.0300	1.0228	0.9475	2B	0.970	0.998	1.0322	1.0416	1.1250
		3A	0.0000	1.1250	1.1086	—	1.0322	1.0268	0.9497	3B	0.9700	0.9875	1.0322	1.0393	1.1250
	NC	2	0.0000	1.1250	1.1080	1.1002	1.0322	1.0237	0.9497	2	0.9704	0.9858	1.0322	1.0407	1.1250
		3	0.0000	1.1250	1.1080	—	1.0322	1.0263	0.9497	3	0.9704	0.9858	1.0322	1.0381	1.1250
1 1/8 - 8	N	2A	0.0021	1.1229	1.1079	1.1004	1.0417	1.0348	0.9695	2B	0.990	1.015	1.0438	1.0528	1.1250
		3A	0.0000	1.1250	1.1100	—	1.0438	1.0386	0.9716	3B	0.9900	1.0047	1.0438	1.0505	1.1250
		2	0.0000	1.1250	1.1098	1.1028	1.0438	1.0359	0.9716	2	0.9897	1.0045	1.0438	1.0517	1.1250
		3	0.0000	1.1250	1.1098	—	1.0438	1.0383	0.9716	3	0.9897	1.0045	1.0438	1.0493	1.1250
1 1/8 - 12	UNF	1A	0.0018	1.1232	1.1060	—	1.0691	1.0601	1.0210	1B	1.035	1.053	1.0709	1.0826	1.1250
		2A	0.0018	1.1232	1.1118	—	1.0691	1.0631	1.0210	2B	1.035	1.053	1.0709	1.0787	1.1250
		3A	0.0000	1.1250	1.1136	—	1.0709	1.0664	1.0228	3B	1.0350	1.0448	1.0709	1.0768	1.1250

a See Figure 1.
b For Class 2A, the maximum is increased by the amount of the allowance if the threads have an additive finish such as plating or coating.
c The juxtaposition of external and internal thread classes in this table does not indicate that they must be used in combination. See Section 4.
d For unfinished hot-rolled material.
e Revised minor diameter limits of Classes 1B and 2B are in process of ratification as Unified standard.
f Was NF.

UNIFIED AND AMERICAN SCREW THREADS

TABLE 2 (CONTINUED) LIMITING DIMENSIONS OF STANDARD SERIES THREADS

Nominal Size and Threads Per Inch	Series Designation	EXTERNAL[c]								INTERNAL[c]					
		Class	Allowance	Major Diameter			Pitch Diameter		Minor Dia.[a]	Class	Minor Diameter[e]		Pitch Diameter		Major Dia.
				Max.[b]	Min.	Min.[d]	Max.[b]	Min.			Min.	Max.	Min.	Max.	Min.
1 - 1/8 - 12	NF	2	0.0000	1.1250	1.1138	—	1.0709	1.0653	1.0228	2	1.0348	1.0438	1.0709	1.0765	1.1250
		3	0.0000	1.1250	1.1138	—	1.0709	1.0669	1.0228	3	1.0348	1.0438	1.0709	1.0749	1.1250
1-1/8 - 16	UN	2A	0.0015	1.1235	1.1141	—	1.0829	1.0779	1.0468	2B	1.057	1.071	1.0844	1.0909	1.1250
		3A	0.0000	1.1250	1.1156	—	1.0844	1.0807	1.0483	3B	1.0570	1.0658	1.0844	1.0893	1.1250
	N	2	0.0000	1.1250	1.1160	—	1.0844	1.0790	1.0483	2	1.0573	1.0653	1.0844	1.0898	1.1250
		3	0.0000	1.1250	1.1160	—	1.0844	1.0806	1.0483	3	1.0573	1.0653	1.0844	1.0882	1.1250
1-1/8 - 18	NEF	2A	0.0014	1.1236	1.1149	—	1.0875	1.0828	1.0554	2B	1.065	1.078	1.0889	1.0951	1.1250
		3A	0.0000	1.1250	1.1163	—	1.0889	1.0853	1.0568	3B	1.0650	1.0730	1.0889	1.0935	1.1250
		2	0.0000	1.1250	1.1168	—	1.0889	1.0837	1.0568	2	1.0649	1.0725	1.0889	1.0941	1.1250
		3	0.0000	1.1250	1.1168	—	1.0889	1.0853	1.0568	3	1.0649	1.0725	1.0889	1.0925	1.1250
1-3/16 - 12	UN	2A	0.0017	1.1858	1.1744	—	1.1317	1.1259	1.0836	2B	1.097	1.115	1.1334	1.1409	1.1875
		3A	0.0000	1.1875	1.1761	—	1.1334	1.1291	1.0853	3B	1.0970	1.1073	1.1334	1.1390	1.1875
	N	2	0.0000	1.1875	1.1763	—	1.1334	1.1278	1.0853	2	1.0973	1.1063	1.1334	1.1390	1.1875
		3	0.0000	1.1875	1.1763	—	1.1334	1.1294	1.0853	3	1.0973	1.1063	1.1334	1.1374	1.1875
1-3/16 - 16	UN	2A	0.0015	1.1860	1.1766	—	1.1454	1.1403	1.1093	2B	1.120	1.134	1.1469	1.1535	1.1875
		3A	0.0000	1.1875	1.1781	—	1.1469	1.1431	1.1108	3B	1.1200	1.1283	1.1469	1.1519	1.1875
	N	2	0.0000	1.1875	1.1785	—	1.1469	1.1415	1.1108	2	1.1198	1.1278	1.1469	1.1523	1.1875
		3	0.0000	1.1875	1.1785	—	1.1469	1.1431	1.1108	3	1.1198	1.1278	1.1469	1.1507	1.1875
1-3/16 - 18	NEF	2A	0.0015	1.1860	1.1773	—	1.1499	1.1450	1.1178	2B	1.127	1.140	1.1514	1.1577	1.1875
		3A	0.0000	1.1875	1.1788	—	1.1514	1.1478	1.1193	3B	1.1270	1.1355	1.1514	1.1561	1.1875
		2	0.0000	1.1875	1.1793	—	1.1514	1.1462	1.1193	2	1.1274	1.1350	1.1514	1.1566	1.1875
		3	0.0000	1.1875	1.1793	—	1.1514	1.1478	1.1193	3	1.1274	1.1350	1.1514	1.1550	1.1875
1-1/4 - 7	UNC	1A	0.0022	1.2478	1.2232	—	1.1550	1.1439	1.0725	1B	1.095	1.123	1.1572	1.1716	1.2500
		2A	0.0022	1.2478	1.2314	1.2232	1.1550	1.1476	1.0725	2B	1.095	1.123	1.1572	1.1668	1.2500
		3A	0.0000	1.2500	1.2336	—	1.1572	1.1517	1.0747	3B	1.0950	1.1125	1.1572	1.1644	1.2500
	NC	2	0.0000	1.2500	1.2330	1.2252	1.1572	1.1487	1.0747	2	1.0954	1.1108	1.1572	1.1657	1.2500
		3	0.0000	1.2500	1.2330	—	1.1572	1.1513	1.0747	3	1.0954	1.1108	1.1572	1.1631	1.2500
1 - 1/4 - 8	N	2A	0.0021	1.2479	1.2329	1.2254	1.1667	1.1597	1.0945	2B	1.115	1.140	1.1688	1.1780	1.2500
		3A	0.0000	1.2500	1.2350	—	1.1688	1.1635	1.0966	3B	1.1150	1.1297	1.1688	1.1757	1.2500
		2	0.0000	1.2500	1.2348	1.2278	1.1688	1.1605	1.0966	2	1.1147	1.1295	1.1688	1.1771	1.2500
		3	0.0000	1.2500	1.2348	—	1.1688	1.1630	1.0966	3	1.1147	1.1295	1.1688	1.1746	1.2500
1-1/4 - 12	UNF	1A	0.0018	1.2482	1.2310	—	1.1941	1.1849	1.1460	1B	1.160	1.178	1.1959	1.2079	1.2500
		2A	0.0018	1.2482	1.2368	—	1.1941	1.1879	1.1460	2B	1.160	1.178	1.1959	1.2039	1.2500
		3A	0.0000	1.2500	1.2386	—	1.1959	1.1913	1.1478	3B	1.1600	1.1698	1.1959	1.2019	1.2500
	NF	2	0.0000	1.2500	1.2388	—	1.1959	1.1903	1.1478	2	1.1598	1.1688	1.1959	1.2015	1.2500
		3	0.0000	1.2500	1.2388	—	1.1959	1.1919	1.1478	3	1.1598	1.1688	1.1959	1.1999	1.2500
1-1/4 - 16	UN	2A	0.0015	1.2485	1.2391	—	1.2079	1.2028	1.1718	2B	1.182	1.196	1.2094	1.2160	1.2500
		3A	0.0000	1.2500	1.2406	—	1.2094	1.2056	1.1733	3B	1.1820	1.1908	1.2094	1.2144	1.2500

a See Figure 1.
b For Class 2A, the maximum is increased by the amount of the allowance if the threads have an additive finish such as plating or coating.
c The juxtaposition of external and internal thread classes in this table does not indicate that they must be used in combination. See Section 4.
d For unfinished hot-rolled material.
e Revised minor diameter limits of Classes 1B and 2B are in process of ratification as Unified standard.

UNIFIED AND AMERICAN SCREW THREADS

TABLE 2 (CONTINUED) LIMITING DIMENSIONS OF STANDARD SERIES THREADS

Nominal Size and Threads Per Inch	Series Designation	EXTERNAL[c]								INTERNAL[c]					
		Class	Allowance	Major Diameter			Pitch Diameter		Minor Dia.[a]	Class	Minor Diameter[e]		Pitch Diameter		Major Dia.
				Max.[b]	Min.	Min.[d]	Max.[b]	Min.			Min.	Max.	Min.	Max.	Min.
1-1/4 - 16	N	2	0.0000	1.2500	1.2410	—	1.2094	1.2039	1.1733	2	1.1823	1.1903	1.2094	1.2149	1.2500
		3	0.0000	1.2500	1.2410	—	1.2094	1.2056	1.1733	3	1.1823	1.1903	1.2094	1.2132	1.2500
1-1/4 - 18	NEF	2A	0.0015	1.2485	1.2398	—	1.2124	1.2075	1.1803	2B	1.190	1.203	1.2139	1.2202	1.2500
		3A	0.0000	1.2500	1.2413	—	1.2139	1.2103	1.1818	3B	1.1900	1.1980	1.2139	1.2186	1.2500
		2	0.0000	1.2500	1.2418	—	1.2139	1.2086	1.1818	2	1.1899	1.1975	1.2139	1.2192	1.2500
		3	0.0000	1.2500	1.2418	—	1.2139	1.2102	1.1818	3	1.1899	1.1975	1.2139	1.2176	1.2500
1-5/16 - 12	UN	2A	0.0017	1.3108	1.2994	—	1.2567	1.2509	1.2086	2B	1.222	1.240	1.2584	1.2659	1.3125
		3A	0.0000	1.3125	1.3011	—	1.2584	1.2541	1.2103	3B	1.2220	1.2323	1.2584	1.2640	1.3125
	N	2	0.0000	1.3125	1.3013	—	1.2584	1.2528	1.2103	2	1.2223	1.2313	1.2584	1.2640	1.3125
		3	0.0000	1.3125	1.3013	—	1.2584	1.2544	1.2103	3	1.2223	1.2313	1.2584	1.2624	1.3125
1-5/16 - 16	UN	2A	0.0015	1.3110	1.3016	—	1.2704	1.2653	1.2343	2B	1.245	1.259	1.2719	1.2785	1.3125
		3A	0.0000	1.3125	1.3031	—	1.2719	1.2681	1.2358	3B	1.2450	1.2533	1.2719	1.2769	1.3125
	N	2	0.0000	1.3125	1.3035	—	1.2719	1.2664	1.2358	2	1.2448	1.2528	1.2719	1.2774	1.3125
		3	0.0000	1.3125	1.3035	—	1.2719	1.2680	1.2358	3	1.2448	1.2528	1.2719	1.2758	1.3125
1-5/16 - 18	NEF	2A	0.0015	1.3110	1.3023	—	1.2749	1.2700	1.2428	2B	1.252	1.265	1.2764	1.2827	1.3125
		3A	0.0000	1.3125	1.3038	—	1.2764	1.2728	1.2443	3B	1.2520	1.2605	1.2764	1.2811	1.3125
		2	0.0000	1.3125	1.3043	—	1.2764	1.2711	1.2443	2	1.2524	1.2600	1.2764	1.2817	1.3125
		3	0.0000	1.3125	1.3043	—	1.2764	1.2727	1.2443	3	1.2524	1.2600	1.2764	1.2801	1.3125
1-3/8 - 6	UNC	1A	0.0024	1.3726	1.3453	—	1.2643	1.2523	1.1681	1B	1.195	1.225	1.2667	1.2823	1.3750
		2A	0.0024	1.3726	1.3544	1.3453	1.2643	1.2563	1.1681	2B	1.195	1.225	1.2667	1.2771	1.3750
		3A	0.0000	1.3750	1.3568	—	1.2667	1.2607	1.1705	3B	1.1950	1.2146	1.2667	1.2745	1.3750
	NC	2	0.0000	1.3750	1.3548	1.3460	1.2667	1.2566	1.1705	2	1.1946	1.2126	1.2667	1.2768	1.3750
		3	0.0000	1.3750	1.3548	—	1.2667	1.2596	1.1705	3	1.1946	1.2126	1.2667	1.2738	1.3750
1-3/8 - 8	N	2A	0.0022	1.3728	1.3578	1.3503	1.2916	1.2844	1.2194	2B	1.240	1.265	1.2938	1.3031	1.3750
		3A	0.0000	1.3750	1.3600	—	1.2938	1.2884	1.2216	3B	1.2400	1.2547	1.2938	1.3008	1.3750
		2	0.0000	1.3750	1.3598	1.3528	1.2938	1.2852	1.2216	2	1.2397	1.2545	1.2938	1.3024	1.3750
		3	0.0000	1.3750	1.3598	—	1.2938	1.2877	1.2216	3	1.2397	1.2545	1.2938	1.2999	1.3750
1-3/8 - 12	UNF	1A	0.0019	1.3731	1.3559	—	1.3190	1.3096	1.2709	1B	1.285	1.303	1.3209	1.3332	1.3750
		2A	0.0019	1.3731	1.3617	—	1.3190	1.3127	1.2709	2B	1.285	1.303	1.3209	1.3291	1.3750
		3A	0.0000	1.3750	1.3636	—	1.3209	1.3162	1.2728	3B	1.2850	1.2948	1.3209	1.3270	1.3750
	NF	2	0.0000	1.3750	1.3638	—	1.3209	1.3153	1.2728	2	1.2848	1.2938	1.3209	1.3265	1.3750
		3	0.0000	1.3750	1.3638	—	1.3209	1.3169	1.2728	3	1.2848	1.2938	1.3209	1.3249	1.3750
1-3/8 - 16	UN	2A	0.0015	1.3735	1.3641	—	1.3329	1.3278	1.2968	2B	1.307	1.321	1.3344	1.3410	1.3750
		3A	0.0000	1.3750	1.3656	—	1.3344	1.3306	1.2983	3B	1.3070	1.3158	1.3344	1.3394	1.3750
	N	2	0.0000	1.3750	1.3660	—	1.3344	1.3288	1.2983	2	1.3073	1.3153	1.3344	1.3400	1.3750
		3	0.0000	1.3750	1.3660	—	1.3344	1.3305	1.2983	3	1.3073	1.3153	1.3344	1.3383	1.3750
1-3/8 - 18	NEF	2A	0.0015	1.3735	1.3648	—	1.3374	1.3325	1.3053	2B	1.315	1.328	1.3389	1.3452	1.3750
		3A	0.0000	1.3750	1.3663	—	1.3389	1.3353	1.3068	3B	1.3150	1.3230	1.3389	1.3436	1.3750

a See Figure 1.
b For Class 2A, the maximum is increased by the amount of the allowance if the threads have an additive finish such as plating or coating.
c The juxtaposition of external and internal thread classes in this table does not indicate that they must be used in combination. See Section 4.
d For unfinished hot-rolled material.
e Revised minor diameter limits of Classes 1B and 2B are in process of ratification as Unified standard.

UNIFIED AND AMERICAN SCREW THREADS

TABLE 2 (CONTINUED) LIMITING DIMENSIONS OF STANDARD SERIES THREADS

Nominal Size and Threads Per Inch	Series Designation	EXTERNAL[c]								INTERNAL[c]					
		Class	Allowance	Major Diameter			Pitch Diameter		Minor Dia.[a]	Class	Minor Diameter[e]		Pitch Diameter		Major Dia.
				Max.[b]	Min.	Min.[d]	Max.[b]	Min.			Min.	Max.	Min.	Max.	Min.
1-3/8-18	NEF	2	0.0000	1.3750	1.3668	—	1.3389	1.3335	1.3068	2	1.3149	1.3225	1.3389	1.3443	1.3750
		3	0.0000	1.3750	1.3668	—	1.3389	1.3351	1.3068	3	1.3149	1.3225	1.3389	1.3427	1.3750
1-7/16-12	UN	2A	0.0018	1.4357	1.4243	—	1.3816	1.3757	1.3335	2B	1.347	1.365	1.3834	1.3910	1.4375
		3A	0.0000	1.4375	1.4261	—	1.3834	1.3790	1.3353	3B	1.3470	1.3573	1.3834	1.3891	1.4375
	N	2	0.0000	1.4375	1.4263	—	1.3834	1.3778	1.3353	2	1.3473	1.3563	1.3834	1.3890	1.4375
		3	0.0000	1.4375	1.4263	—	1.3834	1.3794	1.3353	3	1.3473	1.3563	1.3834	1.3874	1.4375
1-7/16-16	UN	2A	0.0016	1.4359	1.4265	—	1.3953	1.3901	1.3592	2B	1.370	1.384	1.3969	1.4037	1.4375
		3A	0.0000	1.4375	1.4281	—	1.3969	1.3930	1.3608	3B	1.3700	1.3783	1.3969	1.4020	1.4375
	N	2	0.0000	1.4375	1.4285	—	1.3969	1.3913	1.3608	2	1.3698	1.3778	1.3969	1.4025	1.4375
		3	0.0000	1.4375	1.4285	—	1.3969	1.3929	1.3608	3	1.3698	1.3778	1.3969	1.4009	1.4375
1-7/16-18	NEF	2A	0.0015	1.4360	1.4273	—	1.3999	1.3949	1.3678	2B	1.377	1.390	1.4014	1.4079	1.4375
		3A	0.0000	1.4375	1.4288	—	1.4014	1.3977	1.3693	3B	1.3770	1.3855	1.4014	1.4062	1.4375
		2	0.0000	1.4375	1.4293	—	1.4014	1.3960	1.3693	2	1.3774	1.3850	1.4014	1.4068	1.4375
		3	0.0000	1.4375	1.4293	—	1.4014	1.3976	1.3693	3	1.3774	1.3850	1.4014	1.4052	1.4375
1-1/2-6	UNC	1A	0.0024	1.4976	1.4703	—	1.3893	1.3772	1.2931	1B	1.320	1.350	1.3917	1.4075	1.5000
		2A	0.0024	1.4976	1.4794	1.4703	1.3893	1.3812	1.2931	2B	1.320	1.350	1.3917	1.4022	1.5000
		3A	0.0000	1.5000	1.4818	—	1.3917	1.3856	1.2955	3B	1.3200	1.3396	1.3917	1.3996	1.5000
	NC	2	0.0000	1.5000	1.4798	1.4710	1.3917	1.3816	1.2955	2	1.3196	1.3376	1.3917	1.4018	1.5000
		3	0.0000	1.5000	1.4798	—	1.3917	1.3846	1.2955	3	1.3196	1.3376	1.3917	1.3988	1.5000
1-1/2-8	N	2A	0.0022	1.4978	1.4828	1.4753	1.4166	1.4093	1.3444	2B	1.365	1.390	1.4188	1.4283	1.5000
		3A	0.0000	1.5000	1.4850	—	1.4188	1.4133	1.3466	3B	1.3650	1.3797	1.4188	1.4259	1.5000
		2	0.0000	1.5000	1.4848	1.4778	1.4188	1.4098	1.3466	2	1.3647	1.3795	1.4188	1.4278	1.5000
		3	0.0000	1.5000	1.4848	—	1.4188	1.4125	1.3466	3	1.3647	1.3795	1.4188	1.4251	1.5000
1-1/2-12	UNF	1A	0.0019	1.4981	1.4809	—	1.4440	1.4344	1.3959	1B	1.410	1.428	1.4459	1.4584	1.5000
		2A	0.0019	1.4981	1.4867	—	1.4440	1.4376	1.3959	2B	1.410	1.428	1.4459	1.4542	1.5000
		3A	0.0000	1.5000	1.4886	—	1.4459	1.4411	1.3978	3B	1.4100	1.4198	1.4459	1.4522	1.5000
	NF	2	0.0000	1.5000	1.4888	—	1.4459	1.4403	1.3978	2	1.4098	1.4188	1.4459	1.4515	1.5000
		3	0.0000	1.5000	1.4888	—	1.4459	1.4419	1.3978	3	1.4098	1.4188	1.4459	1.4499	1.5000
1-1/2-16	UN	2A	0.0016	1.4984	1.4890	—	1.4578	1.4526	1.4217	2B	1.432	1.446	1.4594	1.4662	1.5000
		3A	0.0000	1.5000	1.4906	—	1.4594	1.4555	1.4233	3B	1.4320	1.4408	1.4594	1.4645	1.5000
	N	2	0.0000	1.5000	1.4910	—	1.4594	1.4537	1.4233	2	1.4323	1.4403	1.4594	1.4651	1.5000
		3	0.0000	1.5000	1.4910	—	1.4594	1.4554	1.4233	3	1.4323	1.4403	1.4594	1.4634	1.5000
1-1/2-18	NEF	2A	0.0015	1.4985	1.4898	—	1.4624	1.4574	1.4303	2B	1.440	1.453	1.4639	1.4704	1.5000
		3A	0.0000	1.5000	1.4913	—	1.4639	1.4602	1.4318	3B	1.4400	1.4480	1.4639	1.4687	1.5000
		2	0.0000	1.5000	1.4918	—	1.4639	1.4584	1.4318	2	1.4399	1.4475	1.4639	1.4694	1.5000
		3	0.0000	1.5000	1.4918	—	1.4639	1.4601	1.4318	3	1.4399	1.4475	1.4639	1.4677	1.5000
1-9/16-16	N	2A	0.0016	1.5609	1.5515	—	1.5203	1.5151	1.4842	2B	1.495	1.509	1.5219	1.5287	1.5625
		3A	0.0000	1.5625	1.5531	—	1.5219	1.5180	1.4858	3B	1.4950	1.5033	1.5219	1.5270	1.5625

a See Figure 1.
b For Class 2A, the maximum is increased by the amount of the allowance if the threads have an additive finish such as plating or coating.
c The juxtaposition of external and internal thread classes in this table does not indicate that they must be used in combination. See Section 4.
d For unfinished hot-rolled material.
e Revised minor diameter limits of Classes 1B and 2B are in process of ratification as Unified standard.

UNIFIED AND AMERICAN SCREW THREADS

TABLE 2 (CONTINUED) LIMITING DIMENSIONS OF STANDARD SERIES THREADS

Nominal Size and Threads Per Inch	Series Designation	EXTERNAL[c]								INTERNAL[c]					
		Class	Allowance	Major Diameter			Pitch Diameter		Minor Dia.[a]	Class	Minor Diameter[e]		Pitch Diameter		Major Dia.
				Max.[b]	Min.	Min.[d]	Max.[b]	Min.			Min.	Max.	Min.	Max.	Min.
1-9/16 - 16	N	2	0.0000	1.5625	1.5535	—	1.5219	1.5161	1.4858	2	1.4948	1.5028	1.5219	1.5277	1.5625
		3	0.0000	1.5625	1.5535	—	1.5219	1.5179	1.4858	3	1.4948	1.5028	1.5219	1.5259	1.5625
1-9/16 - 18	NEF	2A	0.0015	1.5610	1.5523	—	1.5249	1.5199	1.4928	2B	1.502	1.515	1.5264	1.5329	1.5625
		3A	0.0000	1.5625	1.5538	—	1.5264	1.5227	1.4943	3B	1.5020	1.5105	1.5264	1.5312	1.5625
		2	0.0000	1.5625	1.5543	—	1.5264	1.5209	1.4943	2	1.5024	1.5100	1.5264	1.5319	1.5625
		3	0.0000	1.5625	1.5543	—	1.5264	1.5225	1.4943	3	1.5024	1.5100	1.5264	1.5303	1.5625
1-5/8 - 8	N	2A	0.0022	1.6228	1.6078	1.6003	1.5416	1.5342	1.4694	2B	1.490	1.515	1.5438	1.5535	1.6250
		3A	0.0000	1.6250	1.6100	—	1.5438	1.5382	1.4716	3B	1.4900	1.5047	1.5438	1.5510	1.6250
		2	0.0000	1.6250	1.6098	1.6028	1.5438	1.5345	1.4716	2	1.4897	1.5045	1.5438	1.5531	1.6250
		3	0.0000	1.6250	1.6098	—	1.5438	1.5373	1.4716	3	1.4897	1.5045	1.5438	1.5503	1.6250
1-5/8 - 12	UN	2A	0.0018	1.6232	1.6118	—	1.5691	1.5632	1.5210	2B	1.535	1.553	1.5709	1.5785	1.6250
		3A	0.0000	1.6250	1.6136	—	1.5709	1.5665	1.5228	3B	1.5350	1.5448	1.5709	1.5766	1.6250
	N	2	0.0000	1.6250	1.6138	—	1.5709	1.5645	1.5228	2	1.5348	1.5438	1.5709	1.5773	1.6250
		3	0.0000	1.6250	1.6138	—	1.5709	1.5664	1.5228	3	1.5348	1.5438	1.5709	1.5754	1.6250
1-5/8 - 16	UN	2A	0.0016	1.6234	1.6140	—	1.5828	1.5776	1.5467	2B	1.557	1.571	1.5844	1.5912	1.6250
		3A	0.0000	1.6250	1.6156	—	1.5844	1.5805	1.5483	3B	1.5570	1.5658	1.5844	1.5895	1.6250
	N	2	0.0000	1.6250	1.6160	—	1.5844	1.5786	1.5483	2	1.5573	1.5653	1.5844	1.5902	1.6250
		3	0.0000	1.6250	1.6160	—	1.5844	1.5803	1.5483	3	1.5573	1.5653	1.5844	1.5885	1.6250
1-5/8 - 18	NEF	2A	0.0015	1.6235	1.6148	—	1.5874	1.5824	1.5553	2B	1.565	1.578	1.5889	1.5954	1.6250
		3A	0.0000	1.6250	1.6163	—	1.5889	1.5852	1.5568	3B	1.5650	1.5730	1.5889	1.5937	1.6250
		2	0.0000	1.6250	1.6168	—	1.5889	1.5833	1.5568	2	1.5649	1.5725	1.5889	1.5945	1.6250
		3	0.0000	1.6250	1.6168	—	1.5889	1.5850	1.5568	3	1.5649	1.5725	1.5889	1.5928	1.6250
1-11/16 - 16	N	2A	0.0016	1.6859	1.6765	—	1.6453	1.6400	1.6092	2B	1.620	1.634	1.6469	1.6538	1.6875
		3A	0.0000	1.6875	1.6781	—	1.6469	1.6429	1.6108	3B	1.6200	1.6283	1.6469	1.6521	1.6875
		2	0.0000	1.6875	1.6785	—	1.6469	1.6411	1.6108	2	1.6198	1.6278	1.6469	1.6527	1.6875
		3	0.0000	1.6875	1.6785	—	1.6469	1.6428	1.6108	3	1.6198	1.6278	1.6469	1.6510	1.6875
1-11/16 - 18	NEF	2A	0.0015	1.6860	1.6773	—	1.6499	1.6448	1.6178	2B	1.627	1.640	1.6514	1.6580	1.6875
		3A	0.0000	1.6875	1.6788	—	1.6514	1.6476	1.6193	3B	1.6270	1.6355	1.6514	1.6563	1.6875
		2	0.0000	1.6875	1.6793	—	1.6514	1.6458	1.6193	2	1.6274	1.6350	1.6514	1.6570	1.6875
		3	0.0000	1.6875	1.6793	—	1.6514	1.6475	1.6193	3	1.6274	1.6350	1.6514	1.6553	1.6875
1-3/4 - 5	UNC	1A	0.0027	1.7473	1.7165	—	1.6174	1.6040	1.5019	1B	1.534	1.568	1.6201	1.6375	1.7500
		2A	0.0027	1.7473	1.7268	1.7165	1.6174	1.6085	1.5019	2B	1.534	1.568	1.6201	1.6317	1.7500
		3A	0.0000	1.7500	1.7295	—	1.6201	1.6134	1.5046	3B	1.5340	1.5575	1.6201	1.6288	1.7500
	NC	2	0.0000	1.7500	1.7268	1.7162	1.6201	1.6085	1.5046	2	1.5335	1.5551	1.6201	1.6317	1.7500
		3	0.0000	1.7500	1.7268	—	1.6201	1.6119	1.5046	3	1.5335	1.5551	1.6201	1.6283	1.7500
1-3/4 - 8	N	2A	0.0023	1.7477	1.7327	1.7252	1.6665	1.6590	1.5943	2B	1.615	1.640	1.6688	1.6786	1.7500
		3A	0.0000	1.7500	1.7350	—	1.6688	1.6632	1.5966	3B	1.6150	1.6297	1.6688	1.6762	1.7500
		2	0.0000	1.7500	1.7348	1.7278	1.6688	1.6591	1.5966	2	1.6147	1.6295	1.6688	1.6785	1.7500
		3	0.0000	1.7500	1.7348	—	1.6688	1.6620	1.5966	3	1.6147	1.6295	1.6688	1.6756	1.7500

a See Figure 1.
b For Class 2A, the maximum is increased by the amount of the allowance if the threads have an additive finish such as plating or coating.
c The juxtaposition of external and internal thread classes in this table does not indicate that they must be used in combination. See Section 4.
d For unfinished hot-rolled material.
e Revised minor diameter limits of Classes 1B and 2B are in process of ratification as Unified standard.

UNIFIED AND AMERICAN SCREW THREADS

TABLE 2 (CONTINUED) LIMITING DIMENSIONS OF STANDARD SERIES THREADS

Nominal Size and Threads Per Inch	Series Designation	EXTERNAL[c]								INTERNAL[c]					
		Class	Allowance	Major Diameter			Pitch Diameter		Minor Dia.[a]	Class	Minor Diameter[e]		Pitch Diameter		Major Dia.
				Max.[b]	Min.	Min.[d]	Max.[b]	Min.			Min.	Max.	Min.	Max.	Min.
1-3/4 - 12	UN	2A	0.0018	1.7482	1.7368	—	1.6941	1.6881	1.6460	2B	1.660	1.678	1.6959	1.7037	1.7500
		3A	0.0000	1.7500	1.7386	—	1.6959	1.6914	1.6478	3B	1.6600	1.6698	1.6959	1.7017	1.7500
	N	2	0.0000	1.7500	1.7388	—	1.6959	1.6894	1.6478	2	1.6598	1.6688	1.6959	1.7024	1.7500
		3	0.0000	1.7500	1.7388	—	1.6959	1.6913	1.6478	3	1.6598	1.6688	1.6959	1.7005	1.7500
1-3/4 - 16	UNEF	2A	0.0016	1.7484	1.7390	—	1.7078	1.7025	1.6717	2B	1.682	1.696	1.7094	1.7163	1.7500
		3A	0.0000	1.7500	1.7406	—	1.7094	1.7054	1.6733	3B	1.6820	1.6908	1.7094	1.7146	1.7500
	NEF	2	0.0000	1.7500	1.7410	—	1.7094	1.7035	1.6733	2	1.6823	1.6903	1.7094	1.7153	1.7500
		3	0.0000	1.7500	1.7410	—	1.7094	1.7053	1.6733	3	1.6823	1.6903	1.7094	1.7135	1.7500
1-13/16 - 16	N	2A	0.0016	1.8109	1.8015	—	1.7703	1.7650	1.7342	2B	1.745	1.759	1.7719	1.7788	1.8125
		3A	0.0000	1.8125	1.8031	—	1.7719	1.7679	1.7358	3B	1.7450	1.7533	1.7719	1.7771	1.8125
		2	0.0000	1.8125	1.8035	—	1.7719	1.7660	1.7358	2	1.7448	1.7528	1.7719	1.7778	1.8125
		3	0.0000	1.8125	1.8035	—	1.7719	1.7677	1.7358	3	1.7448	1.7528	1.7719	1.7761	1.8125
1-7/8 - 8	N	2A	0.0023	1.8727	1.8577	1.8502	1.7915	1.7838	1.7193	2B	1.740	1.765	1.7938	1.8038	1.8750
		3A	0.0000	1.8750	1.8600	—	1.7938	1.7881	1.7216	3B	1.7400	1.7547	1.7938	1.8013	1.8750
		2	0.0000	1.8750	1.8598	1.8528	1.7938	1.7838	1.7216	2	1.7397	1.7545	1.7938	1.8038	1.8750
		3	0.0000	1.8750	1.8598	—	1.7938	1.7868	1.7216	3	1.7397	1.7545	1.7938	1.8008	1.8750
1-7/8 - 12	UN	2A	0.0018	1.8732	1.8618	—	1.8191	1.8131	1.7710	2B	1.785	1.803	1.8209	1.8287	1.8750
		3A	0.0000	1.8750	1.8636	—	1.8209	1.8164	1.7728	3B	1.7850	1.7948	1.8209	1.8267	1.8750
	N	2	0.0000	1.8750	1.8638	—	1.8209	1.8143	1.7728	2	1.7848	1.7938	1.8209	1.8275	1.8750
		3	0.0000	1.8750	1.8638	—	1.8209	1.8163	1.7728	3	1.7848	1.7938	1.8209	1.8255	1.8750
1-7/8 - 16	UN	2A	0.0016	1.8734	1.8640	—	1.8328	1.8275	1.7967	2B	1.807	1.821	1.8344	1.8413	1.8750
		3A	0.0000	1.8750	1.8656	—	1.8344	1.8304	1.7983	3B	1.8070	1.8158	1.8344	1.8396	1.8750
	N	2	0.0000	1.8750	1.8660	—	1.8344	1.8284	1.7983	2	1.8073	1.8153	1.8344	1.8404	1.8750
		3	0.0000	1.8750	1.8660	—	1.8344	1.8302	1.7983	3	1.8073	1.8153	1.8344	1.8386	1.8750
1-15/16 - 16	N	2A	0.0016	1.9359	1.9265	—	1.8953	1.8899	1.8592	2B	1.870	1.884	1.8969	1.9039	1.9375
		3A	0.0000	1.9375	1.9281	—	1.8969	1.8929	1.8608	3B	1.8700	1.8783	1.8969	1.9021	1.9375
		2	0.0000	1.9375	1.9285	—	1.8969	1.8909	1.8608	2	1.8698	1.8778	1.8969	1.9029	1.9375
		3	0.0000	1.9375	1.9285	—	1.8969	1.8927	1.8608	3	1.8698	1.8778	1.8969	1.9011	1.9375
2 - 4-1/2	UNC	1A	0.0029	1.9971	1.9641	—	1.8528	1.8385	1.7245	1B	1.759	1.795	1.8557	1.8743	2.0000
		2A	0.0029	1.9971	1.9751	1.9641	1.8528	1.8433	1.7245	2B	1.759	1.795	1.8557	1.8681	2.0000
		3A	0.0000	2.0000	1.9780	—	1.8557	1.8486	1.7274	3B	1.7590	1.7861	1.8557	1.8650	2.0000
	NC	2	0.0000	2.0000	1.9746	1.9632	1.8557	1.8430	1.7274	2	1.7594	1.7835	1.8557	1.8684	2.0000
		3	0.0000	2.0000	1.9746	—	1.8557	1.8468	1.7274	3	1.7594	1.7835	1.8557	1.8646	2.0000
2 - 8	N	2A	0.0023	1.9977	1.9827	1.9752	1.9165	1.9087	1.8443	2B	1.865	1.890	1.9188	1.9289	2.0000
		3A	0.0000	2.0000	1.9850	—	1.9188	1.9130	1.8466	3B	1.8650	1.8797	1.9188	1.9264	2.0000
		2	0.0000	2.0000	1.9848	1.9778	1.9188	1.9084	1.8466	2	1.8647	1.8795	1.9188	1.9292	2.0000
		3	0.0000	2.0000	1.9848	—	1.9188	1.9115	1.8466	3	1.8647	1.8795	1.9188	1.9261	2.0000

a See Figure 1.
b For Class 2A, the maximum is increased by the amount of the allowance if the threads have an additive finish such as plating or coating.
c The juxtaposition of external and internal thread classes in this table does not indicate that they must be used in combination. See Section 4.
d For unfinished hot-rolled material.
e Revised minor diameter limits of Classes 1B and 2B are in process of ratification as Unified standard.

UNIFIED AND AMERICAN SCREW THREADS

TABLE 2 (CONTINUED) LIMITING DIMENSIONS OF STANDARD SERIES THREADS

Nominal Size and Threads Per Inch	Series Designation	EXTERNAL[c]								INTERNAL[c]					
		Class	Allowance	Major Diameter			Pitch Diameter		Minor Dia.[a]	Class	Minor Diameter[e]		Pitch Diameter		Major Dia.
				Max.[b]	Min.	Min.[d]	Max.[b]	Min.			Min.	Max.	Min.	Max.	Min.
2 - 12	UN	2A	0.0018	1.9982	1.9868	—	1.9441	1.9380	1.8960	2B	1.910	1.928	1.9459	1.9538	2.0000
		3A	0.0000	2.0000	1.9886	—	1.9459	1.9414	1.8978	3B	1.9100	1.9198	1.9459	1.9518	2.0000
	N	2	0.0000	2.0000	1.9888	—	1.9459	1.9392	1.8978	2	1.9098	1.9188	1.9459	1.9526	2.0000
		3	0.0000	2.0000	1.9888	—	1.9459	1.9412	1.8978	3	1.9098	1.9188	1.9459	1.9506	2.0000
2 - 16	UNEF	2A	0.0016	1.9984	1.9890	—	1.9578	1.9524	1.9217	2B	1.932	1.946	1.9594	1.9664	2.0000
		3A	0.0000	2.0000	1.9906	—	1.9594	1.9554	1.9233	3B	1.9320	1.9408	1.9594	1.9646	2.0000
	NEF	2	0.0000	2.0000	1.9910	—	1.9594	1.9533	1.9233	2	1.9323	1.9403	1.9594	1.9655	2.0000
		3	0.0000	2.0000	1.9910	—	1.9594	1.9551	1.9233	3	1.9323	1.9403	1.9594	1.9637	2.0000
2-1/16 - 16	N	2A	0.0016	2.0609	2.0515	—	2.0203	2.0149	1.9842	2B	1.995	2.009	2.0219	2.0289	2.0625
		3A	0.0000	2.0625	2.0531	—	2.0219	2.0179	1.9858	3B	1.9950	2.0033	2.0219	2.0271	2.0625
		2	0.0000	2.0625	2.0535	—	2.0219	2.0158	1.9858	2	1.9948	2.0028	2.0219	2.0280	2.0625
		3	0.0000	2.0625	2.0535	—	2.0219	2.0176	1.9858	3	1.9948	2.0028	2.0219	2.0262	2.0625
2-1/8 - 8	N	2A	0.0024	2.1226	2.1076	2.1001	2.0414	2.0335	1.9692	2B	1.990	2.015	2.0438	2.0540	2.1250
		3A	0.0000	2.1250	2.1100	—	2.0438	2.0379	1.9716	3B	1.9900	2.0047	2.0438	2.0515	2.1250
		2	0.0000	2.1250	2.1098	2.1028	2.0438	2.0331	1.9716	2	1.9897	2.0045	2.0438	2.0545	2.1250
		3	0.0000	2.1250	2.1098	—	2.0438	2.0363	1.9716	3	1.9897	2.0045	2.0438	2.0513	2.1250
2-1/8 - 12	UN	2A	0.0018	2.1232	2.1118	—	2.0691	2.0630	2.0210	2B	2.035	2.053	2.0709	2.0788	2.1250
		3A	0.0000	2.1250	2.1136	—	2.0709	2.0664	2.0228	3B	2.0350	2.0448	2.0709	2.0768	2.1250
	N	2	0.0000	2.1250	2.1138	—	2.0709	2.0641	2.0228	2	2.0348	2.0438	2.0709	2.0777	2.1250
		3	0.0000	2.1250	2.1138	—	2.0709	2.0661	2.0228	3	2.0348	2.0438	2.0709	2.0757	2.1250
2-1/8 - 16	UN	2A	0.0016	2.1234	2.1140	—	2.0828	2.0774	2.0467	2B	2.057	2.071	2.0844	2.0914	2.1250
		3A	0.0000	2.1250	2.1156	—	2.0844	2.0804	2.0483	3B	2.0570	2.0658	2.0844	2.0896	2.1250
	N	2	0.0000	2.1250	2.1160	—	2.0844	2.0782	2.0483	2	2.0573	2.0653	2.0844	2.0906	2.1250
		3	0.0000	2.1250	2.1160	—	2.0844	2.0801	2.0483	3	2.0573	2.0653	2.0844	2.0887	2.1250
2-3/16 - 16	N	2A	0.0016	2.1859	2.1765	—	2.1453	2.1399	2.1092	2B	2.120	2.134	2.1469	2.1539	2.1875
		3A	0.0000	2.1875	2.1781	—	2.1469	2.1429	2.1108	3B	2.1200	2.1283	2.1469	2.1521	2.1875
		2	0.0000	2.1875	2.1785	—	2.1469	2.1407	2.1108	2	2.1198	2.1278	2.1469	2.1531	2.1875
		3	0.0000	2.1875	2.1785	—	2.1469	2.1426	2.1108	3	2.1198	2.1278	2.1469	2.1512	2.1875
2-1/4 - 4-1/2	UNC	1A	0.0029	2.2471	2.2141	—	2.1028	2.0882	1.9745	1B	2.009	2.045	2.1057	2.1247	2.2500
		2A	0.0029	2.2471	2.2251	2.2141	2.1028	2.0931	1.9745	2B	2.009	2.045	2.1057	2.1183	2.2500
		3A	0.0000	2.2500	2.2280	—	2.1057	2.0984	1.9774	3B	2.0090	2.0361	2.1057	2.1152	2.2500
	NC	2	0.0000	2.2500	2.2246	2.2132	2.1057	2.0930	1.9774	2	2.0094	2.0335	2.1057	2.1184	2.2500
		3	0.0000	2.2500	2.2246	—	2.1057	2.0968	1.9774	3	2.0094	2.0335	2.1057	2.1146	2.2500
2-1/4 - 8	N	2A	0.0024	2.2476	2.2326	2.2251	2.1664	2.1584	2.0942	2B	2.115	2.140	2.1688	2.1792	2.2500
		3A	0.0000	2.2500	2.2350	—	2.1688	2.1628	2.0966	3B	2.1150	2.1297	2.1688	2.1766	2.2500
		2	0.0000	2.2500	2.2348	2.2278	2.1688	2.1578	2.0966	2	2.1147	2.1295	2.1688	2.1798	2.2500
		3	0.0000	2.2500	2.2348	—	2.1688	2.1611	2.0966	3	2.1147	2.1295	2.1688	2.1765	2.2500

a See Figure 1.
b For Class 2A, the maximum is increased by the amount of the allowance if the threads have an additive finish such as plating or coating.
c The juxtaposition of external and internal thread classes in this table does not indicate that they must be used in combination. See Section 4.
d For unfinished hot-rolled material.
e Revised minor diameter limits of Classes 1B and 2B are in process of ratification as Unified standard.

UNIFIED AND AMERICAN SCREW THREADS

TABLE 2 (CONTINUED) LIMITING DIMENSIONS OF STANDARD SERIES THREADS

Nominal Size and Threads Per Inch	Series Designation	EXTERNAL[c]								INTERNAL[c]					
		Class	Allowance	Major Diameter			Pitch Diameter		Minor Dia.[a]	Class	Minor Diameter[e]		Pitch Diameter		Major Dia.
				Max.[b]	Min.	Min.[d]	Max.[b]	Min.			Min.	Max.	Min.	Max.	Min.
2-1/4-12	UN	2A	0.0018	2.2482	2.2368	—	2.1941	2.1880	2.1460	2B	2.160	2.178	2.1959	2.2038	2.2500
		3A	0.0000	2.2500	2.2386	—	2.1959	2.1914	2.1478	3B	2.1600	2.1698	2.1959	2.2018	2.2500
	N	2	0.0000	2.2500	2.2388	—	2.1959	2.1890	2.1478	2	2.1598	2.1688	2.1959	2.2028	2.2500
		3	0.0000	2.2500	2.2388	—	2.1959	2.1911	2.1478	3	2.1598	2.1688	2.1959	2.2007	2.2500
2-1/4-16	UN	2A	0.0016	2.2484	2.2390	—	2.2078	2.2024	2.1717	2B	2.182	2.196	2.2094	2.2164	2.2500
		3A	0.0000	2.2500	2.2406	—	2.2094	2.2054	2.1733	3B	2.1820	2.1908	2.2094	2.2146	2.2500
	N	2	0.0000	2.2500	2.2410	—	2.2094	2.2032	2.1733	2	2.1823	2.1903	2.2094	2.2156	2.2500
		3	0.0000	2.2500	2.2410	—	2.2094	2.2050	2.1733	3	2.1823	2.1903	2.2094	2.2138	2.2500
2-5/16-16	N	2A	0.0017	2.3108	2.3014	—	2.2702	2.2647	2.2341	2B	2.245	2.259	2.2719	2.2791	2.3125
		3A	0.0000	2.3125	2.3031	—	2.2719	2.2678	2.2358	3B	2.2450	2.2533	2.2719	2.2773	2.3125
		2	0.0000	2.3125	2.3035	—	2.2719	2.2656	2.2358	2	2.2448	2.2528	2.2719	2.2782	2.3125
		3	0.0000	2.3125	2.3035	—	2.2719	2.2675	2.2358	3	2.2448	2.2528	2.2719	2.2763	2.3125
2-3/8-12	UN	2A	0.0019	2.3731	2.3617	—	2.3190	2.3128	2.2709	2B	2.285	2.303	2.3209	2.3290	2.3750
		3A	0.0000	2.3750	2.3636	—	2.3209	2.3163	2.2728	3B	2.2850	2.2948	2.3209	2.3269	2.3750
	N	2	0.0000	2.3750	2.3638	—	2.3209	2.3139	2.2728	2	2.2848	2.2938	2.3209	2.3279	2.3750
		3	0.0000	2.3750	2.3638	—	2.3209	2.3160	2.2728	3	2.2848	2.2938	2.3209	2.3258	2.3750
2-3/8-16	UN	2A	0.0017	2.3733	2.3639	—	2.3327	2.3272	2.2966	2B	2.307	2.321	2.3344	2.3416	2.3750
		3A	0.0000	2.3750	2.3656	—	2.3344	2.3303	2.2983	3B	2.3070	2.3158	2.3344	2.3398	2.3750
	N	2	0.0000	2.3750	2.3660	—	2.3344	2.3281	2.2983	2	2.3073	2.3153	2.3344	2.3407	2.3750
		3	0.0000	2.3750	2.3660	—	2.3344	2.3300	2.2983	3	2.3073	2.3153	2.3344	2.3388	2.3750
2-7/16-16	N	2A	0.0017	2.4358	2.4264	—	2.3952	2.3897	2.3591	2B	2.370	2.384	2.3969	2.4041	2.4375
		3A	0.0000	2.4375	2.4281	—	2.3969	2.3928	2.3608	3B	2.3700	2.3783	2.3969	2.4023	2.4375
		2	0.0000	2.4375	2.4285	—	2.3969	2.3905	2.3608	2	2.3698	2.3778	2.3969	2.4033	2.4375
		3	0.0000	2.4375	2.4285	—	2.3969	2.3924	2.3608	3	2.3698	2.3778	2.3969	2.4014	2.4375
2-1/2-4	UNC	1A	0.0031	2.4969	2.4612	—	2.3345	2.3190	2.1902	1B	2.229	2.267	2.3376	2.3578	2.5000
		2A	0.0031	2.4969	2.4731	2.4612	2.3345	2.3241	2.1902	2B	2.229	2.267	2.3376	2.3511	2.5000
		3A	0.0000	2.5000	2.4762	—	2.3376	2.3298	2.1933	3B	2.2290	2.2594	2.3376	2.3477	2.5000
	NC	2	0.0000	2.5000	2.4720	2.4592	2.3376	2.3236	2.1933	2	2.2294	2.2564	2.3376	2.3516	2.5000
		3	0.0000	2.5000	2.4720	—	2.3376	2.3279	2.1933	3	2.2294	2.2564	2.3376	2.3473	2.5000
2-1/2-8	N	2A	0.0024	2.4976	2.4826	2.4751	2.4164	2.4082	2.3442	2B	2.365	2.390	2.4188	2.4294	2.5000
		3A	0.0000	2.5000	2.4850	—	2.4188	2.4127	2.3466	3B	2.3650	2.3797	2.4188	2.4268	2.5000
		2	0.0000	2.5000	2.4848	2.4778	2.4188	2.4071	2.3466	2	2.3647	2.3795	2.4188	2.4305	2.5000
		3	0.0000	2.5000	2.4848	—	2.4188	2.4106	2.3466	3	2.3647	2.3795	2.4188	2.4270	2.5000
2-1/2-12	UN	2A	0.0019	2.4981	2.4867	—	2.4440	2.4378	2.3959	2B	2.410	2.428	2.4459	2.4540	2.5000
		3A	0.0000	2.5000	2.4886	—	2.4459	2.4413	2.3978	3B	2.4100	2.4198	2.4459	2.4519	2.5000
	N	2	0.0000	2.5000	2.4888	—	2.4459	2.4388	2.3978	2	2.4098	2.4188	2.4459	2.4530	2.5000
		3	0.0000	2.5000	2.4888	—	2.4459	2.4410	2.3978	3	2.4098	2.4188	2.4459	2.4508	2.5000

a See Figure 1.
b For Class 2A, the maximum is increased by the amount of the allowance if the threads have an additive finish such as plating or coating.
c The juxtaposition of external and internal thread classes in this table does not indicate that they must be used in combination. See Section 4.
d For unfinished hot-rolled material.
e Revised minor diameter limits of Classes 1B and 2B are in process of ratification as Unified standard.

UNIFIED AND AMERICAN SCREW THREADS

TABLE 2 (CONTINUED) LIMITING DIMENSIONS OF STANDARD SERIES THREADS

Nominal Size and Threads Per Inch	Series Designation	EXTERNAL[c]								INTERNAL[c]					
		Class	Allowance	Major Diameter			Pitch Diameter		Minor Dia.[a]	Class	Minor Diameter[e]		Pitch Diameter		Major Dia.
				Max.[b]	Min.	Min.[d]	Max.[b]	Min.			Min.	Max.	Min.	Max.	Min.
2-1/2-16	UN	2A	0.0017	2.4983	2.4889	—	2.4577	2.4522	2.4216	2B	2.432	2.446	2.4594	2.4666	2.5000
		3A	0.0000	2.5000	2.4906	—	2.4594	2.4553	2.4233	3B	2.4320	2.4408	2.4594	2.4648	2.5000
	N	2	0.0000	2.5000	2.4910	—	2.4594	2.4530	2.4233	2	2.4323	2.4403	2.4594	2.4658	2.5000
		3	0.0000	2.5000	2.4910	—	2.4594	2.4549	2.4233	3	2.4323	2.4403	2.4594	2.4639	2.5000
2-5/8-12	UN	2A	0.0019	2.6231	2.6117	—	2.5690	2.5628	2.5209	2B	2.535	2.553	2.5709	2.5790	2.6250
		3A	0.0000	2.6250	2.6136	—	2.5709	2.5663	2.5228	3B	2.5350	2.5448	2.5709	2.5769	2.6250
	N	2	0.0000	2.6250	2.6138	—	2.5709	2.5638	2.5228	2	2.5348	2.5438	2.5709	2.5780	2.6250
		3	0.0000	2.6250	2.6138	—	2.5709	2.5659	2.5228	3	2.5348	2.5438	2.5709	2.5759	2.6250
2-5/8-16	UN	2A	0.0017	2.6233	2.6139	—	2.5827	2.5772	2.5466	2B	2.557	2.571	2.5844	2.5916	2.6250
		3A	0.0000	2.6250	2.6156	—	2.5844	2.5803	2.5483	3B	2.5570	2.5658	2.5844	2.5898	2.6250
	N	2	0.0000	2.6250	2.6160	—	2.5844	2.5779	2.5483	2	2.5573	2.5653	2.5844	2.5909	2.6250
		3	0.0000	2.6250	2.6160	—	2.5844	2.5799	2.5483	3	2.5573	2.5653	2.5844	2.5889	2.6250
2-3/4-4	UNC	1A	0.0032	2.7468	2.7111	—	2.5844	2.5686	2.4401	1B	2.479	2.517	2.5876	2.6082	2.7500
		2A	0.0032	2.7468	2.7230	2.7111	2.5844	2.5739	2.4401	2B	2.479	2.517	2.5876	2.6013	2.7500
		3A	0.0000	2.7500	2.7262	—	2.5876	2.5797	2.4433	3B	2.4790	2.5094	2.5876	2.5979	2.7500
	NC	2	0.0000	2.7500	2.7220	2.7092	2.5876	2.5736	2.4433	2	2.4794	2.5064	2.5876	2.6016	2.7500
		3	0.0000	2.7500	2.7220	—	2.5876	2.5779	2.4433	3	2.4794	2.5064	2.5876	2.5973	2.7500
2-3/4-8	N	2A	0.0025	2.7475	2.7325	2.7250	2.6663	2.6580	2.5941	2B	2.615	2.640	2.6688	2.6796	2.7500
		3A	0.0000	2.7500	2.7350	—	2.6688	2.6626	2.5966	3B	2.6150	2.6297	2.6688	2.6769	2.7500
		2	0.0000	2.7500	2.7348	2.7278	2.6688	2.6564	2.5966	2	2.6147	2.6295	2.6688	2.6812	2.7500
		3	0.0000	2.7500	2.7348	—	2.6688	2.6601	2.5966	3	2.6147	2.6295	2.6688	2.6775	2.7500
2-3/4-12	UN	2A	0.0019	2.7481	2.7367	—	2.6940	2.6878	2.6459	2B	2.660	2.678	2.6959	2.7040	2.7500
		3A	0.0000	2.7500	2.7386	—	2.6959	2.6913	2.6478	3B	2.6600	2.6698	2.6959	2.7019	2.7500
	N	2	0.0000	2.7500	2.7388	—	2.6959	2.6887	2.6478	2	2.6598	2.6688	2.6959	2.7031	2.7500
		3	0.0000	2.7500	2.7388	—	2.6959	2.6909	2.6478	3	2.6598	2.6688	2.6959	2.7009	2.7500
2-3/4-16	UN	2A	0.0017	2.7483	2.7389	—	2.7077	2.7022	2.6716	2B	2.682	2.696	2.7094	2.7166	2.7500
		3A	0.0000	2.7500	2.7406	—	2.7094	2.7053	2.6733	3B	2.6820	2.6908	2.7094	2.7148	2.7500
	N	2	0.0000	2.7500	2.7410	—	2.7094	2.7028	2.6733	2	2.6823	2.6903	2.7094	2.7160	2.7500
		3	0.0000	2.7500	2.7410	—	2.7094	2.7048	2.6733	3	2.6823	2.6903	2.7094	2.7140	2.7500
2-7/8-12	UN	2A	0.0019	2.8731	2.8617	—	2.8190	2.8127	2.7709	2B	2.785	2.803	2.8209	2.8291	2.8750
		3A	0.0000	2.8750	2.8636	—	2.8209	2.8162	2.7728	3B	2.7850	2.7948	2.8209	2.8271	2.8750
	N	2	0.0000	2.8750	2.8638	—	2.8209	2.8136	2.7728	2	2.7848	2.7938	2.8209	2.8282	2.8750
		3	0.0000	2.8750	2.8638	—	2.8209	2.8158	2.7728	3	2.7848	2.7938	2.8209	2.8260	2.8750
2-7/8-16	UN	2A	0.0017	2.8733	2.8639	—	2.8327	2.8271	2.7966	2B	2.807	2.821	2.8344	2.8417	2.8750
		3A	0.0000	2.8750	2.8656	—	2.8344	2.8302	2.7983	3B	2.8070	2.8158	2.8344	2.8399	2.8750

a See Figure 1.
b For Class 2A, the maximum is increased by the amount of the allowance if the threads have an additive finish such as plating or coating.
c The juxtaposition of external and internal thread classes in this table does not indicate that they must be used in combination. See Section 4.
d For unfinished hot-rolled material.
e Revised minor diameter limits of Classes 1B and 2B are in process of ratification as Unified standard.

UNIFIED AND AMERICAN SCREW THREADS

TABLE 2 (CONTINUED) LIMITING DIMENSIONS OF STANDARD SERIES THREADS

Nominal Size and Threads Per Inch	Series Designation	EXTERNAL[c]								INTERNAL[c]					
		Class	Allowance	Major Diameter			Pitch Diameter		Minor Dia.[a]	Class	Minor Diameter[e]		Pitch Diameter		Major Dia.
				Max.[b]	Min.	Min.[d]	Max.[b]	Min.			Min.	Max.	Min.	Max.	Min.
2-7/8 - 16	N	2	0.0000	2.8750	2.8660	—	2.8344	2.8278	2.7983	2	2.8073	2.8153	2.8344	2.8410	2.8750
		3	0.0000	2.8750	2.8660	—	2.8344	2.8298	2.7983	3	2.8073	2.8153	2.8344	2.8390	2.8750
3 - 4	UNC	1A	0.0032	2.9968	2.9611	—	2.8344	2.8183	2.6901	1B	2.729	2.767	2.8376	2.8585	3.0000
		2A	0.0032	2.9968	2.9730	2.9611	2.8344	2.8237	2.6901	2B	2.729	2.767	2.8376	2.8515	3.0000
		3A	0.0000	3.0000	2.9762	—	2.8376	2.8296	2.6933	3B	2.7290	2.7594	2.8376	2.8480	3.0000
	NC	2	0.0000	3.0000	2.9720	2.9592	2.8376	2.8236	2.6933	2	2.7294	2.7564	2.8376	2.8516	3.0000
		3	0.0000	3.0000	2.9720	—	2.8376	2.8279	2.6933	3	2.7294	2.7564	2.8376	2.8473	3.0000
3 - 8	N	2A	0.0026	2.9974	2.9824	2.9749	2.9162	2.9077	2.8440	2B	2.865	2.890	2.9188	2.9299	3.0000
		3A	0.0000	3.0000	2.9850	—	2.9188	2.9124	2.8466	3B	2.8650	2.8797	2.9188	2.9271	3.0000
		2	0.0000	3.0000	2.9848	2.9778	2.9188	2.9058	2.8466	2	2.8647	2.8795	2.9188	2.9318	3.0000
		3	0.0000	3.0000	2.9848	—	2.9188	2.9096	2.8466	3	2.8647	2.8795	2.9188	2.9280	3.0000
3 - 12	UN	2A	0.0019	2.9981	2.9867	—	2.9440	2.9377	2.8959	2B	2.910	2.928	2.9459	2.9541	3.0000
		3A	0.0000	3.0000	2.9886	—	2.9459	2.9412	2.8978	3B	2.9100	2.9198	2.9459	2.9521	3.0000
	N	2	0.0000	3.0000	2.9888	—	2.9459	2.9385	2.8978	2	2.9098	2.9188	2.9459	2.9533	3.0000
		3	0.0000	3.0000	2.9888	—	2.9459	2.9408	2.8978	3	2.9098	2.9188	2.9459	2.9510	3.0000
3 - 16	UN	2A	0.0017	2.9983	2.9889	—	2.9577	2.9521	2.9216	2B	2.932	2.946	2.9594	2.9667	3.0000
		3A	0.0000	3.0000	2.9906	—	2.9594	2.9552	2.9233	3B	2.9320	2.9408	2.9594	2.9649	3.0000
	N	2	0.0000	3.0000	2.9910	—	2.9594	2.9527	2.9233	2	2.9323	2.9403	2.9594	2.9661	3.0000
		3	0.0000	3.0000	2.9910	—	2.9594	2.9547	2.9233	3	2.9323	2.9403	2.9594	2.9641	3.0000
3-1/8 - 12	UN	2A	0.0019	3.1231	3.1117	—	3.0690	3.0627	3.0209	2B	3.035	3.053	3.0709	3.0791	3.1250
		3A	0.0000	3.1250	3.1136	—	3.0709	3.0662	3.0228	3B	3.0350	3.0448	3.0709	3.0771	3.1250
	N	2	0.0000	3.1250	3.1138	—	3.0709	3.0635	3.0228	2	3.0348	3.0438	3.0709	3.0783	3.1250
		3	0.0000	3.1250	3.1138	—	3.0709	3.0657	3.0228	3	3.0348	3.0438	3.0709	3.0761	3.1250
3-1/8 - 16	UN	2A	0.0017	3.1233	3.1139	—	3.0827	3.0771	3.0466	2B	3.057	3.071	3.0844	3.0917	3.1250
		3A	0.0000	3.1250	3.1156	—	3.0844	3.0802	3.0483	3B	3.0570	3.0658	3.0844	3.0899	3.1250
	N	2	0.0000	3.1250	3.1160	—	3.0844	3.0776	3.0483	2	3.0573	3.0653	3.0844	3.0912	3.1250
		3	0.0000	3.1250	3.1160	—	3.0844	3.0797	3.0483	3	3.0573	3.0653	3.0844	3.0891	3.1250
3-1/4 - 4	UNC	1A	0.0033	3.2467	3.2110	—	3.0843	3.0680	2.9400	1B	2.979	3.017	3.0876	3.1088	3.2500
		2A	0.0033	3.2467	3.2229	3.2110	3.0843	3.0734	2.9400	2B	2.979	3.017	3.0876	3.1017	3.2500
		3A	0.0000	3.2500	3.2262	—	3.0876	3.0794	2.9433	3B	2.9790	3.0094	3.0876	3.0982	3.2500
	NC	2	0.0000	3.2500	3.2220	3.2092	3.0876	3.0736	2.9433	2	2.9794	3.0064	3.0876	3.1016	3.2500
		3	0.0000	3.2500	3.2220	—	3.0876	3.0779	2.9433	3	2.9794	3.0064	3.0876	3.0973	3.2500
3-1/4 - 8	N	2A	0.0026	3.2474	3.2324	3.2249	3.1662	3.1575	3.0940	2B	3.115	3.140	3.1688	3.1801	3.2500
		3A	0.0000	3.2500	3.2350	—	3.1688	3.1623	3.0966	3B	3.1150	3.1297	3.1688	3.1772	3.2500
		2	0.0000	3.2500	3.2348	3.2278	3.1688	3.1556	3.0966	2	3.1147	3.1295	3.1688	3.1820	3.2500
		3	0.0000	3.2500	3.2348	—	3.1688	3.1595	3.0966	3	3.1147	3.1295	3.1688	3.1781	3.2500

a See Figure 1.
b For Class 2A, the maximum is increased by the amount of the allowance if the threads have an additive finish such as plating or coating.
c The juxtaposition of external and internal thread classes in this table does not indicate that they must be used in combination. See Section 4.
d For unfinished hot-rolled material.
e Revised minor diameter limits of Classes 1B and 2B are in process of ratification as Unified standard.

UNIFIED AND AMERICAN SCREW THREADS

TABLE 2 (CONTINUED) LIMITING DIMENSIONS OF STANDARD SERIES THREADS

Nominal Size and Threads Per Inch	Series Designation	EXTERNAL[c]								INTERNAL[c]					
		Class	Allowance	Major Diameter			Pitch Diameter		Minor Dia.[a]	Class	Minor Diameter[e]		Pitch Diameter		Major Dia.
				Max.[b]	Min.	Min.[d]	Max.[b]	Min.			Min.	Max.	Min.	Max.	Min.
3-1/4 - 12	UN	2A	0.0019	3.2481	3.2367	—	3.1940	3.1877	3.1459	2B	3.160	3.178	3.1959	3.2041	3.2500
		3A	0.0000	3.2500	3.2386	—	3.1959	3.1912	3.1478	3B	3.1600	3.1698	3.1959	3.2021	3.2500
	N	2	0.0000	3.2500	3.2388	—	3.1959	3.1884	3.1478	2	3.1598	3.1688	3.1959	3.2034	3.2500
		3	0.0000	3.2500	3.2388	—	3.1959	3.1907	3.1478	3	3.1598	3.1688	3.1959	3.2011	3.2500
3-1/4 - 16	UN	2A	0.0017	3.2483	3.2389	—	3.2077	3.2021	3.1716	2B	3.182	3.196	3.2094	3.2167	3.2500
		3A	0.0000	3.2500	3.2406	—	3.2094	3.2052	3.1733	3B	3.1820	3.1908	3.2094	3.2149	3.2500
	N	2	0.0000	3.2500	3.2410	—	3.2094	3.2025	3.1733	2	3.1823	3.1903	3.2094	3.2163	3.2500
		3	0.0000	3.2500	3.2410	—	3.2094	3.2046	3.1733	3	3.1823	3.1903	3.2094	3.2142	3.2500
3-3/8 - 12	UN	2A	0.0019	3.3731	3.3617	—	3.3190	3.3126	3.2709	2B	3.285	3.303	3.3209	3.3293	3.3750
		3A	0.0000	3.3750	3.3636	—	3.3209	3.3161	3.2728	3B	3.2850	3.2948	3.3209	3.3272	3.3750
	N	2	0.0000	3.3750	3.3638	—	3.3209	3.3133	3.2728	2	3.2848	3.2938	3.3209	3.3285	3.3750
		3	0.0000	3.3750	3.3638	—	3.3209	3.3156	3.2728	3	3.2848	3.2938	3.3209	3.3262	3.3750
3-3/8 - 16	UN	2A	0.0017	3.3733	3.3639	—	3.3327	3.3269	3.2966	2B	3.307	3.321	3.3344	3.3419	3.3750
		3A	0.0000	3.3750	3.3656	—	3.3344	3.3301	3.2983	3B	3.3070	3.3158	3.3344	3.3400	3.3750
	N	2	0.0000	3.3750	3.3660	—	3.3344	3.3275	3.2983	2	3.3073	3.3153	3.3344	3.3413	3.3750
		3	0.0000	3.3750	3.3660	—	3.3344	3.3296	3.2983	3	3.3073	3.3153	3.3344	3.3392	3.3750
3-1/2 - 4	UNC	1A	0.0033	3.4967	3.4610	—	3.3343	3.3177	3.1900	1B	3.229	3.267	3.3376	3.3591	3.5000
		2A	0.0033	3.4967	3.4729	3.4610	3.3343	3.3233	3.1900	2B	3.229	3.267	3.3376	3.3519	3.5000
		3A	0.0000	3.5000	3.4762	—	3.3376	3.3293	3.1933	3B	3.2290	3.2594	3.3376	3.3484	3.5000
	NC	2	0.0000	3.5000	3.4720	3.4592	3.3376	3.3236	3.1933	2	3.2294	3.2564	3.3376	3.3516	3.5000
		3	0.0000	3.5000	3.4720	—	3.3376	3.3279	3.1933	3	3.2294	3.2564	3.3376	3.3473	3.5000
3-1/2 - 8	N	2A	0.0026	3.4974	3.4824	3.4749	3.4162	3.4074	3.3440	2B	3.365	3.390	3.4188	3.4303	3.5000
		3A	0.0000	3.5000	3.4850	—	3.4188	3.4122	3.3466	3B	3.3650	3.3797	3.4188	3.4274	3.5000
		2	0.0000	3.5000	3.4848	3.4778	3.4188	3.4055	3.3466	2	3.3647	3.3795	3.4188	3.4321	3.5000
		3	0.0000	3.5000	3.4848	—	3.4188	3.4095	3.3466	3	3.3647	3.3795	3.4188	3.4281	3.5000
3-1/2 - 12	UN	2A	0.0019	3.4981	3.4867	—	3.4440	3.4376	3.3959	2B	3.410	3.428	3.4459	3.4543	3.5000
		3A	0.0000	3.5000	3.4886	—	3.4459	3.4411	3.3978	3B	3.4100	3.4198	3.4459	3.4522	3.5000
	N	2	0.0000	3.5000	3.4888	—	3.4459	3.4383	3.3978	2	3.4098	3.4188	3.4459	3.4535	3.5000
		3	0.0000	3.5000	3.4888	—	3.4459	3.4406	3.3978	3	3.4098	3.4188	3.4459	3.4512	3.5000
3-1/2 - 16	UN	2A	0.0017	3.4983	3.4889	—	3.4577	3.4519	3.4216	2B	3.432	3.446	3.4594	3.4669	3.5000
		3A	0.0000	3.5000	3.4906	—	3.4594	3.4551	3.4233	3B	3.4320	3.4408	3.4594	3.4650	3.5000
	N	2	0.0000	3.5000	3.4910	—	3.4594	3.4524	3.4233	2	3.4323	3.4403	3.4594	3.4664	3.5000
		3	0.0000	3.5000	3.4910	—	3.4594	3.4545	3.4233	3	3.4323	3.4403	3.4594	3.4643	3.5000
3-5/8 - 12	UN	2A	0.0019	3.6231	3.6117	—	3.5690	3.5626	3.5209	2B	3.535	3.553	3.5709	3.5793	3.6250
		3A	0.0000	3.6250	3.6136	—	3.5709	3.5661	3.5228	3B	3.5350	3.5448	3.5709	3.5772	3.6250

a See Figure 1.
b For Class 2A, the maximum is increased by the amount of the allowance if the threads have an additive finish such as plating or coating.
c The juxtaposition of external and internal thread classes in this table does not indicate that they must be used in combination. See Section 4.
d For unfinished hot-rolled material.
e Revised minor diameter limits of Classes 1B and 2B are in process of ratification as Unified standard.

UNIFIED AND AMERICAN SCREW THREADS

TABLE 2 (CONTINUED) LIMITING DIMENSIONS OF STANDARD SERIES THREADS

Nominal Size and Threads Per Inch	Series Designation	EXTERNAL[c]								INTERNAL[c]					
		Class	Allowance	Major Diameter			Pitch Diameter		Minor Dia.[a]	Class	Minor Diameter[e]		Pitch Diameter		Major Dia.
				Max.[b]	Min.	Min.[d]	Max.[b]	Min.			Min.	Max.	Min.	Max.	Min.
3-5/8-12	N	2	0.0000	3.6250	3.6138	—	3.5709	3.5632	3.5228	2	3.5348	3.5438	3.5709	3.5786	3.6250
		3	0.0000	3.6250	3.6138	—	3.5709	3.5655	3.5228	3	3.5348	3.5438	3.5709	3.5763	3.6250
3-5/8-16	UN	2A	0.0017	3.6233	3.6139	—	3.5827	3.5769	3.5466	2B	3.557	3.571	3.5844	3.5919	3.6250
		3A	0.0000	3.6250	3.6156	—	3.5844	3.5801	3.5483	3B	3.5570	3.5658	3.5844	3.5900	3.6250
	N	2	0.0000	3.6250	3.6160	—	3.5844	3.5773	3.5483	2	3.5573	3.5653	3.5844	3.5915	3.6250
		3	0.0000	3.6250	3.6160	—	3.5844	3.5795	3.5483	3	3.5573	3.5653	3.5844	3.5893	3.6250
3-3/4-4	UNC	1A	0.0034	3.7466	3.7109	—	3.5842	3.5674	3.4399	1B	3.479	3.517	3.5876	3.6094	3.7500
		2A	0.0034	3.7466	3.7228	3.7109	3.5842	3.5730	3.4399	2B	3.479	3.517	3.5876	3.6021	3.7500
		3A	0.0000	3.7500	3.7262	—	3.5876	3.5792	3.4433	3B	3.4790	3.5094	3.5876	3.5985	3.7500
	NC	2	0.0000	3.7500	3.7220	3.7092	3.5876	3.5736	3.4433	2	3.4794	3.5064	3.5876	3.6016	3.7500
		3	0.0000	3.7500	3.7220	—	3.5876	3.5779	3.4433	3	3.4794	3.5064	3.5876	3.5973	3.7500
3-3/4-8	N	2A	0.0027	3.7473	3.7323	3.7248	3.6661	3.6571	3.5939	2B	3.615	3.640	3.6688	3.6805	3.7500
		3A	0.0000	3.7500	3.7350	—	3.6688	3.6621	3.5966	3B	3.6150	3.6297	3.6688	3.6776	3.7500
		2	0.0000	3.7500	3.7348	3.7278	3.6688	3.6554	3.5966	2	3.6147	3.6295	3.6688	3.6822	3.7500
		3	0.0000	3.7500	3.7348	—	3.6688	3.6594	3.5966	3	3.6147	3.6295	3.6688	3.6782	3.7500
3-3/4-12	UN	2A	0.0019	3.7481	3.7367	—	3.6940	3.6876	3.6459	2B	3.660	3.678	3.6959	3.7043	3.7500
		3A	0.0000	3.7500	3.7386	—	3.6959	3.6911	3.6478	3B	3.6600	3.6698	3.6959	3.7022	3.7500
	N	2	0.0000	3.7500	3.7388	—	3.6959	3.6881	3.6478	2	3.6598	3.6688	3.6959	3.7037	3.7500
		3	0.0000	3.7500	3.7388	—	3.6959	3.6905	3.6478	3	3.6598	3.6688	3.6959	3.7013	3.7500
3-3/4-16	UN	2A	0.0017	3.7483	3.7389	—	3.7077	3.7019	3.6716	2B	3.682	3.696	3.7094	3.7169	3.7500
		3A	0.0000	3.7500	3.7406	—	3.7094	3.7051	3.6733	3B	3.6820	3.6908	3.7094	3.7150	3.7500
	N	2	0.0000	3.7500	3.7410	—	3.7094	3.7023	3.6733	2	3.6823	3.6903	3.7094	3.7165	3.7500
		3	0.0000	3.7500	3.7410	—	3.7094	3.7044	3.6733	3	3.6823	3.6903	3.7094	3.7144	3.7500
3-7/8-12	UN	2A	0.0020	3.8730	3.8616	—	3.8189	3.8124	3.7708	2B	3.785	3.803	3.8209	3.8294	3.8750
		3A	0.0000	3.8750	3.8636	—	3.8209	3.8160	3.7728	3B	3.7850	3.7948	3.8209	3.8273	3.8750
	N	2	0.0000	3.8750	3.8638	—	3.8209	3.8131	3.7728	2	3.7848	3.7938	3.8209	3.8287	3.8750
		3	0.0000	3.8750	3.8638	—	3.8209	3.8154	3.7728	3	3.7848	3.7938	3.8209	3.8264	3.8750
3-7/8-16	UN	2A	0.0018	3.8732	3.8638	—	3.8326	3.8267	3.7965	2B	3.807	3.821	3.8344	3.8420	3.8750
		3A	0.0000	3.8750	3.8656	—	3.8344	3.8300	3.7983	3B	3.8070	3.8158	3.8344	3.8401	3.8750
	N	2	0.0000	3.8750	3.8660	—	3.8344	3.8272	3.7983	2	3.8073	3.8153	3.8344	3.8416	3.8750
		3	0.0000	3.8750	3.8660	—	3.8344	3.8294	3.7983	3	3.8073	3.8153	3.8344	3.8394	3.8750
4-4	UNC	1A	0.0034	3.9966	3.9609	—	3.8342	3.8172	3.6899	1B	3.729	3.767	3.8376	3.8597	4.0000
		2A	0.0034	3.9966	3.9728	3.9609	3.8342	3.8229	3.6899	2B	3.729	3.767	3.8376	3.8523	4.0000
		3A	0.0000	4.0000	3.9762	—	3.8376	3.8291	3.6933	3B	3.7290	3.7594	3.8376	3.8487	4.0000
	NC	2	0.0000	4.0000	3.9720	3.9592	3.8376	3.8236	3.6933	2	3.7294	3.7564	3.8376	3.8516	4.0000
		3	0.0000	4.0000	3.9720	—	3.8376	3.8279	3.6933	3	3.7294	3.7564	3.8376	3.8473	4.0000

a See Figure 1.
b For Class 2A, the maximum is increased by the amount of the allowance if the threads have an additive finish such as plating or coating.
c The juxtaposition of external and internal thread classes in this table does not indicate that they must be used in combination. See Section 4.
d For unfinished hot-rolled material.
e Revised minor diameter limits of Classes 1B and 2B are in process of ratification as Unified standard.

UNIFIED AND AMERICAN SCREW THREADS

TABLE 2 (CONTINUED) LIMITING DIMENSIONS OF STANDARD SERIES THREADS

Nominal Size and Threads Per Inch	Series Designation	EXTERNAL[c]								INTERNAL[c]					
		Class	Allowance	Major Diameter			Pitch Diameter		Minor Dia.[a]	Class	Minor Diameter[e]		Pitch Diameter		Major Dia.
				Max.[b]	Min.	Min.[d]	Max.[b]	Min.			Min.	Max.	Min.	Max.	Min.
4 - 8	N	2A	0.0027	3.9973	3.9823	3.9748	3.9161	3.9070	3.8439	2B	3.865	3.890	3.9188	3.9307	4.0000
		3A	0.0000	4.0000	3.9850	—	3.9188	3.9120	3.8466	3B	3.8650	3.8797	3.9188	3.9277	4.0000
		2	0.0000	4.0000	3.9848	3.9778	3.9188	3.9053	3.8466	2	3.8647	3.8795	3.9188	3.9323	4.0000
		3	0.0000	4.0000	3.9848	—	3.9188	3.9093	3.8466	3	3.8647	3.8795	3.9188	3.9283	4.0000
4 - 12	UN	2A	0.0020	3.9980	3.9866	—	3.9439	3.9374	3.8958	2B	3.910	3.928	3.9459	3.9544	4.0000
		3A	0.0000	4.0000	3.9886	—	3.9459	3.9410	3.8978	3B	3.9100	3.9198	3.9459	3.9523	4.0000
	N	2	0.0000	4.0000	3.9888	—	3.9459	3.9380	3.8978	2	3.9098	3.9188	3.9459	3.9538	4.0000
		3	0.0000	4.0000	3.9888	—	3.9459	3.9404	3.8978	3	3.9098	3.9188	3.9459	3.9514	4.0000
4 - 16	UN	2A	0.0018	3.9982	3.9888	—	3.9576	3.9517	3.9215	2B	3.932	3.946	3.9594	3.9670	4.0000
		3A	0.0000	4.0000	3.9906	—	3.9594	3.9550	3.9233	3B	3.9320	3.9408	3.9594	3.9651	4.0000
	N	2	0.0000	4.0000	3.9910	—	3.9594	3.9522	3.9233	2	3.9323	3.9403	3.9594	3.9666	4.0000
		3	0.0000	4.0000	3.9910	—	3.9594	3.9543	3.9233	3	3.9323	3.9403	3.9594	3.9645	4.0000
4-1/4 - 8	N	2A	0.0028	4.2472	4.2322	4.2247	4.1660	4.1567	4.0938	2B	4.115	4.140	4.1688	4.1809	4.2500
		3A	0.0000	4.2500	4.2350	—	4.1688	4.1618	4.0966	3B	4.1150	4.1297	4.1688	4.1778	4.2500
		2	0.0000	4.2500	4.2348	4.2278	4.1688	4.1551	4.0966	2	4.1147	4.1295	4.1688	4.1825	4.2500
		3	0.0000	4.2500	4.2348	—	4.1688	4.1592	4.0966	3	4.1147	4.1295	4.1688	4.1784	4.2500
4-1/4 - 12	UN	2A	0.0020	4.2480	4.2366	—	4.1939	4.1874	4.1458	2B	4.160	4.178	4.1959	4.2044	4.2500
		3A	0.0000	4.2500	4.2386	—	4.1959	4.1910	4.1478	3B	4.1600	4.1698	4.1959	4.2023	4.2500
	N	2	0.0000	4.2500	4.2388	—	4.1959	4.1879	4.1478	2	4.1598	4.1688	4.1959	4.2039	4.2500
		3	0.0000	4.2500	4.2388	—	4.1959	4.1903	4.1478	3	4.1598	4.1688	4.1959	4.2015	4.2500
4-1/4 - 16	UN	2A	0.0018	4.2482	4.2388	—	4.2076	4.2017	4.1715	2B	4.182	4.196	4.2094	4.2170	4.2500
		3A	0.0000	4.2500	4.2406	—	4.2094	4.2050	4.1733	3B	4.1820	4.1908	4.2094	4.2151	4.2500
	N	2	0.0000	4.2500	4.2410	—	4.2094	4.2020	4.1733	2	4.1823	4.1903	4.2094	4.2168	4.2500
		3	0.0000	4.2500	4.2410	—	4.2094	4.2042	4.1733	3	4.1823	4.1903	4.2094	4.2146	4.2500
4-1/2 - 8	N	2A	0.0028	4.4972	4.4822	4.4747	4.4160	4.4066	4.3438	2B	4.365	4.390	4.4188	4.4310	4.5000
		3A	0.0000	4.5000	4.4850	—	4.4188	4.4117	4.3466	3B	4.3650	4.3797	4.4188	4.4280	4.5000
		2	0.0000	4.5000	4.4848	4.4778	4.4188	4.4050	4.3466	2	4.3647	4.3795	4.4188	4.4326	4.5000
		3	0.0000	4.5000	4.4848	—	4.4188	4.4091	4.3466	3	4.3647	4.3795	4.4188	4.4285	4.5000
4-1/2 - 12	UN	2A	0.0020	4.4980	4.4866	—	4.4439	4.4374	4.3958	2B	4.410	4.428	4.4459	4.4544	4.5000
		3A	0.0000	4.5000	4.4886	—	4.4459	4.4410	4.3978	3B	4.4100	4.4198	4.4459	4.4523	4.5000
	N	2	0.0000	4.5000	4.4888	—	4.4459	4.4378	4.3978	2	4.4098	4.4188	4.4459	4.4540	4.5000
		3	0.0000	4.5000	4.4888	—	4.4459	4.4402	4.3978	3	4.4098	4.4188	4.4459	4.4516	4.5000
4-1/2 - 16	UN	2A	0.0018	4.4982	4.4888	—	4.4576	4.4517	4.4215	2B	4.432	4.446	4.4594	4.4670	4.5000
		3A	0.0000	4.5000	4.4906	—	4.4594	4.4550	4.4233	3B	4.4320	4.4408	4.4594	4.4651	4.5000
	N	2	0.0000	4.5000	4.4910	—	4.4594	4.4519	4.4233	2	4.4323	4.4403	4.4594	4.4669	4.5000
		3	0.0000	4.5000	4.4910	—	4.4594	4.4541	4.4233	3	4.4323	4.4403	4.4594	4.4647	4.5000

a See Figure 1.
b For Class 2A, the maximum is increased by the amount of the allowance if the threads have an additive finish such as plating or coating.
c The juxtaposition of external and internal thread classes in this table does not indicate that they must be used in combination. See Section 4.
d For unfinished hot-rolled material.
e Revised minor diameter limits of Classes 1B and 2B are in process of ratification as Unified standard.

UNIFIED AND AMERICAN SCREW THREADS

TABLE 2 (CONTINUED) LIMITING DIMENSIONS OF STANDARD SERIES THREADS

Nominal Size and Threads Per Inch	Series Designation	EXTERNAL[c]								INTERNAL[c]					
		Class	Allowance	Major Diameter			Pitch Diameter		Minor Dia.[a]	Class	Minor Diameter[e]		Pitch Diameter		Major Dia.
				Max.[b]	Min.	Min.[d]	Max.[b]	Min.			Min.	Max.	Min.	Max.	Min.
4-3/4 - 8	N	2A	0.0029	4.7471	4.7321	4.7246	4.6659	4.6564	4.5937	2B	4.615	4.640	4.6688	4.6812	4.7500
		3A	0.0000	4.7500	4.7350	—	4.6688	4.6616	4.5966	3B	4.6150	4.6297	4.6688	4.6781	4.7500
		2	0.0000	4.7500	4.7348	4.7278	4.6688	4.6549	4.5966	2	4.6147	4.6295	4.6688	4.6827	4.7500
		3	0.0000	4.7500	4.7348	—	4.6688	4.6590	4.5966	3	4.6147	4.6295	4.6688	4.6786	4.7500
4-3/4 - 12	UN	2A	0.0020	4.7480	4.7366	—	4.6939	4.6872	4.6458	2B	4.660	4.678	4.6959	4.7046	4.7500
		3A	0.0000	4.7500	4.7386	—	4.6959	4.6909	4.6478	3B	4.6600	4.6698	4.6959	4.7025	4.7500
	N	2	0.0000	4.7500	4.7388	—	4.6959	4.6876	4.6478	2	4.6598	4.6688	4.6959	4.7042	4.7500
		3	0.0000	4.7500	4.7388	—	4.6959	4.6901	4.6478	3	4.6598	4.6688	4.6959	4.7017	4.7500
4-3/4 - 16	UN	2A	0.0018	4.7482	4.7388	—	4.7076	4.7015	4.6715	2B	4.682	4.696	4.7094	4.7173	4.7500
		3A	0.0000	4.7500	4.7406	—	4.7094	4.7049	4.6733	3B	4.6820	4.6908	4.7094	4.7153	4.7500
	N	2	0.0000	4.7500	4.7410	—	4.7094	4.7018	4.6733	2	4.6823	4.6903	4.7094	4.7170	4.7500
		3	0.0000	4.7500	4.7410	—	4.7094	4.7041	4.6733	3	4.6823	4.6903	4.7094	4.7147	4.7500
5 - 8	N	2A	0.0029	4.9971	4.9821	4.9746	4.9159	4.9062	4.8437	2B	4.865	4.890	4.9188	4.9314	5.0000
		3A	0.0000	5.0000	4.9850	—	4.9188	4.9116	4.8466	3B	4.8650	4.8797	4.9188	4.9282	5.0000
		2	0.0000	5.0000	4.9848	4.9778	4.9188	4.9048	4.8466	2	4.8647	4.8795	4.9188	4.9328	5.0000
		3	0.0000	5.0000	4.9848	—	4.9188	4.9089	4.8466	3	4.8647	4.8795	4.9188	4.9287	5.0000
5 - 12	UN	2A	0.0020	4.9980	4.9866	—	4.9439	4.9372	4.8958	2B	4.910	4.928	4.9459	4.9546	5.0000
		3A	0.0000	5.0000	4.9886	—	4.9459	4.9409	4.8978	3B	4.9100	4.9198	4.9459	4.9525	5.0000
	N	2	0.0000	5.0000	4.9888	—	4.9459	4.9375	4.8978	2	4.9098	4.9188	4.9459	4.9543	5.0000
		3	0.0000	5.0000	4.9888	—	4.9459	4.9400	4.8978	3	4.9098	4.9188	4.9459	4.9518	5.0000
5 - 16	UN	2A	0.0018	4.9982	4.9888	—	4.9576	4.9515	4.9215	2B	4.932	4.946	4.9594	4.9673	5.0000
		3A	0.0000	5.0000	4.9906	—	4.9594	4.9549	4.9233	3B	4.9320	4.9408	4.9594	4.9653	5.0000
	N	2	0.0000	5.0000	4.9910	—	4.9594	4.9517	4.9233	2	4.9323	4.9403	4.9594	4.9671	5.0000
		3	0.0000	5.0000	4.9910	—	4.9594	4.9540	4.9233	3	4.9323	4.9403	4.9594	4.9648	5.0000
5-1/4 - 8	N	2A	0.0029	5.2471	5.2321	5.2246	5.1659	5.1561	5.0937	2B	5.115	5.140	5.1688	5.1815	5.2500
		3A	0.0000	5.2500	5.2350	—	5.1688	5.1615	5.0966	3B	5.1150	5.1297	5.1688	5.1783	5.2500
		2	0.0000	5.2500	5.2348	5.2278	5.1688	5.1547	5.0966	2	5.1147	5.1295	5.1688	5.1829	5.2500
		3	0.0000	5.2500	5.2348	—	5.1688	5.1589	5.0966	3	5.1147	5.1295	5.1688	5.1787	5.2500
5-1/4 - 12	UN	2A	0.0020	5.2480	5.2366	—	5.1939	5.1872	5.1458	2B	5.160	5.178	5.1959	5.2046	5.2500
		3A	0.0000	5.2500	5.2386	—	5.1959	5.1909	5.1478	3B	5.1600	5.1698	5.1959	5.2025	5.2500
	N	2	0.0000	5.2500	5.2388	—	5.1959	5.1874	5.1478	2	5.1598	5.1688	5.1959	5.2044	5.2500
		3	0.0000	5.2500	5.2388	—	5.1959	5.1900	5.1478	3	5.1598	5.1688	5.1959	5.2018	5.2500
5-1/4 - 16	UN	2A	0.0018	5.2482	5.2388	—	5.2076	5.2015	5.1715	2B	5.182	5.196	5.2094	5.2173	5.2500
		3A	0.0000	5.2500	5.2406	—	5.2094	5.2049	5.1733	3B	5.1820	5.1908	5.2094	5.2153	5.2500
	N	2	0.0000	5.2500	5.2410	—	5.2094	5.2016	5.1733	2	5.1823	5.1903	5.2094	5.2172	5.2500
		3	0.0000	5.2500	5.2410	—	5.2094	5.2039	5.1733	3	5.1823	5.1903	5.2094	5.2149	5.2500

a See Figure 1.
b For Class 2A, the maximum is increased by the amount of the allowance if the threads have an additive finish such as plating or coating.
c The juxtaposition of external and internal thread classes in this table does not indicate that they must be used in combination. See Section 4.
d For unfinished hot-rolled material.
e Revised minor diameter limits of Classes 1B and 2B are in process of ratification as Unified standard.

UNIFIED AND AMERICAN SCREW THREADS

TABLE 2 (CONTINUED) LIMITING DIMENSIONS OF STANDARD SERIES THREADS

Nominal Size and Threads Per Inch	Series Designation	EXTERNAL[c]								INTERNAL[c]					
		Class	Allowance	Major Diameter			Pitch Diameter		Minor Dia.[a]	Class	Minor Diameter[e]		Pitch Diameter		Major Dia.
				Max.[b]	Min.	Min.[d]	Max.[b]	Min.			Min.	Max.	Min.	Max.	Min.
5-1/2 - 8	N	2A	0.0030	5.4970	5.4820	5.4745	5.4158	5.4059	5.3436	2B	5.365	5.390	5.4188	5.4317	5.5000
		3A	0.0000	5.5000	5.4850	—	5.4188	5.4114	5.3466	3B	5.3650	5.3797	5.4188	5.4285	5.5000
		2	0.0000	5.5000	5.4848	5.4778	5.4188	5.4046	5.3466	2	5.3647	5.3795	5.4188	5.4330	5.5000
		3	0.0000	5.5000	5.4848	—	5.4188	5.4088	5.3466	3	5.3647	5.3795	5.4188	5.4288	5.5000
5-1/2 - 12	UN	2A	0.0020	5.4980	5.4866	—	5.4439	5.4372	5.3958	2B	5.410	5.428	5.4459	5.4546	5.5000
		3A	0.0000	5.5000	5.4886	—	5.4459	5.4409	5.3978	3B	5.4100	5.4198	5.4459	5.4525	5.5000
	N	2	0.0000	5.5000	5.4888	—	5.4459	5.4373	5.3978	2	5.4098	5.4188	5.4459	5.4545	5.5000
		3	0.0000	5.5000	5.4888	—	5.4459	5.4399	5.3978	3	5.4098	5.4188	5.4459	5.4519	5.5000
5-1/2 - 16	UN	2A	0.0018	5.4982	5.4888	—	5.4576	5.4515	5.4215	2B	5.432	5.446	5.4594	5.4673	5.5000
		3A	0.0000	5.5000	5.4906	—	5.4594	5.4549	5.4233	3B	5.4320	5.4408	5.4594	5.4653	5.5000
	N	2	0.0000	5.5000	5.4910	—	5.4594	5.4515	5.4233	2	5.4323	5.4403	5.4594	5.4673	5.5000
		3	0.0000	5.5000	5.4910	—	5.4594	5.4538	5.4233	3	5.4323	5.4403	5.4594	5.4650	5.5000
5-3/4 - 8	N	2A	0.0030	5.7470	5.7320	5.7245	5.6658	5.6558	5.5936	2B	5.615	5.640	5.6688	5.6818	5.7500
		3A	0.0000	5.7500	5.7350	—	5.6688	5.6613	5.5966	3B	5.6150	5.6297	5.6688	5.6786	5.7500
		2	0.0000	5.7500	5.7348	5.7278	5.6688	5.6545	5.5966	2	5.6147	5.6295	5.6688	5.6831	5.7500
		3	0.0000	5.7500	5.7348	—	5.6688	5.6587	5.5966	3	5.6147	5.6295	5.6688	5.6789	5.7500
5-3/4 - 12	UN	2A	0.0021	5.7479	5.7365	—	5.6938	5.6869	5.6457	2B	5.660	5.678	5.6959	5.7049	5.7500
		3A	0.0000	5.7500	5.7386	—	5.6959	5.6907	5.6478	3B	5.6600	5.6698	5.6959	5.7026	5.7500
	N	2	0.0000	5.7500	5.7388	—	5.6959	5.6872	5.6478	2	5.6598	5.6688	5.6959	5.7046	5.7500
		3	0.0000	5.7500	5.7388	—	5.6959	5.6898	5.6478	3	5.6598	5.6688	5.6959	5.7020	5.7500
5-3/4 - 16	UN	2A	0.0019	5.7481	5.7387	—	5.7075	5.7013	5.6714	2B	5.682	5.696	5.7094	5.7175	5.7500
		3A	0.0000	5.7500	5.7406	—	5.7094	5.7047	5.6733	3B	5.6820	5.6908	5.7094	5.7155	5.7500
	N	2	0.0000	5.7500	5.7410	—	5.7094	5.7014	5.6733	2	5.6823	5.6903	5.7094	5.7174	5.7500
		3	0.0000	5.7500	5.7410	—	5.7094	5.7038	5.6733	3	5.6823	5.6903	5.7094	5.7150	5.7500
6 - 8	N	2A	0.0030	5.9970	5.9820	5.9745	5.9158	5.9056	5.8436	2B	5.865	5.890	5.9188	5.9320	6.0000
		3A	0.0000	6.0000	5.9850	—	5.9188	5.9112	5.8466	3B	5.8650	5.8797	5.9188	5.9287	6.0000
		2	0.0000	6.0000	5.9848	5.9778	5.9188	5.9044	5.8466	2	5.8647	5.8795	5.9188	5.9332	6.0000
		3	0.0000	6.0000	5.9848	—	5.9188	5.9086	5.8466	3	5.8647	5.8795	5.9188	5.9290	6.0000
6 - 12	UN	2A	0.0021	5.9979	5.9865	—	5.9438	5.9369	5.8957	2B	5.910	5.928	5.9459	5.9549	6.0000
		3A	0.0000	6.0000	5.9886	—	5.9459	5.9407	5.8978	3B	5.9100	5.9198	5.9459	5.9526	6.0000
	N	2	0.0000	6.0000	5.9888	—	5.9459	5.9371	5.8978	2	5.9098	5.9188	5.9459	5.9547	6.0000
		3	0.0000	6.0000	5.9888	—	5.9459	5.9397	5.8978	3	5.9098	5.9188	5.9459	5.9521	6.0000
6 - 16	UN	2A	0.0019	5.9981	5.9887	—	5.9575	5.9513	5.9214	2B	5.932	5.946	5.9594	5.9675	6.0000
		3A	0.0000	6.0000	5.9906	—	5.9594	5.9547	5.9233	3B	5.9320	5.9408	5.9594	5.9655	6.0000
	N	2	0.0000	6.0000	5.9910	—	5.9594	5.9513	5.9233	2	5.9323	5.9403	5.9594	5.9675	6.0000
		3	0.0000	6.0000	5.9910	—	5.9594	5.9537	5.9233	3	5.9323	5.9403	5.9594	5.9651	6.0000

a See Figure 1.
b For Class 2A, the maximum is increased by the amount of the allowance if the threads have an additive finish such as plating or coating.
c The juxtaposition of external and internal thread classes in this table does not indicate that they must be used in combination. See Section 4.
d For unfinished hot-rolled material.
e Revised minor diameter limits of Classes 1B and 2B are in process of ratification as Unified standard.

UNIFIED AND AMERICAN SCREW THREADS

TABLE 3 - LIMITING DIMENSIONS FOR SELECTED COMBINATIONS OF SPECIAL SERIES THREADS

Nominal Size and Threads Per Inch	Designation	EXTERNAL[c]							INTERNAL[c]					
		Class	Allowance	Major Diameter		Pitch Diameter		Minor Dia.[a]	Class	Minor Diameter[d]		Pitch Diameter		Major Dia.
				Max.[b]	Min.	Max.[b]	Min.			Min.	Max.	Min.	Max.	Min.
10 - 28	NS	2A	0.0010	0.1890	0.1825	0.1658	0.1625	0.1452	2B	0.151	0.160	0.1668	0.1711	0.1900
		2	0.0000	0.1900	0.1838	0.1668	0.1636	0.1462	2	0.1513	0.1596	0.1668	0.1700	0.1900
		3	0.0000	0.1900	0.1838	0.1668	0.1646	0.1462	3	0.1513	0.1596	0.1668	0.1690	0.1900
10 - 36	NS	2A	0.0009	0.1891	0.1836	0.1711	0.1681	0.1550	2B	0.160	0.166	0.1720	0.1759	0.1900
		2	0.0000	0.1900	0.1850	0.1720	0.1691	0.1559	2	0.1599	0.1646	0.1720	0.1749	0.1900
		3	0.0000	0.1900	0.1850	0.1720	0.1700	0.1559	3	0.1599	0.1646	0.1720	0.1740	0.1900
10 - 40	NS	2A	0.0009	0.1891	0.1840	0.1729	0.1700	0.1584	2B	0.163	0.169	0.1738	0.1775	0.1900
		2	0.0000	0.1900	0.1852	0.1738	0.1711	0.1593	2	0.1629	0.1668	0.1738	0.1765	0.1900
		3	0.0000	0.1900	0.1852	0.1738	0.1719	0.1593	3	0.1629	0.1668	0.1738	0.1757	0.1900
10 - 48	NS	2A	0.0008	0.1892	0.1847	0.1757	0.1731	0.1636	2B	0.167	0.172	0.1765	0.1799	0.1900
		2	0.0000	0.1900	0.1856	0.1765	0.1739	0.1644	2	0.1674	0.1707	0.1765	0.1791	0.1900
		3	0.0000	0.1900	0.1856	0.1765	0.1747	0.1644	3	0.1674	0.1707	0.1765	0.1783	0.1900
10 - 56	NS	2A	0.0007	0.1893	0.1852	0.1777	0.1752	0.1674	2B	0.171	0.175	0.1784	0.1816	0.1900
		2	0.0000	0.1900	0.1860	0.1784	0.1760	0.1681	2	0.1707	0.1738	0.1784	0.1808	0.1900
		3	0.0000	0.1900	0.1860	0.1784	0.1767	0.1681	3	0.1707	0.1738	0.1784	0.1801	0.1900
12 - 36	NS	2A	0.0009	0.2151	0.2096	0.1971	0.1941	0.1810	2B	0.186	0.192	0.1980	0.2019	0.2160
		2	0.0000	0.2160	0.2110	0.1980	0.1951	0.1819	2	0.1859	0.1901	0.1980	0.2009	0.2160
		3	0.0000	0.2160	0.2110	0.1980	0.1960	0.1819	3	0.1859	0.1901	0.1980	0.2000	0.2160
12 - 40	NS	2A	0.0009	0.2151	0.2100	0.1989	0.1960	0.1844	2B	0.189	0.195	0.1998	0.2035	0.2160
		2	0.0000	0.2160	0.2112	0.1998	0.1971	0.1853	2	0.1889	0.1927	0.1998	0.2025	0.2160
		3	0.0000	0.2160	0.2112	0.1998	0.1979	0.1853	3	0.1889	0.1927	0.1998	0.2017	0.2160
12 - 48	NS	2A	0.0008	0.2152	0.2107	0.2017	0.1991	0.1896	2B	0.193	0.198	0.2025	0.2059	0.2160
		2	0.0000	0.2160	0.2116	0.2025	0.1999	0.1904	2	0.1934	0.1967	0.2025	0.2051	0.2160
		3	0.0000	0.2160	0.2116	0.2025	0.2007	0.1904	3	0.1934	0.1967	0.2025	0.2043	0.2160
12 - 56	NS	2A	0.0007	0.2153	0.2112	0.2037	0.2012	0.1934	2B	0.197	0.201	0.2044	0.2076	0.2160
		2	0.0000	0.2160	0.2120	0.2044	0.2020	0.1941	2	0.1967	0.1998	0.2044	0.2068	0.2160
		3	0.0000	0.2160	0.2120	0.2044	0.2027	0.1941	3	0.1967	0.1998	0.2044	0.2061	0.2160
1/4 - 24	NS	2A	0.0011	0.2489	0.2417	0.2218	0.2181	0.1978	2B	0.205	0.215	0.2229	0.2277	0.2500
		2	0.0000	0.2500	0.2434	0.2229	0.2194	0.1989	2	0.2049	0.2126	0.2229	0.2264	0.2500
		3	0.0000	0.2500	0.2434	0.2229	0.2204	0.1989	3	0.2049	0.2126	0.2229	0.2254	0.2500
1/4 - 27	NS	2A	0.0010	0.2490	0.2423	0.2249	0.2214	0.2036	2B	0.210	0.219	0.2259	0.2304	0.2500
1/4 - 36	UNS	2A	0.0009	0.2491	0.2436	0.2311	0.2280	0.2150	2B	0.220	0.227	0.2320	0.2360	0.2500
	NS	2	0.0000	0.2500	0.2450	0.2320	0.2290	0.2159	2	0.2199	0.2241	0.2320	0.2350	0.2500
		3	0.0000	0.2500	0.2450	0.2320	0.2299	0.2159	3	0.2199	0.2241	0.2320	0.2341	0.2500
1/4 - 40	NS	2A	0.0009	0.2491	0.2440	0.2329	0.2300	0.2184	2B	0.223	0.229	0.2338	0.2376	0.2500
		2	0.0000	0.2500	0.2452	0.2338	0.2309	0.2193	2	0.2229	0.2267	0.2338	0.2367	0.2500
		3	0.0000	0.2500	0.2452	0.2338	0.2318	0.2193	3	0.2229	0.2267	0.2338	0.2358	0.2500
1/4 - 48	NS	2A	0.0008	0.2492	0.2447	0.2357	0.2330	0.2236	2B	0.227	0.232	0.2365	0.2401	0.2500

a See Figure 1.
b For Class 2A, the maximum is increased by the amount of the allowance if the threads have an additive finish such as plating or coating.
c The juxtaposition of external and internal thread classes in this table does not indicate that they must be used in combination. See Section 4.
d Revised minor diameter limits of Classes 1B and 2B are in process of ratification as Unified standard.

UNIFIED AND AMERICAN SCREW THREADS

TABLE 3 (CONTINUED) LIMITING DIMENSIONS FOR SELECTED COMBINATIONS OF SPECIAL SERIES THREADS

Nominal Size and Threads Per Inch	Designation	EXTERNAL[c]							INTERNAL[c]					
		Class	Allowance	Major Diameter		Pitch Diameter		Minor Dia.[a]	Class	Minor Diameter[d]		Pitch Diameter		Major Dia.
				Max.[b]	Min.	Max.[b]	Min.			Min.	Max.	Min.	Max.	Min.
1/4 - 48	NS	2	0.0000	0.2500	0.2456	0.2365	0.2338	0.2244	2	0.2274	0.2307	0.2365	0.2392	0.2500
		3	0.0000	0.2500	0.2456	0.2365	0.2346	0.2244	3	0.2274	0.2307	0.2365	0.2384	0.2500
1/4 - 56	NS	2A	0.0008	0.2492	0.2451	0.2376	0.2350	0.2273	2B	0.231	0.235	0.2384	0.2417	0.2500
		2	0.0000	0.2500	0.2460	0.2384	0.2358	0.2281	2	0.2307	0.2338	0.2384	0.2410	0.2500
		3	0.0000	0.2500	0.2460	0.2384	0.2366	0.2281	3	0.2307	0.2338	0.2384	0.2402	0.2500
5/16 - 20	NS	2A	0.0012	0.3113	0.3032	0.2788	0.2748	0.2500	2B	0.258	0.270	0.2800	0.2852	0.3125
		2	0.0000	0.3125	0.3053	0.2800	0.2762	0.2512	2	0.2584	0.2672	0.2800	0.2838	0.3125
		3	0.0000	0.3125	0.3053	0.2800	0.2773	0.2512	3	0.2584	0.2672	0.2800	0.2827	0.3125
5/16 - 27	NS	2A	0.0010	0.3115	0.3048	0.2874	0.2839	0.2661	2B	0.272	0.281	0.2884	0.2929	0.3125
5/16 - 28	NS	2A	0.0010	0.3115	0.3050	0.2883	0.2849	0.2677	2B	0.274	0.282	0.2893	0.2937	0.3125
		2	0.0000	0.3125	0.3063	0.2893	0.2860	0.2687	2	0.2738	0.2794	0.2893	0.2926	0.3125
		3	0.0000	0.3125	0.3063	0.2893	0.2870	0.2687	3	0.2738	0.2794	0.2893	0.2916	0.3125
5/16 - 36	UNS	2A	0.0009	0.3116	0.3061	0.2936	0.2905	0.2775	2B	0.282	0.289	0.2945	0.2985	0.3125
	NS	2	0.0000	0.3125	0.3075	0.2945	0.2915	0.2784	2	0.2824	0.2866	0.2945	0.2975	0.3125
		3	0.0000	0.3125	0.3075	0.2945	0.2924	0.2784	3	0.2824	0.2866	0.2945	0.2966	0.3125
5/16 - 40	NS	2A	0.0009	0.3116	0.3065	0.2954	0.2925	0.2809	2B	0.285	0.291	0.2963	0.3001	0.3125
		2	0.0000	0.3125	0.3077	0.2963	0.2934	0.2818	2	0.2854	0.2892	0.2963	0.2992	0.3125
		3	0.0000	0.3125	0.3077	0.2963	0.2943	0.2818	3	0.2854	0.2892	0.2963	0.2983	0.3125
5/16 - 48	NS	2A	0.0008	0.3117	0.3072	0.2982	0.2955	0.2861	2B	0.290	0.295	0.2990	0.3026	0.3125
		2	0.0000	0.3125	0.3081	0.2990	0.2963	0.2869	2	0.2899	0.2932	0.2990	0.3017	0.3125
		3	0.0000	0.3125	0.3081	0.2990	0.2971	0.2869	3	0.2899	0.2932	0.2990	0.3009	0.3125
3/8 - 18	NS	2A	0.0013	0.3737	0.3650	0.3376	0.3333	0.3055	2B	0.315	0.328	0.3389	0.3445	0.3750
		2	0.0000	0.3750	0.3668	0.3389	0.3347	0.3068	2	0.3149	0.3240	0.3389	0.3431	0.3750
		3	0.0000	0.3750	0.3668	0.3389	0.3359	0.3068	3	0.3149	0.3240	0.3389	0.3419	0.3750
3/8 - 20	NS	2A	0.0012	0.3738	0.3657	0.3413	0.3372	0.3125	2B	0.321	0.332	0.3425	0.3479	0.3750
		2	0.0000	0.3750	0.3678	0.3425	0.3384	0.3137	2	0.3209	0.3284	0.3425	0.3466	0.3750
		3	0.0000	0.3750	0.3678	0.3425	0.3397	0.3137	3	0.3209	0.3284	0.3425	0.3453	0.3750
3/8 - 27	NS	2A	0.0011	0.3739	0.3672	0.3498	0.3462	0.3285	2B	0.335	0.344	0.3509	0.3556	0.3750
3/8 - 28	NS	2A	0.0011	0.3739	0.3674	0.3507	0.3471	0.3301	2B	0.336	0.345	0.3518	0.3564	0.3750
		2	0.0000	0.3750	0.3688	0.3518	0.3483	0.3312	2	0.3363	0.3419	0.3518	0.3553	0.3750
		3	0.0000	0.3750	0.3688	0.3518	0.3493	0.3312	3	0.3363	0.3419	0.3518	0.3543	0.3750
3/8 - 36	UNS	2A	0.0010	0.3740	0.3685	0.3560	0.3528	0.3399	2B	0.345	0.352	0.3570	0.3612	0.3750
3/8 - 40	NS	2A	0.0009	0.3741	0.3690	0.3579	0.3548	0.3434	2B	0.348	0.354	0.3588	0.3628	0.3750
		2	0.0000	0.3750	0.3702	0.3588	0.3557	0.3443	2	0.3479	0.3517	0.3588	0.3619	0.3750
		3	0.0000	0.3750	0.3702	0.3588	0.3566	0.3443	3	0.3479	0.3517	0.3588	0.3610	0.3750
0.390 - 27	NS	2A	0.0011	0.3889	0.3822	0.3648	0.3612	0.3435	2B	0.350	0.359	0.3659	0.3706	0.3900

a See Figure 1.
b For Class 2A, the maximum is increased by the amount of the allowance if the threads have an additive finish such as plating or coating.
c The juxtaposition of external and internal thread classes in this table does not indicate that they must be used in combination. See Section 4.
d Revised minor diameter limits of Classes 1B and 2B are in process of ratification as Unified standard.

UNIFIED AND AMERICAN SCREW THREADS

TABLE 3 (CONTINUED) LIMITING DIMENSIONS FOR SELECTED COMBINATIONS OF SPECIAL SERIES THREADS

Nominal Size and Threads Per Inch	Designation	EXTERNAL[c]							INTERNAL[c]					
		Class	Allowance	Major Diameter		Pitch Diameter		Minor Dia.[a]	Class	Minor Diameter[d]		Pitch Diameter		Major Dia.
				Max.[b]	Min.	Max.[b]	Min.			Min.	Max.	Min.	Max.	Min.
1-1/4 - 20	NS	2	0.0000	1.2500	1.2428	1.2175	1.2124	1.1887	2	1.1959	1.2031	1.2175	1.2226	1.2500
		3	0.0000	1.2500	1.2428	1.2175	1.2140	1.1887	3	1.1959	1.2031	1.2175	1.2210	1.2500
1-1/4 - 24	NS	2A	0.0013	1.2487	1.2415	1.2216	1.2173	1.1976	2B	1.205	1.215	1.2229	1.2285	1.2500
		2	0.0000	1.2500	1.2434	1.2229	1.2181	1.1989	2	1.2049	1.2113	1.2229	1.2277	1.2500
		3	0.0000	1.2500	1.2434	1.2229	1.2196	1.1989	3	1.2049	1.2113	1.2229	1.2262	1.2500
1-3/8 - 8	UNS	2A	0.0021	1.3729	1.3579	1.2917	1.2847	1.2195	2B	1.240	1.265	1.2938	1.3028	1.3750
	NS	2	0.0000	1.3750	1.3598	1.2938	1.2865	1.2216	2	1.2397	1.2532	1.2938	1.3011	1.3750
		3	0.0000	1.3750	1.3598	1.2938	1.2887	1.2216	3	1.2397	1.2532	1.2938	1.2989	1.3750
1-3/8 - 10	NS	2A	0.0019	1.3731	1.3602	1.3081	1.3018	1.2504	2B	1.267	1.288	1.3100	1.3182	1.3750
		2	0.0000	1.3750	1.3622	1.3100	1.3034	1.2523	2	1.2667	1.2775	1.3100	1.3166	1.3750
		3	0.0000	1.3750	1.3622	1.3100	1.3054	1.2523	3	1.2667	1.2775	1.3100	1.3146	1.3750
1-3/8 - 14	NS	2A	0.0016	1.3734	1.3631	1.3270	1.3216	1.2858	2B	1.298	1.314	1.3286	1.3356	1.3750
		2	0.0000	1.3750	1.3652	1.3286	1.3228	1.2874	2	1.2977	1.3062	1.3286	1.3344	1.3750
		3	0.0000	1.3750	1.3652	1.3286	1.3246	1.2874	3	1.2977	1.3062	1.3286	1.3326	1.3750
1-3/8 - 20	NS	2	0.0000	1.3750	1.3678	1.3425	1.3374	1.3137	2	1.3209	1.3281	1.3425	1.3476	1.3750
		3	0.0000	1.3750	1.3678	1.3425	1.3390	1.3137	3	1.3209	1.3281	1.3425	1.3460	1.3750
1-3/8 - 24	NS	2	0.0000	1.3750	1.3684	1.3479	1.3431	1.3239	2	1.3299	1.3363	1.3479	1.3527	1.3750
		3	0.0000	1.3750	1.3684	1.3479	1.3446	1.3239	3	1.3299	1.3363	1.3479	1.3512	1.3750
1-1/2 - 8	UNS	2A	0.0021	1.4979	1.4829	1.4167	1.4096	1.3445	2B	1.365	1.390	1.4188	1.4280	1.5000
	NS	2	0.0000	1.5000	1.4848	1.4188	1.4113	1.3466	2	1.3647	1.3782	1.4188	1.4263	1.5000
		3	0.0000	1.5000	1.4848	1.4188	1.4136	1.3466	3	1.3647	1.3782	1.4188	1.4240	1.5000
1-1/2 - 10	NS	2A	0.0019	1.4981	1.4852	1.4331	1.4267	1.3754	2B	1.392	1.413	1.4350	1.4433	1.5000
		2	0.0000	1.5000	1.4872	1.4350	1.4282	1.3773	2	1.3917	1.4025	1.4350	1.4418	1.5000
		3	0.0000	1.5000	1.4872	1.4350	1.4302	1.3773	3	1.3917	1.4025	1.4350	1.4398	1.5000
1-1/2 - 14	NS	2A	0.0017	1.4983	1.4880	1.4519	1.4464	1.4107	2B	1.423	1.438	1.4536	1.4608	1.5000
		2	0.0000	1.5000	1.4902	1.4536	1.4476	1.4124	2	1.4227	1.4312	1.4536	1.4596	1.5000
		3	0.0000	1.5000	1.4902	1.4536	1.4494	1.4124	3	1.4227	1.4312	1.4536	1.4578	1.5000
1-1/2 - 20	UNS	2A	0.0014	1.4986	1.4905	1.4661	1.4613	1.4373	2B	1.446	1.457	1.4675	1.4737	1.5000
	NS	2	0.0000	1.5000	1.4928	1.4675	1.4622	1.4387	2	1.4459	1.4531	1.4675	1.4728	1.5000
		3	0.0000	1.5000	1.4928	1.4675	1.4638	1.4387	3	1.4459	1.4531	1.4675	1.4712	1.5000
1-1/2 - 24	NS	2A	0.0013	1.4987	1.4915	1.4716	1.4672	1.4476	2B	1.455	1.465	1.4729	1.4787	1.5000
		2	0.0000	1.5000	1.4934	1.4729	1.4679	1.4489	2	1.4549	1.4613	1.4729	1.4779	1.5000
		3	0.0000	1.5000	1.4934	1.4729	1.4694	1.4489	3	1.4549	1.4613	1.4729	1.4764	1.5000
1-5/8 - 6	UNS	2A	0.0024	1.6226	1.6044	1.5143	1.5062	1.4181	2B	1.445	1.475	1.5167	1.5272	1.6250
	NS	2	0.0000	1.6250	1.6048	1.5167	1.5082	1.4205	2	1.4446	1.4626	1.5167	1.5252	1.6250
		3	0.0000	1.6250	1.6048	1.5167	1.5107	1.4205	3	1.4446	1.4626	1.5167	1.5227	1.6250

a See Figure 1.
b For Class 2A, the maximum is increased by the amount of the allowance if the threads have an additive finish such as plating or coating.
c The juxtaposition of external and internal thread classes in this table does not indicate that they must be used in combination. See Section 4.
d Revised minor diameter limits of Classes 1B and 2B are in process of ratification as Unified standard.

UNIFIED AND AMERICAN SCREW THREADS

TABLE 3 (CONTINUED) LIMITING DIMENSIONS FOR SELECTED COMBINATIONS OF SPECIAL SERIES THREADS

Nominal Size and Threads Per Inch	Designation	EXTERNAL[c]							INTERNAL[c]					
		Class	Allowance	Major Diameter		Pitch Diameter		Minor Dia.[a]	Class	Minor Diameter[d]		Pitch Diameter		Major Dia.
				Max.[b]	Min.	Max.[b]	Min.			Min.	Max.	Min.	Max.	Min.
1-5/8 - 8	UNS	2A	0.0021	1.6229	1.6079	1.5417	1.5346	1.4695	2B	1.490	1.515	1.5438	1.5530	1.6250
	NS	2	0.0000	1.6250	1.6098	1.5438	1.5363	1.4716	2	1.4897	1.5032	1.5438	1.5513	1.6250
		3	0.0000	1.6250	1.6098	1.5438	1.5386	1.4716	3	1.4897	1.5032	1.5438	1.5490	1.6250
1-5/8 - 10	NS	2A	0.0019	1.6231	1.6102	1.5581	1.5517	1.5004	2B	1.517	1.538	1.5600	1.5683	1.6250
		2	0.0000	1.6250	1.6122	1.5600	1.5532	1.5023	2	1.5167	1.5275	1.5600	1.5668	1.6250
		3	0.0000	1.6250	1.6122	1.5600	1.5552	1.5023	3	1.5167	1.5275	1.5600	1.5648	1.6250
1-5/8 - 14	NS	2A	0.0017	1.6233	1.6130	1.5769	1.5714	1.5357	2B	1.548	1.564	1.5786	1.5858	1.6250
		2	0.0000	1.6250	1.6152	1.5786	1.5726	1.5374	2	1.5477	1.5562	1.5786	1.5846	1.6250
		3	0.0000	1.6250	1.6152	1.5786	1.5744	1.5374	3	1.5477	1.5562	1.5786	1.5828	1.6250
1-5/8 - 20	UNS	2A	0.0014	1.6236	1.6155	1.5911	1.5863	1.5623	2B	1.571	1.582	1.5925	1.5987	1.6250
	NS	2	0.0000	1.6250	1.6178	1.5925	1.5872	1.5637	2	1.5709	1.5781	1.5925	1.5978	1.6250
		3	0.0000	1.6250	1.6178	1.5925	1.5888	1.5637	3	1.5709	1.5781	1.5925	1.5962	1.6250
1-5/8 - 24	NS	2A	0.0013	1.6237	1.6165	1.5966	1.5922	1.5726	2B	1.580	1.590	1.5979	1.6037	1.6250
		2	0.0000	1.6250	1.6184	1.5979	1.5929	1.5739	2	1.5799	1.5863	1.5979	1.6029	1.6250
		3	0.0000	1.6250	1.6184	1.5979	1.5944	1.5739	3	1.5799	1.5863	1.5979	1.6014	1.6250
1-3/4 - 6	UNS	2A	0.0025	1.7475	1.7293	1.6392	1.6310	1.5430	2B	1.570	1.600	1.6417	1.6523	1.7500
	NS	2	0.0000	1.7500	1.7298	1.6417	1.6330	1.5455	2	1.5696	1.5876	1.6417	1.6504	1.7500
		3	0.0000	1.7500	1.7298	1.6417	1.6356	1.5455	3	1.5696	1.5876	1.6417	1.6478	1.7500
1-3/4 - 8	UNS	2A	0.0021	1.7479	1.7329	1.6667	1.6596	1.5945	2B	1.615	1.640	1.6688	1.6781	1.7500
	NS	2	0.0000	1.7500	1.7348	1.6688	1.6611	1.5966	2	1.6147	1.6282	1.6688	1.6765	1.7500
		3	0.0000	1.7500	1.7348	1.6688	1.6634	1.5966	3	1.6147	1.6282	1.6688	1.6742	1.7500
1-3/4 - 10	NS	2A	0.0019	1.7481	1.7352	1.6831	1.6766	1.6254	2B	1.642	1.663	1.6850	1.6934	1.7500
		2	0.0000	1.7500	1.7372	1.6850	1.6780	1.6273	2	1.6417	1.6525	1.6850	1.6920	1.7500
		3	0.0000	1.7500	1.7372	1.6850	1.6801	1.6273	3	1.6417	1.6525	1.6850	1.6899	1.7500
1-3/4 - 14	NS	2A	0.0017	1.7483	1.7380	1.7019	1.6963	1.6607	2B	1.673	1.688	1.7036	1.7109	1.7500
		2	0.0000	1.7500	1.7402	1.7036	1.6974	1.6624	2	1.6727	1.6812	1.7036	1.7098	1.7500
		3	0.0000	1.7500	1.7402	1.7036	1.6993	1.6624	3	1.6727	1.6812	1.7036	1.7079	1.7500
1-3/4 - 18	NS	2A	0.0015	1.7485	1.7398	1.7124	1.7073	1.6803	2B	1.690	1.703	1.7139	1.7205	1.7500
		2	0.0000	1.7500	1.7418	1.7139	1.7082	1.6818	2	1.6899	1.6975	1.7139	1.7196	1.7500
		3	0.0000	1.7500	1.7418	1.7139	1.7099	1.6818	3	1.6899	1.6975	1.7139	1.7179	1.7500
1-3/4 - 20	UNS	2A	0.0015	1.7485	1.7404	1.7160	1.7112	1.6872	2B	1.696	1.707	1.7175	1.7238	1.7500
	NS	2	0.0000	1.7500	1.7428	1.7175	1.7120	1.6887	2	1.6959	1.7031	1.7175	1.7230	1.7500
		3	0.0000	1.7500	1.7428	1.7175	1.7137	1.6887	3	1.6959	1.7031	1.7175	1.7213	1.7500
1-7/8 - 6	UNS	2A	0.0025	1.8725	1.8543	1.7642	1.7560	1.6680	2B	1.695	1.725	1.7667	1.7773	1.8750

a See Figure 1.
b For Class 2A, the maximum is increased by the amount of the allowance if the threads have an additive finish such as plating or coating.
c The juxtaposition of external and internal thread classes in this table does not indicate that they must be used in combination. See Section 4.
d Revised minor diameter limits of Classes 1B and 2B are in process of ratification as Unified standard.

UNIFIED AND AMERICAN SCREW THREADS

TABLE 3 (CONTINUED) LIMITING DIMENSIONS FOR SELECTED COMBINATIONS OF SPECIAL SERIES THREADS

Nominal Size and Threads Per Inch	Designation	EXTERNAL[c]							INTERNAL[c]					
		Class	Allowance	Major Diameter		Pitch Diameter		Minor Dia.[a]	Class	Minor Diameter[d]		Pitch Diameter		Major Dia.
				Max.[b]	Min.	Max.[b]	Min.			Min.	Max.	Min.	Max.	Min.
1-7/8 - 6	NS	2	0.0000	1.8750	1.8548	1.7667	1.7580	1.6705	2	1.6946	1.7126	1.7667	1.7754	1.8750
		3	0.0000	1.8750	1.8548	1.7667	1.7606	1.6705	3	1.6946	1.7126	1.7667	1.7728	1.8750
1-7/8 - 8	UNS	2A	0.0021	1.8729	1.8579	1.7917	1.7846	1.7195	2B	1.740	1.765	1.7938	1.8031	1.8750
	NS	2	0.0000	1.8750	1.8598	1.7938	1.7861	1.7216	2	1.7397	1.7532	1.7938	1.8015	1.8750
		3	0.0000	1.8750	1.8598	1.7938	1.7884	1.7216	3	1.7397	1.7532	1.7938	1.7992	1.8750
1-7/8 - 10	NS	2A	0.0019	1.8731	1.8602	1.8081	1.8016	1.7504	2B	1.767	1.788	1.8100	1.8184	1.8750
		2	0.0000	1.8750	1.8622	1.8100	1.8030	1.7523	2	1.7667	1.7775	1.8100	1.8170	1.8750
		3	0.0000	1.8750	1.8622	1.8100	1.8051	1.7523	3	1.7667	1.7775	1.8100	1.8149	1.8750
1-7/8 - 14	NS	2A	0.0017	1.8733	1.8630	1.8269	1.8213	1.7857	2B	1.798	1.814	1.8286	1.8359	1.8750
		2	0.0000	1.8750	1.8652	1.8286	1.8224	1.7874	2	1.7977	1.8062	1.8286	1.8348	1.8750
		3	0.0000	1.8750	1.8652	1.8286	1.8243	1.7874	3	1.7977	1.8062	1.8286	1.8329	1.8750
1-7/8 - 18	NS	2A	0.0015	1.8735	1.8648	1.8374	1.8323	1.8053	2B	1.815	1.828	1.8389	1.8455	1.8750
		2	0.0000	1.8750	1.8668	1.8389	1.8332	1.8068	2	1.8149	1.8225	1.8389	1.8446	1.8750
		3	0.0000	1.8750	1.8668	1.8389	1.8349	1.8068	3	1.8149	1.8225	1.8389	1.8429	1.8750
1-7/8 - 20	UNS	2A	0.0015	1.8735	1.8654	1.8410	1.8362	1.8122	2B	1.821	1.832	1.8425	1.8488	1.8750
	NS	2	0.0000	1.8750	1.8678	1.8425	1.8370	1.8137	2	1.8209	1.8281	1.8425	1.8480	1.8750
		3	0.0000	1.8750	1.8678	1.8425	1.8387	1.8137	3	1.8209	1.8281	1.8425	1.8463	1.8750
2 - 6	UNS	2A	0.0025	1.9975	1.9793	1.8892	1.8809	1.7930	2B	1.820	1.850	1.8917	1.9025	2.0000
	NS	2	0.0000	2.0000	1.9798	1.8917	1.8828	1.7955	2	1.8196	1.8376	1.8917	1.9006	2.0000
		3	0.0000	2.0000	1.9798	1.8917	1.8855	1.7955	3	1.8196	1.8376	1.8917	1.8979	2.0000
2 - 8	UNS	2A	0.0022	1.9978	1.9828	1.9166	1.9094	1.8444	2B	1.865	1.890	1.9188	1.9282	2.0000
	NS	2	0.0000	2.0000	1.9848	1.9188	1.9109	1.8466	2	1.8647	1.8782	1.9188	1.9267	2.0000
		3	0.0000	2.0000	1.9848	1.9188	1.9133	1.8466	3	1.8647	1.8782	1.9188	1.9243	2.0000
2 - 10	NS	2A	0.0020	1.9980	1.9851	1.9330	1.9265	1.8753	2B	1.892	1.913	1.9350	1.9435	2.0000
		2	0.0000	2.0000	1.9872	1.9350	1.9278	1.8773	2	1.8917	1.9025	1.9350	1.9422	2.0000
		3	0.0000	2.0000	1.9872	1.9350	1.9300	1.8773	3	1.8917	1.9025	1.9350	1.9400	2.0000
2 - 14	NS	2A	0.0017	1.9983	1.9880	1.9519	1.9462	1.9107	2B	1.923	1.938	1.9536	1.9610	2.0000
		2	0.0000	2.0000	1.9902	1.9536	1.9472	1.9124	2	1.9227	1.9312	1.9536	1.9600	2.0000
		3	0.0000	2.0000	1.9902	1.9536	1.9492	1.9124	3	1.9227	1.9312	1.9536	1.9580	2.0000
2 - 18	NS	2A	0.0015	1.9985	1.9898	1.9624	1.9573	1.9303	2B	1.940	1.953	1.9639	1.9706	2.0000
		2	0.0000	2.0000	1.9918	1.9639	1.9581	1.9318	2	1.9399	1.9475	1.9639	1.9697	2.0000
		3	0.0000	2.0000	1.9918	1.9639	1.9598	1.9318	3	1.9399	1.9475	1.9639	1.9680	2.0000
2 - 20	UNS	2A	0.0015	1.9985	1.9904	1.9660	1.9611	1.9372	2B	1.946	1.957	1.9675	1.9739	2.0000
	NS	2	0.0000	2.0000	1.9928	1.9675	1.9618	1.9387	2	1.9459	1.9531	1.9675	1.9732	2.0000
		3	0.0000	2.0000	1.9928	1.9675	1.9635	1.9387	3	1.9459	1.9531	1.9675	1.9715	2.0000

a See Figure 1.
b For Class 2A, the maximum is increased by the amount of the allowance if the threads have an additive finish such as plating or coating.
c The juxtaposition of external and internal thread classes in this table does not indicate that they must be used in combination. See Section 4.
d Revised minor diameter limits of Classes 1B and 2B are in process of ratification as Unified standard.

UNIFIED AND AMERICAN SCREW THREADS

TABLE 3 (CONTINUED) LIMITING DIMENSIONS FOR SELECTED COMBINATIONS OF SPECIAL SERIES THREADS

Nominal Size and Threads Per Inch	Designation	EXTERNAL[c]							INTERNAL[c]					
		Class	Allowance	Major Diameter		Pitch Diameter		Minor Dia.[a]	Class	Minor Diameter[d]		Pitch Diameter		Major Dia.
				Max.[b]	Min.	Max.[b]	Min.			Min.	Max.	Min.	Max.	Min.
2-1/8 - 8	UNS	2A	0.0022	2.1228	2.1078	2.0416	2.0344	1.9694	2B	1.990	2.015	2.0438	2.0532	2.1250
2-1/4 - 6	UNS	2A	0.0025	2.2475	2.2293	2.1392	2.1309	2.0430	2B	2.070	2.100	2.1417	2.1525	2.2500
	NS	2	0.0000	2.2500	2.2298	2.1417	2.1328	2.0455	2	2.0696	2.0876	2.1417	2.1506	2.2500
		3	0.0000	2.2500	2.2298	2.1417	2.1355	2.0455	3	2.0696	2.0876	2.1417	2.1479	2.2500
2-1/4 - 8	UNS	2A	0.0022	2.2478	2.2328	2.1666	2.1594	2.0944	2B	2.115	2.140	2.1688	2.1782	2.2500
	NS	2	0.0000	2.2500	2.2348	2.1688	2.1609	2.0966	2	2.1147	2.1282	2.1688	2.1767	2.2500
		3	0.0000	2.2500	2.2348	2.1688	2.1633	2.0966	3	2.1147	2.1282	2.1688	2.1743	2.2500
2-1/4 - 10	NS	2A	0.0020	2.2480	2.2351	2.1830	2.1765	2.1253	2B	2.142	2.163	2.1850	2.1935	2.2500
		2	0.0000	2.2500	2.2372	2.1850	2.1778	2.1273	2	2.1417	2.1525	2.1850	2,1922	2.2500
		3	0.0000	2.2500	2.2372	2.1850	2.1800	2.1273	3	2.1417	2.1525	2.1850	2.1900	2.2500
2-1/4 - 14	NS	2A	0.0017	2.2483	2.2380	2.2019	2.1962	2.1607	2B	2.173	2.188	2.2036	2.2110	2.2500
		2	0.0000	2.2500	2.2402	2.2036	2.1972	2.1624	2	2.1727	2.1812	2.2036	2.2100	2.2500
		3	0.0000	2.2500	2.2402	2.2036	2.1992	2.1624	3	2.1727	2.1812	2.2036	2.2080	2.2500
2-1/4 - 18	NS	2A	0.0015	2.2485	2.2398	2.2124	2.2073	2.1803	2B	2.190	2.203	2.2139	2.2206	2.2500
		2	0.0000	2.2500	2.2418	2.2139	2.2081	2.1818	2	2.1899	2.1975	2.2139	2.2197	2.2500
		3	0.0000	2.2500	2.2418	2.2139	2.2098	2.1818	3	2.1899	2.1975	2.2139	2.2180	2.2500
2-1/4 - 20	UNS	2A	0.0015	2.2485	2.2404	2.2160	2.2111	2.1872	2B	2.196	2.207	2.2175	2.2239	2.2500
	NS	2	0.0000	2.2500	2.2428	2.2175	2.2118	2.1887	2	2.1959	2.2031	2.2175	2.2232	2.2500
		3	0.0000	2.2500	2.2428	2.2175	2.2135	2.1887	3	2.1959	2.2031	2.2175	2.2215	2.2500
2-1/2 - 6	UNS	2A	0.0025	2.4975	2.4793	2.3892	2.3808	2.2930	2B	2.320	2.350	2.3917	2.4026	2.5000
	NS	2	0.0000	2.5000	2.4798	2.3917	2.3825	2.2955	2	2.3196	2.3376	2.3917	2.4009	2.5000
		3	0.0000	2.5000	2.4798	2.3917	2.3852	2.2955	3	2.3196	2.3376	2.3917	2.3982	2.5000
2-1/2 - 8	UNS	2A	0.0022	2.4978	2.4828	2.4166	2.4092	2.3444	2B	2.365	2.390	2.4188	2.4284	2.5000
	NS	2	0.0000	2.5000	2.4848	2.4188	2.4106	2.3466	2	2.3647	2.3782	2.4188	2.4270	2.5000
		3	0.0000	2.5000	2.4848	2.4188	2.4131	2.3466	3	2.3647	2.3782	2.4188	2.4245	2.5000
2-1/2 - 10	NS	2A	0.0020	2.4980	2.4851	2.4330	2.4263	2.3753	2B	2.392	2.413	2.4350	2.4437	2.5000
		2	0.0000	2.5000	2.4872	2.4350	2.4275	2.3773	2	2.3917	2.4025	2.4350	2.4425	2.5000
		3	0.0000	2.5000	2.4872	2.4350	2.4297	2.3773	3	2.3917	2.4025	2.4350	2.4403	2.5000
2-1/2 - 14	NS	2A	0.0017	2.4983	2.4880	2.4519	2.4461	2.4107	2B	2.423	2.438	2.4536	2.4612	2.5000
		2	0.0000	2.5000	2.4902	2.4536	2.4469	2.4124	2	2.4227	2.4312	2.4536	2.4603	2.5000
		3	0.0000	2.5000	2.4902	2.4536	2.4489	2.4124	3	2.4227	2.4312	2.4536	2.4583	2.5000
2-1/2 - 18	NS	2A	0.0016	2.4984	2.4897	2.4623	2.4570	2.4302	2B	2.440	2.453	2.4639	2.4708	2.5000
		2	0.0000	2.5000	2.4918	2.4639	2.4577	2.4318	2	2.4399	2.4475	2.4639	2.4701	2.5000
		3	0.0000	2.5000	2.4918	2.4639	2.4596	2.4318	3	2.4399	2.4475	2.4639	2.4682	2.5000
2-1/2 - 20	UNS	2A	0.0015	2.4985	2.4904	2.4660	2.4609	2.4372	2B	2.446	2.457	2.4675	2.4741	2.5000

a See Figure 1.
b For Class 2A, the maximum is increased by the amount of the allowance if the threads have an additive finish such as plating or coating.
c The juxtaposition of external and internal thread classes in this table does not indicate that they must be used in combination. See Section 4.
d Revised minor diameter limits of Classes 1B and 2B are in process of ratification as Unified standard.

UNIFIED AND AMERICAN SCREW THREADS

TABLE 3 (CONTINUED) LIMITING DIMENSIONS FOR SELECTED COMBINATIONS OF SPECIAL SERIES THREADS

Nominal Size and Threads Per Inch	Designation	EXTERNAL[c]							INTERNAL[c]					
		Class	Allowance	Major Diameter		Pitch Diameter		Minor Dia.[a]	Class	Minor Diameter[d]		Pitch Diameter		Major Dia.
				Max.[b]	Min.	Max.[b]	Min.			Min.	Max.	Min.	Max.	Min.
2-1/2 - 20	NS	2	0.0000	2.5000	2.4928	2.4675	2.4615	2.4387	2	2.4459	2.4531	2.4675	2.4735	2.5000
		3	0.0000	2.5000	2.4928	2.4675	2.4633	2.4387	3	2.4459	2.4531	2.4675	2.4717	2.5000
2-3/4 - 6	UNS	2A	0.0025	2.7475	2.7293	2.6392	2.6308	2.5430	2B	2.570	2.600	2.6417	2.6526	2.7500
	NS	2	0.0000	2.7500	2.7298	2.6417	2.6325	2.5455	2	2.5696	2.5876	2.6417	2.6509	2.7500
		3	0.0000	2.7500	2.7298	2.6417	2.6352	2.5455	3	2.5696	2.5876	2.6417	2.6482	2.7500
2-3/4 - 8	UNS	2A	0.0022	2.7478	2.7328	2.6666	2.6592	2.5944	2B	2.615	2.640	2.6688	2.6784	2.7500
	NS	2	0.0000	2.7500	2.7348	2.6688	2.6606	2.5966	2	2.6147	2.6282	2.6688	2.6770	2.7500
		3	0.0000	2.7500	2.7348	2.6688	2.6631	2.5966	3	2.6147	2.6282	2.6688	2.6745	2.7500
2-3/4 - 10	NS	2A	0.0020	2.7480	2.7351	2.6830	2.6763	2.6253	2B	2.642	2.663	2.6850	2.6937	2.7500
		2	0.0000	2.7500	2.7372	2.6850	2.6775	2.6273	2	2.6417	2.6525	2.6850	2.6925	2.7500
		3	0.0000	2.7500	2.7372	2.6850	2.6797	2.6273	3	2.6417	2.6525	2.6850	2.6903	2.7500
2-3/4 - 14	NS	2A	0.0017	2.7483	2.7380	2.7019	2.6961	2.6607	2B	2.673	2.688	2.7036	2.7112	2.7500
		2	0.0000	2.7500	2.7402	2.7036	2.6969	2.6624	2	2.6727	2.6812	2.7036	2.7103	2.7500
		3	0.0000	2.7500	2.7402	2.7036	2.6989	2.6624	3	2.6727	2.6812	2.7036	2.7083	2.7500
2-3/4 - 18	NS	2A	0.0016	2.7484	2.7397	2.7123	2.7070	2.6802	2B	2.690	2.703	2.7139	2.7208	2.7500
		2	0.0000	2.7500	2.7418	2.7139	2.7077	2.6818	2	2.6899	2.6975	2.7139	2.7201	2.7500
		3	0.0000	2.7500	2.7418	2.7139	2.7096	2.6818	3	2.6899	2.6975	2.7139	2.7182	2.7500
3 - 6	UNS	2A	0.0026	2.9974	2.9792	2.8891	2.8806	2.7929	2B	2.820	2.850	2.8917	2.9028	3.0000
	NS	2	0.0000	3.0000	2.9798	2.8917	2.8822	2.7955	2	2.8196	2.8376	2.8917	2.9012	3.0000
		3	0.0000	3.0000	2.9798	2.8917	2.8850	2.7955	3	2.8196	2.8376	2.8917	2.8984	3.0000
3 - 8	UNS	2A	0.0023	2.9977	2.9827	2.9165	2.9090	2.8443	2B	2.865	2.890	2.9188	2.9286	3.0000
	NS	2	0.0000	3.0000	2.9848	2.9188	2.9103	2.8466	2	2.8647	2.8782	2.9188	2.9273	3.0000
		3	0.0000	3.0000	2.9848	2.9188	2.9129	2.8466	3	2.8647	2.8782	2.9188	2.9247	3.0000
3 - 10	NS	2A	0.0020	2.9980	2.9851	2.9330	2.9262	2.8753	2B	2.892	2.913	2.9350	2.9439	3.0000
		2	0.0000	3.0000	2.9872	2.9350	2.9272	2.8773	2	2.8917	2.9025	2.9350	2.9428	3.0000
		3	0.0000	3.0000	2.9872	2.9350	2.9295	2.8773	3	2.8917	2.9025	2.9350	2.9405	3.0000
3 -14	NS	2A	0.0018	2.9982	2.9879	2.9518	2.9459	2.9106	2B	2.923	2.938	2.9536	2.9613	3.0000
		2	0.0000	3.0000	2.9902	2.9536	2.9466	2.9124	2	2.9227	2.9312	2.9536	2.9606	3.0000
		3	0.0000	3.0000	2.9902	2.9536	2.9487	2.9124	3	2.9227	2.9312	2.9536	2.9585	3.0000
3 -18	NS	2A	0.0016	2.9984	2.9897	2.9623	2.9569	2.9302	2B	2.940	2.953	2.9639	2.9709	3.0000
		2	0.0000	3.0000	2.9918	2.9639	2.9574	2.9318	2	2.9399	2.9475	2.9639	2.9704	3.0000
		3	0.0000	3.0000	2.9918	2.9639	2.9594	2.9318	3	2.9399	2.9475	2.9639	2.9684	3.0000
3-1/4 - 6	UNS	2A	0.0026	3.2474	3.2292	3.1391	3.1306	3.0429	2B	3.070	3.100	3.1417	3.1528	3.2500
	NS	2	0.0000	3.2500	3.2298	3.1417	3.1322	3.0455	2	3.0696	3.0876	3.1417	3.1512	3.2500
		3	0.0000	3.2500	3.2298	3.1417	3.1350	3.0455	3	3.0696	3.0876	3.1417	3.1484	3.2500

a See Figure 1.
b For Class 2A, the maximum is increased by the amount of the allowance if the threads have an additive finish such as plating or coating.
c The juxtaposition of external and internal thread classes in this table does not indicate that they must be used in combination. See Section 4.
d Revised minor diameter limits of Classes 1B and 2B are in process of ratification as Unified standard.

UNIFIED AND AMERICAN SCREW THREADS

TABLE 3 (CONTINUED) LIMITING DIMENSIONS FOR SELECTED COMBINATIONS OF SPECIAL SERIES THREADS

Nominal Size and Threads Per Inch	Designation	EXTERNAL[c]							INTERNAL[c]					
		Class	Allowance	Major Diameter		Pitch Diameter		Minor Dia.[a]	Class	Minor Diameter[d]		Pitch Diameter		Major Dia.
				Max.[b]	Min.	Max.[b]	Min.			Min.	Max.	Min.	Max.	Min.
3-1/4 - 8	UNS	2A	0.0023	3.2477	3.2327	3.1665	3.1590	3.0943	2B	3.115	3.140	3.1688	3.1786	3.2500
	NS	2	0.0000	3.2500	3.2348	3.1688	3.1603	3.0966	2	3.1147	3.1282	3.1688	3.1773	3.2500
		3	0.0000	3.2500	3.2348	3.1688	3.1629	3.0966	3	3.1147	3.1282	3.1688	3.1748	3.2500
3-1/4 - 10	NS	2A	0.0020	3.2480	3.2351	3.1830	3.1762	3.1253	2B	3.142	3.163	3.1850	3.1939	3.2500
		2	0.0000	3.2500	3.2372	3.1850	3.1772	3.1273	2	3.1417	3.1525	3.1850	3.1928	3.2500
		3	0.0000	3.2500	3.2372	3.1850	3.1795	3.1273	3	3.1417	3.1525	3.1850	3.1905	3.2500
3-1/4 - 14	NS	2A	0.0018	3.2482	3.2379	3.2018	3.1959	3.1606	2B	3.173	3.188	3.2036	3.2113	3.2500
		2	0.0000	3.2500	3.2402	3.2036	3.1966	3.1624	2	3.1727	3.1812	3.2036	3.2106	3.2500
		3	0.0000	3.2500	3.2402	3.2036	3.1987	3.1624	3	3.1727	3.1812	3.2036	3.2085	3.2500
3-1/4 - 18	NS	2A	0.0016	3.2484	3.2397	3.2123	3.2069	3.1802	2B	3.190	3.203	3.2139	3.2209	3.2500
		2	0.0000	3.2500	3.2418	3.2139	3.2074	3.1818	2	3.1899	3.1975	3.2139	3.2204	3.2500
		3	0.0000	3.2500	3.2418	3.2139	3.2094	3.1818	3	3.1899	3.1975	3.2139	3.2184	3.2500
3-1/2 - 6	UNS	2A	0.0026	3.4974	3.4792	3.3891	3.3804	3.2929	2B	3.320	3.350	3.3917	3.4030	3.5000
	NS	2	0.0000	3.5000	3.4798	3.3917	3.3819	3.2955	2	3.3196	3.3376	3.3917	3.4015	3.5000
		3	0.0000	3.5000	3.4798	3.3917	3.3848	3.2955	3	3.3196	3.3376	3.3917	3.3986	3.5000
3-1/2 - 8	UNS	2A	0.0023	3.4977	3.4827	3.4165	3.4089	3.3443	2B	3.365	3.390	3.4188	3.4287	3.5000
	NS	2	0.0000	3.5000	3.4848	3.4188	3.4100	3.3466	2	3.3647	3.3782	3.4188	3.4276	3.5000
		3	0.0000	3.5000	3.4848	3.4188	3.4127	3.3466	3	3.3647	3.3782	3.4188	3.4249	3.5000
3-1/2 - 10	NS	2A	0.0021	3.4979	3.4850	3.4329	3.4260	3.3752	2B	3.392	3.413	3.4350	3.4440	3.5000
		2	0.0000	3.5000	3.4872	3.4350	3.4269	3.3773	2	3.3917	3.4025	3.4350	3.4431	3.5000
		3	0.0000	3.5000	3.4872	3.4350	3.4293	3.3773	3	3.3917	3.4025	3.4350	3.4407	3.5000
3-1/2 - 14	NS	2A	0.0018	3.4982	3.4879	3.4518	3.4457	3.4106	2B	3.423	3.438	3.4536	3.4615	3.5000
		2	0.0000	3.5000	3.4902	3.4536	3.4463	3.4124	2	3.4227	3.4312	3.4536	3.4609	3.5000
		3	0.0000	3.5000	3.4902	3.4536	3.4485	3.4124	3	3.4227	3.4312	3.4536	3.4587	3.5000
3-1/2 - 18	NS	2A	0.0017	3.4983	3.4896	3.4622	3.4567	3.4301	2B	3.440	3.453	3.4639	3.4711	3.5000
		2	0.0000	3.5000	3.4918	3.4639	3.4571	3.4318	2	3.4399	3.4475	3.4639	3.4707	3.5000
		3	0.0000	3.5000	3.4918	3.4639	3.4592	3.4318	3	3.4399	3.4475	3.4639	3.4686	3.5000
3-3/4 - 6	UNS	2A	0.0026	3.7474	3.7292	3.6391	3.6304	3.5429	2B	3.570	3.600	3.6417	3.6530	3.7500
	NS	2	0.0000	3.7500	3.7298	3.6417	3.6319	3.5455	2	3.5696	3.5876	3.6417	3.6515	3.7500
		3	0.0000	3.7500	3.7298	3.6417	3.6348	3.5455	3	3.5696	3.5876	3.6417	3.6486	3.7500
3-3/4 - 8	UNS	2A	0.0023	3.7477	3.7327	3.6665	3.6589	3.5943	2B	3.615	3.640	3.6688	3.6787	3.7500
	NS	2	0.0000	3.7500	3.7348	3.6688	3.6600	3.5966	2	3.6147	3.6282	3.6688	3.6776	3.7500
		3	0.0000	3.7500	3.7348	3.6688	3.6627	3.5966	3	3.6147	3.6282	3.6688	3.6749	3.7500
3-3/4 - 10	NS	2A	0.0021	3.7479	3.7350	3.6829	3.6760	3.6252	2B	3.642	3.663	3.6850	3.6940	3.7500
		2	0.0000	3.7500	3.7372	3.6850	3.6769	3.6273	2	3.6417	3.6525	3.6850	3.6931	3.7500
		3	0.0000	3.7500	3.7372	3.6850	3.6793	3.6273	3	3.6417	3.6525	3.6850	3.6907	3.7500

a See Figure 1.
b For Class 2A, the maximum is increased by the amount of the allowance if the threads have an additive finish such as plating or coating.
c The juxtaposition of external and internal thread classes in this table does not indicate that they must be used in combination. See Section 4.
d Revised minor diameter limits of Classes 1B and 2B are in process of ratification as Unified standard.

UNIFIED AND AMERICAN SCREW THREADS

TABLE 3 (CONTINUED) LIMITING DIMENSIONS FOR SELECTED COMBINATIONS OF SPECIAL SERIES THREADS

Nominal Size and Threads Per Inch	Designation	EXTERNAL[c]							INTERNAL[c]					
		Class	Allowance	Major Diameter		Pitch Diameter		Minor Dia.[a]	Class	Minor Diameter[d]		Pitch Diameter		Major Dia.
				Max.[b]	Min.	Max.[b]	Min.			Min.	Max.	Min.	Max.	Min.
3-3/4 - 14	NS	2A	0.0018	3.7482	3.7379	3.7018	3.6957	3.6606	2B	3.673	3.688	3.7036	3.7115	3.7500
		2	0.0000	3.7500	3.7402	3.7036	3.6963	3.6624	2	3.6727	3.6812	3.7036	3.7109	3.7500
		3	0.0000	3.7500	3.7402	3.7036	3.6985	3.6624	3	3.6727	3.6812	3.7036	3.7087	3.7500
3-3/4 - 18	NS	2A	0.0017	3.7483	3.7396	3.7122	3.7067	3.6801	2B	3.690	3.703	3.7139	3.7211	3.7500
		2	0.0000	3.7500	3.7418	3.7139	3.7071	3.6818	2	3.6899	3.6975	3.7139	3.7207	3.7500
		3	0.0000	3.7500	3.7418	3.7139	3.7092	3.6818	3	3.6899	3.6975	3.7139	3.7186	3.7500
4 - 6	UNS	2A	0.0026	3.9974	3.9792	3.8891	3.8803	3.7929	2B	3.820	3.850	3.8917	3.9031	4.0000
	NS	2	0.0000	4.0000	3.9798	3.8917	3.8816	3.7955	2	3.8196	3.8376	3.8917	3.9018	4.0000
		3	0.0000	4.0000	3.9798	3.8917	3.8846	3.7955	3	3.8196	3.8376	3.8917	3.8988	4.0000
4 - 8	UNS	2A	0.0023	3.9977	3.9827	3.9165	3.9088	3.8443	2B	3.865	3.890	3.9188	3.9288	4.0000
	NS	2	0.0000	4.0000	3.9848	3.9188	3.9098	3.8466	2	3.8647	3.8782	3.9188	3.9278	4.0000
		3	0.0000	4.0000	3.9848	3.9188	3.9125	3.8466	3	3.8647	3.8782	3.9188	3.9251	4.0000
4 - 10	NS	2A	0.0021	3.9979	3.9850	3.9329	3.9259	3.8752	2B	3.892	3.913	3.9350	3.9441	4.0000
		2	0.0000	4.0000	3.9872	3.9350	3.9266	3.8773	2	3.8917	3.9025	3.9350	3.9434	4.0000
		3	0.0000	4.0000	3.9872	3.9350	3.9291	3.8773	3	3.8917	3.9025	3.9350	3.9409	4.0000
4 - 14	NS	2A	0.0018	3.9982	3.9879	3.9518	3.9456	3.9106	2B	3.923	3.938	3.9536	3.9616	4.0000
		2	0.0000	4.0000	3.9902	3.9536	3.9461	3.9124	2	3.9227	3.9312	3.9536	3.9611	4.0000
		3	0.0000	4.0000	3.9902	3.9536	3.9483	3.9124	3	3.9227	3.9312	3.9536	3.9589	4.0000
4-1/4 - 4	UNS	2A	0.0032	4.2468	4.2230	4.0844	4.0738	3.9401	2B	3.979	4.017	4.0876	4.1014	4.2500
	NS	2	0.0000	4.2500	4.2220	4.0876	4.0756	3.9433	2	3.9794	4.0065	4.0876	4.0996	4.2500
		3	0.0000	4.2500	4.2220	4.0876	4.0792	3.9433	3	3.9794	4.0065	4.0876	4.0960	4.2500
4-1/4 - 6	UNS	2A	0.0026	4.2474	4.2292	4.1391	4.1303	4.0429	2B	4.070	4.100	4.1417	4.1531	4.2500
	NS	2	0.0000	4.2500	4.2298	4.1417	4.1316	4.0455	2	4.0696	4.0876	4.1417	4.1518	4.2500
		3	0.0000	4.2500	4.2298	4.1417	4.1346	4.0455	3	4.0696	4.0876	4.1417	4.1488	4.2500
4-1/4 - 8	UNS	2A	0.0023	4.2477	4.2327	4.1665	4.1588	4.0943	2B	4.115	4.140	4.1688	4.1788	4.2500
	NS	2	0.0000	4.2500	4.2348	4.1688	4.1598	4.0966	2	4.1147	4.1282	4.1688	4.1778	4.2500
		3	0.0000	4.2500	4.2348	4.1688	4.1625	4.0966	3	4.1147	4.1282	4.1688	4.1751	4.2500
4-1/4 - 10	NS	2A	0.0021	4.2479	4.2350	4.1829	4.1759	4.1252	2B	4.142	4.163	4.1850	4.1941	4.2500
		2	0.0000	4.2500	4.2372	4.1850	4.1766	4.1273	2	4.1417	4.1525	4.1850	4.1934	4.2500
		3	0.0000	4.2500	4.2372	4.1850	4.1791	4.1273	3	4.1417	4.1525	4.1850	4.1909	4.2500
4-1/4 - 14	NS	2A	0.0018	4.2482	4.2379	4.2018	4.1956	4.1606	2B	4.173	4.188	4.2036	4.2116	4.2500
		2	0.0000	4.2500	4.2402	4.2036	4.1961	4.1624	2	4.1727	4.1812	4.2036	4.2111	4.2500
		3	0.0000	4.2500	4.2402	4.2036	4.1983	4.1624	3	4.1727	4.1812	4.2036	4.2089	4.2500
4-1/2 - 4	UNS	2A	0.0032	4.4968	4.4730	4.3344	4.3238	4.1901	2B	4.229	4.267	4.3376	4.3514	4.5000

a See Figure 1.
b For Class 2A, the maximum is increased by the amount of the allowance if the threads have an additive finish such as plating or coating.
c The juxtaposition of external and internal thread classes in this table does not indicate that they must be used in combination. See Section 4.
d Revised minor diameter limits of Classes 1B and 2B are in process of ratification as Unified standard.

UNIFIED AND AMERICAN SCREW THREADS

TABLE 3 (CONTINUED) LIMITING DIMENSIONS FOR SELECTED COMBINATIONS OF SPECIAL SERIES THREADS

Nominal Size and Threads Per Inch	Designation	EXTERNAL[c]							INTERNAL[c]					
		Class	Allowance	Major Diameter		Pitch Diameter		Minor Dia.[a]	Class	Minor Diameter[d]		Pitch Diameter		Major Dia.
				Max.[b]	Min.	Max.[b]	Min.			Min.	Max.	Min.	Max.	Min.
4-1/2 - 4	NS	2	0.0000	4.5000	4.4720	4.3376	4.3256	4.1933	2	4.2294	4.2565	4.3376	4.3496	4.5000
		3	0.0000	4.5000	4.4720	4.3376	4.3292	4.1933	3	4.2294	4.2565	4.3376	4.3460	4.5000
4-1/2 - 6	UNS	2A	0.0026	4.4974	4.4792	4.3891	4.3803	4.2929	2B	4.320	4.350	4.3917	4.4031	4.5000
	NS	2	0.0000	4.5000	4.4798	4.3917	4.3816	4.2955	2	4.3196	4.3376	4.3917	4.4018	4.5000
		3	0.0000	4.5000	4.4798	4.3917	4.3846	4.2955	3	4.3196	4.3376	4.3917	4.3988	4.5000
4-1/2 - 8	UNS	2A	0.0023	4.4977	4.4827	4.4165	4.4088	4.3443	2B	4.365	4.390	4.4188	4.4288	4.5000
	NS	2	0.0000	4.5000	4.4848	4.4188	4.4098	4.3466	2	4.3647	4.3782	4.4188	4.4278	4.5000
		3	0.0000	4.5000	4.4848	4.4188	4.4125	4.3466	3	4.3647	4.3782	4.4188	4.4251	4.5000
4-1/2 - 10	NS	2A	0.0021	4.4979	4.4850	4.4329	4.4259	4.3752	2B	4.392	4.413	4.4350	4.4441	4.5000
		2	0.0000	4.5000	4.4872	4.4350	4.4266	4.3773	2	4.3917	4.4025	4.4350	4.4434	4.5000
		3	0.0000	4.5000	4.4872	4.4350	4.4291	4.3773	3	4.3917	4.4025	4.4350	4.4409	4.5000
4-1/2 - 14	NS	2A	0.0018	4.4982	4.4879	4.4518	4.4456	4.4106	2B	4.423	4.438	4.4536	4.4616	4.5000
		2	0.0000	4.5000	4.4902	4.4536	4.4461	4.4124	2	4.4227	4.4312	4.4536	4.4611	4.5000
		3	0.0000	4.5000	4.4902	4.4536	4.4483	4.4124	3	4.4227	4.4312	4.4536	4.4589	4.5000
4-3/4 - 4	UNS	2A	0.0032	4.7468	4.7230	4.5844	4.5736	4.4401	2B	4.479	4.517	4.5876	4.6016	4.7500
	NS	2	0.0000	4.7500	4.7220	4.5876	4.5751	4.4433	2	4.4794	4.5065	4.5876	4.6001	4.7500
		3	0.0000	4.7500	4.7220	4.5876	4.5789	4.4433	3	4.4794	4.5065	4.5876	4.5963	4.7500
4-3/4 - 6	UNS	2A	0.0027	4.7473	4.7291	4.6390	4.6301	4.5428	2B	4.570	4.600	4.6417	4.6533	4.7500
	NS	2	0.0000	4.7500	4.7298	4.6417	4.6312	4.5455	2	4.5696	4.5876	4.6417	4.6522	4.7500
		3	0.0000	4.7500	4.7298	4.6417	4.6343	4.5455	3	4.5696	4.5876	4.6417	4.6491	4.7500
4-3/4 - 8	UNS	2A	0.0024	4.7476	4.7326	4.6664	4.6585	4.5942	2B	4.615	4.640	4.6688	4.6791	4.7500
	NS	2	0.0000	4.7500	4.7348	4.6688	4.6593	4.5966	2	4.6147	4.6282	4.6688	4.6783	4.7500
		3	0.0000	4.7500	4.7348	4.6688	4.6621	4.5966	3	4.6147	4.6282	4.6688	4.6755	4.7500
4-3/4 - 10	NS	2A	0.0022	4.7478	4.7349	4.6828	4.6756	4.6251	2B	4.642	4.663	4.6850	4.6944	4.7500
		2	0.0000	4.7500	4.7372	4.6850	4.6762	4.6273	2	4.6417	4.6525	4.6850	4.6938	4.7500
		3	0.0000	4.7500	4.7372	4.6850	4.6788	4.6273	3	4.6417	4.6525	4.6850	4.6912	4.7500
4-3/4 - 14	NS	2A	0.0019	4.7481	4.7378	4.7017	4.6953	4.6605	2B	4.673	4.688	4.7036	4.7119	4.7500
		2	0.0000	4.7500	4.7402	4.7036	4.6956	4.6624	2	4.6727	4.6812	4.7036	4.7106	4.7500
		3	0.0000	4.7500	4.7402	4.7036	4.6980	4.6624	3	4.6727	4.6812	4.7036	4.7092	4.7500
5 - 4	UNS	2A	0.0032	4.9968	4.9730	4.8344	4.8236	4.6901	2B	4.729	4.767	4.8376	4.8516	5.0000
	NS	2	0.0000	5.0000	4.9720	4.8376	4.8251	4.6933	2	4.7294	4.7565	4.8376	4.8501	5.0000
		3	0.0000	5.0000	4.9720	4.8376	4.8289	4.6933	3	4.7294	4.7565	4.8376	4.8463	5.0000
5 - 6	UNS	2A	0.0027	4.9973	4.9791	4.8890	4.8801	4.7928	2B	4.820	4.850	4.8917	4.9033	5.0000
	NS	2	0.0000	5.0000	4.9798	4.8917	4.8812	4.7955	2	4.8196	4.8376	4.8917	4.9022	5.0000
		3	0.0000	5.0000	4.9798	4.8917	4.8843	4.7955	3	4.8196	4.8376	4.8917	4.8991	5.0000

a See Figure 1.
b For Class 2A, the maximum is increased by the amount of the allowance if the threads have an additive finish such as plating or coating.
c The juxtaposition of external and internal thread classes in this table does not indicate that they must be used in combination. See Section 4.
d Revised minor diameter limits of Classes 1B and 2B are in process of ratification as Unified standard.

UNIFIED AND AMERICAN SCREW THREADS

TABLE 3 (CONTINUED) LIMITING DIMENSIONS FOR SELECTED COMBINATIONS OF SPECIAL SERIES THREADS

Nominal Size and Threads Per Inch	Designation	EXTERNAL[c]							INTERNAL[c]					
		Class	Allowance	Major Diameter		Pitch Diameter		Minor Dia.[a]	Class	Minor Diameter[d]		Pitch Diameter		Major Dia.
				Max.[b]	Min.	Max.[b]	Min.			Min.	Max.	Min.	Max.	Min.
5 - 8	UNS	2A	0.0024	4.9976	4.9826	4.9164	4.9085	4.8442	2B	4.865	4.890	4.9188	4.9291	5.0000
	NS	2	0.0000	5.0000	4.9848	4.9188	4.9093	4.8466	2	4.8647	4.8782	4.9188	4.9283	5.0000
		3	0.0000	5.0000	4.9848	4.9188	4.9121	4.8466	3	4.8647	4.8782	4.9188	4.9255	5.0000
5 - 10	NS	2A	0.0022	4.9978	4.9849	4.9328	4.9256	4.8751	2B	4.892	4.913	4.9350	4.9444	5.0000
		2	0.0000	5.0000	4.9872	4.9350	4.9262	4.8773	2	4.8917	4.9025	4.9350	4.9438	5.0000
		3	0.0000	5.0000	4.9872	4.9350	4.9288	4.8773	3	4.8917	4.9025	4.9350	4.9412	5.0000
5 - 14	NS	2A	0.0019	4.9981	4.9878	4.9517	4.9453	4.9105	2B	4.923	4.938	4.9536	4.9619	5.0000
		2	0.0000	5.0000	4.9902	4.9536	4.9456	4.9124	2	4.9227	4.9312	4.9536	4.9616	5.0000
		3	0.0000	5.0000	4.9902	4.9536	4.9480	4.9124	3	4.9227	4.9312	4.9536	4.9592	5.0000
5-1/4 - 4	UNS	2A	0.0032	5.2468	5.2230	5.0844	5.0736	4.9401	2B	4.979	5.017	5.0876	5.1016	5.2500
	NS	2	0.0000	5.2500	5.2220	5.0876	5.0751	4.9433	2	4.9794	5.0065	5.0876	5.1001	5.2500
		3	0.0000	5.2500	5.2220	5.0876	5.0789	4.9433	3	4.9794	5.0065	5.0876	5.0963	5.2500
5-1/4 - 6	UNS	2A	0.0027	5.2473	5.2291	5.1390	5.1301	5.0428	2B	5.070	5.100	5.1417	5.1533	5.2500
	NS	2	0.0000	5.2500	5.2298	5.1417	5.1312	5.0455	2	5.0696	5.0876	5.1417	5.1522	5.2500
		3	0.0000	5.2500	5.2298	5.1417	5.1343	5.0455	3	5.0696	5.0876	5.1417	5.1491	5.2500
5-1/4 - 8	UNS	2A	0.0024	5.2476	5.2326	5.1664	5.1585	5.0942	2B	5.115	5.140	5.1688	5.1791	5.2500
	NS	2	0.0000	5.2500	5.2348	5.1688	5.1593	5.0966	2	5.1147	5.1282	5.1688	5.1783	5.2500
		3	0.0000	5.2500	5.2348	5.1688	5.1621	5.0966	3	5.1147	5.1282	5.1688	5.1755	5.2500
5-1/4 - 10	NS	2A	0.0022	5.2478	5.2349	5.1828	5.1756	5.1251	2B	5.142	5.163	5.1850	5.1944	5.2500
		2	0.0000	5.2500	5.2372	5.1850	5.1762	5.1273	2	5.1417	5.1525	5.1850	5.1938	5.2500
		3	0.0000	5.2500	5.2372	5.1850	5.1788	5.1273	3	5.1417	5.1525	5.1850	5.1912	5.2500
5-1/4 - 14	NS	2A	0.0019	5.2481	5.2378	5.2017	5.1953	5.1605	2B	5.173	5.188	5.2036	5.2119	5.2500
		2	0.0000	5.2500	5.2402	5.2036	5.1956	5.1624	2	5.1727	5.1812	5.2036	5.2116	5.2500
		3	0.0000	5.2500	5.2402	5.2036	5.1980	5.1624	3	5.1727	5.1812	5.2036	5.2092	5.2500
5-1/2 - 4	UNS	2A	0.0032	5.4968	5.4730	5.3344	5.3236	5.1901	2B	5.229	5.267	5.3376	5.3516	5.5000
	NS	2	0.0000	5.5000	5.4720	5.3376	5.3251	5.1933	2	5.2294	5.2565	5.3376	5.3501	5.5000
		3	0.0000	5.5000	5.4720	5.3376	5.3289	5.1933	3	5.2294	5.2565	5.3376	5.3463	5.5000
5-1/2 - 6	UNS	2A	0.0027	5.4973	5.4791	5.3890	5.3801	5.2928	2B	5.320	5.350	5.3917	5.4033	5.5000
	NS	2	0.0000	5.5000	5.4798	5.3917	5.3812	5.2955	2	5.3196	5.3376	5.3917	5.4022	5.5000
		3	0.0000	5.5000	5.4798	5.3917	5.3843	5.2955	3	5.3196	5.3376	5.3917	5.3991	5.5000
5-1/2 - 8	UNS	2A	0.0024	5.4976	5.4826	5.4164	5.4085	5.3442	2B	5.365	5.390	5.4188	5.4291	5.5000
	NS	2	0.0000	5.5000	5.4848	5.4188	5.4093	5.3466	2	5.3647	5.3782	5.4188	5.4283	5.5000
		3	0.0000	5.5000	5.4848	5.4188	5.4121	5.3466	3	5.3647	5.3782	5.4188	5.4255	5.5000
5-1/2 - 10	NS	2A	0.0022	5.4978	5.4849	5.4328	5.4256	5.3751	2B	5.392	5.413	5.4350	5.4444	5.5000

a See Figure 1.
b For Class 2A, the maximum is increased by the amount of the allowance if the threads have an additive finish such as plating or coating.
c The juxtaposition of external and internal thread classes in this table does not indicate that they must be used in combination. See Section 4.
d Revised minor diameter limits of Classes 1B and 2B are in process of ratification as Unified standard.

UNIFIED AND AMERICAN SCREW THREADS

TABLE 3 (CONTINUED) LIMITING DIMENSIONS FOR SELECTED COMBINATIONS OF SPECIAL SERIES THREADS

Nominal Size and Threads Per Inch	Designation	EXTERNAL[c]							INTERNAL[c]					
		Class	Allowance	Major Diameter		Pitch Diameter		Minor Dia.[a]	Class	Minor Diameter[d]		Pitch Diameter		Major Dia.
				Max.[b]	Min.	Max.[b]	Min.			Min.	Max.	Min.	Max.	Min.
5-1/2 - 10	NS	2	0.0000	5.5000	5.4872	5.4350	5.4262	5.3773	2	5.3917	5.4025	5.4350	5.4438	5.5000
		3	0.0000	5.5000	5.4872	5.4350	5.4288	5.3773	3	5.3917	5.4025	5.4350	5.4412	5.5000
5-1/2 - 14	NS	2A	0.0019	5.4981	5.4878	5.4517	5.4453	5.4105	2B	5.423	5.438	5.4536	5.4619	5.5000
		2	0.0000	5.5000	5.4902	5.4536	5.4456	5.4124	2	5.4227	5.4312	5.4536	5.4616	5.5000
		3	0.0000	5.5000	5.4902	5.4536	5.4480	5.4124	3	5.4227	5.4312	5.4536	5.4592	5.5000
5-3/4 - 4	UNS	2A	0.0033	5.7467	5.7229	5.5843	5.5734	5.4400	2B	5.479	5.517	5.5876	5.6018	5.7500
	NS	2	0.0000	5.7500	5.7220	5.5876	5.5747	5.4433	2	5.4794	5.5065	5.5876	5.6005	5.7500
		3	0.0000	5.7500	5.7220	5.5876	5.5786	5.4433	3	5.4794	5.5065	5.5876	5.5966	5.7500
5-3/4 - 6	UNS	2A	0.0027	5.7473	5.7291	5.6390	5.6299	5.5428	2B	5.570	5.600	5.6417	5.6535	5.7500
	NS	2	0.0000	5.7500	5.7298	5.6417	5.6307	5.5455	2	5.5696	5.5876	5.6417	5.6527	5.7500
		3	0.0000	5.7500	5.7298	5.6417	5.6340	5.5455	3	5.5696	5.5876	5.6417	5.6494	5.7500
5-3/4 - 8	UNS	2A	0.0024	5.7476	5.7326	5.6664	5.6583	5.5942	2B	5.615	5.640	5.6688	5.6793	5.7500
	NS	2	0.0000	5.7500	5.7348	5.6688	5.6589	5.5966	2	5.6147	5.6282	5.6688	5.6787	5.7500
		3	0.0000	5.7500	5.7348	5.6688	5.6618	5.5966	3	5.6147	5.6282	5.6688	5.6758	5.7500
5-3/4 - 10	NS	2A	0.0022	5.7478	5.7349	5.6828	5.6754	5.6251	2B	5.642	5.663	5.6850	5.6946	5.7500
		2	0.0000	5.7500	5.7372	5.6850	5.6757	5.6273	2	5.6417	5.6525	5.6850	5.6943	5.7500
		3	0.0000	5.7500	5.7372	5.6850	5.6785	5.6273	3	5.6417	5.6525	5.6850	5.6915	5.7500
5-3/4 - 14	NS	2A	0.0020	5.7480	5.7377	5.7016	5.6951	5.6604	2B	5.673	5.688	5.7036	5.7121	5.7500
		2	0.0000	5.7500	5.7402	5.7036	5.6952	5.6624	2	5.6727	5.6812	5.7036	5.7120	5.7500
		3	0.0000	5.7500	5.7402	5.7036	5.6977	5.6624	3	5.6727	5.6812	5.7036	5.7095	5.7500
6 - 4	UNS	2A	0.0033	5.9967	5.9729	5.8343	5.8234	5.6900	2B	5.729	5.767	5.8376	5.8518	6.0000
	NS	2	0.0000	6.0000	5.9720	5.8376	5.8247	5.6933	2	5.7294	5.7565	5.8376	5.8505	6.0000
		3	0.0000	6.0000	5.9720	5.8376	5.8286	5.6933	3	5.7294	5.7565	5.8376	5.8466	6.0000
6 - 6	UNS	2A	0.0027	5.9973	5.9791	5.8890	5.8799	5.7928	2B	5.820	5.850	5.8917	5.9035	6.0000
	NS	2	0.0000	6.0000	5.9798	5.8917	5.8807	5.7955	2	5.8196	5.8376	5.8917	5.9027	6.0000
		3	0.0000	6.0000	5.9798	5.8917	5.8840	5.7955	3	5.8196	5.8376	5.8917	5.8994	6.0000
6 - 8	UNS	2A	0.0024	5.9976	5.9826	5.9164	5.9083	5.8442	2B	5.865	5.890	5.9188	5.9293	6.0000
	NS	2	0.0000	6.0000	5.9848	5.9188	5.9089	5.8466	2	5.8647	5.8782	5.9188	5.9287	6.0000
		3	0.0000	6.0000	5.9848	5.9188	5.9118	5.8466	3	5.8647	5.8782	5.9188	5.9258	6.0000
6 - 10	NS	2A	0.0022	5.9978	5.9849	5.9328	5.9254	5.8751	2B	5.892	5.913	5.9350	5.9446	6.0000
		2	0.0000	6.0000	5.9872	5.9350	5.9257	5.8773	2	5.8917	5.9025	5.9350	5.9443	6.0000
		3	0.0000	6.0000	5.9872	5.9350	5.9285	5.8773	3	5.8917	5.9025	5.9350	5.9415	6.0000
6 - 14	NS	2A	0.0020	5.9980	5.9877	5.9516	5.9451	5.9104	2B	5.923	5.938	5.9536	5.9621	6.0000
		2	0.0000	6.0000	5.9902	5.9536	5.9452	5.9124	2	5.9227	5.9312	5.9536	5.9620	6.0000
		3	0.0000	6.0000	5.9902	5.9536	5.9477	5.9124	3	5.9227	5.9312	5.9536	5.9595	6.0000

a See Figure 1.
b For Class 2A, the maximum is increased by the amount of the allowance if the threads have an additive finish such as plating or coating.
c The juxtaposition of external and internal thread classes in this table does not indicate that they must be used in combination. See Section 4.
d Revised minor diameter limits of Classes 1B and 2B are in process of ratification as Unified standard.

UNIFIED AND AMERICAN SCREW THREADS-APPENDIX A

TERMINOLOGY AND SYMBOLS

TERMS RELATING TO TYPES OF SCREW THREADS

SCREW THREAD. A screw thread (hereinafter referred to as a thread) is a ridge of uniform section in the form of a helix on the external or internal surface of a cylinder or in the form of a conical spiral on the external or internal surface of a cone or frustum of a cone. A thread formed on a cylinder is known as a straight or parallel thread, to distinguish it from a taper thread which is formed on a cone or frustum of a cone.

EXTERNAL THREAD. An external thread is a thread on the external surface of a cylinder or cone.

INTERNAL THREAD. An internal thread is a thread on the internal surface of a hollow cylinder or cone.

RIGHT-HAND THREAD. A thread is a right-hand thread if, when viewed axially, it winds in a clockwise and receding direction.

LEFT-HAND THREAD. A thread is a left-hand thread if, when viewed axially, it winds in a counterclockwise and receding direction. All left-hand threads are disignated LH.

SINGLE THREAD. A single (single-start) thread is one having lead equal to the pitch.

MULTIPLE THREAD. A multiple (multiple-start) thread is one in which the lead is an integral multiple of the pitch.

CLASSES OF THREADS. Classes of threads are distinguished from each other by the amount of tolerance or tolerance and allowance specified.

TERMS RELATING TO SIZE AND FIT

NOMINAL SIZE. The nominal size is the designation used for the purpose of general identification.

DIMENSION. A dimension is a geometrical characteristic such as diameter, length, angle, or center distance.

SIZE. Size is a designation of magnitude. When a value is assigned to a dimension it is referred to hereinafter as the size of that dimension.

Note: It is recognized that the words "dimension" and size are both used at times to convey the meaning of magnitude.

ALLOWANCE. An allowance is an intentional difference between the maximum material limits of mating parts. It is the minimum clearance (positive allowance) or maximum interference (negative allowance) between such parts. (See definition of "Fit.")

TOLERANCE. A tolerance is the total permissible variation of a size. The tolerance is the difference between the limits of size.

BASIC SIZE. The basic size is that size from which the limits of size are derived by the application of allowances and tolerances.

DESIGN SIZE. The design size is that size from which the limits of size are derived by the application of tolerances. When there is no allowance the design size is the same as the basic size.

ACTUAL SIZE. An actual size is a measured size.

LIMITS OF SIZE. The limits of size are the applicable maximum and minimum sizes.

MAXIMUM MATERIAL LIMIT. A maximum material limit is the maximum limit of size of an external dimension or the minimum limit of size of an internal dimension.

MINIMUM MATERIAL LIMIT. A minimum material limit is the minimum limit of size of an external dimension or the maximum limit of size of an internal dimension.

TOLERANCE LIMIT. A tolerance limit is the variation, positive or negative, by which a size is permitted to depart from the design size.

UNILATERAL TOLERANCE. A unilateral tolerance is a tolerance in which variation is permitted only in one direction from the design size.

BILATERAL TOLERANCE. A bilateral tolerance is a tolerance in which variation is permitted in both directions from the design size.

UNILATERAL TOLERANCE SYSTEM. A design plan which uses only unilateral tolerances is known as a Unilateral Tolerance System.

BILATERAL TOLERANCE SYSTEM. A design plan which uses only bilateral tolerances is known as a Bilateral Tolerance System.

FIT. Fit is the general term used to signify the range of tightness which may result from the application of a specific combination of allowances and tolerances in the design of mating parts.

ACTUAL FIT. The actual fit between two mating parts is the relation existing between them with respect to the amount of clearance or interference which is present when they are assembled.

Note: Fits are of three general types: clearance, transition, and interference.

CLEARANCE FIT. A clearance fit is one having limits of size so prescribed that a clearance always results when mating parts are assembled.

INTERFERENCE FIT. An interference fit is one having

limits of size so prescribed that an interference always results when mating parts are assembled.

TRANSITION FIT. A transition fit is one having limits of size so prescribed that either a clearance or an interference may result when mating parts are assembled.

BASIC HOLE SYSTEM. A basic hole system is a system of fits in which the design size of the hole is the basic size and the allowance is applied to the shaft.

BASIC SHAFT SYSTEM. A basic shaft system is a system of fits in which the design size of the shaft is the basic size and the allowance is applied to the hole.

TERMS RELATING TO GEOMETRICAL ELEMENTS OF SCREW THREADS

AXIS. The axis of a thread is the axis of its pitch cylinder or cone.

PITCH LINE. The pitch line is a generator of the cylinder or cone specified in the definition of pitch-diameter.

FORM. The form of thread is its profile in an axial plane for a length of one pitch.

BASIC FORM OF THREAD. The basic form of a thread is the theoretical profile of the thread for a length of one pitch in an axial plane, on which the design forms of the threads for both the external and internal threads are based.

DESIGN FORM OF THREAD. The design forms for a thread are the maximum material forms permitted for the external and internal threads.

FUNDAMENTAL TRIANGLE. The fundamental triangle is the triangle whose corners coincide with three consecutive intersections of the extended flanks of the basic form.

FLANK. The flank (or side) of a thread is either surface connecting the crest with the root, the intersection of which, with an axial plane, is a straight line.

LEADING FLANK. The leading flank of a thread is the one which, when the thread is about to be assembled with a mating thread, faces the mating thread.

FOLLOWING FLANK. The following flank of a thread is the one which is opposite to the leading flank.

PRESSURE FLANK. The pressure flank is that which takes the thrust or load in an assembly. The term is used particularly in relation to buttress and other similar threads.

CLEARANCE (OR TRAILING) FLANK. The clearance flank is that which does not take the thrust or load in an assembly.

CREST. The crest is that surface of the thread which joins the flanks of the thread and is farthest from the cylinder or cone from which the thread projects.

ROOT. The root is that surface of the thread which joins the flanks of adjacent thread forms and is identical with or immediately adjacent to the cylinder or cone from which the thread projects.

SHARP CREST (OR CREST APEX). The sharp crest is the apex formed by the intersection of the flanks of a thread when extended, if necessary, beyond the crest.

SHARP ROOT (OR ROOT APEX). The sharp root is the apex formed by the intersection of the flanks of adjacent thread forms when extended, if necessary, beyond the root.

BASE. The base of a thread is that section of the thread which coincides with the cylinder or cone from which the thread projects.

COMPLETE THREAD. The complete (or full) thread is that part of the thread having full form at both crest and root. When there is a chamfer at the start of the thread, not exceeding two pitches in length on an external thread or one pitch in length on an internal thread, it is included within the length of complete thread. When designing threaded products, it is necessary to take cognizance of: (1) Such permissible length of chamfer and (2) the first three threads which by virtue of HI-LO gaging practice may exceed the product limits, which may be included within the length of complete thread. However, when the application is such as to require a minimum number of turns engagement, the specification shall so state and shall specify the minimum number of turns required.

INCOMPLETE THREAD. This is also known as the vanish or wash-out thread. On straight threads, the incomplete thread is that portion at the end having roots not fully formed by the lead or chamfer on threading tools.

EFFECTIVE THREAD. The effective (or useful) thread includes the complete thread and that portion of the incomplete thread having fully formed roots but having crests not fully formed.

TOTAL THREAD. The total thread includes the complete or effective thread and the incomplete thread.

VANISH CONE. The vanish cone is a cone, the surface of which would pass through the roots of the incomplete thread formed by the lead or chamfer of the threading tool.

VANISH POINT. The vanish point of an external thread is the intersection of a generator of the vanish cone with a generator of the cylinder of the largest major diameter of the thread.

BLUNT START. Blunt start designates the removal of the partial thread at the entering end of thread. This is

a feature of threaded parts which are repeatedly assembled by hand, such as hose couplings and thread plug gages, to prevent cutting of hands and crossing of threads, and which was formerly known as a Higbee cut.

TERMS RELATING TO DIMENSIONS OF SCREW THREADS

Terms relating to dimensions of both straight and taper threads are defined as follows:

PITCH. The pitch of a thread is the distance, measured parallel to its axis, between corresponding points on adjacent thread forms in the same axial plane and on the same side of the axis.

LEAD. The lead is the distance a threaded part moves axially, with respect to a fixed mating part, in one complete rotation.

THREADS PER INCH. The number of threads per inch is the reciprocal of the pitch in inches.

TURNS PER INCH. The number of turns per inch is the reciprocal of the lead in inches.

INCLUDED ANGLE. The included angle of a thread (or angle of thread) is the angle between the flanks of the thread measured in an axial plane.

FLANK ANGLE. The flank angles are the angles between the individual flanks and the perpendicular to the axis of the thread, measured in an axial plane. A flank angle of a symmetrical thread is commonly termed the half-angle of thread.

LEAD ANGLE. On a straight thread the lead angle is the angle made by the helix of the thread at the pitch line with a plane perpendicular to the axis. On a taper thread, the lead angle at a given position is the angle made by the conical spiral of the thread at the pitch line with the plane perpendicular to the axis at that position.

THICKNESS OF THREAD. The thickness of thread is the distance between the flanks of the thread measured at a specified position and parallel to the axis.

HEIGHT OF FUNDAMENTAL TRIANGLE. The height of the fundamental triangle of a thread, or the height of a sharp-V thread, is the distance, measured perpendicular to the axis, between the sharp major and minor cylinders or cones, respectively.

HEIGHT OF THREAD. The height (or depth) of thread is the distance, measured perpendicular to the axis, between the major and minor cylinders or cones, respectively.

ADDENDUM. The addendum of an external thread is the distance, measured perpendicular to the axis, between the major and pitch cylinders or cones, respectively. The addendum of an internal thread is the distance, measured perpendicular to the axis, between the minor and pitch cylinders or cones, respectively.

DEDENDUM. The dedendum of an external thread is the distance, measured perpendicular to the axis, between the pitch and minor cylinders or cones, respectively. The dedendum of an internal thread is the distance, measured perpendicular to the axis, between the major and pitch cylinders or cones, respectively.

CREST TRUNCATION. The crest truncation of a thread is the distance, measured perpendicular to the axis, between the sharp crest (or crest apex) and the cylinder or cone which bounds the crest.

ROOT TRUNCATION. The root truncation of a thread is the distance, measured perpendicular to the axis, between the sharp root (or root apex) and the cylinder or cone which bounds the root.

MAJOR DIAMETER. On a straight thread, the major diameter is the diameter of the coaxial cylinder which would pass through the crests of an external thread or the roots of an internal thread.

On a taper thread, the major diameter, at a given position on the thread axis, is the diameter of the major cone at that position.

MINOR DIAMETER. On a straight thread, the minor diameter is the diameter of the coaxial cylinder which would pass through the roots of an external thread or the crests of an internal thread.

On a taper thread, the minor diameter, at a given position on the thread axis, is the diameter of the minor cone at that position.

PITCH DIAMETER (SIMPLE EFFECTIVE DIAMETER). On a straight thread, the pitch diameter is the diameter of the coaxial cylinder, the surface of which would pass through the thread profiles at such points as to make the width of the groove equal to one-half of the basic pitch. On a perfect thread this occurs at the point where the widths of the thread and groove are equal.

On a taper thread, the pitch diameter at a given position on the thread axis is the diameter of the pitch cone at that position.

EFFECTIVE SIZE (OR VIRTUAL EFFECTIVE DIAMETER). The effective size of an external or internal thread is the diameter derived by adding to the pitch diameter in the case of an external thread, or subtracting from the pitch diameter in the case of an internal thread, the cumulative effects of deviations from specified profile, including variations in lead, in uniformity of helix, in flank angle, taper, out-of-roundness, and surface defects.

DEPTH OF THREAD ENGAGEMENT. The depth of thread engagement between two mating threads is the distance, measured perpendicular to the axis, by which their thread forms overlap each other.

LENGTH OF THREAD ENGAGEMENT. The length of thread engagement of two mating threads is the distance

between the extreme points of contact on the pitch cylinders or cones, measured parallel to the axis.

CREST CLEARANCE. The crest clearance in a thread assembly is the distance, measured perpendicular to the axis, between the crest of a thread and the root of its mating thread.

TENSILE STRESS AREA. The stress area is the assumed area of an externally threaded part which is used for the purpose of computing the tensile strength.

Tabulated stress areas in Appendix C applicable to steel parts are computed from the following formula:

$$A_s = 3.1416 \left(\frac{E}{2} - \frac{3H}{16}\right)^2$$

where: A_s = tensile stress area
E = basic pitch diameter, and is derived by subtracting twice the external thread addendum (See h_b, Table 4) from the basic major (nominal) diameter.
H = height of sharp V thread (See Table 4)

This formula correlates with test results for steels up to 100,000 psi ultimate strength.

For steels having ultimate strengths greater than 100,000 psi, it is recommended that the following formula be used to determine the stress area:

$$A_s = 3.1416 \left(\frac{E_{min}}{2} - \frac{3H}{16}\right)^2$$

where: E_{min} = minimum pitch diameter of the class of thread specified.

THREAD SHEAR AREA. The thread shear area of the external thread is the effective area at a diameter equal to the maximum minor diameter of the internal thread. The thread shear area of the internal thread is the effective area at a diameter equal to the minimum major diameter of the external thread. The formula for shear area of the external threads at a diameter equal to the maximum minor diameter of the internal thread (AS_s) is as follows:

$$AS_s = 3.1416 n L_e K_n max. \left[\frac{1}{2n} + 0.57735(E_s min. - K_n max.)\right]$$

where: n = number of threads per inch
L_e = length of engagement
$K_n max.$ = max. minor dia. of internal thread
$E_s min.$ = min. pitch dia. of external thread

The formula for shear area of the internal threads at a diameter equal to the minimum major diameter of external threads (AS_n) is as follows:

$$AS_n = 3.1416 n L_e D_s min. \left[\frac{1}{2n} + 0.57735(D_s min. - E_n max.)\right]$$

where: $D_s min.$ = min. major dia. of external thread
$E_n max.$ = max. pitch dia. of internal thread

As materials bearing the same name vary greatly in ultimate strength and in other essential characteristics, the formulas given below are included in order that a safe length of external thread mating with internal threads may be calculated. It is desirable that the length of internal thread and the dimensions of this thread, particularly its minor diameter, be such that, taking into account a possible difference in strength of material of the internal and external threads, the threaded portion of the external thread will break before either the external or internal threads strip. For this reason, the shearing strength of the assembled unit should be taken as 1/2 the tensile strength, which gives a small factor of safety.

The length of engagement of threaded unit which will develop maximum strength of an assembled threaded unit with external and internal thread manufactured of materials of equal tensile strength is computed from the following formula:

$$L_e = \frac{2 \times \text{Tensile Stress Area}}{3.1416 n K_n max. \left[\frac{1}{2n} + 0.57735(E_s min. - K_n max.)\right]}$$

This formula has the factor "1/2" for relation of shearing strength to tensile strength incorporated therein. The formula, while given for steel external and internal threads, may be used for brass external and internal threads and provides additional safety factor.

Where the external and internal threads are manufactured of materials of different tensile strength, the factor J for the relative strength in shear of external threads with respect to internal threads must be considered. The factor J is computed from the following formula:

$$J = \frac{AS_s \times \text{Tensile Strength of External Thread}}{AS_n \times \text{Tensile Strength of Internal Thread}}$$

The length of engagement of threaded unit adjusted to obtain proper relation of strength to cause breakage of bolt before threads will shear is Q and is computed from the following formulas:

If J is less than 1, $Q = L_e$

If J is greater than 1, $Q = J \times L_e$

UNIFIED AND AMERICAN SCREW THREADS-APPENDIX A

GENERAL SYMBOLS

Symbols	Dimensions	Remarks
D	Major diameter	Exception: B is used for basic major diameter when this differs from the nominal major diameter. Subscripts s or n indicating external or internal thread may be used if necessary.
E	Pitch diameter	Subscripts s or n indicating external or internal thread may be used if necessary.
K	Minor diameter	
p	Pitch	Equals 1/n.
l	Lead	Equals 1/N.
n	Number of threads per unit of length (per inch)	
N	Number of turns per unit of length (per inch)	
H	Height of fundamental triangle	
h	Height (or depth) of thread	Subscripts s or n indicating external or internal thread may be used if necessary.
h_a	Addendum	
h_d	Dedendum	
h_b	Equals, $2h_a$ of basic external thread	
h_e	Depth of thread engagement	
α	Half-angle of symmetrical thread	
α_1	Angle between leading flank of thread and normal to axis of thread	
α_2	Angle between following flank of thread and normal to axis of thread	
λ	Lead angle	$\text{Tan } \lambda = \frac{l}{\pi E}$
r	Radius of rounding at crest, or Radius of rounding at root	Subscripts c or r indicating crest or root, and s or n indicating external or internal thread may be used if necessary.
	Distance from apex of fundamental triangle to adjacent root or crest of thread:	
s	If rounded	
f	If flat	
	Distance from apex of fundamental triangle to:	
f_{cs}	Flat at crest of external thread	
f_{rs}	Flat at root of external thread	
f_{cn}	Flat at crest of internal thread	
f_{rn}	Flat at root of internal thread	
	Width of:	
F	Flat (general)	
F_{cs}	Flat at crest of external thread	
F_{rs}	Flat at root of external thread	
F_{cn}	Flat at crest of internal thread	
F_{rn}	Flat at root of internal thread	
L	Length of bolt or screw	
L_t	Length of full thread	Subscripts s or n indicating external or internal thread may be used if necessary.
L_e	Length of thread engagement	

UNIFIED AND AMERICAN SCREW THREADS-APPENDIX A

GENERAL SYMBOLS

Symbols	Dimensions	Remarks
w	Diameter of measuring wires	
M_w	Measurement over wires	
T	Measurement under wires	
C	Correction to measurement over wires to give pitch diameter	$E = M_w - C - c.$ $C = w(1 + \operatorname{cosec} \alpha) - (\cot \alpha)/2n.$
P	Correction to measurement under wires to give pitch diameter	$E = T + P - c.$ $P = 1/2p \cot \alpha - (\operatorname{cosec} \alpha - 1)w.$
λ_1	Wire angle	
c	Wire angle correction	See National Physical Laboratory "Notes on Screw Gages" August 1944, p. 23, or National Bureau of Standards Handbook H28 (1944) p. 228.
prefix symbol with δ	Error in any dimension	Examples: Error in pitch, δp; error in half-angle, $\delta \alpha_1$ or $\delta \alpha_2$.
ΔE_α	Pitch diameter equivalent of errors in flank angles	
ΔE_p	Pitch-diameter equivalent of error in pitch	
G	Allowance at pitch diameter	

GREEK ALPHABET

A	α	Alpha	H	η	Eta	N	ν	Nu	T	τ	Tau
B	β	Beta	Θ	θ	Theta	Ξ	ξ	Xi	Υ	υ	Upsilon
Γ	γ	Gamma	I	ι	Iota	O	o	Omicron	Φ	ϕ	Phi
Δ	δ	Delta	K	κ	Kappa	Π	π	Pi	X	χ	Chi
E	ϵ	Epsilon	Λ	λ	Lambda	P	ρ	Rho	Ψ	ψ	Psi
Z	ζ	Zeta	M	μ	Mu	Σ	σ	Sigma	Ω	ω	Omega

UNIFIED AND AMERICAN SCREW THREADS-APPENDIX B
THREAD FORM AND FORMULAS, UNIFIED AND AMERICAN

(See Figure 1 for thread form, Figure 2 for dimension symbols, and Table 4 for values)

Angle of thread: $2\alpha = 60^\circ$

Half angle of thread: $\alpha = 30^\circ$

Number of threads per inch: $n = \frac{1}{p}$

Pitch of thread: $p = \frac{1}{n}$

Height of sharp V thread: $H = 0.86603p = \frac{0.86603}{n}$

Height of external thread:* †† $h_s = 0.61343p = \frac{0.61343}{n} = \frac{17}{24}H$

Height of internal thread:†† $h_n = 0.54127p = \frac{0.54127}{n} = \frac{5}{8}H$

Depth of thread engagement: $h_e = 0.54127p = \frac{0.54127}{n}$

Flat at crest of external thread: $F_{cs} = 0.125p = \frac{0.125}{n} = \frac{p}{8}$

Truncation of external thread crest: $f_{cs} = 0.10825p = \frac{0.10825}{n} = \frac{H}{8}$

Truncation of external thread rounded root:* $s_{rs} = 0.14434p = \frac{0.14434}{n} = \frac{H}{6}$

Flat at crest of internal thread:†† $F_{cn} = 0.25p = \frac{0.25}{n} = \frac{p}{4}$

Truncation of internal thread crest: $f_{cn} = 0.21651p = \frac{0.21651}{n} = \frac{H}{4}$

Flat at root of internal thread: $F_{rn} = 0.125p = \frac{0.125}{n} = \frac{p}{8}$

Truncation of internal thread root: $f_{rn} = 0.10825p = \frac{0.10825}{n} = \frac{H}{8}$

Addendum of external thread: $h_{as} = 0.32476p = \frac{0.32476}{n} = \frac{3}{8}H$

Major diameter of external thread (nominal diameter):† D_s

Pitch diameter of external thread:** † $E_s = D - 2h_{as}$ ** $= D - 0.64952p = D - \frac{0.64952}{n}$

Minor diameter of external thread:†† $K_s = D_s - 2h_s = D_s - 1.22687p = D_s - \frac{1.22687}{n}$

Major diameter of internal thread:† D_n

Pitch diameter of internal thread:† E_n

Minor diameter of internal thread:†† $K_n = D_n - 2h_n = D_n - 1.08253p = D_n - \frac{1.08253}{n}$

* For calculating minor diameter values in tables.

** $2h_{as} = h_b$ = the basic height, h, of the original American National form.

† Because external and internal threads have the same basic major diameters and the same basic pitch diameters, the subscripts are omitted from D and E in subsequent references to these diameters.

†† Design form. (See Figure 1)

TABLE 4 – UNIFIED AND AMERICAN THREAD FORM DATA

Threads Per Inch n	Pitch p	Flat at Internal Thread Crest $F_{cn} = p/4 = 0.25p$	Flat at Internal Thread Root and External Thread Crest $F_{rn} = F_{cs} = p/8 = 0.125p$	Height of Sharp V Thread $H = 0.86603p$	Truncation of Internal Thread Root and External Thread Crest $f_{rn} = f_{cs} = H/8 = 0.10825p$	Truncation of External Thread Root $s_{rs} = H/6 = 0.14434p$	Half Addendum of External Thread $3/16\,H = 0.16238p$	Truncation of Internal Thread Crest $f_{cn} = H/4 = 0.21651p$	Addendum of External Thread $h_{as} = 3/8H = 0.32476p$	Height of Internal Thread and Depth of Thread Engagement $h_n = h_e = 5/8H = 0.54127p$	Height of External Thread $h_s = 17/24H = 0.61343p$	Twice the External Thread Addendum [a] $h_b = 2h_{as} = 3/4H = 0.64952p$	Difference Between Max. Major and Pitch Diameters of Internal Thread $11/12H = 0.79386p$	Double Height of Internal Thread $2h_n = 1\text{-}1/4H = 1.08253p$	Double Height of External Thread $1\text{-}5/12H = 1.22687p$
1	2	3	4	5	6	7	8	9	10	11	12	13	14	15	16
80	0.012500	0.00312	0.00156	0.01083	0.00135	0.00180	0.00203	0.00271	0.00406	0.00677	0.00767	0.00812	0.00992	0.01353	0.01534
72	0.013889	0.00347	0.00174	0.01203	0.00150	0.00200	0.00226	0.00301	0.00451	0.00752	0.00852	0.00902	0.01103	0.01504	0.01704
64	0.015625	0.00391	0.00195	0.01353	0.00169	0.00226	0.00254	0.00338	0.00507	0.00846	0.00958	0.01015	0.01240	0.01691	0.01917
56	0.017857	0.00446	0.00223	0.01546	0.00193	0.00258	0.00290	0.00387	0.00580	0.00967	0.01095	0.01160	0.01418	0.01933	0.02191
48	0.020833	0.00521	0.00260	0.01804	0.00226	0.00301	0.00338	0.00451	0.00677	0.01128	0.01278	0.01353	0.01654	0.02255	0.02556
44	0.022727	0.00568	0.00284	0.01968	0.00246	0.00328	0.00369	0.00492	0.00738	0.01230	0.01394	0.01476	0.01804	0.02460	0.02788
40	0.025000	0.00625	0.00312	0.02165	0.00271	0.00361	0.00406	0.00541	0.00812	0.01353	0.01534	0.01624	0.01985	0.02706	0.03067
36	0.027778	0.00694	0.00347	0.02406	0.00301	0.00401	0.00451	0.00601	0.00902	0.01504	0.01704	0.01804	0.02205	0.03007	0.03408
32	0.031250	0.00781	0.00391	0.02706	0.00338	0.00451	0.00507	0.00677	0.01015	0.01691	0.01917	0.02030	0.02481	0.03383	0.03834
28	0.035714	0.00893	0.00446	0.03093	0.00387	0.00515	0.00580	0.00773	0.01160	0.01933	0.02191	0.02320	0.02835	0.03866	0.04382
27	0.037037	0.00926	0.00463	0.03207	0.00401	0.00535	0.00601	0.00802	0.01203	0.02005	0.02272	0.02406	0.02940	0.04009	0.04544
24	0.041667	0.01042	0.00521	0.03608	0.00451	0.00601	0.00677	0.00902	0.01353	0.02255	0.02556	0.02706	0.03308	0.04511	0.05112
20	0.050000	0.01250	0.00625	0.04330	0.00541	0.00722	0.00812	0.01083	0.01624	0.02706	0.03067	0.03248	0.03969	0.05413	0.06134
18	0.055556	0.01389	0.00694	0.04811	0.00601	0.00802	0.00902	0.01203	0.01804	0.03007	0.03408	0.03608	0.04410	0.06014	0.06816
16	0.062500	0.01562	0.00781	0.05413	0.00677	0.00902	0.01015	0.01353	0.02030	0.03383	0.03834	0.04059	0.04962	0.06766	0.07668
14	0.071429	0.01786	0.00893	0.06186	0.00773	0.01031	0.01160	0.01546	0.02320	0.03866	0.04382	0.04639	0.05670	0.07732	0.08763
13	0.076923	0.01923	0.00962	0.06662	0.00833	0.01110	0.01249	0.01665	0.02498	0.04164	0.04719	0.04996	0.06107	0.08327	0.09437
12	0.083333	0.02083	0.01042	0.07217	0.00902	0.01203	0.01353	0.01804	0.02706	0.04511	0.05112	0.05413	0.06615	0.09021	0.10224
11½	0.086957	0.02174	0.01087	0.07531	0.00941	0.01255	0.01412	0.01883	0.02824	0.04707	0.05334	0.05648	0.06903	0.09413	0.10668
11	0.090909	0.02273	0.01136	0.07873	0.00984	0.01312	0.01476	0.01968	0.02952	0.04921	0.05577	0.05905	0.07217	0.09841	0.11153
10	0.100000	0.02500	0.01250	0.08660	0.01083	0.01443	0.01624	0.02165	0.03248	0.05413	0.06134	0.06495	0.07939	0.10825	0.12269
9	0.111111	0.02778	0.01389	0.09623	0.01203	0.01604	0.01804	0.02406	0.03608	0.06014	0.06816	0.07217	0.08821	0.12028	0.13632
8	0.125000	0.03125	0.01562	0.10825	0.01353	0.01804	0.02030	0.02706	0.04059	0.06766	0.07668	0.08119	0.09923	0.13532	0.15336
7	0.142857	0.03571	0.01786	0.12372	0.01546	0.02062	0.02320	0.03093	0.04639	0.07732	0.08763	0.09279	0.11341	0.15465	0.17527
6	0.166667	0.04167	0.02083	0.14434	0.01804	0.02406	0.02706	0.03608	0.05413	0.09021	0.10224	0.10825	0.13231	0.18042	0.20448
5	0.200000	0.05000	0.02500	0.17321	0.02165	0.02887	0.03248	0.04330	0.06495	0.10825	0.12269	0.12990	0.15877	0.21651	0.24537
4½	0.222222	0.05556	0.02778	0.19245	0.02406	0.03208	0.03608	0.04811	0.07217	0.12028	0.13632	0.14434	0.17641	0.24056	0.27264
4	0.250000	0.06250	0.03125	0.21651	0.02706	0.03608	0.04059	0.05413	0.08119	0.13532	0.15336	0.16238	0.19846	0.27063	0.30672

a Equivalent to the basic height, h, of the original American National Form. $h_{an} = f_{cn} = H/4$; $h_{dn} = h_{as} = 3/8H$. (See Figure 2)

UNIFIED AND AMERICAN SCREW THREADS-APPENDIX B

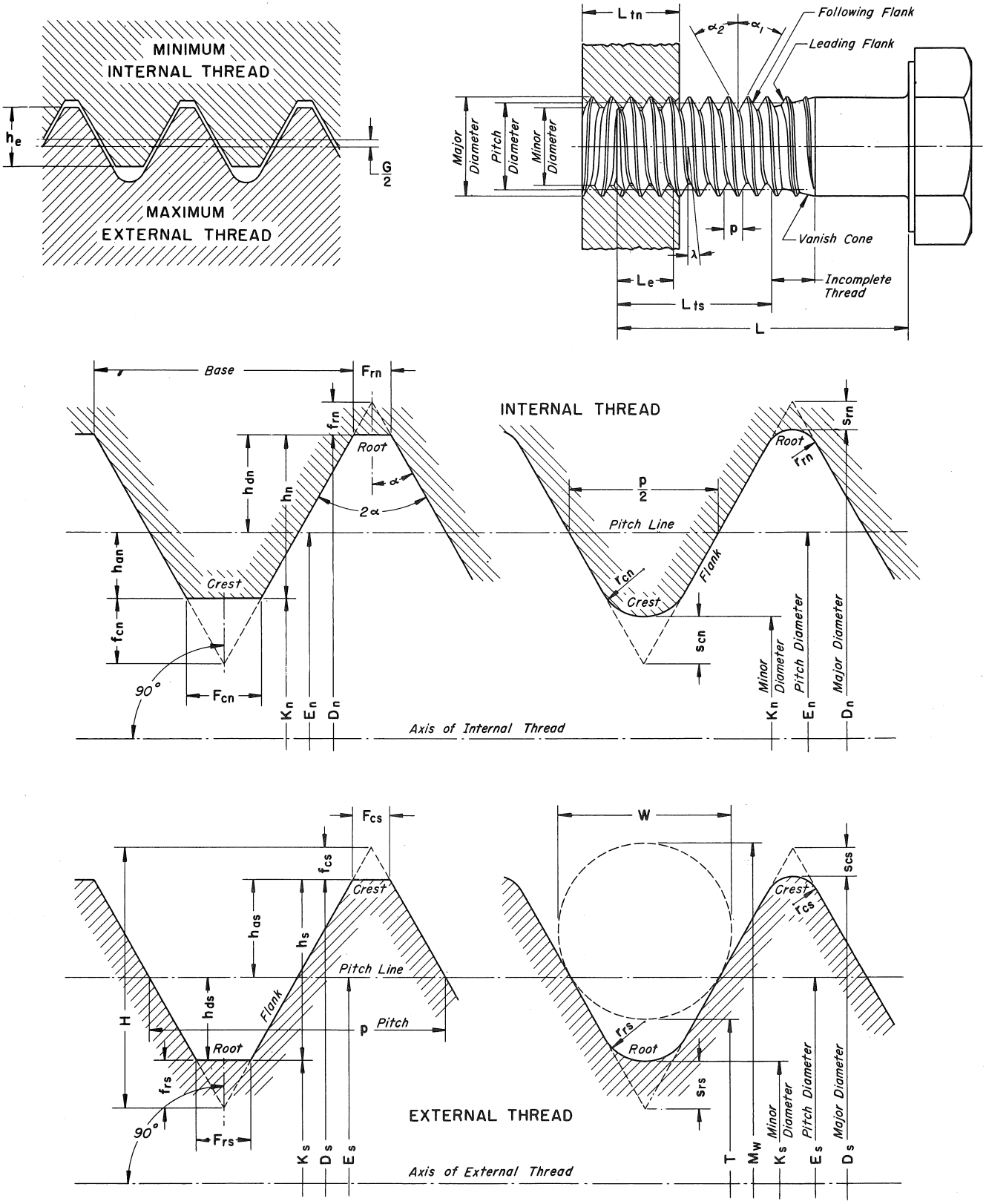

FIGURE 2 TERMINOLOGY AND SYMBOLS

(These drawings are not intended to illustrate thread forms but application of symbols only)

UNIFIED AND AMERICAN SCREW THREADS-APPENDIX C
TABLES OF BASIC DIMENSIONS OF STANDARD SERIES THREADS

TABLE 5 - BASIC DIMENSIONS FOR COARSE THREAD SERIES (UNC AND NC)

Nominal Size	Basic Major Diameter D	Threads Per Inch n	Basic Pitch Diameter E	Minor Dia. of External Threads[b] K_s	Minor Dia. of Internal Threads[b] K_n	Lead Angle at Basic Pitch Dia. λ		Section at Minor Diameter at $D-2h_b$	Tensile Stress Area[a]
	In.		In.	In.	In.	Deg.	Min.	Sq. in.	Sq. in.
1 (0.073)	0.0730	64	0.0629	0.0538	0.0561	4	31	0.00218	0.00263
2 (0.086)	0.0860	56	0.0744	0.0641	0.0667	4	22	0.00310	0.00370
3 (0.099)	0.0990	48	0.0855	0.0734	0.0764	4	26	0.00406	0.00487
4 (0.112)	0.1120	40	0.0958	0.0813	0.0849	4	45	0.00496	0.00604
5 (0.125)	0.1250	40	0.1088	0.0943	0.0979	4	11	0.00672	0.00796
6 (0.138)	0.1380	32	0.1177	0.0997	0.1042	4	50	0.00745	0.00909
8 (0.164)	0.1640	32	0.1437	0.1257	0.1302	3	58	0.01196	0.0140
10 (0.190)	0.1900	24	0.1629	0.1389	0.1449	4	39	0.01450	0.0175
12 (0.216)	0.2160	24	0.1889	0.1649	0.1709	4	1	0.0206	0.0242
1/4	0.2500	20	0.2175	0.1887	0.1959	4	11	0.0269	0.0318
5/16	0.3125	18	0.2764	0.2443	0.2524	3	40	0.0454	0.0524
3/8	0.3750	16	0.3344	0.2983	0.3073	3	24	0.0678	0.0775
7/16	0.4375	14	0.3911	0.3499	0.3602	3	20	0.0933	0.1063
1/2	0.5000	13	0.4500	0.4056	0.4167	3	7	0.1257	0.1419
9/16	0.5625	12	0.5084	0.4603	0.4723	2	59	0.162	0.182
5/8	0.6250	11	0.5660	0.5135	0.5266	2	56	0.202	0.226
3/4	0.7500	10	0.6850	0.6273	0.6417	2	40	0.302	0.334
7/8	0.8750	9	0.8028	0.7387	0.7547	2	31	0.419	0.462
1	1.0000	8	0.9188	0.8466	0.8647	2	29	0.551	0.606
1-1/8	1.1250	7	1.0322	0.9497	0.9704	2	31	0.693	0.763
1-1/4	1.2500	7	1.1572	1.0747	1.0954	2	15	0.890	0.969
1-3/8	1.3750	6	1.2667	1.1705	1.1946	2	24	1.054	1.155
1-1/2	1.5000	6	1.3917	1.2955	1.3196	2	11	1.294	1.405
1-3/4	1.7500	5	1.6201	1.5046	1.5335	2	15	1.74	1.90
2	2.0000	4½	1.8557	1.7274	1.7594	2	11	2.30	2.50
2-1/4	2.2500	4½	2.1057	1.9774	2.0094	1	55	3.02	3.25
2-1/2	2.5000	4	2.3376	2.1933	2.2294	1	57	3.72	4.00
2-3/4	2.7500	4	2.5876	2.4433	2.4794	1	46	4.62	4.93
3	3.0000	4	2.8376	2.6933	2.7294	1	36	5.62	5.97
3-1/4	3.2500	4	3.0876	2.9433	2.9794	1	29	6.72	7.10
3-1/2	3.5000	4	3.3376	3.1933	3.2294	1	22	7.92	8.33
3-3/4	3.7500	4	3.5876	3.4433	3.4794	1	16	9.21	9.66
4	4.0000	4	3.8376	3.6933	3.7294	1	11	10.61	11.08

a See formula under definition of tensile stress area in Appendix A, Terminology.
b Design form. (See Figure 1)

UNIFIED AND AMERICAN SCREW THREADS-APPENDIX C

TABLE 6 - BASIC DIMENSIONS FOR FINE THREAD SERIES (UNF AND NF)

Nominal Size	Basic Major Diameter D	Threads Per Inch n	Basic Pitch Diameter E	Minor Dia. of External Threads[b] K_s	Minor Dia. of Internal Threads[b] K_n	Lead Angle at Basic Pitch Dia. λ		Section at Minor Diameter at $D-2h_b$	Tensile Stress Area[a]
	In.		In.	In.	In.	Deg.	Min.	Sq. in.	Sq. in.
0 (0.060)	0.0600	80	0.0519	0.0447	0.0465	4	23	0.00151	0.00180
1 (0.073)	0.0730	72	0.0640	0.0560	0.0580	3	57	0.00237	0.00278
2 (0.086)	0.0860	64	0.0759	0.0668	0.0691	3	45	0.00339	0.00394
3 (0.099)	0.0990	56	0.0874	0.0771	0.0797	3	43	0.00451	0.00523
4 (0.112)	0.1120	48	0.0985	0.0864	0.0894	3	51	0.00566	0.00661
5 (0.125)	0.1250	44	0.1102	0.0971	0.1004	3	45	0.00716	0.00830
6 (0.138)	0.1380	40	0.1218	0.1073	0.1109	3	44	0.00874	0.01015
8 (0.164)	0.1640	36	0.1460	0.1299	0.1339	3	28	0.01285	0.01474
10 (0.190)	0.1900	32	0.1697	0.1517	0.1562	3	21	0.0175	0.0200
12 (0.216)	0.2160	28	0.1928	0.1722	0.1773	3	22	0.0226	0.0258
1/4	0.2500	28	0.2268	0.2062	0.2113	2	52	0.0326	0.0364
5/16	0.3125	24	0.2854	0.2614	0.2674	2	40	0.0524	0.0580
3/8	0.3750	24	0.3479	0.3239	0.3299	2	11	0.0809	0.0878
7/16	0.4375	20	0.4050	0.3762	0.3834	2	15	0.1090	0.1187
1/2	0.5000	20	0.4675	0.4387	0.4459	1	57	0.1486	0.1599
9/16	0.5625	18	0.5264	0.4943	0.5024	1	55	0.189	0.203
5/8	0.6250	18	0.5889	0.5568	0.5649	1	43	0.240	0.256
3/4	0.7500	16	0.7094	0.6733	0.6823	1	36	0.351	0.373
7/8	0.8750	14	0.8286	0.7874	0.7977	1	34	0.480	0.509
1[c]	1.0000	14	0.9536	0.0124	0.9227	1	22	0.646	0.680
1	1.0000	12	0.9459	0.8978	0.9098	1	36	0.625	0.663
1-1/8	1.1250	12	1.0709	1.0228	1.0348	1	25	0.812	0.856
1-1/4	1.2500	12	1.1959	1.1478	1.1598	1	16	1.024	1.073
1-3/8	1.3750	12	1.3209	1.2728	1.2848	1	9	1.260	1.315
1-1/2	1.5000	12	1.4459	1.3978	1.4098	1	3	1.521	1.581

a See formula under definition of tensile stress area in Appendix A, Terminology.
b Design form. (See Figure 1)
c NS

UNIFIED AND AMERICAN SCREW THREADS-APPENDIX C

TABLE 7 - BASIC DIMENSIONS FOR EXTRA FINE THREAD SERIES (UNEF AND NEF)

Nominal Size	Basic Major Diameter D	Threads Per Inch n	Basic Pitch Diameter E	Minor Dia. of External Threads[b] K_s	Minor Dia. of Internal Threads[b] K_n	Lead Angle at Basic Pitch Dia. λ		Section at Minor Diameter at $D-2h_b$	Tensile Stress Area[a]
	In.		In.	In.	In.	Deg.	Min.	Sq. in.	Sq. in.
12 (0.216)	0.2160	32	0.1957	0.1777	0.1822	2	55	0.0242	0.0270
1/4	0.2500	32	0.2297	0.2117	0.2162	2	29	0.0344	0.0379
5/16	0.3125	32	0.2922	0.2742	0.2787	1	57	0.0581	0.0625
3/8	0.3750	32	0.3547	0.3367	0.3412	1	36	0.0878	0.0932
7/16	0.4375	28	0.4143	0.3937	0.3988	1	34	0.1201	0.1274
1/2	0.5000	28	0.4768	0.4562	0.4613	1	22	0.162	0.170
9/16	0.5625	24	0.5354	0.5114	0.5174	1	25	0.203	0.214
5/8	0.6250	24	0.5979	0.5739	0.5799	1	16	0.256	0.268
11/16	0.6875	24	0.6604	0.6364	0.6424	1	9	0.315	0.329
3/4	0.7500	20	0.7175	0.6887	0.6959	1	16	0.369	0.386
13/16	0.8125	20	0.7800	0.7512	0.7584	1	10	0.439	0.458
7/8	0.8750	20	0.8425	0.8137	0.8209	1	5	0.515	0.536
15/16	0.9375	20	0.9050	0.8762	0.8834	1	0	0.598	0.620
1	1.0000	20	0.9675	0.9387	0.9459	0	57	0.687	0.711
1-1/16	1.0625	18	1.0264	0.9943	1.0024	0	59	0.770	0.799
1-1/8	1.1250	18	1.0889	1.0568	1.0649	0	56	0.871	0.901
1-3/16	1.1875	18	1.1514	1.1193	1.1274	0	53	0.977	1.009
1-1/4	1.2500	18	1.2139	1.1818	1.1899	0	50	1.090	1.123
1-5/16	1.3125	18	1.2764	1.2443	1.2524	0	48	1.208	1.244
1-3/8	1.3750	18	1.3389	1.3068	1.3149	0	45	1.333	1.370
1-7/16	1.4375	18	1.4014	1.3693	1.3774	0	43	1.464	1.503
1-1/2	1.5000	18	1.4639	1.4318	1.4399	0	42	1.60	1.64
1-9/16	1.5625	18	1.5264	1.4943	1.5024	0	40	1.74	1.79
1-5/8	1.6250	18	1.5889	1.5568	1.5649	0	38	1.89	1.94
1-11/16	1.6875	18	1.6514	1.6193	1.6274	0	37	2.05	2.10
1-3/4	1.7500	16	1.7094	1.6733	1.6823	0	40	2.19	2.24
2	2.0000	16	1.9594	1.9233	1.9323	0	35	2.89	2.95

a See formula under definition of tensile stress area in Appendix A, Terminology.
b Design form. (See Figure 1)

UNIFIED AND AMERICAN SCREW THREADS-APPENDIX C

TABLE 8 - BASIC DIMENSIONS FOR 8 THREAD SERIES (8UN AND 8N)[c]

Nominal Size	Basic Major Diameter D	Basic Pitch Diameter E	Minor Dia. of External Threads[b] K_s	Minor Dia. of Internal Threads[b] K_n	Lead Angle at Basic Pitch Dia. λ		Section at Minor Diameter at $D-2h_b$	Tensile Stress Area[a]
	In.	In.	In.	In.	Deg.	Min.	Sq. in.	Sq. in.
1	1.0000	0.9188	0.8466	0.8647	2	29	0.551	0.606
1-1/8	1.1250	1.0438	0.9716	0.9897	2	11	0.728	0.790
1-1/4	1.2500	1.1688	1.0966	1.1147	1	57	0.929	1.000
1-3/8	1.3750	1.2938	1.2216	1.2397	1	46	1.155	1.233
1-1/2	1.5000	1.4188	1.3466	1.3647	1	36	1.405	1.492
1-5/8	1.6250	1.5438	1.4716	1.4897	1	29	1.68	1.78
1-3/4	1.7500	1.6688	1.5966	1.6147	1	22	1.98	2.08
1-7/8	1.8750	1.7938	1.7216	1.7397	1	16	2.30	2.41
2	2.0000	1.9188	1.8466	1.8647	1	11	2.65	2.77
2-1/8	2.1250	2.0438	1.9716	1.9897	1	7	3.03	3.15
2-1/4	2.2500	2.1688	2.0966	2.1147	1	3	3.42	3.56
2-1/2	2.5000	2.4188	2.3466	2.3647	0	57	4.29	4.44
2-3/4	2.7500	2.6688	2.5966	2.6147	0	51	5.26	5.43
3	3.0000	2.9188	2.8466	2.8647	0	47	6.32	6.51
3-1/4	3.2500	3.1688	3.0966	3.1147	0	43	7.49	7.69
3-1/2	3.5000	3.4188	3.3466	3.3647	0	40	8.75	8.96
3-3/4	3.7500	3.6688	3.5966	3.6147	0	37	10.11	10.34
4	4.0000	3.9188	3.8466	3.8647	0	35	11.57	11.81
4-1/4	4.2500	4.1688	4.0966	4.1147	0	33	13.12	13.38
4-1/2	4.5000	4.4188	4.3466	4.3647	0	31	14.78	15.06
4-3/4	4.7500	4.6688	4.5966	4.6147	0	29	16.53	16.82
5	5.0000	4.9188	4.8466	4.8647	0	28	18.38	18.69
5-1/4	5.2500	5.1688	5.0966	5.1147	0	26	20.33	20.66
5-1/2	5.5000	5.4188	5.3466	5.3647	0	25	22.38	22.72
5-3/4	5.7500	5.6688	5.5966	5.6147	0	24	24.52	24.88
6	6.0000	5.9188	5.8466	5.8647	0	23	26.76	27.14

a See formula under definition of tensile stress area in Appendix A, Terminology.
b Design form. (See Figure 1)
c See Section 4, Screw Thread Selection, for lengths of engagement on which the 8 N specified limits are based. For special applications, where tolerances based on a length of engagement of 9 threads are more suitable than those of the standard 8-thread series (8 N), the 8 UNS limits for all sizes larger than 1-1/4 inch are shown in Table 3. The 1-1/8 and 1-1/4 inch sizes are in Table 2 and designated N, as the one diameter and 9 thread engagements are substantially equal.

UNIFIED AND AMERICAN SCREW THREADS-APPENDIX C

TABLE 9 - BASIC DIMENSIONS FOR 12 THREAD SERIES (12UN AND 12N)

Nominal Size	Basic Major Diameter D	Basic Pitch Diameter E	Minor Dia. of External Threads[b] K_s	Minor Dia. of Internal Threads[b] K_n	Lead Angle at Basic Pitch Dia. λ		Section at Minor Diameter at $D-2h_b$	Tensile Stress Area[a]
	In.	In.	In.	In.	Deg.	Min.	Sq. in.	Sq. in.
1/2	0.5000	0.4459	0.3978	0.4098	3	24	0.121	0.138
9/16	0.5625	0.5084	0.4603	0.4723	2	59	0.162	0.182
5/8	0.6250	0.5709	0.5228	0.5348	2	40	0.210	0.232
11/16	0.6875	0.6334	0.5853	0.5973	2	24	0.264	0.289
3/4	0.7500	0.6959	0.6478	0.6598	2	11	0.323	0.351
13/16	0.8125	0.7584	0.7103	0.7223	2	0	0.390	0.420
7/8	0.8750	0.8209	0.7728	0.7848	1	51	0.462	0.495
15/16	0.9375	0.8834	0.8353	0.8473	1	43	0.540	0.576
1	1.0000	0.9459	0.8978	0.9098	1	36	0.625	0.663
1-1/16	1.0625	1.0084	0.9603	0.9723	1	30	0.715	0.756
1-1/8	1.1250	1.0709	1.0228	1.0348	1	25	0.812	0.856
1-3/16	1.1875	1.1334	1.0853	1.0973	1	20	0.915	0.961
1-1/4	1.2500	1.1959	1.1478	1.1598	1	16	1.024	1.073
1-5/16	1.3125	1.2584	1.2103	1.2223	1	12	1.139	1.191
1-3/8	1.3750	1.3209	1.2728	1.2848	1	9	1.260	1.315
1-7/16	1.4375	1.3834	1.3353	1.3473	1	6	1.388	1.445
1-1/2	1.5000	1.4459	1.3978	1.4098	1	3	1.52	1.58
1-5/8	1.6250	1.5709	1.5228	1.5348	0	58	1.81	1.87
1-3/4	1.7500	1.6959	1.6478	1.6598	0	54	2.12	2.19
1-7/8	1.8750	1.8209	1.7728	1.7848	0	50	2.45	2.53
2	2.0000	1.9459	1.8978	1.9098	0	47	2.81	2.89
2-1/8	2.1250	2.0709	2.0228	2.0348	0	44	3.19	3.28
2-1/4	2.2500	2.1959	2.1478	2.1598	0	42	3.60	3.69
2-3/8	2.3750	2.3209	2.2728	2.2848	0	39	4.04	4.13
2-1/2	2.5000	2.4459	2.3978	2.4098	0	37	4.49	4.60
2-5/8	2.6250	2.5709	2.5228	2.5348	0	35	4.97	5.08
2-3/4	2.7500	2.6959	2.6478	2.6598	0	34	5.48	5.59
2-7/8	2.8750	2.8209	2.7728	2.7848	0	32	6.01	6.13
3	3.0000	2.9459	2.8978	2.9098	0	31	6.57	6.69
3-1/8	3.1250	3.0709	3.0228	3.0348	0	30	7.15	7.28
3-1/4	3.2500	3.1959	3.1478	3.1598	0	29	7.75	7.89
3-3/8	3.3750	3.3209	3.2728	3.2848	0	27	8.38	8.52
3-1/2	3.5000	3.4459	3.3978	3.4098	0	26	9.03	9.18
3-5/8	3.6250	3.5709	3.5228	3.5348	0	26	9.71	9.86
3-3/4	3.7500	3.6959	3.6478	3.6598	0	25	10.42	10.57
3-7/8	3.8750	3.8209	3.7728	3.7848	0	24	11.14	11.30
4	4.0000	3.9459	3.8978	3.9098	0	23	11.90	12.06
4-1/4	4.2500	4.1959	4.1478	4.1598	0	22	13.47	13.65
4-1/2	4.5000	4.4459	4.3978	4.4098	0	21	15.1	15.3
4-3/4	4.7500	4.6959	4.6478	4.6598	0	19	16.9	17.1
5	5.0000	4.9459	4.8978	4.9098	0	18	18.8	19.0
5-1/4	5.2500	5.1959	5.1478	5.1598	0	18	20.8	21.0
5-1/2	5.5000	5.4459	5.3978	5.4098	0	17	22.8	23.1
5-3/4	5.7500	5.6959	5.6478	5.6598	0	16	25.0	25.2
6	6.0000	5.9459	5.8978	5.9098	0	15	27.3	27.5

a See formula under definition of tensile stress area in Appendix A, Terminology.
b Design form. (See Figure 1)

UNIFIED AND AMERICAN SCREW THREADS-APPENDIX C

TABLE 10-BASIC DIMENSIONS FOR 16 THREAD SERIES (16UN AND 16N)

Nominal Size	Basic Major Diameter D	Basic Pitch Diameter E	Minor Dia. of External Threads[b] K_s	Minor Dia. of Internal Threads[b] K_n	Lead Angle at Basic Pitch Dia. λ		Section at Minor Diameter at $D-2h_b$	Tensile Stress Area[a]
	In.	In.	In.	In.	Deg.	Min.	Sq. in.	Sq. in.
3/4	0.7500	0.7094	0.6733	0.6823	1	36	0.351	0.373
13/16	0.8125	0.7719	0.7358	0.7448	1	29	0.420	0.444
7/8	0.8750	0.8344	0.7983	0.8073	1	22	0.495	0.521
15/16	0.9375	0.8969	0.8608	0.8698	1	16	0.576	0.604
1	1.0000	0.9594	0.9233	0.9323	1	11	0.663	0.693
1-1/16	1.0625	1.0219	0.9858	0.9948	1	7	0.756	0.788
1-1/8	1.1250	1.0844	1.0483	1.0573	1	3	0.856	0.889
1-3/16	1.1875	1.1469	1.1108	1.1198	1	0	0.961	0.997
1-1/4	1.2500	1.2094	1.1733	1.1823	0	57	1.073	1.111
1-5/16	1.3125	1.2719	1.2358	1.2448	0	54	1.191	1.230
1-3/8	1.3750	1.3344	1.2983	1.3073	0	51	1.315	1.356
1-7/16	1.4375	1.3969	1.3608	1.3698	0	49	1.445	1.488
1-1/2	1.5000	1.4594	1.4233	1.4323	0	47	1.58	1.63
1-9/16	1.5625	1.5219	1.4858	1.4948	0	45	1.72	1.77
1-5/8	1.6250	1.5844	1.5483	1.5573	0	43	1.87	1.92
1-11/16	1.6875	1.6469	1.6108	1.6198	0	42	2.03	2.08
1-3/4	1.7500	1.7094	1.6733	1.6823	0	40	2.19	2.24
1-13/16	1.8125	1.7719	1.7358	1.7448	0	39	2.35	2.41
1-7/8	1.8750	1.8344	1.7983	1.8073	0	37	2.53	2.58
1-15/16	1.9375	1.8969	1.8608	1.8698	0	36	2.71	2.77
2	2.0000	1.9594	1.9233	1.9323	0	35	2.89	2.95
2-1/16	2.0625	2.0219	1.9858	1.9948	0	34	3.08	3.15
2-1/8	2.1250	2.0844	2.0483	2.0573	0	33	3.28	3.35
2-3/16	2.1875	2.1469	2.1108	2.1198	0	32	3.48	3.55
2-1/4	2.2500	2.2094	2.1733	2.1823	0	31	3.69	3.76
2-5/16	2.3125	2.2719	2.2358	2.2448	0	30	3.91	3.98
2-3/8	2.3750	2.3344	2.2983	2.3073	0	29	4.13	4.21
2-7/16	2.4375	2.3969	2.3608	2.3698	0	29	4.36	4.44
2-1/2	2.5000	2.4594	2.4233	2.4323	0	28	4.60	4.67
2-5/8	2.6250	2.5844	2.5483	2.5573	0	26	5.08	5.16
2-3/4	2.7500	2.7094	2.6733	2.6823	0	25	5.59	5.68
2-7/8	2.8750	2.8344	2.7983	2.8073	0	24	6.13	6.22
3	3.0000	2.9594	2.9233	2.9323	0	23	6.69	6.78
3-1/8	3.1250	3.0844	3.0483	3.0573	0	22	7.28	7.37
3-1/4	3.2500	3.2094	3.1733	3.1823	0	21	7.89	7.99
3-3/8	3.3750	3.3344	3.2983	3.3073	0	21	8.52	8.63
3-1/2	3.5000	3.4594	3.4233	3.4323	0	20	9.18	9.29
3-5/8	3.6250	3.5844	3.5483	3.5573	0	19	9.86	9.98
3-3/4	3.7500	3.7094	3.6733	3.6823	0	18	10.57	10.69
3-7/8	3.8750	3.8344	3.7983	3.8073	0	18	11.30	11.43
4	4.0000	3.9594	3.9233	3.9323	0	17	12.06	12.19
4-1/4	4.2500	4.2094	4.1733	4.1823	0	16	13.65	13.78
4-1/2	4.5000	4.4594	4.4233	4.4323	0	15	15.34	15.5
4-3/4	4.7500	4.7094	4.6733	4.6823	0	15	17.1	17.3
5	5.0000	4.9594	4.9233	4.9323	0	14	19.0	19.2
5-1/4	5.2500	5.2094	5.1733	5.1823	0	13	21.0	21.1
5-1/2	5.5000	5.4594	5.4233	5.4323	0	13	23.1	23.2
5-3/4	5.7500	5.7094	5.6733	5.6823	0	12	25.2	25.4
6	6.0000	5.9594	5.9233	5.9323	0	11	27.5	27.7

a See formula under definition of tensile stress area in Appendix A, Terminology.
b Design form. (See Figure 1)

UNIFIED AND AMERICAN SCREW THREADS-APPENDIX D

FORMULAS AND TABLES FOR LIMITING DIMENSIONS OF STANDARD SERIES THREADS

UNC, NC, UNF, NF, UNEF, NEF, 8N, 12UN, 12N, 16UN AND 16N SERIES

CLASSES 1A, 2A, 3A, 1B, 2B, 3B, 2 AND 3

EXTERNAL THREAD

Where: D = basic major (nominal) diameter
h_s = thread height (see Table 4)
h_{as} = screw addendum height (see Table 4)
$h_b = 2h_{as}$ (see Table 4)
E = basic pitch diameter $(D - h_b)$ (see Tables 5 to 10)
K_s = minor diameter $(D - 2h_s)$ (see Tables 5 to 10)
p = pitch (in inches)

MAXIMUM MAJOR DIAMETER:

Classes 1A and 2A = Basic major diameter (D), minus allowance (see Tables 13 to 18)
Classes 3A, 2, and 3 = Basic major diameter (D)

MINIMUM MAJOR DIAMETER:

Class 1A = Maximum, minus $0.090\sqrt[3]{p^2}$ (see Tables 13 to 18)
Classes 2A* and 3A = Maximum, minus $0.060\sqrt[3]{p^2}$ (see Tables 13 to 18)
Classes 2 and 3 = Maximum, minus two times Class 2 pitch diameter tolerance NC and NF series (see Tables 13 to 18)

MAXIMUM PITCH DIAMETER:

Classes 1A and 2A = Basic pitch diameter (E), minus allowance (see Tables 13 to 18)
Classes 3A, 2, and 3 = Basic pitch diameter (E)

MINIMUM PITCH DIAMETER:

= Maximum, minus tolerance for class of thread specified (see Tables 13 to 18)

MAXIMUM MINOR DIAMETER:

Classes 1A and 2A
To intersection of rounded root with its centerline (Design form, see Figure 1)
= Minor diameter (K_s) (see Tables 5 to 10), minus allowance (Tables 13 to 18)
To intersection of rounded root with flanks of threads (Gaging diameter, see Figure 1)
= Minor diameter (K_s) (see Tables 5 to 10), minus allowance, plus H/6 (see Table 4)
Classes 3A, 2 and 3
To intersection of rounded root with its centerline (Design form, see Figure 1)
= Minor diameter (K_s) (see Tables 5 to 10)
To intersection of rounded root with flanks of threads (Gaging diameter, see Figure 1)
= Minor diameter (K_s) plus H/6 (see Table 4)

MINIMUM MINOR DIAMETER:

In dimensioning external threads, the minimum minor diameter is not specified, being established by the crest of an unworn tool. In practice, the minor diameter of an external thread is satisfactory when accepted by a gage or gaging method that represents the maximum material condition of the internal thread.

INTERNAL THREAD

Where: D = basic major (nominal) diameter
h_n = thread height (see Table 4)
E = basic pitch diameter $(D - h_b)$ (see Table 4)
K_n = minor diameter $(D - 2h_n)$ (see Table 4)
p = pitch (in inches)

MAXIMUM MAJOR DIAMETER:

In dimensioning internal threads the maximum major diameter is not specified, being established by the crest of an unworn tool. In practice, the major diameter of an internal thread is satisfactory when accepted by a gage or gaging method that represents the maximum material condition of an external thread which has no allowance.

MINIMUM MAJOR DIAMETER:

= Basic major diameter (D) (see Tables 5 to 10)

MINIMUM PITCH DIAMETER:

= Basic pitch diameter (E) (see Tables 5 to 10)

MAXIMUM PITCH DIAMETER:

= Minimum, plus tolerance for class of thread specified (see Tables 13 to 18)

MINIMUM MINOR DIAMETER:

= Minor diameter (K_n) (see Tables 5 to 10), then rounded off, for sizes No. 6 and larger in Classes 1B and 2B, to the nearest 0.001 in. three-place decimal; and in Class 3B to the nearest 0.0010 in. four-place decimal.

MAXIMUM MINOR DIAMETER:

= Minor diameter (K_n) (see Tables 5 to 10), plus minor diameter tolerance from Tables 13 to 18, then rounded off for sizes No. 6 and larger in Classes 1B and 2B to the nearest 0.001 in.

* Exceptions are the coarse thread series and 8 thread series Class 2A, unfinished hot-rolled material, which take the Class 1A formula.

UNIFIED AND AMERICAN SCREW THREADS-APPENDIX D

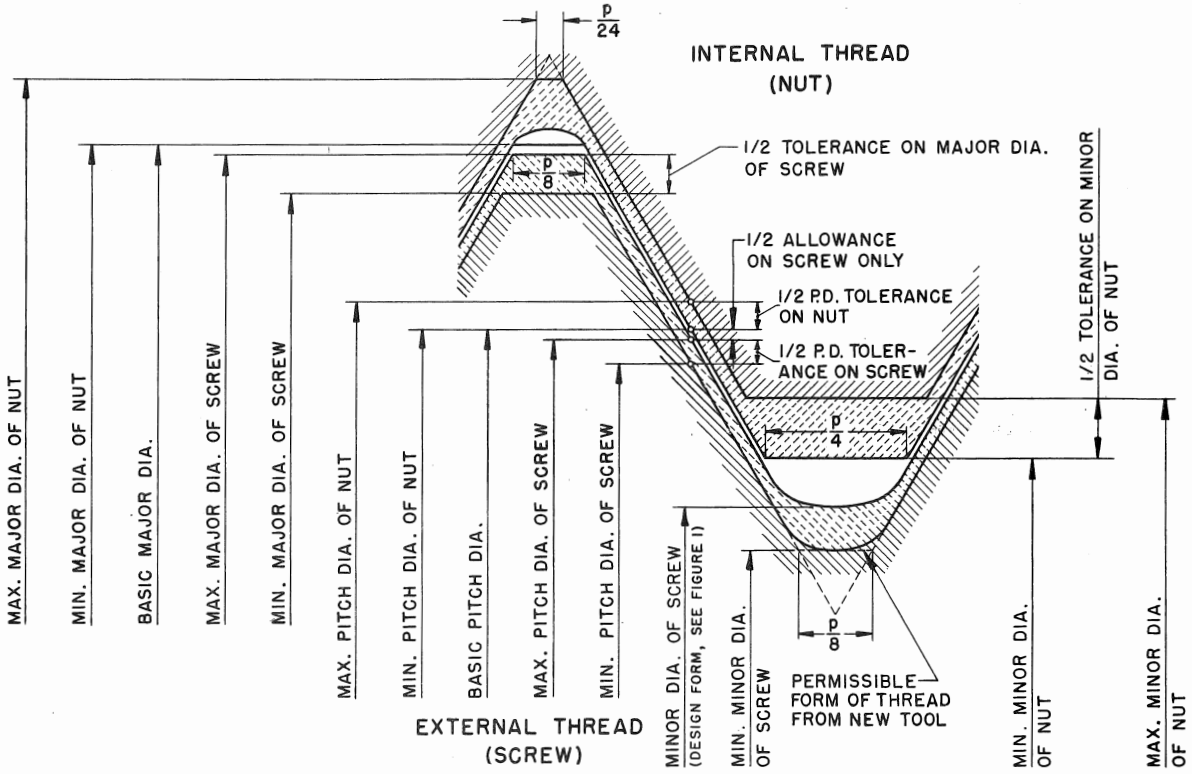

FIGURE 3 DISPOSITION OF TOLERANCES, ALLOWANCE AND CREST CLEARANCES FOR UNIFIED AND AMERICAN CLASSES 1A, 2A, 1B AND 2B

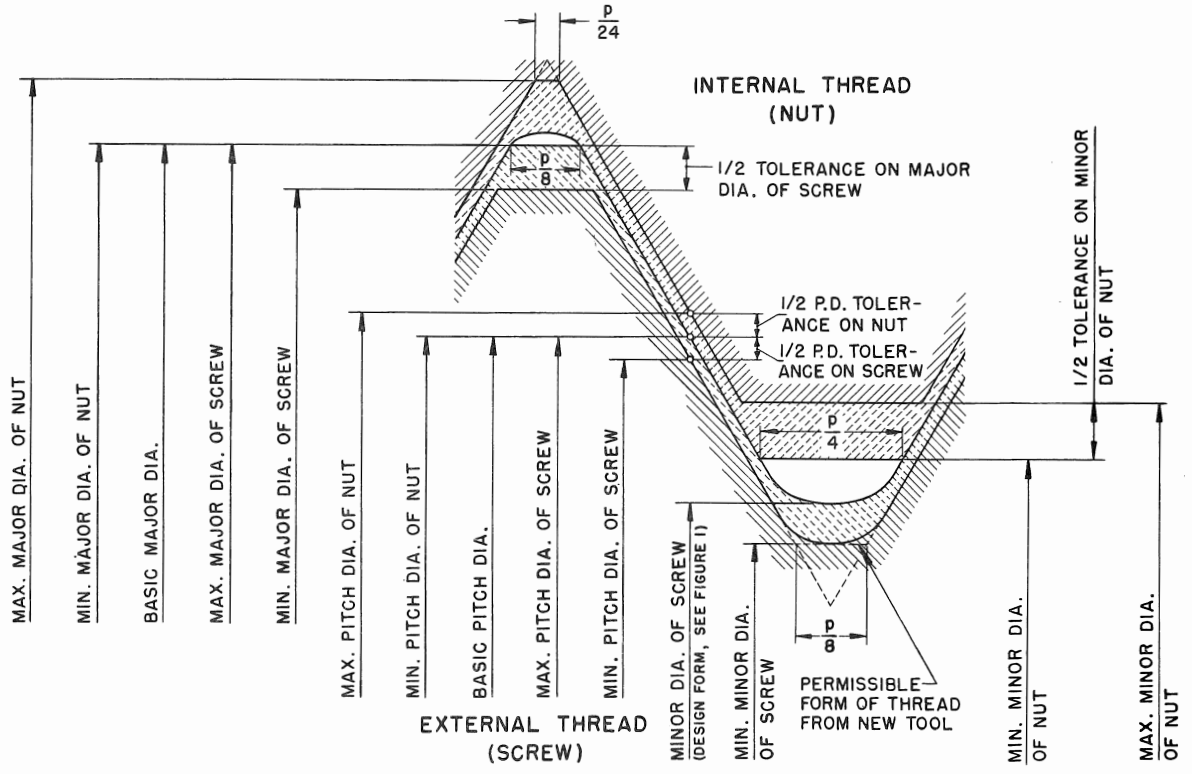

FIGURE 4 DISPOSITION OF TOLERANCES AND CREST CLEARANCES FOR UNIFIED AND AMERICAN CLASSES 3A, 3B, 2 AND 3

UNIFIED AND AMERICAN SCREW THREADS-APPENDIX E

FORMULAS AND TABLES FOR ALLOWANCES AND TOLERANCES OF STANDARD SERIES THREADS

UNC, NC, UNF, NF, UNEF, NEF, 8N, 12UN, 12N, 16UN AND 16N SERIES

CLASSES 1A, 2A, 3A, 1B, 2B, 3B, 2 AND 3

EXTERNAL THREAD

Where: D = basic major (nominal) diameter
h_s = thread height (see Table 4)
L_e = Length of engagement (in inches)
p = pitch (in inches)

ALLOWANCE:

Classes 1A and 2A = 30% of Class 2A pitch diameter tolerance (see Tables 13 to 18)
Classes 3A, 2, and 3 = No allowance

MAJOR DIAMETER TOLERANCE: (see Tables 13 to 18)

Class 1A = $0.090\sqrt[3]{p^2}$
Classes 2A, semifinished and finished, and 3A = $0.060\sqrt[3]{p^2}$
Class 2A UNC unfinished hot-rolled material = $0.090\sqrt[3]{p^2}$
Class 2 NC unfinished hot-rolled material = No formula (see Table 2, footnote d)
Classes 2 and 3, semifinished and finished = Two times Class 2 pitch diameter tolerance, NC and NF series for threads per inch specified (see Tables 13 to 18)

PITCH DIAMETER TOLERANCE:

UNC, UNF, NC and NF Series
Class 1A = 1.500 Class 2A pitch diameter tolerance
*Class 2A = $0.0015\sqrt[3]{D} + 0.0015\sqrt{L_e} + 0.015\sqrt[3]{p^2}$
Class 3A = 0.750 Class 2A pitch diameter tolerance
Classes 2 and 3 = No formulas (see Tables 13 and 14)

Values in Tables 13 and 14 for Class 2A are based on the above formula, with $L_e = D$. For Classes 2 and 3, they are based on the pitch of the thread only and are correct for a length of engagement equal to the nominal diameter but may be used for lengths of engagement up to 1-1/2 D. For lengths of engagement greater than 1-1/2 D, use values obtained from Tables 21 to 24, 27 and 28.

UNEF and NEF Series
*Class 2A = $0.0015\sqrt[3]{D} + 0.0015\sqrt{L_e} + 0.015\sqrt[3]{p^2}$
Class 3A = 0.750 Class 2A pitch diameter tolerance
*Class 2 = $0.002\sqrt{D} + 0.00133L_e + 0.010\sqrt{p}$
Class 3 = 70% of Class 2 pitch diameter tolerance

Values in Table 15 for Classes 2A, 2, and 3 are based on a length of engagement (L_e) equal to 9 threads. These values are suitable for lengths of engagement of from 5p to 15p. For greater lengths of engagement, use values obtained from Tables 22, 27 and 28.

8N Series
*Class 2A = $0.0015\sqrt[3]{D} + 0.0015\sqrt{L_e} + 0.015\sqrt[3]{p^2}$
Class 3A = 0.750 Class 2A pitch diameter tolerance
*Class 2 = $0.002\sqrt{D} + 0.002\,L_e + 0.010\sqrt{p}$
Class 3 = 70% of Class 2 pitch diameter tolerance

Values in Table 16 are based on a length of engagement (L_e) equal to the nominal diameter for Class 2A and for Classes 2 and 3 up to and including 3 in. diameter; for larger diameters of Classes 2 and 3 they are based on a length of engagement of 3 in.

These values, or those given in Table 3 which are based on 9 threads length of engagement, are suitable for shorter lengths of engagement. For greater lengths of engagement, use values obtained from Tables 22, 27 and 28.

12UN and 12N Series
*Class 2A = $0.0015\sqrt[3]{D} + 0.0015\sqrt{L_e} + 0.015\sqrt[3]{p^2}$
Class 3A = 0.750 Class 2A pitch diameter tolerance
Class 2
1-1/2 in. and smaller = 9/16 – 12NC pitch diameter tolerance
*over 1-1/2 in. = $0.002\sqrt{D} + 0.00133L_e + 0.010\sqrt{p}$
Class 3 = 70% of Class 2 pitch diameter tolerance

Values in standard thread series tables for Classes 2A, 2, and 3 are based on a length of engagement (L_e) equal to 9 threads except for Classes 2 and 3 for sizes from 1/2 to 1-1/2 in. inclusive; these values are constant and are the same as in the coarse and fine thread series. The values based on 9-threads engagement are suitable for lengths of engagement of from 5p to 15p. For greater lengths of engagement, use values obtained from Tables 22, 27 and 28.

16UN and 16N Series
*Class 2A = $0.0015\sqrt[3]{D} + 0.0015\sqrt{L_e} + 0.015\sqrt[3]{p^2}$
Class 3A = 0.750 Class 2A pitch diameter tolerance
Class 2
3/4 in. size = 3/4 – 16 UNF pitch diameter tolerance
* over 3/4 in. = $0.002\sqrt{D} + 0.00133L_e + 0.010\sqrt{p}$
Class 3 = 70% of Class 2 pitch diameter tolerance

Values in Table 18 for Classes 2A, 2, and 3 are based on a length of engagement (L_e) equal to the nominal diameter for the 3/4 in. size and a length of engagement of 9 threads for larger sizes. These values are suitable for lengths of engagement of from 5p to 15p. For greater lengths of engagement, use values obtained from Tables 22, 27 and 28.

MINOR DIAMETER TOLERANCE:

Classes 1A, 2A, 3A, 2, and 3
To intersection of rounded root with its centerline (Design form, see Figure 1)

* See Tables 11 and 12 (Appendix E) for values of these terms corresponding to given values of diameter, length of engagement, and pitch.

= Pitch diameter tolerance for class of thread specified, plus H/12 (1/2 of H/6) (see Table 4)

To intersection of rounded root with flanks of threads (Gaging diameter, see Figure 1)

= Pitch diameter tolerance for class of thread specified, plus H/4 (see Table 4)

The tolerance for minor diameter is for reference only. In dimensioning external threads the minimum minor diameter is not specified, being established by the crest of an unworn tool. In practice, the minor diameter of an external thread is satisfactory when accepted by a gage or gaging method that represents the maximum material condition of the internal thread less the amount of an allowance, if any.

INTERNAL THREAD

Where: D = basic major (nominal) diameter
h_n = thread height (see Table 4)
L_e = length of engagement (in inches)
p = pitch (in inches)

MAJOR DIAMETER TOLERANCE:

Classes 1B, 2B, 3B, 2, and 3 = H/6 (see Table 4) plus the pitch diameter tolerance for the thread class under consideration.

The tolerance for major diameter is for reference only. In dimensioning internal threads the maximum major diameter is not specified, being established by the crest of an unworn tool. In practice, the major diameter of an internal thread is satisfactory when accepted by a gage or gaging method that represents the maximum material condition of an external thread which has no allowance.

PITCH DIAMETER TOLERANCE:

UNC, UNF, NC, and NF Series
Class 1B = 1.950 Class 2A pitch diameter tolerance (1.500 Class 2B)
Class 2B = 1.300 Class 2A pitch diameter tolerance
Class 3B = 0.975 Class 2A pitch diameter tolerance (0.750 Class 2B)
Classes 2 and 3 = No formulas (see Tables 13 and 14)

Values in Tables 13 and 14 for Class 2A are based on the above formula with L_e = D. For Classes 2 and 3, they are based on the pitch of the thread only and are correct for a length of engagement equal to the nominal diameter but may be used for any lengths of engagement up to 1-1/2D. For greater lengths of engagement, use values obtained from Tables 24 to 28.

UNEF and NEF Series
Class 2B = 1.300 Class 2A pitch diameter tolerance
Class 3B = 0.975 Class 2A pitch diameter tolerance (0.750 Class 2B)
Class 2 = $0.002\sqrt{D} + 0.00133L_e + 0.010\sqrt{p}$
Class 3 = 70% Class 2 pitch diameter tolerance

Values in Table 15 for Classes 2B, 2, and 3 are based on a length of engagement (L_e) of 9 threads. These values are suitable for lengths of engagement of from 5p to 15p. For greater lengths of engagement, use values obtained from Tables 25, 27 and 28.

8N Series
Class 2B = 1.300 Class 2A pitch diameter tolerance
Class 3B = 0.975 Class 2A pitch diameter tolerance (0.750 Class 2B)
Class 2 = $0.002\sqrt{D} + 0.002L_e + 0.010\sqrt{p}$
Class 3 = 70% of Class 2 pitch diameter tolerance

Values in Table 16 are based on a length of engagement (L_e) equal to the nominal diameter for Class 2B and for Classes 2 and 3 up to and including 3 in. diameter; for larger diameters of Classes 2 and 3 they are based on a length of engagement of 3 in.

These values, based on 9p length of engagement, are suitable for shorter lengths of engagement. For greater lengths of engagement, use values obtained from Tables 25, 27 and 28.

12UN and 12N Series
Class 2B = 1.300 Class 2A pitch diameter tolerance
Class 3B = 0.975 Class 2A pitch diameter tolerance (0.750 Class 2B)
Class 2
1-1/2 in. and smaller = 9/16 − 12 NC pitch diameter tolerance
over 1-1/2 in. = $0.002\sqrt{D} + 0.00133L_e + 0.010\sqrt{p}$
Class 3 = 70% of Class 2 pitch diameter tolerance

Values in standard thread series tables for Classes 2A, 2, and 3 are based on a length of engagement (L_e) equal to 9 threads except for Classes 2 and 3 for sizes from 1/2 to 1-1/2 in. inclusive; these values are constant and are the same as in the coarse and fine thread series. The values based on 9 threads engagement are suitable for lengths of engagement of from 5p to 15p. For greater lengths of engagement, use values obtained from Tables 25, 27 and 28.

16UN and 16N Series
Class 2B = 1.300 Class 2A pitch diameter tolerance
Class 3B = 0.975 Class 2A pitch diameter tolerance (0.750 Class 2B)
Class 2
3/4 in. size = 3/4 − 16 UNF pitch diameter tolerance
over 3/4 in. = $0.002\sqrt{D} + 0.00133L_e + 0.010\sqrt{p}$
Class 3 = 70% of Class 2 pitch diameter tolerance

Values in Table 18 for Classes 2B, 2, and 3 are based on a length of engagement (L_e) equal to the nominal diameter for the 3/4 in. size and a length of engagement of 9 threads for larger sizes. These values are suitable for

lengths of engagement of from 5p to 15p. For greater lengths of engagement, use values obtained from Tables 25, 27 and 28.

MINOR DIAMETER TOLERANCE:

Classes 1B and 2B

All thread series and special thread sizes in less than 1/4 in.

$= [0.05\sqrt[3]{p^2} + 0.03p/D] - 0.002$, within the following limitations:

Tolerances shall not be greater than 0.394p.

(This corresponds to 53% of the basic thread height and applies in the range of the smallest number sizes of the NC and NF thread series.)

Tolerances shall not be less than $0.25p - 0.4p^2$.

(This corresponds to a thread height of 65% for 80 to 24 threads per inch.)

The formulas are suitable for general applications having lengths of engagement up to 1-1/2 diameters. For specific applications within this range or for longer lengths of engagement, see Appendix H and Table 32.

Classes 1B and 2B

All thread series and special threads 1/4 in. and larger, for 80 to 4 threads per inch, inclusive,* $= 0.25p - 0.4p^2$.

(This corresponds to a thread height of 64.5% for 80 threads per inch, graduating to 71.8% for 4 threads per inch.)

Class 3B

All thread series

$= [0.05\sqrt[3]{p^2} + 0.03p/D] - 0.002$, within the following limitations:

Tolerance shall not be greater than 0.394p.

(This corresponds to 53% of the basic thread height and applies in the range of the smallest numbered sizes of the UNC, UNF, NC and NF thread series.

Tolerances shall not be less than:

For 80 to 13 threads per inch, inclusive, $0.23p - 1.5p^2$

(This corresponds to a thread height of 67% for 80 threads per inch, graduating to 74% for 13 threads per inch.)

For 12 threads per inch and coarser, 0.120p.

(This corresponds to a thread height of 74% and is the tolerance for all sizes 12 threads and coarser and 1 in. and larger.)

The formulas are suitable for general applications having lengths of engagement up to 1-1/2 diameters. For specific applications within this range or for longer lengths of engagement, see Appendix H and Table 33.

Classes 2 and 3

NC number sizes $= [1.08253 - 1.299(\sqrt[3]{D - 2p} + 0.160)]p$ except No. 12 for which there is no formula (see Tables 13 and 14)

NC fractional sizes:

1/4 in. to 1 in. inclusive = No formulas (see Table 13)

over 1 in. $= (1.08253 - 0.97428)p$

NF number sizes $= [1.08253 - 1.299(\sqrt[3]{D - 2p} + 0.180)]p$ except No. 12 for which there is no formula (see Tables 13 and 14)

NF fractional sizes:

1/4 in. to 1 in. inclusive = No formulas (see Table 14)

over 1 in. $= (1.08253 - 0.97428)p$

NEF Series = No formulas (see Table 15)

8 N Series = 1 – 8 NC minor diameter tolerance (see Table 16)

12 N Series

1/2 in. and 9/16 in. sizes = 9/16 – 12 NC minor diameter tolerance (see Table 17)

over 9/16 in. $= (1.08253 - 0.97428)p$

16 N Series = 3/4 – 16 NF minor diameter tolerance (see Table 18)

In the preceding formulas:

1.299p = double depth of American National Thread
1.08253p = 83-1/3% of double depth
0.97428p = 75% of double depth
D = basic major (nominal) diameter
2p = 2 pitches or threads

(See Appendix H and Table 4)

* Formula not applicable to threads coarser than 4 threads per inch. For such threads use tolerance = 0.15p.

TABLE II - CLASS 2A, INCREMENTS IN PITCH DIAMETER TOLERANCE

DIAMETER						LENGTH OF ENGAGEMENT																				PITCH	
						Based on					Based on					Based on					Based on						
D	$0.0015\sqrt[3]{D}$	D	$0.0015\sqrt[3]{D}$	D	$0.0015\sqrt[3]{D}$	1 D for sizes	9p for tpi	20p for tpi	L_e	$0.0015\sqrt{L_e}$	1 D for sizes	9p for tpi	20p for tpi	L_e	$0.0015\sqrt{L_e}$	1 D for sizes	9p for tpi	20p for tpi	L_e	$0.0015\sqrt{L_e}$	1 D for sizes	9p for tpi	20p for tpi	L_e	$0.0015\sqrt{L_e}$	Threads per inch	$0.015\sqrt[3]{p^2}$
0.0600	0.000587	1.3125	0.001642	3.8750	0.002356	#0	—	—	0.0600	0.000367	—	28	—	0.3214	0.000850	1¼	—	16	1.2500	0.001677	4¼	—	—	4.2500	0.003092	80	0.000808
0.0625	0.000595	1.3750	0.001668	4.0000	0.002381	—	—	—	0.0625	0.000375	—	—	—	0.3281	0.000859	—	7	—	1.2857	0.001701	—	—	—	4.3750	0.003137	72	0.000867
0.0730	0.000627	1.4375	0.001693	4.2500	0.002430	#1	—	—	0.0730	0.000405	—	—	—	0.3438	0.000880	—	—	—	1.3125	0.001718	4½	—	—	4.5000	0.003182	64	0.000938
0.0860	0.000662	1.5000	0.001717	4.5000	0.002476	—	—	—	0.0781	0.000419	—	—	56	0.3571	0.000896	1⅜	—	—	1.3750	0.001759	—	—	—	4.6250	0.003226	56	0.001025
0.0938	0.000682	1.5625	0.001741	4.7500	0.002521	#2	—	—	0.0860	0.000440	—	—	—	0.3594	0.000899	—	—	14	1.4286	0.001793	4¾	—	—	4.7500	0.003269	48	0.001136
0.0990	0.000694	1.6250	0.001764	5.0000	0.002565	—	—	—	0.0938	0.000459	⅜	24	—	0.3750	0.000919	—	—	—	1.4375	0.001798	—	—	—	4.8750	0.003312	44	0.001204
0.1120	0.000723	1.6875	0.001786	5.2500	0.002607	#3	—	—	0.0990	0.000472	—	—	—	0.3906	0.000937	1½	6	—	1.5000	0.001837	5	—	4	5.0000	0.003354	40	0.001282
0.1250	0.000750	1.7500	0.001808	5.5000	0.002648	—	—	—	0.1094	0.000496	—	—	—	0.4063	0.000956	1⅝	—	—	1.6250	0.001912	—	—	—	5.1250	0.003396	36	0.001376
0.1380	0.000775	1.8125	0.001829	5.7500	0.002687	#4	—	—	0.1120	0.000502	—	—	48	0.4167	0.000968	—	—	12	1.6667	0.001936	5¼	—	—	5.2500	0.003437	32	0.001488
0.1640	0.000821	1.8750	0.001850	6.0000	0.002726	—	80	—	0.1125	0.000503	—	—	—	0.4219	0.000974	1¾	—	—	1.7500	0.001984	—	—	—	5.3750	0.003478	28	0.001627
0.1875	0.000859	1.9375	0.001870	7.0000	0.002869	#5	72	—	0.1250	0.000530	7/16	—	—	0.4375	0.000992	1⅞	—	—	1.8750	0.002054	5½	—	—	5.5000	0.003518	24	0.001803
0.1900	0.000862	2.0000	0.001890	8.0000	0.003000	#6	—	—	0.1380	0.000557	—	20	—	0.4500	0.001006	2	—	10	2.0000	0.002121	—	—	—	5.6250	0.003558	20	0.002036
0.2160	0.000900	2.0625	0.001909	9.0000	0.003120	—	64	—	0.1406	0.000562	½	18	40	0.5000	0.001061	2⅛	—	—	2.1250	0.002187	5¾	—	—	5.7500	0.003597	18	0.002184
0.2500	0.000945	2.1250	0.001928	10.0000	0.003232	—	—	—	0.1563	0.000593	—	—	36	0.5556	0.001118	2¼	4	—	2.2500	0.002250	—	—	—	5.8750	0.003636	16	0.002362
0.3125	0.001018	2.1875	0.001947	12.0000	0.003434	—	56	—	0.1607	0.000601	9/16	16	—	0.5625	0.001125	—	—	—	2.3750	0.002312	6	—	—	6.0000	0.003674	14	0.002582
0.3750	0.001082	2.2500	0.001966	14.0000	0.003615	#8	—	—	0.1640	0.000607	⅝	—	32	0.6250	0.001186	2½	—	8	2.5000	0.002372	—	—	—	6.5000	0.003824	13	0.002713
0.4375	0.001139	2.3125	0.001984	16.0000	0.003780	—	—	—	0.1719	0.000622	—	14	—	0.6429	0.001203	—	—	—	2.6250	0.002430	—	—	—	7.0000	0.003969	12	0.002862
0.5000	0.001191	2.3750	0.002001	18.0000	0.003931	—	48	—	0.1875	0.000650	—	—	—	0.6875	0.001244	2¾	—	—	2.7500	0.002487	—	—	—	7.5000	0.004108	11	0.003033
0.5625	0.001238	2.4375	0.002019	20.0000	0.004072	#10	—	—	0.1900	0.000654	—	—	28	0.7143	0.001268	—	—	—	2.8750	0.002543	—	—	—	8.0000	0.004243	10	0.003232
0.6250	0.001282	2.5000	0.002036	24.0000	0.004327	—	—	—	0.2031	0.000676	¾	12	—	0.7500	0.001299	3	—	—	3.0000	0.002598	—	—	—	8.5000	0.004373	9	0.003467
0.6875	0.001324	2.6250	0.002069	—	—	#12	—	—	0.2160	0.000697	—	—	—	0.8125	0.001352	—	—	—	3.1250	0.002652	—	—	—	9.0000	0.004500	8	0.003750
0.7500	0.001363	2.7500	0.002102	—	—	—	—	—	0.2188	0.000702	—	—	24	0.8333	0.001369	3¼	—	—	3.2500	0.002704	—	—	—	9.5000	0.004623	7	0.004099
0.8125	0.001400	2.8750	0.002133	—	—	—	40	—	0.2250	0.000712	⅞	—	—	0.8750	0.001403	—	—	6	3.3333	0.002739	—	—	—	10.0000	0.004743	6	0.004543
0.8750	0.001435	3.0000	0.002163	—	—	—	—	—	0.2344	0.000726	—	10	—	0.9000	0.001423	—	—	—	3.3750	0.002756	—	—	—	10.5000	0.004861	5	0.005130
0.9375	0.001468	3.1250	0.002193	—	—	¼	36	80	0.2500	0.000750	—	—	—	0.9375	0.001452	3½	—	—	3.5000	0.002806	—	—	—	11.0000	0.004975	4½	0.005503
1.0000	0.001500	3.2500	0.002222	—	—	—	—	—	0.2656	0.000773	1	—	20	1.0000	0.001500	—	—	—	3.6250	0.002856	—	—	—	11.5000	0.005087	4	0.005953
1.0625	0.001531	3.3750	0.002250	—	—	—	—	72	0.2778	0.000791	—	—	—	1.0625	0.001546	3¾	—	—	3.7500	0.002905	—	—	—	12.0000	0.005196	—	—
1.1250	0.001560	3.5000	0.002277	—	—	—	32	—	0.2813	0.000796	—	—	18	1.1111	0.001581	—	—	—	3.8750	0.002953	—	—	—	—	—	—	—
1.1875	0.001588	3.6250	0.002304	—	—	—	—	—	0.2969	0.000817	1⅛	8	—	1.1250	0.001591	4	—	—	4.0000	0.003000	—	—	—	—	—	—	—
1.2500	0.001616	3.7500	0.002330	—	—	5/16	—	64	0.3125	0.000839	—	—	—	1.1875	0.001635	—	—	—	4.1250	0.003047	—	—	—	—	—	—	—

TABLE 12 - CLASS 2, INCREMENTS IN PITCH DIAMETER TOLERANCE

DIAMETER						LENGTH OF ENGAGEMENT								PITCH	
D	$0.002\sqrt{D}$	D	$0.002\sqrt{D}$	D	$0.002\sqrt{D}$	L_e	$0.00133L_e$	L_e	$0.00133L_e$	L_e	$0.00133L_e$	L_e	$0.00133L_e$	Threads Per Inch	$0.010\sqrt{p}$
0.0600	0.000490	1.1875	0.002179	3.1250	0.003536	0.0600	0.000080	0.3281	0.000436	1.7500	0.002328	5.0000	0.006650	80	0.001118
0.0625	0.000500	1.2500	0.002236	3.2500	0.003606	0.0625	0.000083	0.3438	0.000457	1.8750	0.002494	5.1250	0.006816	72	0.001179
0.0730	0.000540	1.3125	0.002291	3.3750	0.003674	0.0730	0.000097	0.3594	0.000478	2.0000	0.002660	5.2500	0.006982	64	0.001250
0.0860	0.000587	1.3750	0.002345	3.5000	0.003742	0.0781	0.000104	0.3750	0.000499	2.1250	0.002826	5.3750	0.007149	56	0.001336
0.0990	0.000629	1.4375	0.002398	3.6250	0.003808	0.0860	0.000114	0.3906	0.000519	2.2500	0.002992	5.5000	0.007315	48	0.001443
0.1120	0.000669	1.5000	0.002449	3.7500	0.003873	0.0938	0.000125	0.4063	0.000540	2.3750	0.003159	5.6250	0.007481	44	0.001508
0.1250	0.000707	1.5625	0.002500	3.8750	0.003937	0.0990	0.000132	0.4219	0.000561	2.5000	0.003325	5.7500	0.007648	40	0.001581
0.1380	0.000743	1.6250	0.002550	4.0000	0.004000	0.1094	0.000146	0.4375	0.000582	2.6250	0.003491	5.8750	0.007814	36	0.001667
0.1640	0.000810	1.6875	0.002598	4.2500	0.004123	0.1120	0.000149	0.5000	0.000665	2.7500	0.003658	6.0000	0.007980	32	0.001768
0.1900	0.000872	1.7500	0.002646	4.5000	0.004243	0.1250	0.000166	0.5625	0.000748	2.8750	0.003824	6.5000	0.008645	28	0.001890
0.2160	0.000930	1.8125	0.002693	4.7500	0.004359	0.1380	0.000184	0.6250	0.000831	3.0000	0.003990	7.0000	0.009310	24	0.002041
0.2500	0.001000	1.8750	0.002739	5.0000	0.004472	0.1406	0.000187	0.6875	0.000914	3.1250	0.004156	7.5000	0.009975	20	0.002236
0.3125	0.001118	1.9375	0.002784	5.2500	0.004583	0.1563	0.000208	0.7500	0.000998	3.2500	0.004322	8.0000	0.010640	18	0.002357
0.3750	0.001225	2.0000	0.002828	5.5000	0.004690	0.1640	0.000218	0.8125	0.001081	3.3750	0.004489	8.5000	0.011305	16	0.002500
0.4375	0.001323	2.0625	0.002872	5.7500	0.004796	0.1719	0.000229	0.8750	0.001164	3.5000	0.004655	9.0000	0.011970	14	0.002673
0.5000	0.001414	2.1250	0.002915	6.0000	0.004899	0.1875	0.000249	0.9375	0.001247	3.6250	0.004821	9.5000	0.012635	13	0.002774
0.5625	0.001500	2.1875	0.002958	7.0000	0.005292	0.1900	0.000253	1.0000	0.001330	3.7500	0.004988	10.0000	0.013300	12	0.002887
0.6250	0.001581	2.2500	0.003000	8.0000	0.005657	0.2031	0.000270	1.0625	0.001413	3.8750	0.005154	10.5000	0.013965	11	0.003015
0.6875	0.001658	2.3125	0.003041	9.0000	0.006000	0.2160	0.000287	1.1250	0.001496	4.0000	0.005320	11.0000	0.014630	10	0.003162
0.7500	0.001732	2.3750	0.003082	10.0000	0.006325	0.2188	0.000291	1.1875	0.001579	4.1250	0.005486	11.5000	0.015295	9	0.003333
0.8125	0.001803	2.4375	0.003122	12.0000	0.006928	0.2344	0.000312	1.2500	0.001662	4.2500	0.005652	12.0000	0.015960	8	0.003536
0.8750	0.001871	2.5000	0.003162	14.0000	0.007483	0.2500	0.000332	1.3125	0.001746	4.3750	0.005819	—	—	7	0.003780
0.9375	0.001936	2.6250	0.003240	16.0000	0.008000	0.2656	0.000353	1.3750	0.001829	4.5000	0.005985	—	—	6	0.004082
1.0000	0.002000	2.7500	0.003317	18.0000	0.008485	0.2813	0.000374	1.4375	0.001912	4.6250	0.006151	—	—	5	0.004472
1.0625	0.002062	2.8750	0.003391	20.0000	0.008944	0.2969	0.000395	1.5000	0.001995	4.7500	0.006318	—	—	4½	0.004714
1.1250	0.002121	3.0000	0.003464	24.0000	0.009798	0.3125	0.000416	1.6250	0.002161	4.8750	0.006484	—	—	4	0.005000

UNIFIED AND AMERICAN SCREW THREADS-APPENDIX E

TABLE 13 - ALLOWANCES AND TOLERANCES FOR COARSE THREAD SERIES (UNC AND NC)

Nominal Size	Thds. Per Inch n	Allowances	Tolerances													
			Major Diameter, External Threads[a]			Pitch Diameter								Minor Dia., Internal Threads		
		Cl. 1A and 2A Only	Class 1A	Cl. 2A and 3A	Cl. 2 and 3	Class 1A	Class 1B	Class 2A	Class 2B	Class 3A	Class 3B	Class 2	Class 3	Cl. 1B and 2B	Class 3B	Cl. 2 and 3
1 (.073)	64	0.0006	—	0.0038	0.0038	—	—	0.0020	0.0026	0.0015	0.0019	0.0019	0.0014	0.0062	0.0062	0.0062
2 (.086)	56	0.0006	—	0.0041	0.0040	—	—	0.0021	0.0028	0.0016	0.0021	0.0020	0.0015	0.0070	0.0070	0.0070
3 (.099)	48	0.0007	—	0.0045	0.0044	—	—	0.0023	0.0030	0.0017	0.0022	0.0022	0.0016	0.0081	0.0081	0.0077
4 (.112)	40	0.0008	—	0.0051	0.0048	—	—	0.0025	0.0033	0.0019	0.0024	0.0024	0.0017	0.0090	0.0090	0.0089
5 (.125)	40	0.0008	—	0.0051	0.0048	—	—	0.0026	0.0033	0.0019	0.0025	0.0024	0.0017	0.0083	0.0083	0.0083
6 (.138)	32	0.0008	—	0.0060	0.0054	—	—	0.0028	0.0037	0.0021	0.0027	0.0027	0.0019	0.0098	0.0098	0.0103
8 (.164)	32	0.0009	—	0.0060	0.0054	—	—	0.0029	0.0033	0.0022	0.0028	0.0027	0.0019	0.0087	0.0087	0.0082
10 (.190)	24	0.0010	—	0.0072	0.0066	—	—	0.0033	0.0043	0.0025	0.0032	0.0033	0.0024	0.0106	0.0106	0.0110
12 (.216)	24	0.0010	—	0.0072	0.0066	—	—	0.0034	0.0044	0.0026	0.0033	0.0033	0.0024	0.0098	0.0098	0.0092
1/4	20	0.0011	0.0122	0.0081	0.0072	0.0056	0.0073	0.0037	0.0048	0.0028	0.0036	0.0036	0.0026	0.0115	0.0108	0.0101
5/16	18	0.0012	0.0131	0.0087	0.0082	0.0061	0.0079	0.0040	0.0053	0.0030	0.0039	0.0041	0.0030	0.0127	0.0106	0.0106
3/8	16	0.0013	0.0142	0.0094	0.0090	0.0065	0.0085	0.0044	0.0057	0.0033	0.0043	0.0045	0.0032	0.0141	0.0109	0.0111
7/16	14	0.0014	0.0155	0.0103	0.0098	0.0071	0.0092	0.0047	0.0061	0.0035	0.0046	0.0049	0.0036	0.0158	0.0115	0.0119
1/2	13	0.0015	0.0163	0.0109	0.0104	0.0074	0.0097	0.0050	0.0065	0.0037	0.0048	0.0052	0.0037	0.0169	0.0117	0.0123
9/16	12	0.0016	0.0172	0.0114	0.0112	0.0078	0.0102	0.0052	0.0068	0.0039	0.0051	0.0056	0.0040	0.0180	0.0120	0.0127
5/8	11	0.0016	0.0182	0.0121	0.0118	0.0083	0.0107	0.0055	0.0072	0.0041	0.0054	0.0059	0.0042	0.0194	0.0125	0.0131
3/4	10	0.0018	0.0194	0.0129	0.0128	0.0088	0.0115	0.0059	0.0077	0.0044	0.0057	0.0064	0.0045	0.0210	0.0128	0.0136
7/8	9	0.0019	0.0208	0.0139	0.0140	0.0095	0.0123	0.0063	0.0082	0.0047	0.0061	0.0070	0.0049	0.0228	0.0134	0.0142
1	8	0.0020	0.0225	0.0150	0.0152	0.0101	0.0132	0.0068	0.0088	0.0051	0.0066	0.0076	0.0054	0.0250	0.0150	0.0148
1-1/8	7	0.0022	0.0246	0.0164	0.0170	0.0109	0.0141	0.0072	0.0094	0.0054	0.0071	0.0085	0.0059	0.0276	0.0171	0.0154
1-1/4	7	0.0022	0.0246	0.0164	0.0170	0.0111	0.0144	0.0074	0.0096	0.0055	0.0072	0.0085	0.0059	0.0276	0.0171	0.0154
1-3/8	6	0.0024	0.0273	0.0182	0.0202	0.0120	0.0156	0.0080	0.0104	0.0060	0.0078	0.0101	0.0071	0.0306	0.0200	0.0180
1-1/2	6	0.0024	0.0273	0.0182	0.0202	0.0121	0.0158	0.0081	0.0105	0.0061	0.0079	0.0101	0.0071	0.0306	0.0200	0.0180
1-3/4	5	0.0027	0.0308	0.0205	0.0232	0.0134	0.0174	0.0089	0.0116	0.0067	0.0087	0.0116	0.0082	0.0340	0.0240	0.0216
2	4½	0.0029	0.0330	0.0220	0.0254	0.0143	0.0186	0.0095	0.0124	0.0071	0.0093	0.0127	0.0089	0.0358	0.0267	0.0241
2-1/4	4½	0.0029	0.0330	0.0220	0.0254	0.0146	0.0190	0.0097	0.0126	0.0073	0.0095	0.0127	0.0089	0.0358	0.0267	0.0241
2-1/2	4	0.0031	0.0357	0.0238	0.0280	0.0155	0.0202	0.0104	0.0135	0.0078	0.0101	0.0140	0.0097	0.0375	0.0300	0.0270
2-3/4	4	0.0032	0.0357	0.0238	0.0280	0.0158	0.0206	0.0105	0.0137	0.0079	0.0103	0.0140	0.0097	0.0375	0.0300	0.0270
3	4	0.0032	0.0357	0.0238	0.0280	0.0161	0.0209	0.0107	0.0139	0.0080	0.0104	0.0140	0.0097	0.0375	0.0300	0.0270
3-1/4	4	0.0033	0.0357	0.0238	0.0280	0.0163	0.0212	0.0109	0.0141	0.0082	0.0106	0.0140	0.0097	0.0375	0.0300	0.0270
3-1/2	4	0.0033	0.0357	0.0238	0.0280	0.0166	0.0215	0.0110	0.0143	0.0083	0.0108	0.0140	0.0097	0.0375	0.0300	0.0270
3-3/4	4	0.0034	0.0357	0.0238	0.0280	0.0168	0.0218	0.0112	0.0145	0.0084	0.0109	0.0140	0.0097	0.0375	0.0300	0.0270
4	4	0.0034	0.0357	0.0238	0.0280	0.0170	0.0221	0.0113	0.0147	0.0085	0.0111	0.0140	0.0097	0.0375	0.0300	0.0270

a For major diameter tolerances for Classes 2A and 2 unfinished hot rolled material, see Table 2.

UNIFIED AND AMERICAN SCREW THREADS-APPENDIX E

TABLE 14 - ALLOWANCES AND TOLERANCES FOR FINE THREAD SERIES (UNF AND NF)

Nominal Size	Thds Per Inch n	Allowances	Tolerances													
			Major Diameter, External Threads			Pitch Diameter								Minor Dia., Internal Threads		
		Cl. 1A and 2A Only	Class 1A	Cl. 2A and 3A	Cl. 2 and 3	Class 1A	Class 1B	Class 2A	Class 2B	Class 3A	Class 3B	Class 2	Class 3	Cl. 1B and 2B	Class 3B	Cl. 2 and 3
0 (.060)	80	0.0005	—	0.0032	0.0034	—	—	0.0018	0.0023	0.0013	0.0017	0.0017	0.0013	0.0049	0.0049	0.0049
1 (.073)	72	0.0006	—	0.0035	0.0036	—	—	0.0019	0.0025	0.0014	0.0019	0.0018	0.0013	0.0055	0.0055	0.0054
2 (.086)	64	0.0006	—	0.0038	0.0038	—	—	0.0020	0.0027	0.0015	0.0020	0.0019	0.0014	0.0062	0.0062	0.0055
3 (.099)	56	0.0007	—	0.0041	0.0040	—	—	0.0022	0.0028	0.0016	0.0021	0.0020	0.0015	0.0068	0.0068	0.0059
4 (.112)	48	0.0007	—	0.0045	0.0044	—	—	0.0024	0.0031	0.0018	0.0023	0.0022	0.0016	0.0074	0.0074	0.0066
5 (.125)	44	0.0007	—	0.0048	0.0046	—	—	0.0025	0.0032	0.0019	0.0024	0.0023	0.0016	0.0075	0.0075	0.0064
6 (.138)	40	0.0008	—	0.0051	0.0048	—	—	0.0026	0.0034	0.0020	0.0025	0.0024	0.0017	0.0077	0.0077	0.0070
8 (.164)	36	0.0008	—	0.0055	0.0050	—	—	0.0028	0.0036	0.0021	0.0027	0.0025	0.0018	0.0077	0.0077	0.0063
10 (.190)	32	0.0009	—	0.0060	0.0054	—	—	0.0030	0.0039	0.0023	0.0029	0.0027	0.0019	0.0079	0.0079	0.0062
12 (.216)	28	0.0010	—	0.0065	0.0062	—	—	0.0032	0.0042	0.0024	0.0031	0.0031	0.0022	0.0084	0.0084	0.0062
1/4	28	0.0010	0.0098	0.0065	0.0062	0.0050	0.0065	0.0033	0.0043	0.0025	0.0032	0.0031	0.0022	0.0084	0.0077	0.0060
5/16	24	0.0011	0.0108	0.0072	0.0066	0.0055	0.0071	0.0037	0.0048	0.0027	0.0036	0.0033	0.0024	0.0097	0.0080	0.0065
3/8	24	0.0011	0.0108	0.0072	0.0066	0.0057	0.0074	0.0038	0.0049	0.0029	0.0037	0.0033	0.0024	0.0097	0.0073	0.0065
7/16	20	0.0013	0.0122	0.0081	0.0072	0.0062	0.0081	0.0042	0.0054	0.0031	0.0041	0.0036	0.0026	0.0115	0.0082	0.0072
1/2	20	0.0013	0.0122	0.0081	0.0072	0.0064	0.0084	0.0043	0.0056	0.0032	0.0042	0.0036	0.0026	0.0115	0.0078	0.0072
9/16	18	0.0014	0.0131	0.0087	0.0082	0.0068	0.0089	0.0045	0.0059	0.0034	0.0044	0.0041	0.0030	0.0127	0.0082	0.0076
5/8	18	0.0014	0.0131	0.0087	0.0082	0.0070	0.0091	0.0047	0.0060	0.0035	0.0045	0.0041	0.0030	0.0127	0.0081	0.0076
3/4	16	0.0015	0.0142	0.0094	0.0090	0.0075	0.0098	0.0050	0.0065	0.0038	0.0049	0.0045	0.0032	0.0141	0.0085	0.0080
7/8	14	0.0016	0.0155	0.0103	0.0098	0.0081	0.0106	0.0054	0.0070	0.0041	0.0053	0.0049	0.0036	0.0158	0.0091	0.0085
1[a]	14	—	—	—	0.0098	—	—	—	—	—	—	0.0049	0.0036	—	—	0.0085
1	12	0.0018	0.0172	0.0114	—	0.0088	0.0114	0.0059	0.0076	0.0044	0.0057	—	—	0.0180	0.0100	—
1-1/8	12	0.0018	0.0172	0.0114	0.0112	0.0090	0.0117	0.0060	0.0078	0.0045	0.0059	0.0056	0.0040	0.0180	0.0100	0.0090
1-1/4	12	0.0018	0.0172	0.0114	0.0112	0.0092	0.0120	0.0062	0.0080	0.0046	0.0060	0.0056	0.0040	0.0180	0.0100	0.0090
1-3/8	12	0.0019	0.0172	0.0114	0.0112	0.0094	0.0123	0.0063	0.0082	0.0047	0.0061	0.0056	0.0040	0.0180	0.0100	0.0090
1-1/2	12	0.0019	0.0172	0.0114	0.0112	0.0096	0.0125	0.0064	0.0083	0.0048	0.0063	0.0056	0.0040	0.0180	0.0100	0.0090

a NS

UNIFIED AND AMERICAN SCREW THREADS-APPENDIX E

TABLE 15-ALLOWANCES AND TOLERANCES FOR EXTRA FINE THREAD SERIES (UNEF AND NEF)

Nominal Size	Thds Per Inch	Allow-ances	Tolerances										
			Major Diameter, External Threads		Pitch Diameter						Minor Dia., Internal Threads		
	n	Class 2A Only	Cl. 2A and 3A	Cl. 2 and 3	Class 2A	Class 2B	Class 3A	Class 3B	Class 2	Class 3	Class 2B	Class 3B	Cl. 2 and 3
12 (.216)	32	0.0009	0.0060	0.0054	0.0031	0.0041	0.0024	0.0031	0.0031	0.0022	0.0074	0.0073	0.0053
1/4	32	0.0010	0.0060	0.0054	0.0032	0.0042	0.0024	0.0031	0.0032	0.0022	0.0074	0.0067	0.0048
5/16	32	0.0010	0.0060	0.0054	0.0032	0.0042	0.0024	0.0031	0.0033	0.0023	0.0074	0.0060	0.0048
3/8	32	0.0010	0.0060	0.0054	0.0034	0.0044	0.0025	0.0033	0.0034	0.0024	0.0074	0.0057	0.0048
7/16	28	0.0011	0.0065	0.0062	0.0036	0.0046	0.0027	0.0035	0.0036	0.0025	0.0084	0.0063	0.0056
1/2	28	0.0011	0.0065	0.0062	0.0037	0.0048	0.0028	0.0036	0.0037	0.0026	0.0084	0.0063	0.0056
9/16	24	0.0012	0.0072	0.0066	0.0039	0.0051	0.0029	0.0038	0.0040	0.0028	0.0097	0.0070	0.0064
5/8	24	0.0012	0.0072	0.0066	0.0040	0.0052	0.0030	0.0039	0.0041	0.0029	0.0097	0.0070	0.0064
11/16	24	0.0012	0.0072	0.0066	0.0040	0.0052	0.0030	0.0039	0.0041	0.0029	0.0097	0.0070	0.0064
3/4	20	0.0013	0.0081	0.0072	0.0044	0.0057	0.0033	0.0043	0.0046	0.0032	0.0115	0.0078	0.0072
13/16	20	0.0013	0.0081	0.0072	0.0044	0.0057	0.0033	0.0043	0.0046	0.0032	0.0115	0.0078	0.0072
7/8	20	0.0013	0.0081	0.0072	0.0044	0.0057	0.0033	0.0043	0.0047	0.0033	0.0115	0.0078	0.0072
15/16	20	0.0014	0.0081	0.0072	0.0045	0.0059	0.0034	0.0044	0.0047	0.0033	0.0115	0.0078	0.0072
1	20	0.0014	0.0081	0.0072	0.0045	0.0059	0.0034	0.0044	0.0048	0.0034	0.0115	0.0078	0.0072
1-1/16	18	0.0014	0.0087	0.0082	0.0047	0.0062	0.0036	0.0046	0.0051	0.0036	0.0127	0.0081	0.0076
1-1/8	18	0.0014	0.0087	0.0082	0.0047	0.0062	0.0036	0.0046	0.0052	0.0036	0.0127	0.0081	0.0076
1-3/16	18	0.0015	0.0087	0.0082	0.0049	0.0063	0.0036	0.0047	0.0052	0.0036	0.0127	0.0081	0.0076
1-1/4	18	0.0015	0.0087	0.0082	0.0049	0.0063	0.0036	0.0047	0.0053	0.0037	0.0127	0.0081	0.0076
1-5/16	18	0.0015	0.0087	0.0082	0.0049	0.0063	0.0036	0.0047	0.0053	0.0037	0.0127	0.0081	0.0076
1-3/8	18	0.0015	0.0087	0.0082	0.0049	0.0063	0.0036	0.0047	0.0054	0.0038	0.0127	0.0081	0.0076
1-7/16	18	0.0015	0.0087	0.0082	0.0050	0.0065	0.0037	0.0048	0.0054	0.0038	0.0127	0.0081	0.0076
1-1/2	18	0.0015	0.0087	0.0082	0.0050	0.0065	0.0037	0.0048	0.0055	0.0038	0.0127	0.0081	0.0076
1-9/16	18	0.0015	0.0087	0.0082	0.0050	0.0065	0.0037	0.0048	0.0055	0.0039	0.0127	0.0081	0.0076
1-5/8	18	0.0015	0.0087	0.0082	0.0050	0.0065	0.0037	0.0048	0.0056	0.0039	0.0127	0.0081	0.0076
1-11/16	18	0.0015	0.0087	0.0082	0.0051	0.0066	0.0038	0.0049	0.0056	0.0039	0.0127	0.0081	0.0076
1-3/4	16	0.0016	0.0094	0.0090	0.0053	0.0069	0.0040	0.0052	0.0059	0.0041	0.0141	0.0085	0.0080
2	16	0.0016	0.0094	0.0090	0.0054	0.0070	0.0040	0.0052	0.0061	0.0043	0.0141	0.0085	0.0080

UNIFIED AND AMERICAN SCREW THREADS-APPENDIX E

TABLE 16-ALLOWANCES AND TOLERANCES FOR 8 THREAD SERIES (8N AND 8UNS)

Nominal Size	Allowances		Tolerances												
	Class 2A Only		Major Diameter, External Threads[a]		Pitch Diameter								Minor Diameter, Internal Threads		
	8N	8UNS	Cl. 2A and 3A	Cl. 2 and 3	8N Class 2A	8N Class 2B	8N Class 3A	8N Class 3B	8UNS Class 2A	8UNS Class 2B	Class 2	Class 3	Class 2B	Class 3B	Cl. 2 and 3
1	0.0020	0.0021	0.0150	0.0152	0.0068	0.0088	0.0051	0.0066	0.0068	0.0089	0.0076	0.0054	0.0250	0.0150	0.0148
1-1/8	0.0021	0.0021	0.0150	0.0152	0.0069	0.0090	0.0052	0.0067	0.0069	0.0090	0.0079	0.0055	0.0250	0.0150	0.0148
1-1/4	0.0021	0.0021	0.0150	0.0152	0.0070	0.0092	0.0053	0.0069	0.0070	0.0092	0.0083	0.0058	0.0250	0.0150	0.0148
1-3/8	0.0022	0.0021	0.0150	0.0152	0.0072	0.0093	0.0054	0.0070	0.0070	0.0090	0.0086	0.0061	0.0250	0.0150	0.0148
1-1/2	0.0022	0.0021	0.0150	0.0152	0.0073	0.0095	0.0055	0.0071	0.0071	0.0092	0.0090	0.0063	0.0250	0.0150	0.0148
1-5/8	0.0022	0.0021	0.0150	0.0152	0.0074	0.0097	0.0056	0.0072	0.0071	0.0092	0.0093	0.0065	0.0250	0.0150	0.0148
1-3/4	0.0023	0.0021	0.0150	0.0152	0.0075	0.0098	0.0057	0.0074	0.0071	0.0093	0.0097	0.0068	0.0250	0.0150	0.0148
1-7/8	0.0023	0.0021	0.0150	0.0152	0.0077	0.0100	0.0057	0.0075	0.0071	0.0093	0.0100	0.0070	0.0250	0.0150	0.0148
2	0.0023	0.0022	0.0150	0.0152	0.0078	0.0101	0.0058	0.0076	0.0072	0.0094	0.0104	0.0073	0.0250	0.0150	0.0148
2-1/8	0.0024	0.0022	0.0150	0.0152	0.0079	0.0102	0.0059	0.0077	0.0072	0.0094	0.0107	0.0075	0.0250	0.0150	0.0148
2-1/4	0.0024	0.0022	0.0150	0.0152	0.0080	0.0104	0.0060	0.0078	0.0072	0.0094	0.0110	0.0077	0.0250	0.0150	0.0148
2-1/2	0.0024	0.0022	0.0150	0.0152	0.0082	0.0106	0.0061	0.0080	0.0074	0.0096	0.0117	0.0082	0.0250	0.0150	0.0148
2-3/4	0.0025	0.0022	0.0150	0.0152	0.0083	0.0108	0.0063	0.0081	0.0074	0.0096	0.0124	0.0087	0.0250	0.0150	0.0148
3	0.0026	0.0023	0.0150	0.0152	0.0085	0.0111	0.0064	0.0083	0.0075	0.0098	0.0130	0.0092	0.0250	0.0150	0.0148
3-1/4	0.0026	0.0023	0.0150	0.0152	0.0087	0.0113	0.0065	0.0085	0.0075	0.0098	0.0132	0.0093	0.0250	0.0150	0.0148
3-1/2	0.0026	0.0023	0.0150	0.0152	0.0088	0.0115	0.0066	0.0086	0.0076	0.0099	0.0133	0.0093	0.0250	0.0150	0.0148
3-3/4	0.0027	0.0023	0.0150	0.0152	0.0090	0.0117	0.0067	0.0088	0.0076	0.0099	0.0134	0.0094	0.0250	0.0150	0.0148
4	0.0027	0.0023	0.0150	0.0152	0.0091	0.0119	0.0068	0.0089	0.0077	0.0100	0.0135	0.0095	0.0250	0.0150	0.0148
4-1/4	0.0028	0.0023	0.0150	0.0152	0.0093	0.0121	0.0070	0.0090	0.0077	0.0100	0.0137	0.0096	0.0250	0.0150	0.0148
4-1/2	0.0028	0.0023	0.0150	0.0152	0.0094	0.0122	0.0071	0.0092	0.0077	0.0100	0.0138	0.0097	0.0250	0.0150	0.0148
4-3/4	0.0029	0.0024	0.0150	0.0152	0.0095	0.0124	0.0072	0.0093	0.0079	0.0103	0.0139	0.0098	0.0250	0.0150	0.0148
5	0.0029	0.0024	0.0150	0.0152	0.0097	0.0126	0.0073	0.0094	0.0079	0.0103	0.0140	0.0099	0.0250	0.0150	0.0148
5-1/4	0.0029	0.0024	0.0150	0.0152	0.0098	0.0127	0.0073	0.0095	0.0079	0.0103	0.0141	0.0099	0.0250	0.0150	0.0148
5-1/2	0.0030	0.0024	0.0150	0.0152	0.0099	0.0129	0.0074	0.0097	0.0079	0.0103	0.0142	0.0100	0.0250	0.0150	0.0148
5-3/4	0.0030	0.0024	0.0150	0.0152	0.0100	0.0130	0.0075	0.0098	0.0081	0.0105	0.0143	0.0101	0.0250	0.0150	0.0148
6	0.0030	0.0024	0.0150	0.0152	0.0102	0.0132	0.0076	0.0099	0.0081	0.0105	0.0144	0.0102	0.0250	0.0150	0.0148

a For major diameter tolerances for Classes 2A and 2 unfinished hot rolled material, see Table 2.

UNIFIED AND AMERICAN SCREW THREADS-APPENDIX E

TABLE 17-ALLOWANCES AND TOLERANCES FOR 12 THREAD SERIES (12UN AND 12N)

Nominal Size	Allow-ances	Tolerances										
		Major Diameter, External Threads		Pitch Diameter						Minor Diameter, Internal Threads		
	Class 2A Only	Cl. 2A and 3A	Cl. 2 and 3	Class 2A	Class 2B	Class 3A	Class 3B	Class 2	Class 3	Class 2B	Class 3B	Cl. 2 and 3
1/2	0.0016	0.0114	0.0112	0.0054	0.0070	0.0040	0.0052	0.0056	0.0040	0.0180	0.0100	0.0127
9/16	0.0016	0.0114	0.0112	0.0052	0.0068	0.0039	0.0051	0.0056	0.0040	0.0180	0.0100	0.0127
5/8	0.0016	0.0114	0.0112	0.0054	0.0071	0.0041	0.0053	0.0056	0.0040	0.0180	0.0100	0.0090
11/16	0.0016	0.0114	0.0112	0.0054	0.0071	0.0041	0.0053	0.0056	0.0040	0.0180	0.0100	0.0090
3/4	0.0017	0.0114	0.0112	0.0055	0.0072	0.0041	0.0054	0.0056	0.0040	0.0180	0.0100	0.0090
13/16	0.0017	0.0114	0.0112	0.0055	0.0072	0.0041	0.0054	0.0056	0.0040	0.0180	0.0100	0.0090
7/8	0.0017	0.0114	0.0112	0.0055	0.0072	0.0041	0.0054	0.0056	0.0040	0.0180	0.0100	0.0090
15/16	0.0017	0.0114	0.0112	0.0057	0.0074	0.0041	0.0055	0.0056	0.0040	0.0180	0.0100	0.0090
1	0.0018	0.0114	0.0112	0.0059	0.0076	0.0044	0.0057	0.0056	0.0040	0.0180	0.0100	0.0090
1-1/16	0.0017	0.0114	0.0112	0.0057	0.0074	0.0042	0.0055	0.0056	0.0040	0.0180	0.0100	0.0090
1-1/8	0.0018	0.0114	0.0112	0.0060	0.0078	0.0045	0.0059	0.0056	0.0040	0.0180	0.0100	0.0090
1-3/16	0.0017	0.0114	0.0112	0.0058	0.0075	0.0043	0.0056	0.0056	0.0040	0.0180	0.0100	0.0090
1-1/4	0.0018	0.0114	0.0112	0.0062	0.0080	0.0046	0.0060	0.0056	0.0040	0.0180	0.0100	0.0090
1-5/16	0.0017	0.0114	0.0112	0.0058	0.0075	0.0043	0.0056	0.0056	0.0040	0.0180	0.0100	0.0090
1-3/8	0.0019	0.0114	0.0112	0.0063	0.0082	0.0047	0.0061	0.0056	0.0040	0.0180	0.0100	0.0090
1-7/16	0.0018	0.0114	0.0112	0.0059	0.0076	0.0044	0.0057	0.0056	0.0040	0.0180	0.0100	0.0090
1-1/2	0.0019	0.0114	0.0112	0.0064	0.0083	0.0048	0.0063	0.0056	0.0040	0.0180	0.0100	0.0090
1-5/8	0.0018	0.0114	0.0112	0.0059	0.0076	0.0044	0.0057	0.0064	0.0045	0.0180	0.0100	0.0090
1-3/4	0.0018	0.0114	0.0112	0.0060	0.0078	0.0045	0.0058	0.0065	0.0046	0.0180	0.0100	0.0090
1-7/8	0.0018	0.0114	0.0112	0.0060	0.0078	0.0045	0.0058	0.0066	0.0046	0.0180	0.0100	0.0090
2	0.0018	0.0114	0.0112	0.0061	0.0079	0.0045	0.0059	0.0067	0.0047	0.0180	0.0100	0.0090
2-1/8	0.0018	0.0114	0.0112	0.0061	0.0079	0.0045	0.0059	0.0068	0.0048	0.0180	0.0100	0.0090
2-1/4	0.0018	0.0114	0.0112	0.0061	0.0079	0.0045	0.0059	0.0069	0.0048	0.0180	0.0100	0.0090
2-3/8	0.0019	0.0114	0.0112	0.0062	0.0081	0.0046	0.0060	0.0070	0.0049	0.0180	0.0100	0.0090
2-1/2	0.0019	0.0114	0.0112	0.0062	0.0081	0.0046	0.0060	0.0071	0.0049	0.0180	0.0100	0.0090
2-5/8	0.0019	0.0114	0.0112	0.0062	0.0081	0.0046	0.0060	0.0071	0.0050	0.0180	0.0100	0.0090
2-3/4	0.0019	0.0114	0.0112	0.0062	0.0081	0.0046	0.0060	0.0072	0.0050	0.0180	0.0100	0.0090
2-7/8	0.0019	0.0114	0.0112	0.0063	0.0082	0.0047	0.0062	0.0073	0.0051	0.0180	0.0100	0.0090
3	0.0019	0.0114	0.0112	0.0063	0.0082	0.0047	0.0062	0.0074	0.0051	0.0180	0.0100	0.0090
3-1/8	0.0019	0.0114	0.0112	0.0063	0.0082	0.0047	0.0062	0.0074	0.0052	0.0180	0.0100	0.0090
3-1/4	0.0019	0.0114	0.0112	0.0063	0.0082	0.0047	0.0062	0.0075	0.0052	0.0180	0.0100	0.0090
3-3/8	0.0019	0.0114	0.0112	0.0064	0.0084	0.0048	0.0063	0.0076	0.0053	0.0180	0.0100	0.0090
3-1/2	0.0019	0.0114	0.0112	0.0064	0.0084	0.0048	0.0063	0.0076	0.0053	0.0180	0.0100	0.0090
3-5/8	0.0019	0.0114	0.0112	0.0064	0.0084	0.0048	0.0063	0.0077	0.0054	0.0180	0.0100	0.0090
3-3/4	0.0019	0.0114	0.0112	0.0064	0.0084	0.0048	0.0063	0.0078	0.0054	0.0180	0.0100	0.0090
3-7/8	0.0020	0.0114	0.0112	0.0065	0.0085	0.0049	0.0064	0.0078	0.0055	0.0180	0.0100	0.0090
4	0.0020	0.0114	0.0112	0.0065	0.0085	0.0049	0.0064	0.0079	0.0055	0.0180	0.0100	0.0090
4-1/4	0.0020	0.0114	0.0112	0.0065	0.0085	0.0049	0.0064	0.0080	0.0056	0.0180	0.0100	0.0090
4-1/2	0.0020	0.0114	0.0112	0.0065	0.0085	0.0049	0.0064	0.0081	0.0057	0.0180	0.0100	0.0090
4-3/4	0.0020	0.0114	0.0112	0.0067	0.0087	0.0050	0.0066	0.0083	0.0058	0.0180	0.0100	0.0090
5	0.0020	0.0114	0.0112	0.0067	0.0087	0.0050	0.0066	0.0084	0.0059	0.0180	0.0100	0.0090
5-1/4	0.0020	0.0114	0.0112	0.0067	0.0087	0.0050	0.0066	0.0085	0.0059	0.0180	0.0100	0.0090
5-1/2	0.0020	0.0114	0.0112	0.0067	0.0087	0.0050	0.0066	0.0086	0.0060	0.0180	0.0100	0.0090
5-3/4	0.0021	0.0114	0.0112	0.0069	0.0090	0.0052	0.0067	0.0087	0.0061	0.0180	0.0100	0.0090
6	0.0021	0.0114	0.0112	0.0069	0.0090	0.0052	0.0067	0.0088	0.0062	0.0180	0.0100	0.0090

UNIFIED AND AMERICAN SCREW THREADS-APPENDIX E

TABLE 18-ALLOWANCES AND TOLERANCES FOR 16 THREAD SERIES (16UN AND 16N)

Nominal Size	Allow-ances	Tolerances										
		Major Diameter External Threads		Pitch Diameter						Minor Diameter Internal Threads		
	Class 2A Only	Cl. 2A and 3A	Cl. 2 and 3	Class 2A	Class 2B	Class 3A	Class 3B	Class 2	Class 3	Class 2B	Class 3B	Cl. 2 and 3
3/4	0.0015	0.0094	0.0090	0.0050	0.0065	0.0038	0.0049	0.0045	0.0032	0.0141	0.0085	0.0080
13/16	0.0015	0.0094	0.0090	0.0049	0.0063	0.0036	0.0047	0.0051	0.0035	0.0141	0.0085	0.0080
7/8	0.0015	0.0094	0.0090	0.0049	0.0063	0.0036	0.0047	0.0051	0.0036	0.0141	0.0085	0.0080
15/16	0.0015	0.0094	0.0090	0.0050	0.0065	0.0037	0.0049	0.0052	0.0036	0.0141	0.0085	0.0080
1	0.0015	0.0094	0.0090	0.0050	0.0065	0.0037	0.0049	0.0052	0.0037	0.0141	0.0085	0.0080
1-1/16	0.0015	0.0094	0.0090	0.0050	0.0065	0.0037	0.0049	0.0053	0.0037	0.0141	0.0085	0.0080
1-1/8	0.0015	0.0094	0.0090	0.0050	0.0065	0.0037	0.0049	0.0054	0.0038	0.0141	0.0085	0.0080
1-3/16	0.0015	0.0094	0.0090	0.0051	0.0066	0.0038	0.0050	0.0054	0.0038	0.0141	0.0085	0.0080
1-1/4	0.0015	0.0094	0.0090	0.0051	0.0066	0.0038	0.0050	0.0055	0.0038	0.0141	0.0085	0.0080
1-5/16	0.0015	0.0094	0.0090	0.0051	0.0066	0.0038	0.0050	0.0055	0.0039	0.0141	0.0085	0.0080
1-3/8	0.0015	0.0094	0.0090	0.0051	0.0066	0.0038	0.0050	0.0056	0.0039	0.0141	0.0085	0.0080
1-7/16	0.0016	0.0094	0.0090	0.0052	0.0068	0.0039	0.0051	0.0056	0.0040	0.0141	0.0085	0.0080
1-1/2	0.0016	0.0094	0.0090	0.0052	0.0068	0.0039	0.0051	0.0057	0.0040	0.0141	0.0085	0.0080
1-9/16	0.0016	0.0094	0.0090	0.0052	0.0068	0.0039	0.0051	0.0058	0.0040	0.0141	0.0085	0.0080
1-5/8	0.0016	0.0094	0.0090	0.0052	0.0068	0.0039	0.0051	0.0058	0.0041	0.0141	0.0085	0.0080
1-11/16	0.0016	0.0094	0.0090	0.0053	0.0069	0.0040	0.0052	0.0058	0.0041	0.0141	0.0085	0.0080
1-3/4	0.0016	0.0094	0.0090	0.0053	0.0069	0.0040	0.0052	0.0059	0.0041	0.0141	0.0085	0.0080
1-13/16	0.0016	0.0094	0.0090	0.0053	0.0069	0.0040	0.0052	0.0059	0.0042	0.0141	0.0085	0.0080
1-7/8	0.0016	0.0094	0.0090	0.0053	0.0069	0.0040	0.0052	0.0060	0.0042	0.0141	0.0085	0.0080
1-15/16	0.0016	0.0094	0.0090	0.0054	0.0070	0.0040	0.0052	0.0060	0.0042	0.0141	0.0085	0.0080
2	0.0016	0.0094	0.0090	0.0054	0.0070	0.0040	0.0052	0.0061	0.0043	0.0141	0.0085	0.0080
2-1/16	0.0016	0.0094	0.0090	0.0054	0.0070	0.0040	0.0052	0.0061	0.0043	0.0141	0.0085	0.0080
2-1/8	0.0016	0.0094	0.0090	0.0054	0.0070	0.0040	0.0052	0.0062	0.0043	0.0141	0.0085	0.0080
2-3/16	0.0016	0.0094	0.0090	0.0054	0.0070	0.0040	0.0052	0.0062	0.0043	0.0141	0.0085	0.0080
2-1/4	0.0016	0.0094	0.0090	0.0054	0.0070	0.0040	0.0052	0.0062	0.0044	0.0141	0.0085	0.0080
2-5/16	0.0017	0.0094	0.0090	0.0055	0.0072	0.0041	0.0054	0.0063	0.0044	0.0141	0.0085	0.0080
2-3/8	0.0017	0.0094	0.0090	0.0055	0.0072	0.0041	0.0054	0.0063	0.0044	0.0141	0.0085	0.0080
2-7/16	0.0017	0.0094	0.0090	0.0055	0.0072	0.0041	0.0054	0.0064	0.0045	0.0141	0.0085	0.0080
2-1/2	0.0017	0.0094	0.0090	0.0055	0.0072	0.0041	0.0054	0.0064	0.0045	0.0141	0.0085	0.0080
2-5/8	0.0017	0.0094	0.0090	0.0055	0.0072	0.0041	0.0054	0.0065	0.0045	0.0141	0.0085	0.0080
2-3/4	0.0017	0.0094	0.0090	0.0055	0.0072	0.0041	0.0054	0.0066	0.0046	0.0141	0.0085	0.0080
2-7/8	0.0017	0.0094	0.0090	0.0056	0.0073	0.0042	0.0055	0.0066	0.0046	0.0141	0.0085	0.0080
3	0.0017	0.0094	0.0090	0.0056	0.0073	0.0042	0.0055	0.0067	0.0047	0.0141	0.0085	0.0080
3-1/8	0.0017	0.0094	0.0090	0.0056	0.0073	0.0042	0.0055	0.0068	0.0047	0.0141	0.0085	0.0080
3-1/4	0.0017	0.0094	0.0090	0.0056	0.0073	0.0042	0.0055	0.0069	0.0048	0.0141	0.0085	0.0080
3-3/8	0.0017	0.0094	0.0090	0.0058	0.0075	0.0043	0.0056	0.0069	0.0048	0.0141	0.0085	0.0080
3-1/2	0.0017	0.0094	0.0090	0.0058	0.0075	0.0043	0.0056	0.0070	0.0049	0.0141	0.0085	0.0080
3-5/8	0.0017	0.0094	0.0090	0.0058	0.0075	0.0043	0.0056	0.0071	0.0049	0.0141	0.0085	0.0080
3-3/4	0.0017	0.0094	0.0090	0.0058	0.0075	0.0043	0.0056	0.0071	0.0050	0.0141	0.0085	0.0080
3-7/8	0.0018	0.0094	0.0090	0.0059	0.0076	0.0044	0.0057	0.0072	0.0050	0.0141	0.0085	0.0080
4	0.0018	0.0094	0.0090	0.0059	0.0076	0.0044	0.0057	0.0072	0.0051	0.0141	0.0085	0.0080
4-1/4	0.0018	0.0094	0.0090	0.0059	0.0076	0.0044	0.0057	0.0074	0.0052	0.0141	0.0085	0.0080
4-1/2	0.0018	0.0094	0.0090	0.0059	0.0076	0.0044	0.0057	0.0075	0.0053	0.0141	0.0085	0.0080
4-3/4	0.0018	0.0094	0.0090	0.0061	0.0079	0.0045	0.0059	0.0076	0.0053	0.0141	0.0085	0.0080
5	0.0018	0.0094	0.0090	0.0061	0.0079	0.0045	0.0059	0.0077	0.0054	0.0141	0.0085	0.0080
5-1/4	0.0018	0.0094	0.0090	0.0061	0.0079	0.0045	0.0059	0.0078	0.0055	0.0141	0.0085	0.0080
5-1/2	0.0018	0.0094	0.0090	0.0061	0.0079	0.0045	0.0059	0.0079	0.0056	0.0141	0.0085	0.0080
5-3/4	0.0019	0.0094	0.0090	0.0062	0.0081	0.0047	0.0061	0.0080	0.0056	0.0141	0.0085	0.0080
6	0.0019	0.0094	0.0090	0.0062	0.0081	0.0047	0.0061	0.0081	0.0057	0.0141	0.0085	0.0080

UNIFIED AND AMERICAN SCREW THREADS-APPENDIX F

FORMULAS FOR LIMITING DIMENSIONS OF SPECIAL SERIES THREADS

UNS AND NS SERIES

CLASSES 1A, 2A, 3A, 1B, 2B, 3B, 2 AND 3

EXTERNAL THREAD

Where: D = basic major (nominal) diameter
h_s = thread height (see Table 4)
E = basic pitch diameter $(D - h_b)$
K_s = minor diameter $(D - 2h_s)$
p = pitch (in inches)

MAXIMUM MAJOR DIAMETER:

Classes 1A and 2A = Basic major diameter (D), minus allowance (see Table 20 or formula for allowance, Appendix G)
Classes 3A, 2, and 3 = Basic major diameter (D)

MINIMUM MAJOR DIAMETER:

Class 1A = Maximum, minus $0.090\sqrt[3]{p^2}$ (see Table 19)
Classes 2A and 3A = Maximum, minus $0.060\sqrt[3]{p^2}$ (see Table 19)
Classes 2 and 3 = Maximum, minus two times Class 2 pitch diameter tolerance NC and NF series (see Table 19), or minus the special-thread pitch diameter tolerance for class of thread specified (see formulas, Appendix G), whichever gives the smaller limiting value.

MAXIMUM PITCH DIAMETER:

Classes 1A and 2A = Basic pitch diameter (E), minus allowance (see Table 20)
Classes 3A, 2, and 3 = Basic pitch diameter (E)

MINIMUM PITCH DIAMETER:

All Classes = Maximum, minus pitch diameter tolerance for respective class of thread (see formulas, Appendix G)

MAXIMUM MINOR DIAMETER:

Classes 1A and 2A
To intersection of rounded root with its centerline (Design form, see Figure 1)
= Minor diameter (K_s), minus allowance (see Table 20)
To intersection of rounded root with flanks of threads (Gaging diameter, see Figure 1)
= Minor diameter (K_s), minus allowance, plus H/6 (see Tables 4 and 20)

Classes 3A, 2, and 3
To intersection of rounded root with its centerline (Design form, see Figure 1)
= Minor diameter (K_s)
To intersection of rounded root with flanks of threads (Gaging diameter, see Figure 1)
= Minor diameter (K_s), plus H/6 (see Table 4)

MINIMUM MINOR DIAMETER:

In dimensioning external threads the minimum minor diameter is not specified, being established by the crest of an unworn tool. In practice, the minor diameter of an external thread is satisfactory when accepted by a gage or gaging method that represents the maximum material condition of the internal thread.

INTERNAL THREAD

Where: D = basic major (nominal) diameter
h_n = thread height (see Table 4)
E = basic pitch diameter $(D - h_b)$
K_n = minor diameter $(D - 2h_n)$
p = pitch (in inches)

MAXIMUM MAJOR DIAMETER:

In dimensioning internal threads the maximum major diameter is not specified, being established by the crest of an unworn tool. In practice, the major diameter of an internal thread is satisfactory when accepted by a gage or gaging method that represents the maximum material condition of the external thread which has no allowance.

MINIMUM MAJOR DIAMETER:

= Basic major diameter (D)

MINIMUM PITCH DIAMETER:

= Basic pitch diameter (E)

MAXIMUM PITCH DIAMETER:

= Minimum, plus pitch diameter tolerance for class of thread specified (see formulas, Appendix G)

MINIMUM MINOR DIAMETER:

= Minimum pitch diameter (E) minus H/2, then rounded off, for sizes No. 6 and larger in Classes 1B and 2B, to the nearest 0.001 in. three place decimal; and in Class 3B to the nearest 0.0010 in. four-place decimal.

MAXIMUM MINOR DIAMETER:

= Minimum, minor diameter before rounding off, plus minor diameter tolerance from Table 29, 30 or 31, or plus the pitch diameter tolerance (see formulas, Appendix G), whichever gives the larger value, then rounded off for classes 1B and 2B to nearest 0.001 in.

LIMITATIONS OF DESIGN

Some combinations of diameter, pitch, and length of en-

gagement are impractical from a production or assembly standpoint.

In production, it is considered impractical to tap a thread unless its diameter is greater than six times the thread height; therefore, when the ratio of D to 3/4 H is less than 6, the use of a larger diameter, a finer pitch of thread, or both, should be considered.

In assembly and use, the combined tolerances and allowances on both mating parts should not allow threads to disengage on one side when assembly is eccentric. The minimum amount of overlap is arbitrary and controversial but the following general rule can be used in lieu of more specific data:

As the first step to assure the minimum safe overlap on both sides when the assembly is concentric, the difference between the minimum major diameter of the external thread and the maximum minor diameter of the internal thread should not be less than twice the addendum of the external thread (3/4 H, Table 4). (Otherwise stated, the sum of the major diameter tolerance and allowance, if any, of the external thread and the minor diameter tolerance of the internal thread should not be greater than 4/3 the addendum of the external thread, H/2. Table 4). This provides for a minimum of 50% thread engagement. As the second step to assure the minimum safe overlap on one side when the assembly is eccentric, the difference between the maximum pitch diameter of the internal thread and the minimum pitch diameter of the external thread should not be greater than twice the addendum of the external thread (3/4 H, Table 4). (Otherwise stated, the sum of the pitch diameter tolerances of both threads and the allowance, if any, should not be greater than twice the addendum of the external thread, 3/4 H, Table 4.) This provides for an eccentric assembly condition equal to the addendum of external thread (3/8 H, Table 4) and zero minimum overlap on one side. If the results from the limiting dimensions selected violate the above rules, the tolerances should be reduced by using a closer class of tolerance, assuming tolerances consistent with manufacturing possibility, or a coarser pitch should be used to increase the amount of overlap. The major diameter tolerance of the external thread or minor diameter tolerance of the internal thread should not be less than the pitch diameter tolerance of the respective thread to maintain thread form.

UNIFIED AND AMERICAN SCREW THREADS-APPENDIX F

OUTLINE GUIDE FOR DETERMINING LIMITING DIMENSIONS OF SPECIAL SERIES THREADS

SPECIAL EXTERNAL THREADS

Class	Major Diameter (D_s or B_s)		Pitch Diameter (E_s)		Minor Diameter (K_s)
	Maximum	Minimum	Maximum	Minimum	
1A	Nominal size minus allowance (Table 20) for diameter and pitch of respective thread	Maximum minus tolerance (Table 19, Col.2 and 6)	Maximum major diameter minus h_b (Table 4, Col. 13)	Maximum minus tolerance (Table 21 or Table 11) for diameter, pitch, and length of engagement of respective thread	Not specified, being established by crest of new tool and minimum minor diameter of Go-ring thread gage
2A	Nominal size minus allowance (Table 20) for diameter and pitch of respective thread	Maximum minus tolerance (Table 19, Col.3 and 7)	Maximum major diameter minus h_b (Table 4, Col. 13)	Maximum minus tolerance (Table 22 or Table 11) for diameter, pitch, and length of engagement of respective thread	Not specified, being established by crest of new tool and minimum minor diameter of Go-ring thread gage
3A	Nominal size	Maximum minus tolerance (Table 19, Col.3 and 7)	Maximum major diameter minus h_b (Table 4, Col. 13)	Maximum minus tolerance (Table 23 or Table 11) for diameter, pitch, and length of engagement of respective thread	Not specified, being established by crest of new tool and minimum minor diameter of Go-ring thread gage
2	Nominal size	Maximum minus tolerance (Table 19, Col.4 and 8)	Maximum major diameter minus h_b (Table 4, Col. 13)	Maximum minus tolerance (Table 27 or Table 12) for diameter, pitch, and length of engagement of respective thread	Not specified, being established by crest of new tool and minimum minor diameter of Go-ring thread gage
3	Nominal size	Maximum minus tolerance (Table 19, Col.4 and 8)	Maximum major diameter minus h_b (Table 4, Col. 13)	Maximum minus tolerance (Table 28 or Table 12) for diameter, pitch, and length of engagement of respective thread	Not specified, being established by crest of new tool and minimum minor diameter of Go-ring thread gage

SPECIAL INTERNAL THREADS

Class	Minor Diameter (K_n)		Pitch Diameter (E_n)		Major Diameter (D_n or B_n)
	Minimum	Maximum	Minimum	Maximum	
1B	Nominal size minus $2h_n$ (Table 4, Col. 15)	Minimum plus tolerance (Table 29 or 30) for diameter, pitch, and length of engagement of respective thread (See Appendix H)	Nominal size minus h_b (Table 4, Col. 13)	Minimum plus tolerance (Table 24 or Table 11) for diameter, pitch, and length of engagement of respective thread	Not specified, being established by crest of new tool and maximum major diameter of Go-plug thread gage
2B	Nominal size minus $2h_n$ (Table 4, Col. 15)	Minimum plus tolerance (Table 29 or 30) for diameter, pitch, and length of engagement of respective thread (See Appendix H)	Nominal size minus h_b (Table 4, Col. 13)	Minimum plus tolerance (Table 25 or Table 11) for diameter, pitch, and length of engagement of respective thread	Not specified, being established by crest of new tool and maximum major diameter of Go-plug thread gage
3B	Nominal size minus $2h_n$ (Table 4, Col. 15)	Minimum plus tolerance (Table 29 or 30) for diameter, pitch, and length of engagement of respective thread (See Appendix H)	Nominal size minus h_b (Table 4, Col. 13)	Minimum plus tolerance (Table 26 or Table 11) for diameter, pitch, and length of engagement of respective thread	Not specified, being established by crest of new tool and maximum major diameter of Go-plug thread gage
2	Nominal size minus $2h_n$ (Table 4, Col. 15)	Minimum plus tolerance (Table 31) for diameter, pitch, and length of engagement of respective thread (See Appendix H)	Nominal size minus h_b (Table 4, Col. 13)	Minimum plus tolerance (Table 27 or Table 12) for diameter, pitch, and length of engagement of respective thread	Not specified, being established by crest of new tool and maximum major diameter of Go-plug thread gage
3	Nominal size minus $2h_n$ (Table 4, Col. 15)	Minimum plus tolerance (Table 31) for diameter, pitch, and length of engagement of respective thread (See Appendix H)	Nominal size minus h_b (Table 4, Col. 13)	Minimum plus tolerance (Table 28 or Table 12) for diameter, pitch, and length of engagement of respective thread	Not specified, being established by crest of new tool and maximum major diameter of Go-plug thread gage

UNIFIED AND AMERICAN SCREW THREADS-APPENDIX G

FORMULAS AND TABLES FOR ALLOWANCES AND TOLERANCES OF SPECIAL SERIES THREADS

UNS AND NS SERIES

CLASSES 1A, 2A, 3A, 1B, 2B, 3B, 2 AND 3

EXTERNAL THREAD

Where: D = basic major (nominal) diameter
h_s = thread height (see Table 4)
L_e = length of engagement (in inches)
p = pitch (in inches)

ALLOWANCE:

Classes 1A and 2A = 0.300 Class 2A pitch diameter tolerance (see Table 20)
Classes 3A, 2, and 3 = No allowance

MAJOR DIAMETER TOLERANCE:

Class 1A = $0.090\sqrt[3]{p^2}$ (see Table 19)
Classes 2A and 3A = $0.060\sqrt[3]{p^2}$ (see Table 19)
Classes 2 and 3 = Two times Class 2 pitch diameter tolerance NC and NF series (see Table 19), or the special thread pitch diameter tolerance (see formulas immediately following) for class of thread specified, whichever is the larger value.

PITCH DIAMETER TOLERANCE:

Class 1A = 1.500 Class 2A pitch diameter tolerance (see Table 21)
*Class 2A = $0.0015\sqrt[3]{D} + 0.0015\sqrt{L_e} + 0.015\sqrt[3]{p^2}$ (see Table 22)
Class 3A = 0.750 Class 2A pitch diameter tolerance (see Table 23)
*Class 2 = $0.002\sqrt{D} + 0.00133L_e + 0.010\sqrt{p}$ (see Table 27)
Class 3 = 70% of Class 2 pitch diameter tolerance (see Table 28)

MINOR DIAMETER TOLERANCE:

Classes 1A, 2A, 3A, 2, and 3
To intersection of rounded root with its centerline (Design form, see Figure 1)
= Pitch diameter tolerance for class of thread specified plus H/12 (1/2 of H/6) (see Table 4)
To intersection of rounded root with flanks of threads (Gaging diameter, see Figure 1)
= Pitch diameter tolerance for class of thread specified, plus H/4 (see Table 4)

The tolerance for minor diameter is for reference only. In dimensioning external threads the minimum minor diameter is not specified, being established by the crest of an unworn tool. In practice, the minor diameter of an external thread is satisfactory when accepted by a gage or gaging method that represents the maximum material condition of the internal thread less the allowances, if any.

INTERNAL THREAD

Where: D = basic major (nominal) diameter
h_n = thread height (see Table 4)
L_e = length of engagement (in inches)
p = pitch (in inches)

MAJOR DIAMETER TOLERANCE:

Classes 1B, 2B, 3B, 2, and 3 = H/6 (see Table 4) plus the pitch diameter tolerance for the thread class under consideration.

The tolerance for major diameter is for reference only. In dimensioning internal threads the maximum major diameter is not specified, being established by the crest of an unworn tool. In practice, the major diameter of an internal thread is satisfactory when accepted by a gage or gaging method that represents the maximum material condition of an external thread which has no allowance.

PITCH DIAMETER TOLERANCE:

Class 1B = 1.950 Class 2A pitch diameter tolerance (1.5 Class 2B) (see Table 24)
Class 2B = 1.300 Class 2A pitch diameter tolerance (see Table 25)
Class 3B = 0.975 Class 2A pitch diameter tolerance (0.750 Class 2B) (see Table 26)
** Class 2 = $0.002\sqrt{D} + 0.00133L_e + 0.010\sqrt{p}$ (see Table 27)
Class 3 = 70% of Class 2 pitch diameter tolerance (see Table 28)

MINOR DIAMETER TOLERANCE:

Classes 1B, 2B, and 3B = Tolerances derived from formulas for minor diameter tolerance of standard internal threads (see Appendix E) or taken from Tables 29 and 30, as applicable (see Appendix H), or the pitch diameter tolerance, whichever is the greater value.

Classes 2 and 3 = Tolerances derived from formulas for minor diameter tolerance of standard internal threads (see Appendix E), or taken from Table 31, (see Appendix H), or the pitch diameter tolerance, whichever is the greatest value.

* See Tables 11 and 12 (Appendix E) for values of these terms corresponding to given values of diameter, length of engagement, and pitch.

** See Table 12 (Appendix E) for values of these terms corresponding to given values of diameter, length of engagement, and pitch.

TABLE 19 - CLASSES 1A, 2A, 3A, 2, AND 3, MAJOR DIAMETER TOLERANCES FOR EXTERNAL THREADS OF SPECIAL DIAMETERS, PITCHES, AND LENGTHS OF ENGAGEMENT (UNS AND NS SERIES)

Threads Per Inch	Major Diameter Tolerance			Threads Per Inch	Major Diameter Tolerance		
	Class 1A	Class 2A Class 3A	Class 2 Class 3		Class 1A	Class 2A Class 3A	Class 2 Class 3
80	—	0.0032	0.0034	20	0.0122	0.0081	0.0072
72	—	0.0035	0.0036	18	0.0131	0.0087	0.0082
64	—	0.0038	0.0038	16	0.0142	0.0094	0.0090
56	—	0.0041	0.0040	14	0.0155	0.0103	0.0098
48	—	0.0045	0.0040	12	0.0172	0.0114	0.0112
40	0.0077	0.0051	0.0048	10	0.0194	0.0129	0.0128
36	0.0083	0.0055	0.0050	8	0.0225	0.0150	0.0152
32	0.0089	0.0060	0.0054	7	0.0246	0.0164	0.0170
28	0.0098	0.0065	0.0062	6	0.0273	0.0182	0.0202
24	0.0108	0.0072	0.0066	4	0.0357	0.0238	0.0280

TABLE 20 - CLASSES 1A, AND 2A, ALLOWANCES FOR EXTERNAL THREADS OF SPECIAL DIAMETERS, AND PITCHES (UNS AND NS SERIES)

Threads Per Inch	Basic Major (Nominal) Diameter																							
	1/16 0.0600 to 0.0781	3/32 0.0782 to 0.1094	1/8 0.1095 to 0.1563	3/16 0.1564 to 0.2188	1/4 0.2189 to 0.3125	3/8 0.3126 to 0.4375	1/2 0.4376 to 0.5625	5/8 0.5626 to 0.6875	3/4 0.6876 to 0.8750	1 0.8751 to 1.1250	1-1/4 1.1251 to 1.3750	1-1/2 1.3751 to 1.6250	1-3/4 1.6251 to 1.8750	2 1.8751 to 2.2500	2-1/2 2.2501 to 2.7500	3 2.7501 to 3.2500	3-1/2 3.2501 to 3.7500	4 3.7501 to 4.5000	5 4.5001 to 5.5000	6 5.5001 to 7.0000	8 7.0001 to 9.0000	10 9.0001 to 11.0000	12 11.0001 to 13.0000
80	0.0006	0.0006	0.0006	0.0007	0.0007	—	—	—	—	—	—	—	—	—	—								
72	0.0006	0.0006	0.0006	0.0007	0.0007	0.0007	—	—	—	—	—	—	—	—	—								
64	0.0006	0.0007	0.0007	0.0007	0.0007	0.0008	0.0008	—	—	—	—	—	—	—	—								
56	—	0.0007	0.0007	0.0007	0.0008	0.0008	0.0009	0.0009	0.0009	—	—	—	—	—	—								
48	—	0.0007	0.0008	0.0008	0.0008	0.0009	0.0009	0.0009	0.0009	—	—	—	—	—	—								
40	—	—	0.0008	0.0009	0.0009	0.0009	0.0010	0.0010	0.0010	0.0010	—	—	—	—	—	—	—	—	—	—	—	—	—
36	—	—	0.0009	0.0009	0.0009	0.0010	0.0010	0.0010	0.0010	0.0011	0.0011	0.0012	—	—	—	—	—	—	—	—	—	—	—
32	—	—	0.0009	0.0009	0.0010	0.0010	0.0010	0.0011	0.0011	0.0011	0.0012	0.0012	0.0012	0.0013	0.0013	0.0013	—	—	—	—	—	—	—
28	—	—	—	0.0010	0.0010	0.0011	0.0011	0.0011	0.0012	0.0012	0.0012	0.0013	0.0013	0.0013	0.0014	0.0014	0.0014	0.0015	—	—	—	—	—
24	—	—	—	0.0011	0.0011	0.0011	0.0012	0.0012	0.0012	0.0013	0.0013	0.0013	0.0014	0.0014	0.0014	0.0015	0.0015	0.0015	0.0016	0.0016	—	—	—
20	—	—	—	—	0.0012	0.0012	0.0013	0.0013	0.0013	0.0014	0.0014	0.0014	0.0015	0.0015	0.0015	0.0016	0.0016	0.0016	0.0017	0.0017	—	—	—
18	—	—	—	—	—	0.0013	0.0013	0.0014	0.0014	0.0014	0.0015	0.0015	0.0015	0.0015	0.0016	0.0016	0.0017	0.0017	0.0017	0.0018	0.0019	—	—
16	—	—	—	—	—	0.0014	0.0014	0.0014	0.0015	0.0015	0.0015	0.0016	0.0016	0.0016	0.0017	0.0017	0.0017	0.0018	0.0018	0.0019	0.0019	0.0020	—
14	—	—	—	—	—	—	0.0015	0.0015	0.0015	0.0016	0.0016	0.0017	0.0017	0.0017	0.0017	0.0018	0.0018	0.0018	0.0019	0.0020	0.0020	0.0021	0.0022
12	—	—	—	—	—	—	0.0016	0.0016	0.0017	0.0017	0.0017	0.0018	0.0018	0.0018	0.0019	0.0019	0.0019	0.0020	0.0020	0.0021	0.0021	0.0022	0.0023
10	—	—	—	—	—	—	—	—	0.0018	0.0018	0.0019	0.0019	0.0019	0.0020	0.0020	0.0020	0.0021	0.0021	0.0022	0.0022	0.0023	0.0024	0.0024
8	—	—	—	—	—	—	—	—	—	0.0021	0.0021	0.0021	0.0021	0.0022	0.0022	0.0023	0.0023	0.0023	0.0024	0.0024	0.0025	0.0026	0.0026
6	—	—	—	—	—	—	—	—	—	—	—	0.0024	0.0025	0.0025	0.0025	0.0026	0.0026	0.0026	0.0027	0.0027	0.0028	0.0029	0.0029
4	—	—	—	—	—	—	—	—	—	—	—	—	—	0.0030	0.0031	0.0031	0.0031	0.0032	0.0032	0.0033	0.0034	0.0034	0.0035

NOTE

Classes 1A and 2A allowances are determined by multiplying Class 2A pitch diameter tolerances (computed to six decimal places) by 0.3 and are based on lengths of engagement of nine pitches.

UNIFIED AND AMERICAN SCREW THREADS - APPENDIX G

TABLE 21 - CLASS 1A, PITCH DIAMETER TOLERANCES FOR EXTERNAL THREADS OF SPECIAL DIAMETERS, PITCHES, AND LENGTHS OF ENGAGEMENT (UNS AND NS SERIES)

Threads Per Inch	Length of Engagement		Basic Major (Nominal) Diameter									
	Number of Pitches	Inches	1/16 0.0600 to 0.0781	3/32 0.0782 to 0.1094	1/8 0.1095 to 0.1563	3/16 0.1564 to 0.2188	1/4 0.2189 to 0.3125	3/8 0.3126 to 0.4375	1/2 0.4376 to 0.5625	5/8 0.5626 to 0.6875	3/4 0.6876 to 0.8750	1 0.8751 to 1.1250
80	5 to 15	0.06 to 0.19	—	—	—	—	—	—	—	—	—	—
	16 to 30	0.191 to 0.38	—	—	—	—	—	—	—	—	—	—
72	5 to 15	0.07 to 0.21	—	—	—	—	—	—	—	—	—	—
	16 to 30	0.211 to 0.42	—	—	—	—	—	—	—	—	—	—
64	5 to 15	0.08 to 0.23	—	—	—	—	—	—	—	—	—	—
	16 to 30	0.231 to 0.46	—	—	—	—	—	—	—	—	—	—
56	5 to 15	0.09 to 0.27	—	—	—	—	—	—	—	—	—	—
	16 to 30	0.271 to 0.54	—	—	—	—	—	—	—	—	—	—
48	5 to 15	0.10 to 0.31	—	—	—	—	—	—	—	—	—	—
	16 to 30	0.311 to 0.62	—	—	—	—	—	—	—	—	—	—
40	5 to 15	0.12 to 0.38	—	—	0.0041	0.0043	0.0044	0.0046	0.0048	0.0049	0.0050	0.0052
	16 to 30	0.381 to 0.76	—	—	0.0046	0.0048	0.0049	0.0051	0.0053	0.0054	0.0056	0.0058
36	5 to 15	0.14 to 0.42	—	—	0.0043	0.0045	0.0046	0.0048	0.0050	0.0051	0.0052	0.0054
	16 to 30	0.421 to 0.84	—	—	—	0.0050	0.0052	0.0054	0.0055	0.0057	0.0058	0.0060
32	5 to 15	0.16 to 0.47	—	—	0.0045	0.0047	0.0048	0.0050	0.0052	0.0053	0.0055	0.0057
	16 to 30	0.471 to 0.94	—	—	—	0.0053	0.0054	0.0056	0.0058	0.0059	0.0061	0.0063
28	5 to 15	0.18 to 0.54	—	—	—	0.0050	0.0051	0.0053	0.0055	0.0056	0.0058	0.0060
	16 to 30	0.541 to 1.08	—	—	—	0.0056	0.0058	0.0060	0.0061	0.0063	0.0064	0.0066
24	5 to 15	0.21 to 0.62	—	—	—	0.0054	0.0055	0.0057	0.0059	0.0060	0.0061	0.0063
	16 to 30	0.621 to 1.24	—	—	—	—	0.0062	0.0064	0.0065	0.0067	0.0068	0.0070
20	5 to 15	0.25 to 0.75	—	—	—	—	0.0060	0.0062	0.0063	0.0065	0.0066	0.0068
	16 to 30	0.751 to 1.50	—	—	—	—	0.0067	0.0069	0.0071	0.0072	0.0073	0.0076
18	5 to 15	0.28 to 0.83	—	—	—	—	—	0.0065	0.0067	0.0068	0.0069	0.0071
	16 to 30	0.831 to 1.66	—	—	—	—	—	0.0073	0.0074	0.0076	0.0077	0.0079
16	5 to 15	0.31 to 0.94	—	—	—	—	—	0.0069	0.0070	0.0072	0.0073	0.0075
	16 to 30	0.941 to 1.88	—	—	—	—	—	0.0076	0.0077	0.0079	0.0080	0.0082
14	5 to 15	0.36 to 1.07	—	—	—	—	—	—	0.0075	0.0076	0.0077	0.0079
	16 to 30	1.071 to 2.14	—	—	—	—	—	—	0.0083	0.0085	0.0086	0.0088
12	5 to 15	0.42 to 1.25	—	—	—	—	—	—	0.0080	0.0082	0.0083	0.0085
	16 to 30	1.251 to 2.50	—	—	—	—	—	—	0.0090	0.0091	0.0092	0.0094
10	5 to 15	0.50 to 1.50	—	—	—	—	—	—	—	—	0.0090	0.0092
	16 to 30	1.501 to 3.00	—	—	—	—	—	—	—	—	0.0101	0.0103
8	5 to 15	0.62 to 1.88	—	—	—	—	—	—	—	—	—	0.0103
	16 to 30	1.881 to 3.76	—	—	—	—	—	—	—	—	—	0.0114
7	5 to 15	0.71 to 2.14	—	—	—	—	—	—	—	—	—	—
	16 to 30	2.141 to 4.29	—	—	—	—	—	—	—	—	—	—
6	5 to 15	0.83 to 2.50	—	—	—	—	—	—	—	—	—	—
	16 to 30	2.501 to 5.00	—	—	—	—	—	—	—	—	—	—
4	5 to 15	1.25 to 3.75	—	—	—	—	—	—	—	—	—	—
	16 to 30	3.751 to 7.50	—	—	—	—	—	—	—	—	—	—

UNIFIED AND AMERICAN SCREW THREADS - APPENDIX G

TABLE 21 (CONTINUED) CLASS 1A, PITCH DIAMETER TOLERANCES FOR EXTERNAL THREADS OF SPECIAL DIAMETERS, PITCHES, AND LENGTHS OF ENGAGEMENT (UNS AND NS SERIES)

Basic Major (Nominal) Diameter													Threads Per Inch
1-1/4 1.1251 to 1.3750	1-1/2 1.3751 to 1.6250	1-3/4 1.6251 to 1.8750	2 1.8751 to 2.2500	2-1/2 2.2501 to 2.7500	3 2.7501 to 3.2500	3-1/2 3.2501 to 3.7500	4 3.7501 to 4.5000	5 4.5001 to 5.5000	6 5.5001 to 7.0000	8 7.0001 to 9.0000	10 9.0001 to 11.0000	12 11.0001 to 13.0000	
—	—	—	—	—									80
—	—	—	—	—									
—	—	—	—	—									72
—	—	—	—	—									
—	—	—	—	—									64
—	—	—	—	—									
—	—	—	—	—									56
—	—	—	—	—									
—	—	—	—	—									48
—	—	—	—	—									
—	—	—	—	—									40
—	—	—	—	—									
0.0056	0.0058	—	—	—	—	—	—	—	—	—	—	—	36
0.0062	0.0063	—	—	—	—	—	—	—	—	—	—	—	
0.0058	0.0060	0.0061	0.0063	0.0065	0.0067	—	—	—	—	—	—	—	32
0.0064	0.0066	0.0067	0.0068	0.0071	0.0073	—	—	—	—	—	—	—	
0.0061	0.0063	0.0064	0.0066	0.0068	0.0070	0.0071	0.0073	—	—	—	—	—	28
0.0068	0.0069	0.0071	0.0072	0.0074	0.0076	0.0078	0.0079	—	—	—	—	—	
0.0065	0.0067	0.0068	0.0069	0.0071	0.0073	0.0075	0.0077	0.0079	0.0082	—	—	—	24
0.0072	0.0073	0.0075	0.0076	0.0078	0.0080	0.0082	0.0083	0.0086	0.0088	—	—	—	
0.0070	0.0071	0.0073	0.0074	0.0076	0.0078	0.0080	0.0081	0.0084	0.0087	—	—	—	20
0.0077	0.0079	0.0080	0.0081	0.0084	0.0085	0.0087	0.0089	0.0092	0.0094	—	—	—	
0.0073	0.0074	0.0076	0.0077	0.0079	0.0081	0.0083	0.0084	0.0087	0.0090	0.0094	—	—	18
0.0081	0.0082	0.0084	0.0085	0.0087	0.0089	0.0091	0.0092	0.0095	0.0097	0.0101	—	—	
0.0077	0.0078	0.0079	0.0081	0.0083	0.0085	0.0086	0.0088	0.0091	0.0093	0.0097	0.0101	—	16
0.0084	0.0085	0.0086	0.0088	0.0090	0.0092	0.0093	0.0095	0.0098	0.0100	0.0104	0.0108	—	
0.0081	0.0083	0.0084	0.0085	0.0087	0.0089	0.0091	0.0092	0.0095	0.0098	0.0102	0.0105	0.0108	14
0.0090	0.0091	0.0093	0.0094	0.0096	0.0098	0.0100	0.0101	0.0104	0.0107	0.0111	0.0114	0.0117	
0.0087	0.0088	0.0090	0.0091	0.0093	0.0095	0.0097	0.0098	0.0101	0.0103	0.0107	0.0111	0.0114	12
0.0096	0.0098	0.0099	0.0100	0.0103	0.0104	0.0106	0.0108	0.0110	0.0113	0.0117	0.0120	0.0123	
0.0094	0.0096	0.0097	0.0098	0.0100	0.0102	0.0104	0.0106	0.0108	0.0111	0.0115	0.0118	0.0121	10
0.0105	0.0106	0.0107	0.0109	0.0111	0.0113	0.0114	0.0116	0.0119	0.0121	0.0125	0.0129	0.0132	
0.0104	0.0106	0.0107	0.0108	0.0111	0.0113	0.0114	0.0116	0.0119	0.0121	0.0125	0.0129	0.0132	8
0.0116	0.0118	0.0119	0.0120	0.0122	0.0124	0.0126	0.0128	0.0130	0.0133	0.0137	0.0140	0.0143	
0.0111	0.0113	0.0114	0.0115	0.0118	0.0119	0.0121	0.0123	0.0125	0.0128	0.0132	0.0135	0.0139	7
0.0124	0.0125	0.0127	0.0128	0.0130	0.0132	0.0134	0.0135	0.0138	0.0140	0.0145	0.0148	0.0151	
—	0.0121	0.0123	0.0124	0.0126	0.0128	0.0130	0.0131	0.0134	0.0137	0.0141	0.0144	0.0147	6
—	0.0135	0.0136	0.0138	0.0140	0.0142	0.0143	0.0145	0.0148	0.0150	0.0154	0.0158	0.0161	
—	—	—	0.0151	0.0154	0.0155	0.0157	0.0159	0.0162	0.0164	0.0168	0.0172	0.0175	4
—	—	—	0.0168	0.0170	0.0172	0.0174	0.0175	0.0178	0.0180	0.0185	0.0188	0.0191	

NOTES

1. These values do not agree with and shall not be used in place of any tabulated values for the UNC, UNF, and 8N thread series, in Table 2.
2. Formula:
   Class 1A tolerances for external threads are determined by multiplying Class 2A tolerances (computed to six decimal places) by 1.500. See Note 2, Table 22, for formula for Class 2A tolerances.
3. Length of engagement increments included in the tabulated tolerances for lengths of engagement of from 5 to 15 pitches are based on lengths of 9 pitches; those for lengths of engagement greater than 15 to 30 pitches are based on lengths of 20 pitches. For lengths of engagement not tabulated, the formula in Note 2 should be applied.
4. Pitches listed are those used most commonly and are recommended. Where intermediate pitches are specified, the formula in Note 2 should be applied.
5. Tolerances are tabulated only for combinations of diameter, pitch, and length of engagement which are considered to be generally used. For other combinations encountered, see Limitations of Design, Appendix F.

UNIFIED AND AMERICAN SCREW THREADS - APPENDIX G

TABLE 22 - CLASS 2A, PITCH DIAMETER TOLERANCES FOR EXTERNAL THREADS OF SPECIAL DIAMETERS, PITCHES, AND LENGTHS OF ENGAGEMENT (UNS AND NS SERIES)

Threads Per Inch	Length of Engagement		Basic Major (Nominal) Diameter									
	Number of Pitches	Inches	1/16 0.0600 to 0.0781	3/32 0.0782 to 0.1094	1/8 0.1095 to 0.1563	3/16 0.1564 to 0.2188	1/4 0.2189 to 0.3125	3/8 0.3126 to 0.4375	1/2 0.4376 to 0.5625	5/8 0.5626 to 0.6875	3/4 0.6876 to 0.8750	1 0.8751 to 1.1250
80	5 to 15	0.06 to 0.19	0.0019	0.0020	0.0021	0.0022	0.0023	—	—	—	—	—
	16 to 30	0.191 to 0.38	0.0022	0.0022	0.0023	0.0024	0.0025	—	—	—	—	—
72	5 to 15	0.07 to 0.21	0.0020	0.0021	0.0021	0.0023	0.0023	0.0025	—	—	—	—
	16 to 30	0.211 to 0.42	—	0.0023	0.0024	0.0025	0.0026	0.0027	—	—	—	—
64	5 to 15	0.08 to 0.23	0.0021	0.0022	0.0022	0.0024	0.0024	0.0026	0.0027	—	—	—
	16 to 30	0.231 to 0.46	—	0.0025	0.0025	0.0026	0.0027	0.0029	0.0030	—	—	—
56	5 to 15	0.09 to 0.27	—	0.0023	0.0024	0.0025	0.0026	0.0027	0.0028	0.0029	0.0030	—
	16 to 30	0.271 to 0.54	—	0.0026	0.0027	0.0028	0.0029	0.0030	0.0031	0.0032	0.0033	—
48	5 to 15	0.10 to 0.31	—	0.0025	0.0025	0.0026	0.0027	0.0029	0.0030	0.0031	0.0031	—
	16 to 30	0.311 to 0.62	—	—	0.0029	0.0030	0.0030	0.0032	0.0033	0.0034	0.0035	—
40	5 to 15	0.12 to 0.38	—	—	0.0027	0.0029	0.0029	0.0031	0.0032	0.0033	0.0034	0.0035
	16 to 30	0.381 to 0.76	—	—	0.0031	0.0032	0.0033	0.0034	0.0035	0.0036	0.0037	0.0038
36	5 to 15	0.14 to 0.42	—	—	0.0029	0.0030	0.0031	0.0032	0.0033	0.0034	0.0035	0.0036
	16 to 30	0.421 to 0.84	—	—	—	0.0034	0.0034	0.0036	0.0037	0.0038	0.0039	0.0040
32	5 to 15	0.16 to 0.47	—	—	0.0030	0.0031	0.0032	0.0034	0.0035	0.0036	0.0036	0.0038
	16 to 30	0.471 to 0.94	—	—	—	0.0035	0.0036	0.0038	0.0039	0.0040	0.0040	0.0042
28	5 to 15	0.18 to 0.54	—	—	—	0.0033	0.0034	0.0036	0.0037	0.0038	0.0038	0.0040
	16 to 30	0.541 to 1.08	—	—	—	0.0038	0.0038	0.0040	0.0041	0.0042	0.0043	0.0044
24	5 to 15	0.21 to 0.62	—	—	—	0.0036	0.0037	0.0038	0.0039	0.0040	0.0041	0.0042
	16 to 30	0.621 to 1.24	—	—	—	—	0.0041	0.0043	0.0044	0.0045	0.0045	0.0047
20	5 to 15	0.25 to 0.75	—	—	—	—	0.0040	0.0041	0.0042	0.0043	0.0044	0.0045
	16 to 30	0.751 to 1.50	—	—	—	—	0.0045	0.0046	0.0047	0.0048	0.0049	0.0050
18	5 to 15	0.28 to 0.83	—	—	—	—	—	0.0043	0.0044	0.0045	0.0046	0.0047
	16 to 30	0.831 to 1.66	—	—	—	—	—	0.0048	0.0050	0.0050	0.0051	0.0053
16	5 to 15	0.31 to 0.94	—	—	—	—	—	0.0046	0.0047	0.0048	0.0049	0.0050
	16 to 30	0.941 to 1.88	—	—	—	—	—	0.0050	0.0051	0.0052	0.0053	0.0055
14	5 to 15	0.36 to 1.07	—	—	—	—	—	—	0.0050	0.0051	0.0051	0.0053
	16 to 30	1.071 to 2.14	—	—	—	—	—	—	0.0056	0.0057	0.0057	0.0059
12	5 to 15	0.42 to 1.25	—	—	—	—	—	—	0.0054	0.0054	0.0055	0.0057
	16 to 30	1.251 to 2.50	—	—	—	—	—	—	0.0060	0.0061	0.0062	0.0063
10	5 to 15	0.50 to 1.50	—	—	—	—	—	—	—	—	0.0060	0.0062
	16 to 30	1.501 to 3.00	—	—	—	—	—	—	—	—	0.0067	0.0069
8	5 to 15	0.62 to 1.88	—	—	—	—	—	—	—	—	—	0.0068
	16 to 30	1.881 to 3.76	—	—	—	—	—	—	—	—	—	0.0076
7	5 to 15	0.71 to 2.14	—	—	—	—	—	—	—	—	—	—
	16 to 30	2.141 to 4.29	—	—	—	—	—	—	—	—	—	—
6	5 to 15	0.83 to 2.50	—	—	—	—	—	—	—	—	—	—
	16 to 30	2.501 to 5.00	—	—	—	—	—	—	—	—	—	—
4	5 to 15	1.25 to 3.75	—	—	—	—	—	—	—	—	—	—
	16 to 30	3.751 to 7.50	—	—	—	—	—	—	—	—	—	—

UNIFIED AND AMERICAN SCREW THREADS - APPENDIX G

TABLE 22 (CONTINUED) CLASS 2A, PITCH DIAMETER TOLERANCES FOR EXTERNAL THREADS OF SPECIAL DIAMETERS, PITCHES, AND LENGTHS OF ENGAGEMENT (UNS AND NS SERIES)

Basic Major (Nominal) Diameter													Threads Per Inch
1-1/4 1.1251 to 1.3750	1-1/2 1.3751 to 1.6250	1-3/4 1.6251 to 1.8750	2 1.8751 to 2.2500	2-1/2 2.2501 to 2.7500	3 2.7501 to 3.2500	3-1/2 3.2501 to 3.7500	4 3.7501 to 4.5000	5 4.5001 to 5.5000	6 5.5001 to 7.0000	8 7.0001 to 9.0000	10 9.0001 to 11.0000	12 11.0001 to 13.0000	
—	—	—	—	—									80
—	—	—	—	—									
—	—	—	—	—									72
—	—	—	—	—									
—	—	—	—	—									64
—	—	—	—	—									
—	—	—	—	—									56
—	—	—	—	—									
—	—	—	—	—									48
—	—	—	—	—									
—	—	—	—	—									40
—	—	—	—	—									
0.0037	0.0038	—	—	—	—	—	—	—	—	—	—	—	36
0.0041	0.0042	—	—	—	—	—	—	—	—	—	—	—	
0.0039	0.0040	0.0041	0.0042	0.0043	0.0044	—	—	—	—	—	—	—	32
0.0043	0.0044	0.0045	0.0046	0.0047	0.0048	—	—	—	—	—	—	—	
0.0041	0.0042	0.0043	0.0044	0.0045	0.0046	0.0048	0.0049	—	—	—	—	—	28
0.0045	0.0046	0.0047	0.0048	0.0049	0.0051	0.0052	0.0053	—	—	—	—	—	
0.0043	0.0044	0.0045	0.0046	0.0048	0.0049	0.0050	0.0051	0.0053	0.0054	—	—	—	24
0.0048	0.0049	0.0050	0.0051	0.0052	0.0053	0.0054	0.0056	0.0057	0.0059	—	—	—	
0.0047	0.0048	0.0048	0.0049	0.0051	0.0052	0.0053	0.0054	0.0056	0.0058	—	—	—	20
0.0052	0.0053	0.0053	0.0054	0.0056	0.0057	0.0058	0.0059	0.0061	0.0063	—	—	—	
0.0049	0.0050	0.0051	0.0051	0.0053	0.0054	0.0055	0.0056	0.0058	0.0060	0.0062	—	—	18
0.0054	0.0055	0.0056	0.0057	0.0058	0.0059	0.0060	0.0061	0.0063	0.0065	0.0068	—	—	
0.0051	0.0052	0.0053	0.0054	0.0055	0.0056	0.0058	0.0059	0.0061	0.0062	0.0065	0.0067	—	16
0.0056	0.0057	0.0058	0.0058	0.0060	0.0061	0.0062	0.0063	0.0065	0.0067	0.0070	0.0072	—	
0.0054	0.0055	0.0056	0.0057	0.0058	0.0059	0.0061	0.0062	0.0064	0.0065	0.0068	0.0070	0.0072	14
0.0060	0.0061	0.0062	0.0063	0.0064	0.0065	0.0067	0.0068	0.0069	0.0071	0.0074	0.0076	0.0078	
0.0058	0.0059	0.0060	0.0061	0.0062	0.0063	0.0064	0.0065	0.0067	0.0069	0.0072	0.0074	0.0076	12
0.0064	0.0065	0.0066	0.0067	0.0068	0.0070	0.0071	0.0072	0.0074	0.0075	0.0078	0.0080	0.0082	
0.0063	0.0064	0.0065	0.0065	0.0067	0.0068	0.0069	0.0070	0.0072	0.0074	0.0077	00.079	0.0081	10
0.0070	0.0071	0.0072	0.0072	0.0074	0.0075	0.0076	0.0077	0.0079	0.0081	0.0084	0.0086	0.0088	
0.0070	0.0071	0.0071	0.0072	0.0074	0.0075	0.0076	0.0077	0.0079	0.0081	0.0083	0.0086	0.0088	8
0.0077	0.0078	0.0079	0.0080	0.0082	0.0083	0.0084	0.0085	0.0087	0.0088	0.0091	0.0094	0.0096	
0.0074	0.0075	0.0076	0.0077	0.0078	0.0080	0.0081	0.0082	0.0084	0.0085	0.0088	0.0090	0.0092	7
0.0082	0.0084	0.0084	0.0085	0.0087	0.0088	0.0089	0.0090	0.0092	0.0094	0.0096	0.0099	0.0101	
—	0.0081	0.0082	0.0083	0.0084	0.0085	0.0087	0.0088	0.0089	0.0091	0.0094	0.0096	0.0098	6
—	0.0090	0.0091	0.0092	0.0093	0.0094	0.0096	0.0097	0.0098	0.0100	0.0103	0.0105	0.0107	
—	—	—	0.0101	0.0102	0.0104	0.0105	0.0106	0.0108	0.0109	0.0112	0.0114	0.0116	4
—	—	—	0.0112	0.0113	0.0115	0.0116	0.0117	0.0119	0.0120	0.0123	0.0125	0.0127	

NOTES

1. These values do not agree with and shall not be used in place of any tabulated values for the UNC, UNF, and 8N thread series, in Table 2.
2. Formula:
   Class 2A Tolerances $= 0.0015\sqrt[3]{D} + 0.0015\sqrt{L_e} + 0.015\sqrt[3]{p^2}$
   Where: D = basic major diameter
   L_e = length of engagement
   p = pitch
3. Length of engagement increments included in the tabulated tolerances for lengths of engagement of from 5 to 15 pitches are based on lengths of 9 pitches; those for lengths of engagement greater than 15 to 30 pitches are based on lengths of 20 pitches. For lengths of engagement not tabulated, the formula in Note 2 should be applied.
4. Pitches listed are those used most commonly and are recommended. Where intermediate pitches are specified, the formula in Note 2 should be applied.
5. Tolerances are tabulated only for combinations of diameter, pitch, and length of engagement which are considered to be generally used. For other combinations encountered, see Limitations of Design, Appendix F.

UNIFIED AND AMERICAN SCREW THREADS - APPENDIX G

TABLE 23 - CLASS 3A, PITCH DIAMETER TOLERANCES FOR EXTERNAL THREADS OF SPECIAL DIAMETERS, PITCHES, AND LENGTHS OF ENGAGEMENT (UNS AND NS SERIES)

Threads Per Inch	Length of Engagement		Basic Major (Nominal) Diameter									
	Number of Pitches	Inches	1/16 0.0600 to 0.0781	3/32 0.0782 to 0.1094	1/8 0.1095 to 0.1563	3/16 0.1564 to 0.2188	1/4 0.2189 to 0.3125	3/8 0.3126 to 0.4375	1/2 0.4376 to 0.5625	5/8 0.5626 to 0.6875	3/4 0.6876 to 0.8750	1 0.8751 to 1.1250
80	5 to 15	0.06 to 0.19	0.0014	0.0015	0.0015	0.0016	0.0017	—	—	—	—	—
	16 to 30	0.191 to 0.38	0.0016	0.0017	0.0017	0.0018	0.0019	—	—	—	—	—
72	5 to 15	0.07 to 0.21	0.0015	0.0016	0.0016	0.0017	0.0018	0.0019	—	—	—	—
	16 to 30	0.211 to 0.42	—	0.0018	0.0018	0.0019	0.0020	0.0021	—	—	—	—
64	5 to 15	0.08 to 0.23	0.0016	0.0016	0.0017	0.0018	0.0018	0.0019	0.0020	—	—	—
	16 to 30	0.231 to 0.46	—	0.0018	0.0019	0.0020	0.0020	0.0021	0.0022	—	—	—
56	5 to 15	0.09 to 0.27	—	0.0017	0.0018	0.0019	0.0019	0.0020	0.0021	0.0022	0.0022	—
	16 to 30	0.271 to 0.54	—	0.0020	0.0020	0.0021	0.0021	0.0023	0.0023	0.0024	0.0025	—
48	5 to 15	0.10 to 0.31	—	0.0019	0.0019	0.0020	0.0020	0.0022	0.0022	0.0023	0.0024	—
	16 to 30	0.311 to 0.62	—	—	0.0021	0.0022	0.0023	0.0024	0.0025	0.0025	0.0026	—
40	5 to 15	0.12 to 0.38	—	—	0.0021	0.0021	0.0022	0.0023	0.0024	0.0025	0.0025	0.0026
	16 to 30	0.381 to 0.76	—	—	0.0023	0.0024	0.0025	0.0026	0.0027	0.0027	0.0028	0.0029
36	5 to 15	0.14 to 0.42	—	—	0.0022	0.0022	0.0023	0.0024	0.0025	0.0026	0.0026	0.0027
	16 to 30	0.421 to 0.84	—	—	—	0.0025	0.0026	0.0027	0.0028	0.0028	0.0029	0.0030
32	5 to 15	0.16 to 0.47	—	—	0.0023	0.0024	0.0024	0.0025	0.0026	0.0027	0.0027	0.0028
	16 to 30	0.471 to 0.94	—	—	—	0.0026	0.0027	0.0028	0.0029	0.0030	0.0030	0.0031
28	5 to 15	0.18 to 0.54	—	—	—	0.0025	0.0026	0.0027	0.0028	0.0028	0.0029	0.0030
	16 to 30	0.541 to 1.08	—	—	—	0.0028	0.0029	0.0030	0.0031	0.0031	0.0032	0.0033
24	5 to 15	0.21 to 0.62	—	—	—	0.0027	0.0028	0.0029	0.0029	0.0030	0.0031	0.0032
	16 to 30	0.621 to 1.24	—	—	—	—	0.0031	0.0032	0.0033	0.0033	0.0034	0.0035
20	5 to 15	0.25 to 0.75	—	—	—	—	0.0030	0.0031	0.0032	0.0032	0.0033	0.0034
	16 to 30	0.751 to 1.50	—	—	—	—	0.0034	0.0035	0.0035	0.0036	0.0037	0.0038
18	5 to 15	0.28 to 0.83	—	—	—	—	—	0.0032	0.0033	0.0034	0.0035	0.0036
	16 to 30	0.831 to 1.66	—	—	—	—	—	0.0036	0.0037	0.0038	0.0038	0.0039
16	5 to 15	0.31 to 0.94	—	—	—	—	—	0.0034	0.0035	0.0036	0.0036	0.0037
	16 to 30	0.941 to 1.88	—	—	—	—	—	0.0038	0.0039	0.0039	0.0040	0.0041
14	5 to 15	0.36 to 1.07	—	—	—	—	—	—	0.0037	0.0038	0.0039	0.0040
	16 to 30	1.071 to 2.14	—	—	—	—	—	—	0.0042	0.0042	0.0043	0.0044
12	5 to 15	0.42 to 1.25	—	—	—	—	—	—	0.0040	0.0041	0.0041	0.0042
	16 to 30	1.251 to 2.50	—	—	—	—	—	—	0.0045	0.0046	0.0046	0.0047
10	5 to 15	0.50 to 1.50	—	—	—	—	—	—	—	—	0.0045	0.0046
	16 to 30	1.501 to 3.00	—	—	—	—	—	—	—	—	0.0050	0.0051
8	5 to 15	0.62 to 1.88	—	—	—	—	—	—	—	—	—	0.0051
	16 to 30	1.881 to 3.76	—	—	—	—	—	—	—	—	—	0.0057
7	5 to 15	0.71 to 2.14	—	—	—	—	—	—	—	—	—	—
	16 to 30	2.141 to 4.29	—	—	—	—	—	—	—	—	—	—
6	5 to 15	0.83 to 2.50	—	—	—	—	—	—	—	—	—	—
	16 to 30	2.501 to 5.00	—	—	—	—	—	—	—	—	—	—
4	5 to 15	1.25 to 3.75	—	—	—	—	—	—	—	—	—	—
	16 to 30	3.751 to 7.50	—	—	—	—	—	—	—	—	—	—

UNIFIED AND AMERICAN SCREW THREADS - APPENDIX G

TABLE 23 (CONTINUED) CLASS 3A, PITCH DIAMETER TOLERANCES FOR EXTERNAL THREADS OF SPECIAL DIAMETERS, PITCHES, AND LENGTHS OF ENGAGEMENT (UNS AND NS SERIES)

Basic Major (Nominal) Diameter													Threads Per Inch
1-1/4 1.1251 to 1.3750	1-1/2 1.3751 to 1.6250	1-3/4 1.6251 to 1.8750	2 1.8751 to 2.2500	2-1/2 2.2501 to 2.7500	3 2.7501 to 3.2500	3-1/2 3.2501 to 3.7500	4 3.7501 to 4.5000	5 4.5001 to 5.5000	6 5.5001 to 7.0000	8 7.0001 to 9.0000	10 9.0001 to 11.0000	12 11.0001 to 13.0000	
—	—	—	—	—									80
—	—	—	—	—									
—	—	—	—	—									72
—	—	—	—	—									
—	—	—	—	—									64
—	—	—	—	—									
—	—	—	—	—									56
—	—	—	—	—									
—	—	—	—	—									48
—	—	—	—	—									
—	—	—	—	—									40
—	—	—	—	—									
0.0028	0.0029	—	—	—	—	—	—	—	—	—	—	—	36
0.0031	0.0032	—	—	—	—	—	—	—	—	—	—	—	
0.0029	0.0030	0.0031	0.0031	0.0032	0.0033	—	—	—	—	—	—	—	32
0.0032	0.0033	0.0034	0.0034	0.0035	0.0036	—	—	—	—	—	—	—	
0.0031	0.0031	0.0032	0.0033	0.0034	0.0035	0.0036	0.0036	—	—	—	—	—	28
0.0034	0.0035	0.0035	0.0036	0.0037	0.0038	0.0039	0.0040	—	—	—	—	—	
0.0033	0.0033	0.0034	0.0035	0.0036	0.0037	0.0037	0.0038	0.0040	0.0041	—	—	—	24
0.0036	0.0037	0.0037	0.0038	0.0039	0.0040	0.0041	0.0042	0.0043	0.0044	—	—	—	
0.0035	0.0036	0.0036	0.0037	0.0038	0.0039	0.0040	0.0041	0.0042	0.0043	—	—	—	20
0.0039	0.0039	0.0040	0.0041	0.0042	0.0043	0.0044	0.0044	0.0046	0.0047	—	—	—	
0.0036	0.0037	0.0038	0.0039	0.0040	0.0041	0.0041	0.0042	0.0044	0.0045	0.0047	—	—	18
0.0040	0.0041	0.0042	0.0042	0.0044	0.0044	0.0045	0.0046	0.0047	0.0049	0.0051	—	—	
0.0038	0.0039	0.0040	0.0040	0.0041	0.0042	0.0043	0.0044	0.0045	0.0047	0.0049	0.0050	—	16
0.0042	0.0043	0.0043	0.0044	0.0045	0.0046	0.0047	0.0048	0.0049	0.0050	0.0052	0.0054	—	
0.0041	0.0041	0.0042	0.0043	0.0044	0.0045	0.0045	0.0046	0.0048	0.0049	0.0051	0.0053	0.0054	14
0.0045	0.0046	0.0046	0.0047	0.0048	0.0049	0.0050	0.0051	0.0052	0.0053	0.0055	0.0057	0.0059	
0.0043	0.0044	0.0045	0.0045	0.0046	0.0047	0.0048	0.0049	0.0050	0.0052	0.0054	0.0055	0.0057	12
0.0048	0.0049	0.0050	0.0050	0.0051	0.0052	0.0053	0.0054	0.0055	0.0056	0.0058	0.0060	0.0062	
0.0047	0.0048	0.0048	0.0049	0.0050	0.0051	0.0052	0.0053	0.0054	0.0055	0.0057	0.0059	0.0061	10
0.0052	0.0053	0.0054	0.0054	0.0055	0.0056	0.0057	0.0058	0.0059	0.0061	0.0063	0.0064	0.0066	
0.0052	0.0053	0.0054	0.0054	0.0055	0.0056	0.0057	0.0058	0.0059	0.0061	0.0063	0.0064	0.0066	8
0.0058	0.0059	0.0059	0.0060	0.0061	0.0062	0.0063	0.0064	0.0065	0.0066	0.0068	0.0070	0.0072	
0.0056	0.0056	0.0057	0.0058	0.0059	0.0060	0.0061	0.0061	0.0063	0.0064	0.0066	0.0068	0.0069	7
0.0062	0.0063	0.0063	0.0064	0.0065	0.0066	0.0067	0.0068	0.0069	0.0070	0.0072	0.0074	0.0076	
—	0.0061	0.0061	0.0062	0.0063	0.0064	0.0065	0.0066	0.0067	0.0068	0.0070	0.0072	0.0074	6
—	0.0067	0.0068	0.0069	0.0070	0.0071	0.0072	0.0072	0.0074	0.0075	0.0077	0.0079	0.0080	
—	—	—	0.0076	0.0077	0.0078	0.0079	0.0079	0.0081	0.0082	0.0084	0.0086	0.0087	4
—	—	—	0.0084	0.0085	0.0086	0.0087	0.0088	0.0089	0.0090	0.0092	0.0094	0.0096	

NOTES

1. These values do not agree with and shall not be used in place of any tabulated values for the UNC, UNF, and 8N thread series, in Table 2.
2. Formula:
   Class 3A tolerances for external threads are determined by multiplying Class 2A tolerances (computed to six decimal places) by 0.750. See Note 2, Table 22, for formula for Class 2A tolerances.
3. Length of engagement increments included in the tabulated tolerances for lengths of engagement of from 5 to 15 pitches are based on lengths of 9 pitches; those for lengths of engagement greater than 15 to 30 pitches are based on lengths of 20 pitches. For lengths of engagement not tabulated, the formula in Note 2 should be applied.
4. Pitches listed are those used most commonly and are recommended. Where intermediate pitches are specified, the formula in Note 2 should be applied.
5. Tolerances are tabulated only for combinations of diameter, pitch, and length of engagement which are considered to be generally used. For other combinations encountered, see Limitations of Design, Appendix F.

UNIFIED AND AMERICAN SCREW THREADS - APPENDIX G

TABLE 24 - CLASS 1B, PITCH DIAMETER TOLERANCES FOR INTERNAL THREADS OF SPECIAL DIAMETERS, PITCHES, AND LENGTHS OF ENGAGEMENT (UNS AND NS SERIES)

Threads Per Inch	Length of Engagement		Basic Major (Nominal) Diameter									
	Number of Pitches	Inches	1/16 0.0600 to 0.0781	3/32 0.0782 to 0.1094	1/8 0.1095 to 0.1563	3/16 0.1564 to 0.2188	1/4 0.2189 to 0.3125	3/8 0.3126 to 0.4375	1/2 0.4376 to 0.5625	5/8 0.5626 to 0.6875	3/4 0.6876 to 0.8750	1 0.8751 to 1.1250
80	5 to 15	0.06 to 0.19	—	—	—	—	—	—	—	—	—	—
	16 to 30	0.191 to 0.38	—	—	—	—	—	—	—	—	—	—
72	5 to 15	0.07 to 0.21	—	—	—	—	—	—	—	—	—	—
	16 to 30	0.211 to 0.42	—	—	—	—	—	—	—	—	—	—
64	5 to 15	0.08 to 0.23	—	—	—	—	—	—	—	—	—	—
	16 to 30	0.231 to 0.46	—	—	—	—	—	—	—	—	—	—
56	5 to 15	0.09 to 0.27	—	—	—	—	—	—	—	—	—	—
	16 to 30	0.271 to 0.54	—	—	—	—	—	—	—	—	—	—
48	5 to 15	0.10 to 0.31	—	—	—	—	—	—	—	—	—	—
	16 to 30	0.311 to 0.62	—	—	—	—	—	—	—	—	—	—
40	5 to 15	0.12 to 0.38	—	—	0.0054	0.0056	0.0057	0.0060	0.0062	0.0064	0.0065	0.0068
	16 to 30	0.381 to 0.76	—	—	0.0060	0.0062	0.0064	0.0067	0.0069	0.0071	0.0072	0.0075
36	5 to 15	0.14 to 0.42	—	—	0.0056	0.0058	0.0060	0.0063	0.0065	0.0066	0.0068	0.0071
	16 to 30	0.421 to 0.84	—	—	—	0.0065	0.0067	0.0070	0.0072	0.0074	0.0075	0.0078
32	5 to 15	0.16 to 0.47	—	—	0.0059	0.0061	0.0063	0.0066	0.0068	0.0070	0.0071	0.0074
	16 to 30	0.471 to 0.94	—	—	—	0.0069	0.0071	0.0073	0.0075	0.0077	0.0079	0.0081
28	5 to 15	0.18 to 0.54	—	—	—	0.0065	0.0067	0.0069	0.0072	0.0073	0.0075	0.0078
	16 to 30	0.541 to 1.08	—	—	—	0.0073	0.0075	0.0078	0.0080	0.0081	0.0083	0.0086
24	5 to 15	0.21 to 0.62	—	—	—	0.0070	0.0072	0.0074	0.0076	0.0078	0.0080	0.0082
	16 to 30	0.621 to 1.24	—	—	—	—	0.0080	0.0083	0.0085	0.0087	0.0088	0.0091
20	5 to 15	0.25 to 0.75	—	—	—	—	0.0078	0.0080	0.0083	0.0084	0.0086	0.0089
	16 to 30	0.751 to 1.50	—	—	—	—	0.0087	0.0090	0.0092	0.0094	0.0096	0.0098
18	5 to 15	0.28 to 0.83	—	—	—	—	—	0.0084	0.0087	0.0088	0.0090	0.0093
	16 to 30	0.831 to 1.66	—	—	—	—	—	0.0095	0.0097	0.0098	0.0100	0.0103
16	5 to 15	0.31 to 0.94	—	—	—	—	—	0.0089	0.0091	0.0093	0.0095	0.0097
	16 to 30	0.941 to 1.88	—	—	—	—	—	0.0098	0.0100	0.0102	0.0104	0.0106
14	5 to 15	0.36 to 1.07	—	—	—	—	—	—	0.0097	0.0099	0.0100	0.0103
	16 to 30	1.071 to 2.14	—	—	—	—	—	—	0.0109	0.0110	0.0112	0.0115
12	5 to 15	0.42 to 1.25	—	—	—	—	—	—	0.0104	0.0106	0.0108	0.0110
	16 to 30	1.251 to 2.50	—	—	—	—	—	—	0.0117	0.0119	0.0120	0.0123
10	5 to 15	0.50 to 1.50	—	—	—	—	—	—	—	—	0.0117	0.0120
	16 to 30	1.501 to 3.00	—	—	—	—	—	—	—	—	0.0131	0.0134
8	5 to 15	0.62 to 1.88	—	—	—	—	—	—	—	—	—	0.0133
	16 to 30	1.881 to 3.76	—	—	—	—	—	—	—	—	—	0.0149
7	5 to 15	0.71 to 2.14	—	—	—	—	—	—	—	—	—	—
	16 to 30	2.141 to 4.29	—	—	—	—	—	—	—	—	—	—
6	5 to 15	0.83 to 2.50	—	—	—	—	—	—	—	—	—	—
	16 to 30	2.501 to 5.00	—	—	—	—	—	—	—	—	—	—
4	5 to 15	1.25 to 3.75	—	—	—	—	—	—	—	—	—	—
	16 to 30	3.751 to 7.50	—	—	—	—	—	—	—	—	—	—

UNIFIED AND AMERICAN SCREW THREADS - APPENDIX G

TABLE 24 (CONTINUED) CLASS 1B, PITCH DIAMETER TOLERANCES FOR INTERNAL THREADS OF SPECIAL DIAMETERS, PITCHES, AND LENGTHS OF ENGAGEMENT (UNS AND NS SERIES)

Basic Major (Nominal) Diameter													Threads Per Inch
1-1/4 1.1251 to 1.3750	1-1/2 1.3751 to 1.6250	1-3/4 1.6251 to 1.8750	2 1.8751 to 2.2500	2-1/2 2.2501 to 2.7500	3 2.7501 to 3.2500	3-1/2 3.2501 to 3.7500	4 3.7501 to 4.5000	5 4.5001 to 5.5000	6 5.5001 to 7.0000	8 7.0001 to 9.0000	10 9.0001 to 11.0000	12 11.0001 to 13.0000	
—	—	—	—	—									80
—	—	—	—	—									
—	—	—	—	—									72
—	—	—	—	—									
—	—	—	—	—									64
—	—	—	—	—									
—	—	—	—	—									56
—	—	—	—	—									
—	—	—	—	—									48
—	—	—	—	—									
—	—	—	—	—									40
—	—	—	—	—									
0.0073	0.0075	—	—	—	—	—	—	—	—	—	—	—	36
0.0080	0.0082	—	—	—	—	—	—	—	—	—	—	—	
0.0076	0.0078	0.0080	0.0081	0.0084	0.0087	—	—	—	—	—	—	—	32
0.0084	0.0086	0.0087	0.0089	0.0092	0.0094	—	—	—	—	—	—	—	
0.0080	0.0082	0.0084	0.0085	0.0088	0.0090	0.0093	0.0095	—	—	—	—	—	28
0.0088	0.0090	0.0092	0.0093	0.0096	0.0099	0.0101	0.0103	—	—	—	—	—	
0.0085	0.0087	0.0088	0.0090	0.0093	0.0095	0.0097	0.0100	0.0103	0.0106	—	—	—	24
0.0093	0.0095	0.0097	0.0099	0.0102	0.0104	0.0106	0.0108	0.0112	0.0115	—	—	—	
0.0091	0.0093	0.0095	0.0096	0.0099	0.0101	0.0104	0.0106	0.0109	0.0112	—	—	—	20
0.0100	0.0102	0.0104	0.0106	0.0109	0.0111	0.0113	0.0115	0.0119	0.0122	—	—	—	
0.0095	0.0097	0.0099	0.0100	0.0103	0.0105	0.0108	0.0110	0.0113	0.0116	0.0122	—	—	18
0.0105	0.0107	0.0109	0.0110	0.0113	0.0116	0.0118	0.0120	0.0123	0.0127	0.0132	—	—	
0.0100	0.0101	0.0103	0.0105	0.0108	0.0110	0.0112	0.0114	0.0118	0.0121	0.0126	0.0131	—	16
0.0109	0.0111	0.0112	0.0114	0.0117	0.0119	0.0121	0.0124	0.0127	0.0130	0.0136	0.0140	—	
0.0105	0.0107	0.0109	0.0111	0.0114	0.0116	0.0118	0.0120	0.0124	0.0127	0.0132	0.0137	0.0141	14
0.0117	0.0119	0.0121	0.0122	0.0125	0.0127	0.0130	0.0132	0.0135	0.0138	0.0144	0.0148	0.0152	
0.0113	0.0115	0.0116	0.0118	0.0121	0.0123	0.0126	0.0128	0.0131	0.0134	0.0140	0.0144	0.0148	12
0.0125	0.0127	0.0129	0.0130	0.0133	0.0136	0.0138	0.0140	0.0144	0.0147	0.0152	0.0157	0.0161	
0.0122	0.0124	0.0126	0.0128	0.0130	0.0133	0.0135	0.0137	0.0141	0.0144	0.0149	0.0154	0.0158	10
0.0136	0.0138	0.0140	0.0141	0.0144	0.0147	0.0149	0.0151	0.0154	0.0158	0.0163	0.0167	0.0171	
0.0136	0.0138	0.0139	0.0141	0.0144	0.0146	0.0149	0.0151	0.0154	0.0157	0.0163	0.0167	0.0171	8
0.0151	0.0153	0.0155	0.0156	0.0159	0.0162	0.0164	0.0166	0.0169	0.0173	0.0178	0.0182	0.0186	
0.0145	0.0147	0.0148	0.0150	0.0153	0.0155	0.0158	0.0160	0.0163	0.0166	0.0172	0.0176	0.0180	7
0.0161	0.0163	0.0165	0.0166	0.0169	0.0172	0.0174	0.0176	0.0179	0.0183	0.0188	0.0192	0.0196	
—	0.0158	0.0160	0.0161	0.0164	0.0167	0.0169	0.0171	0.0174	0.0178	0.0183	0.0187	0.0191	6
—	0.0175	0.0177	0.0179	0.0182	0.0184	0.0186	0.0188	0.0192	0.0195	0.0200	0.0205	0.0209	
—	—	—	0.0197	0.0200	0.0202	0.0204	0.0206	0.0210	0.0213	0.0218	0.0223	0.0227	4
—	—	—	0.0218	0.0221	0.0224	0.0226	0.0228	0.0232	0.0235	0.0240	0.0245	0.0248	

NOTES

1. These values do not agree with and shall not be used in place of any tabulated values for the UNC, UNF, and 8N thread series, in Table 2.
2. Formula:
   Class 1B tolerances for internal threads are 1.5 times Class 2B tolerances and are determined by multiplying Class 2A tolerances (computed to six decimal places) by 1.950. See Note 2, Table 22, for formula for Class 2A tolerances.
3. Length of engagement increments included in the tabulated tolerances for lengths of engagement of from 5 to 15 pitches are based on lengths of 9 pitches; those for lengths of engagement greater than 15 to 30 pitches are based on lengths of 20 pitches. For lengths of engagement not tabulated, the formula in Note 2 should be applied.
4. Pitches listed are those used most commonly and are recommended. Where intermediate pitches are specified, the formula in Note 2 should be applied.
5. Tolerances are tabulated only for combinations of diameter, pitch, and length of engagement which are considered to be generally used. For other combinations encountered, see Limitations of Design. Appendix F.

UNIFIED AND AMERICAN SCREW THREADS - APPENDIX G

TABLE 25 - CLASS 2B, PITCH DIAMETER TOLERANCES FOR INTERNAL THREADS OF SPECIAL DIAMETERS, PITCHES, AND LENGTHS OF ENGAGEMENT (UNS AND NS SERIES)

Threads Per Inch	Length of Engagement		Basic Major (Nominal) Diameter									
	Number of Pitches	Inches	1/16 0.0600 to 0.0781	3/32 0.0782 to 0.1094	1/8 0.1095 to 0.1563	3/16 0.1564 to 0.2188	1/4 0.2189 to 0.3125	3/8 0.3126 to 0.4375	1/2 0.4376 to 0.5625	5/8 0.5626 to 0.6875	3/4 0.6876 to 0.8750	1 0.8751 to 1.1250
80	5 to 15	0.06 to 0.19	0.0025	0.0026	0.0027	0.0028	0.0029	—	—	—	—	—
	16 to 30	0.191 to 0.38	0.0028	0.0029	0.0030	0.0031	0.0033	—	—	—	—	—
72	5 to 15	0.07 to 0.21	0.0026	0.0027	0.0028	0.0029	0.0030	0.0032	—	—	—	—
	16 to 30	0.211 to 0.42	—	0.0030	0.0031	0.0033	0.0034	0.0036	—	—	—	—
64	5 to 15	0.08 to 0.23	0.0027	0.0028	0.0029	0.0031	0.0032	0.0034	0.0035	—	—	—
	16 to 30	0.231 to 0.46	—	0.0032	0.0033	0.0034	0.0035	0.0037	0.0039	—	—	—
56	5 to 15	0.09 to 0.27	—	0.0030	0.0031	0.0032	0.0033	0.0035	0.0037	0.0038	0.0039	—
	16 to 30	0.271 to 0.54	—	0.0034	0.0035	0.0036	0.0037	0.0039	0.0040	0.0042	0.0043	—
48	5 to 15	0.10 to 0.31	—	0.0032	0.0033	0.0034	0.0036	0.0037	0.0039	0.0040	0.0041	—
	16 to 30	0.311 to 0.62	—	—	0.0037	0.0039	0.0040	0.0041	0.0043	0.0044	0.0045	—
40	5 to 15	0.12 to 0.38	—	—	0.0036	0.0037	0.0038	0.0040	0.0041	0.0043	0.0044	0.0045
	16 to 30	0.381 to 0.76	—	—	0.0040	0.0042	0.0043	0.0045	0.0046	0.0047	0.0048	0.0050
36	5 to 15	0.14 to 0.42	—	—	0.0037	0.0039	0.0040	0.0042	0.0043	0.0044	0.0045	0.0047
	16 to 30	0.421 to 0.84	—	—	—	0.0044	0.0045	0.0046	0.0048	0.0049	0.0050	0.0052
32	5 to 15	0.16 to 0.47	—	—	0.0039	0.0041	0.0042	0.0044	0.0045	0.0046	0.0047	0.0049
	16 to 30	0.471 to 0.94	—	—	—	0.0046	0.0047	0.0049	0.0050	0.0051	0.0052	0.0054
28	5 to 15	0.18 to 0.54	—	—	—	0.0043	0.0044	0.0046	0.0048	0.0049	0.0050	0.0052
	16 to 30	0.541 to 1.08	—	—	—	0.0049	0.0050	0.0052	0.0053	0.0054	0.0055	0.0057
24	5 to 15	0.21 to 0.62	—	—	—	0.0047	0.0048	0.0049	0.0051	0.0052	0.0053	0.0055
	16 to 30	0.621 to 1.24	—	—	—	—	0.0054	0.0055	0.0057	0.0058	0.0059	0.0061
20	5 to 15	0.25 to 0.75	—	—	—	—	0.0052	0.0054	0.0055	0.0056	0.0057	0.0059
	16 to 30	0.751 to 1.50	—	—	—	—	0.0058	0.0060	0.0061	0.0063	0.0064	0.0065
18	5 to 15	0.28 to 0.83	—	—	—	—	—	0.0056	0.0058	0.0059	0.0060	0.0062
	16 to 30	0.831 to 1.66	—	—	—	—	—	0.0063	0.0064	0.0066	0.0067	0.0068
16	5 to 15	0.31 to 0.94	—	—	—	—	—	0.0059	0.0061	0.0062	0.0063	0.0065
	16 to 30	0.941 to 1.88	—	—	—	—	—	0.0065	0.0067	0.0068	0.0069	0.0071
14	5 to 15	0.36 to 1.07	—	—	—	—	—	—	0.0065	0.0066	0.0067	0.0069
	16 to 30	1.071 to 2.14	—	—	—	—	—	—	0.0072	0.0074	0.0075	0.0076
12	5 to 15	0.42 to 1.25	—	—	—	—	—	—	0.0070	0.0071	0.0072	0.0074
	16 to 30	1.251 to 2.50	—	—	—	—	—	—	0.0078	0.0079	0.0080	0.0082
10	5 to 15	0.50 to 1.50	—	—	—	—	—	—	—	—	0.0078	0.0080
	16 to 30	1.501 to 3.00	—	—	—	—	—	—	—	—	0.0087	0.0089
8	5 to 15	0.62 to 1.88	—	—	—	—	—	—	—	—	—	0.0089
	16 to 30	1.881 to 3.76	—	—	—	—	—	—	—	—	—	0.0099
7	5 to 15	0.71 to 2.14	—	—	—	—	—	—	—	—	—	—
	16 to 30	2.141 to 4.29	—	—	—	—	—	—	—	—	—	—
6	5 to 15	0.83 to 2.50	—	—	—	—	—	—	—	—	—	—
	16 to 30	2.501 to 5.00	—	—	—	—	—	—	—	—	—	—
4	5 to 15	1.25 to 3.75	—	—	—	—	—	—	—	—	—	—
	16 to 30	3.751 to 7.50	—	—	—	—	—	—	—	—	—	—

UNIFIED AND AMERICAN SCREW THREADS - APPENDIX G

TABLE 25 (CONTINUED) CLASS 2B, PITCH DIAMETER TOLERANCES FOR INTERNAL THREADS OF SPECIAL DIAMETERS, PITCHES, AND LENGTHS OF ENGAGEMENT (UNS AND NS SERIES)

Basic Major (Nominal) Diameter													Threads Per Inch
1-1/4 1.1251 to 1.3750	1-1/2 1.3751 to 1.6250	1-3/4 1.6251 to 1.8750	2 1.8751 to 2.2500	2-1/2 2.2501 to 2.7500	3 2.7501 to 3.2500	3-1/2 3.2501 to 3.7500	4 3.7501 to 4.5000	5 4.5001 to 5.5000	6 5.5001 to 7.0000	8 7.0001 to 9.0000	10 9.0001 to 11.0000	12 11.0001 to 13.0000	
—	—	—	—	—									80
—	—	—	—	—									
—	—	—	—	—									72
—	—	—	—	—									
—	—	—	—	—									64
—	—	—	—	—									
—	—	—	—	—									56
—	—	—	—	—									
—	—	—	—	—									48
—	—	—	—	—									
—	—	—	—	—									40
—	—	—	—	—									
0.0049	0.0050	—	—	—	—	—	—	—	—	—	—	—	36
0.0053	0.0055	—	—	—	—	—	—	—	—	—	—	—	
0.0051	0.0052	0.0053	0.0054	0.0056	0.0058	—	—	—	—	—	—	—	32
0.0056	0.0057	0.0058	0.0059	0.0061	0.0063	—	—	—	—	—	—	—	
0.0053	0.0055	0.0056	0.0057	0.0059	0.0060	0.0062	0.0063	—	—	—	—	—	28
0.0059	0.0060	0.0061	0.0062	0.0064	0.0066	0.0067	0.0069	—	—	—	—	—	
0.0056	0.0058	0.0059	0.0060	0.0062	0.0064	0.0065	0.0066	0.0069	0.0071	—	—	—	24
0.0062	0.0064	0.0065	0.0066	0.0068	0.0069	0.0071	0.0072	0.0075	0.0077	—	—	—	
0.0061	0.0062	0.0063	0.0064	0.0066	0.0068	0.0069	0.0070	0.0073	0.0075	—	—	—	20
0.0067	0.0068	0.0069	0.0071	0.0072	0.0074	0.0076	0.0077	0.0079	0.0081	—	—	—	
0.0063	0.0065	0.0066	0.0067	0.0069	0.0070	0.0072	0.0073	0.0076	0.0078	0.0081	—	—	18
0.0070	0.0071	0.0072	0.0074	0.0075	0.0077	0.0079	0.0080	0.0082	0.0084	0.0088	—	—	
0.0066	0.0068	0.0069	0.0070	0.0072	0.0073	0.0075	0.0076	0.0079	0.0081	0.0084	0.0087	—	16
0.0072	0.0074	0.0075	0.0076	0.0078	0.0080	0.0081	0.0082	0.0085	0.0087	0.0090	0.0093	—	
0.0070	0.0072	0.0073	0.0074	0.0076	0.0077	0.0079	0.0080	0.0083	0.0085	0.0088	0.0091	0.0094	14
0.0078	0.0079	0.0080	0.0081	0.0083	0.0085	0.0086	0.0088	0.0090	0.0092	0.0096	0.0099	0.0102	
0.0075	0.0076	0.0078	0.0079	0.0081	0.0082	0.0084	0.0085	0.0087	0.0090	0.0093	0.0096	0.0099	12
0.0083	0.0085	0.0086	0.0087	0.0089	0.0090	0.0092	0.0093	0.0096	0.0098	0.0101	0.0104	0.0107	
0.0082	0.0083	0.0084	0.0085	0.0087	0.0089	0.0090	0.0091	0.0094	0.0096	0.0100	0.0103	0.0105	10
0.0091	0.0092	0.0093	0.0094	0.0096	0.0098	0.0099	0.0101	0.0103	0.0105	0.0109	0.0112	0.0114	
0.0090	0.0092	0.0093	0.0094	0.0096	0.0098	0.0099	0.0100	0.0103	0.0105	0.0108	0.0111	0.0114	8
0.0101	0.0102	0.0103	0.0104	0.0106	0.0108	0.0109	0.0111	0.0113	0.0115	0.0119	0.0122	0.0124	
0.0096	0.0098	0.0099	0.0100	0.0102	0.0104	0.0105	0.0106	0.0109	0.0111	0.0114	0.0117	0.0120	7
0.0107	0.0109	0.0110	0.0111	0.0113	0.0114	0.0116	0.0117	0.0120	0.0122	0.0125	0.0128	0.0131	
—	0.0105	0.0106	0.0108	0.0109	0.0111	0.0113	0.0114	0.0116	0.0118	0.0122	0.0125	0.0128	6
—	0.0117	0.0118	0.0119	0.0121	0.0123	0.0124	0.0126	0.0128	0.0130	0.0134	0.0137	0.0139	
—	—	—	0.0131	0.0133	0.0135	0.0136	0.0138	0.0140	0.0142	0.0146	0.0149	0.0151	4
—	—	—	0.0146	0.0147	0.0149	0.0151	0.0152	0.0154	0.0156	0.0160	0.0163	0.0166	

NOTES

1. These values do not agree with and shall not be used in place of any tabulated values for the UNC, UNF, and 8N thread series, in Table 2.
2. Formula:
   Class 2B tolerances are determined by multiplying Class 2A tolerances (computed to six decimal places) by 1.300. See Note 2, Table 22, for formula for Class 2A tolerances.
3. Length of engagement increments included in the tabulated tolerances for lengths of engagement of from 5 to 15 pitches are based on lengths of 9 pitches; those for lengths of engagement greater than 15 to 30 pitches are based on lengths of 20 pitches. For lengths of engagement not tabulated, the formula in Note 2 should be applied.
4. Pitches listed are those used most commonly and are recommended. Where intermediate pitches are specified, the formula in Note 2 should be applied.
5. Tolerances are tabulated only for combinations of diameter, pitch, and length of engagement which are considered to be generally used. For other combinations encountered, see Limitations of Design, Appendix F.

UNIFIED AND AMERICAN SCREW THREADS - APPENDIX G

TABLE 26 - CLASS 3B, PITCH DIAMETER TOLERANCES FOR INTERNAL THREADS OF SPECIAL DIAMETERS, PITCHES, AND LENGTHS OF ENGAGEMENT (UNS AND NS SERIES)

Threads Per Inch	Length of Engagement		Basic Major (Nominal) Diameter									
	Number of Pitches	Inches	1/16 0.0600 to 0.0781	3/32 0.0782 to 0.1094	1/8 0.1095 to 0.1563	3/16 0.1564 to 0.2188	1/4 0.2189 to 0.3125	3/8 0.3126 to 0.4375	1/2 0.4376 to 0.5625	5/8 0.5626 to 0.6875	3/4 0.6876 to 0.8750	1 0.8751 to 1.1250
80	5 to 15	0.06 to 0.19	0.0019	0.0019	0.0020	0.0021	0.0022	—	—	—	—	—
	16 to 30	0.191 to 0.38	0.0021	0.0022	0.0023	0.0024	0.0024	—	—	—	—	—
72	5 to 15	0.07 to 0.21	0.0019	0.0020	0.0021	0.0022	0.0023	0.0024	—	—	—	—
	16 to 30	0.211 to 0.42	—	0.0023	0.0023	0.0025	0.0025	0.0027	—	—	—	—
64	5 to 15	0.08 to 0.23	0.0020	0.0021	0.0022	0.0023	0.0024	0.0025	0.0026	—	—	—
	16 to 30	0.231 to 0.46	—	0.0024	0.0025	0.0026	0.0027	0.0028	0.0029	—	—	—
56	5 to 15	0.09 to 0.27	—	0.0023	0.0023	0.0024	0.0025	0.0026	0.0027	0.0028	0.0029	—
	16 to 30	0.271 to 0.54	—	0.0025	0.0026	0.0027	0.0028	0.0029	0.0030	0.0031	0.0032	—
48	5 to 15	0.10 to 0.31	—	0.0024	0.0025	0.0026	0.0027	0.0028	0.0029	0.0030	0.0031	—
	16 to 30	0.311 to 0.62	—	—	0.0028	0.0029	0.0030	0.0031	0.0032	0.0033	0.0034	—
40	5 to 15	0.12 to 0.38	—	—	0.0027	0.0028	0.0029	0.0030	0.0031	0.0032	0.0033	0.0034
	16 to 30	0.381 to 0.76	—	—	0.0030	0.0031	0.0032	0.0033	0.0034	0.0035	0.0036	0.0037
36	5 to 15	0.14 to 0.42	—	—	0.0028	0.0029	0.0030	0.0031	0.0032	0.0033	0.0034	0.0035
	16 to 30	0.421 to 0.84	—	—	—	0.0033	0.0034	0.0035	0.0036	0.0037	0.0038	0.0039
32	5 to 15	0.16 to 0.47	—	—	0.0030	0.0031	0.0031	0.0033	0.0034	0.0035	0.0036	0.0037
	16 to 30	0.471 to 0.94	—	—	—	0.0034	0.0035	0.0037	0.0038	0.0039	0.0039	0.0041
28	5 to 15	0.18 to 0.54	—	—	—	0.0033	0.0033	0.0035	0.0036	0.0037	0.0037	0.0039
	16 to 30	0.541 to 1.08	—	—	—	0.0037	0.0037	0.0039	0.0040	0.0041	0.0042	0.0043
24	5 to 15	0.21 to 0.62	—	—	—	0.0035	0.0036	0.0037	0.0038	0.0039	0.0040	0.0041
	16 to 30	0.621 to 1.24	—	—	—	—	0.0040	0.0041	0.0043	0.0043	0.0044	0.0046
20	5 to 15	0.25 to 0.75	—	—	—	—	0.0039	0.0040	0.0041	0.0042	0.0043	0.0044
	16 to 30	0.751 to 1.50	—	—	—	—	0.0044	0.0045	0.0046	0.0047	0.0048	0.0049
18	5 to 15	0.28 to 0.83	—	—	—	—	—	0.0042	0.0043	0.0044	0.0045	0.0046
	16 to 30	0.831 to 1.66	—	—	—	—	—	0.0047	0.0048	0.0049	0.0050	0.0051
16	5 to 15	0.31 to 0.94	—	—	—	—	—	0.0045	0.0046	0.0046	0.0047	0.0049
	16 to 30	0.941 to 1.88	—	—	—	—	—	0.0049	0.0050	0.0051	0.0052	0.0053
14	5 to 15	0.36 to 1.07	—	—	—	—	—	—	0.0049	0.0049	0.0050	0.0052
	16 to 30	1.071 to 2.14	—	—	—	—	—	—	0.0054	0.0055	0.0056	0.0057
12	5 to 15	0.42 to 1.25	—	—	—	—	—	—	0.0052	0.0053	0.0054	0.0055
	16 to 30	1.251 to 2.50	—	—	—	—	—	—	0.0058	0.0059	0.0060	0.0061
10	5 to 15	0.50 to 1.50	—	—	—	—	—	—	—	—	0.0059	0.0060
	16 to 30	1.501 to 3.00	—	—	—	—	—	—	—	—	0.0065	0.0067
8	5 to 15	0.62 to 1.88	—	—	—	—	—	—	—	—	—	0.0067
	16 to 30	1.881 to 3.76	—	—	—	—	—	—	—	—	—	0.0074
7	5 to 15	0.71 to 2.14	—	—	—	—	—	—	—	—	—	—
	16 to 30	2.141 to 4.29	—	—	—	—	—	—	—	—	—	—
6	5 to 15	0.83 to 2.50	—	—	—	—	—	—	—	—	—	—
	16 to 30	2.501 to 5.00	—	—	—	—	—	—	—	—	—	—
4	5 to 15	1.25 to 3.75	—	—	—	—	—	—	—	—	—	—
	16 to 30	3.751 to 7.50	—	—	—	—	—	—	—	—	—	—

UNIFIED AND AMERICAN SCREW THREADS - APPENDIX G

TABLE 26 (CONTINUED) CLASS 3B, PITCH DIAMETER TOLERANCES FOR INTERNAL THREADS OF SPECIAL DIAMETERS, PITCHES, AND LENGTHS OF ENGAGEMENT (UNS AND NS SERIES)

Basic Major (Nominal) Diameter													Threads Per Inch
1-1/4 1.1251 to 1.3750	1-1/2 1.3751 to 1.6250	1-3/4 1.6251 to 1.8750	2 1.8751 to 2.2500	2-1/2 2.2501 to 2.7500	3 2.7501 to 3.2500	3-1/2 3.2501 to 3.7500	4 3.7501 to 4.5000	5 4.5001 to 5.5000	6 5.5001 to 7.0000	8 7.0001 to 9.0000	10 9.0001 to 11.0000	12 11.0001 to 13.0000	
—	—	—	—	—									80
—	—	—	—	—									
—	—	—	—	—									72
—	—	—	—	—									
—	—	—	—	—									64
—	—	—	—	—									
—	—	—	—	—									56
—	—	—	—	—									
—	—	—	—	—									48
—	—	—	—	—									
—	—	—	—	—									40
—	—	—	—	—									
0.0036	0.0037	—	—	—	—	—	—	—	—	—	—	—	36
0.0040	0.0041	—	—	—	—	—	—	—	—	—	—	—	
0.0038	0.0039	0.0040	0.0041	0.0042	0.0043	—	—	—	—	—	—	—	32
0.0042	0.0043	0.0044	0.0044	0.0046	0.0047	—	—	—	—	—	—	—	
0.0040	0.0041	0.0042	0.0043	0.0044	0.0045	0.0046	0.0047	—	—	—	—	—	28
0.0044	0.0045	0.0046	0.0047	0.0048	0.0049	0.0050	0.0051	—	—	—	—	—	
0.0042	0.0043	0.0044	0.0045	0.0046	0.0048	0.0049	0.0050	0.0052	0.0053	—	—	—	24
0.0047	0.0048	0.0049	0.0049	0.0051	0.0052	0.0053	0.0054	0.0056	0.0058	—	—	—	
0.0045	0.0046	0.0047	0.0048	0.0050	0.0051	0.0052	0.0053	0.0055	0.0056	—	—	—	20
0.0050	0.0051	0.0052	0.0053	0.0054	0.0056	0.0057	0.0058	0.0059	0.0061	—	—	—	
0.0047	0.0048	0.0049	0.0050	0.0051	0.0053	0.0054	0.0055	0.0057	0.0058	0.0061	—	—	18
0.0052	0.0053	0.0054	0.0055	0.0057	0.0058	0.0059	0.0060	0.0062	0.0063	0.0066	—	—	
0.0050	0.0051	0.0052	0.0052	0.0054	0.0055	0.0056	0.0057	0.0059	0.0061	0.0063	0.0066	—	16
0.0054	0.0055	0.0056	0.0057	0.0058	0.0060	0.0061	0.0062	0.0064	0.0065	0.0068	0.0070	—	
0.0053	0.0054	0.0055	0.0055	0.0057	0.0058	0.0059	0.0060	0.0062	0.0063	0.0066	0.0068	0.0070	14
0.0058	0.0059	0.0060	0.0061	0.0063	0.0064	0.0065	0.0066	0.0068	0.0069	0.0072	0.0074	0.0076	
0.0056	0.0057	0.0058	0.0059	0.0060	0.0062	0.0063	0.0064	0.0066	0.0067	0.0070	0.0072	0.0074	12
0.0063	0.0064	0.0064	0.0065	0.0067	0.0068	0.0069	0.0070	0.0072	0.0073	0.0076	0.0078	0.0080	
0.0061	0.0062	0.0063	0.0064	0.0065	0.0066	0.0068	0.0069	0.0070	0.0072	0.0075	0.0077	0.0079	10
0.0068	0.0069	0.0070	0.0071	0.0072	0.0073	0.0074	0.0075	0.0077	0.0079	0.0081	0.0084	0.0086	
0.0068	0.0069	0.0070	0.0071	0.0072	0.0073	0.0074	0.0075	0.0077	0.0079	0.0081	0.0084	0.0086	8
0.0075	0.0076	0.0077	0.0078	0.0080	0.0081	0.0082	0.0083	0.0085	0.0086	0.0089	0.0091	0.0093	
0.0072	0.0073	0.0074	0.0075	0.0076	0.0078	0.0079	0.0080	0.0082	0.0083	0.0086	0.0088	0.0090	7
0.0080	0.0081	0.0082	0.0083	0.0085	0.0086	0.0087	0.0088	0.0090	0.0091	0.0094	0.0096	0.0098	
—	0.0079	0.0080	0.0081	0.0082	0.0083	0.0084	0.0085	0.0087	0.0089	0.0091	0.0094	0.0096	6
—	0.0088	0.0089	0.0089	0.0091	0.0092	0.0093	0.0094	0.0096	0.0098	0.0100	0.0103	0.0104	
—	—	—	0.0098	0.0100	0.0101	0.0102	0.0103	0.0105	0.0107	0.0109	0.0111	0.0113	4
—	—	—	0.0109	0.0111	0.0112	0.0113	0.0114	0.0116	0.0117	0.0120	0.0122	0.0124	

NOTES

1. These values do not agree with and shall not be used in place of any tabulated values for the UNC, UNF and 8N thread series, in Table 2.
2. Formula:
   Class 3B tolerances for internal threads are 0.75 times Class 2B tolerances and are determined by multiplying Class 2A tolerances (computed to six decimal places) by 0.975. See Note 2, Table 22, for formula for Class 2A tolerances.
3. Length of engagement increments included in the tabulated tolerances for lengths of engagement of from 5 to 15 pitches are based on lengths of 9 pitches; those for lengths of engagement greater than 15 to 30 pitches are based on lengths of 20 pitches. For lengths of engagement not tabulated, the formula in Note 2 should be applied.
4. Pitches listed are those used most commonly and are recommended. Where intermediate pitches are specified, the formula in Note 2 should be applied.
5. Tolerances are tabulated only for combinations of diameter, pitch, and length of engagement which are considered to be generally used. For other combinations encountered, see Limitations of Design, Appendix F.

UNIFIED AND AMERICAN SCREW THREADS - APPENDIX G

TABLE 27 - CLASS 2, PITCH DIAMETER TOLERANCES FOR THREADS OF SPECIAL DIAMETERS, PITCHES, AND LENGTHS OF ENGAGEMENT (NS SERIES)

Threads Per Inch	Length of Engagement		Basic Major (Nominal) Diameter									
	Number of Pitches	Inches	1/16 0.0600 to 0.0781	3/32 0.0782 to 0.1094	1/8 0.1095 to 0.1563	3/16 0.1564 to 0.2188	1/4 0.2189 to 0.3125	3/8 0.3126 to 0.4375	1/2 0.4376 to 0.5625	5/8 0.5626 to 0.6875	3/4 0.6876 to 0.8750	1 0.8751 to 1.1250
80	5 to 15	0.06 to 0.19	0.0018	0.0019	0.0020	0.0021	0.0023	—	—	—	—	—
	16 to 30	0.191 to 0.38	0.0020	0.0021	0.0022	0.0023	0.0024	—	—	—	—	—
72	5 to 15	0.07 to 0.21	0.0018	0.0020	0.0021	0.0022	0.0023	0.0026	—	—	—	—
	16 to 30	0.211 to 0.42	0.0020	0.0022	0.0023	0.0024	0.0025	0.0028	—	—	—	—
64	5 to 15	0.08 to 0.23	0.0019	0.0021	0.0021	0.0023	0.0024	0.0027	0.0029	—	—	—
	16 to 30	0.231 to 0.46	0.0022	0.0023	0.0024	0.0025	0.0027	0.0029	0.0031	—	—	—
56	5 to 15	0.09 to 0.27	0.0020	0.0022	0.0023	0.0024	0.0026	0.0028	0.0030	0.0031	0.0033	—
	16 to 30	0.271 to 0.54	0.0023	0.0024	0.0025	0.0027	0.0028	0.0030	0.0032	0.0034	0.0035	—
48	5 to 15	0.10 to 0.31	—	0.0023	0.0024	0.0026	0.0027	0.0029	0.0031	0.0033	0.0034	—
	16 to 30	0.311 to 0.62	—	0.0026	0.0027	0.0029	0.0030	0.0033	0.0034	0.0036	0.0037	—
40	5 to 15	0.12 to 0.38	—	—	0.0026	0.0027	0.0029	0.0031	0.0033	0.0035	0.0036	0.0039
	16 to 30	0.381 to 0.76	—	—	0.0030	0.0031	0.0032	0.0035	0.0037	0.0038	0.0040	0.0042
36	5 to 15	0.14 to 0.42	—	—	0.0027	0.0029	0.0030	0.0032	0.0034	0.0036	0.0037	0.0040
	16 to 30	0.421 to 0.84	—	—	0.0031	0.0033	0.0034	0.0036	0.0038	0.0040	0.0041	0.0044
32	5 to 15	0.16 to 0.47	—	—	0.0028	0.0030	0.0031	0.0034	0.0036	0.0037	0.0039	0.0041
	16 to 30	0.471 to 0.94	—	—	0.0033	0.0035	0.0036	0.0038	0.0040	0.0042	0.0043	0.0046
28	5 to 15	0.18 to 0.54	—	—	—	0.0032	0.0033	0.0035	0.0037	0.0039	0.0040	0.0043
	16 to 30	0.541 to 1.08	—	—	—	0.0037	0.0038	0.0041	0.0043	0.0044	0.0046	0.0048
24	5 to 15	0.21 to 0.62	—	—	—	0.0034	0.0035	0.0038	0.0040	0.0041	0.0043	0.0045
	16 to 30	0.621 to 1.24	—	—	—	0.0040	0.0041	0.0044	0.0046	0.0047	0.0049	0.0051
20	5 to 15	0.25 to 0.75	—	—	—	—	0.0038	0.0041	0.0042	0.0044	0.0046	0.0048
	16 to 30	0.751 to 1.50	—	—	—	—	0.0046	0.0048	0.0050	0.0051	0.0053	0.0056
18	5 to 15	0.28 to 0.83	—	—	—	—	—	0.0042	0.0044	0.0046	0.0048	0.0050
	16 to 30	0.831 to 1.66	—	—	—	—	—	0.0051	0.0052	0.0054	0.0056	0.0058
16	5 to 15	0.31 to 0.94	—	—	—	—	—	0.0045	0.0047	0.0048	0.0050	0.0052
	16 to 30	0.941 to 1.88	—	—	—	—	—	0.0054	0.0056	0.0057	0.0059	0.0062
14	5 to 15	0.36 to 1.07	—	—	—	—	—	—	0.0049	0.0051	0.0053	0.0055
	16 to 30	1.071 to 2.14	—	—	—	—	—	—	0.0060	0.0062	0.0063	0.0066
12	5 to 15	0.42 to 1.25	—	—	—	—	—	—	0.0053	0.0055	0.0056	0.0059
	16 to 30	1.251 to 2.50	—	—	—	—	—	—	0.0065	0.0067	0.0068	0.0071
10	5 to 15	0.50 to 1.50	—	—	—	—	—	—	—	—	0.0061	0.0064
	16 to 30	1.501 to 3.00	—	—	—	—	—	—	—	—	0.0076	0.0078
8	5 to 15	0.62 to 1.88	—	—	—	—	—	—	—	—	—	0.0070
	16 to 30	1.881 to 3.76	—	—	—	—	—	—	—	—	—	0.0089
7	5 to 15	0.71 to 2.14	—	—	—	—	—	—	—	—	—	—
	16 to 30	2.141 to 4.29	—	—	—	—	—	—	—	—	—	—
6	5 to 15	0.83 to 2.50	—	—	—	—	—	—	—	—	—	—
	16 to 30	2.501 to 5.00	—	—	—	—	—	—	—	—	—	—
4	5 to 15	1.25 to 3.75	—	—	—	—	—	—	—	—	—	—
	16 to 30	3.751 to 7.50	—	—	—	—	—	—	—	—	—	—

UNIFIED AND AMERICAN SCREW THREADS - APPENDIX G

TABLE 27 (CONTINUED) CLASS 2, PITCH DIAMETER TOLERANCES FOR THREADS OF SPECIAL DIAMETERS, PITCHES, AND LENGTHS OF ENGAGEMENT (NS SERIES)

Basic Major (Nominal) Diameter													Threads Per Inch
1-1/4 1.1251 to 1.3750	1-1/2 1.3751 to 1.6250	1-3/4 1.6251 to 1.8750	2 1.8751 to 2.2500	2-1/2 2.2501 to 2.7500	3 2.7501 to 3.2500	3-1/2 3.2501 to 3.7500	4 3.7501 to 4.5000	5 4.5001 to 5.5000	6 5.5001 to 7.0000	8 7.0001 to 9.0000	10 9.0001 to 11.0000	12 11.0001 to 13.0000	
—	—	—	—	—									80
—	—	—	—	—									
—	—	—	—	—									72
—	—	—	—	—									
—	—	—	—	—									64
—	—	—	—	—									
—	—	—	—	—									56
—	—	—	—	—									
—	—	—	—	—									48
—	—	—	—	—									
—	—	—	—	—									40
—	—	—	—	—									
0.0042	0.0044	—	—	—									
0.0046	0.0049	—	—	—	—	—	—	—	—	—	—	—	36
0.0044	0.0046	0.0048	0.0050	0.0053	0.0056	—	—	—	—	—	—	—	32
0.0048	0.0050	0.0052	0.0054	0.0058	0.0061	—	—	—	—	—	—	—	
0.0046	0.0048	0.0050	0.0051	0.0055	0.0058	0.0061	0.0063	—	—	—	—	—	28
0.0051	0.0053	0.0055	0.0057	0.0060	0.0063	0.0066	0.0068	—	—	—	—	—	
0.0048	0.0050	0.0052	0.0054	0.0057	0.0060	0.0063	0.0065	0.0070	0.0074	—	—	—	24
0.0054	0.0056	0.0058	0.0060	0.0063	0.0066	0.0069	0.0071	0.0076	0.0080	—	—	—	
0.0051	0.0053	0.0055	0.0057	0.0060	0.0063	0.0066	0.0068	0.0073	0.0077	—	—	—	20
0.0058	0.0060	0.0062	0.0064	0.0067	0.0070	0.0073	0.0076	0.0080	0.0085	—	—	—	
0.0053	0.0055	0.0057	0.0058	0.0062	0.0065	0.0068	0.0070	0.0075	0.0079	0.0087	—	—	18
0.0061	0.0063	0.0065	0.0067	0.0070	0.0073	0.0076	0.0078	0.0083	0.0087	0.0095	—	—	
0.0055	0.0057	0.0059	0.0061	0.0064	0.0067	0.0070	0.0072	0.0077	0.0081	0.0089	0.0096	—	16
0.0064	0.0066	0.0068	0.0070	0.0073	0.0076	0.0079	0.0082	0.0086	0.0091	0.0098	0.0105	—	
0.0058	0.0060	0.0062	0.0064	0.0067	0.0070	0.0073	0.0075	0.0080	0.0084	0.0092	0.0099	0.0105	14
0.0068	0.0070	0.0072	0.0074	0.0077	0.0080	0.0083	0.0086	0.0090	0.0095	0.0102	0.0109	0.0115	
0.0061	0.0063	0.0065	0.0067	0.0070	0.0073	0.0076	0.0079	0.0084	0.0088	0.0095	0.0102	0.0108	12
0.0073	0.0076	0.0078	0.0079	0.0083	0.0086	0.0088	0.0091	0.0096	0.0100	0.0108	0.0114	0.0120	
0.0066	0.0068	0.0070	0.0072	0.0075	0.0078	0.0081	0.0084	0.0088	0.0093	0.0100	0.0107	0.0113	10
0.0081	0.0083	0.0085	0.0086	0.0090	0.0093	0.0096	0.0098	0.0103	0.0107	0.0115	0.0121	0.0128	
0.0073	0.0075	0.0077	0.0079	0.0082	0.0085	0.0088	0.0090	0.0095	0.0099	0.0107	0.0114	0.0120	8
0.0091	0.0093	0.0095	0.0097	0.0100	0.0103	0.0106	0.0109	0.0113	0.0118	0.0125	0.0132	0.0138	
0.0077	0.0079	0.0081	0.0083	0.0087	0.0090	0.0092	0.0095	0.0100	0.0104	0.0111	0.0118	0.0124	7
0.0098	0.0100	0.0102	0.0104	0.0107	0.0110	0.0113	0.0116	0.0121	0.0125	0.0132	0.0139	0.0145	
—	0.0085	0.0087	0.0089	0.0092	0.0095	0.0098	0.0101	0.0105	0.0110	0.0117	0.0124	0.0130	6
—	0.0110	0.0112	0.0113	0.0117	0.0120	0.0123	0.0125	0.0130	0.0134	0.0142	0.0148	0.0154	
—	—	—	0.0108	0.0112	0.0115	0.0117	0.0120	0.0125	0.0129	0.0136	0.0143	0.0149	4
—	—	—	0.0145	0.0148	0.0151	0.0154	0.0156	0.0161	0.0165	0.0173	0.0180	0.0186	

NOTES

1. These values do not agree with and shall not be used in place of any tabulated values for the NC, NF, 8N, 12N, 16N, and NEF thread series, in Tables 2 and 3.
2. Formula:
   Class 2 tolerances $= 0.002\sqrt{D} + 0.00133L_e + 0.010\sqrt{p}$
   Where: D = basic major diameter
   L_e = length of engagement
   p = pitch
3. Length of engagement increments included in the tabulated tolerances for lengths of engagement of from 5 to 15 pitches are based on lengths of 9 pitches; those for lengths of engagement greater than 15 to 30 pitches are based on lengths of 20 pitches. For lengths of engagement not tabulated, the formula in Note 2 should be applied.
4. Pitches listed are those used most commonly and are recommended. Where intermediate pitches are specified, the formula in Note 2 should be applied.
5. Tolerances are tabulated only for combinations of diameter, pitch, and length of engagement which are considered to be generally used. For other combinations encountered, see Limitations of Design, Appendix F.

UNIFIED AND AMERICAN SCREW THREADS - APPENDIX G

TABLE 28 - CLASS 3, PITCH DIAMETER TOLERANCES FOR THREADS OF SPECIAL DIAMETERS, PITCHES, AND LENGTHS OF ENGAGEMENT (NS SERIES)

Threads Per Inch	Length of Engagement		Basic Major (Nominal) Diameter									
	Number of Pitches	Inches	1/16 0.0600 to 0.0781	3/32 0.0782 to 0.1094	1/8 0.1095 to 0.1563	3/16 0.1564 to 0.2188	1/4 0.2189 to 0.3125	3/8 0.3126 to 0.4375	1/2 0.4376 to 0.5625	5/8 0.5626 to 0.6875	3/4 0.6876 to 0.8750	1 0.8751 to 1.1250
80	5 to 15	0.06 to 0.19	0.0012	0.0013	0.0014	0.0015	0.0016	—	—	—	—	—
	16 to 30	0.191 to 0.38	0.0014	0.0014	0.0015	0.0016	0.0017	—	—	—	—	—
72	5 to 15	0.07 to 0.21	0.0013	0.0014	0.0014	0.0015	0.0016	0.0018	—	—	—	—
	16 to 30	0.211 to 0.42	0.0014	0.0015	0.0016	0.0017	0.0018	0.0019	—	—	—	—
64	5 to 15	0.08 to 0.23	0.0014	0.0014	0.0015	0.0016	0.0017	0.0019	0.0020	—	—	—
	16 to 30	0.231 to 0.46	0.0015	0.0016	0.0017	0.0018	0.0019	0.0020	0.0022	—	—	—
56	5 to 15	0.09 to 0.27	0.0014	0.0015	0.0016	0.0017	0.0018	0.0019	0.0021	0.0022	0.0023	—
	16 to 30	0.271 to 0.54	0.0016	0.0017	0.0018	0.0019	0.0020	0.0021	0.0023	0.0024	0.0025	—
48	5 to 15	0.10 to 0.31	—	0.0016	0.0017	0.0018	0.0019	0.0020	0.0022	0.0023	0.0024	—
	16 to 30	0.311 to 0.62	—	0.0018	0.0019	0.0020	0.0021	0.0023	0.0024	0.0025	0.0026	—
40	5 to 15	0.12 to 0.38	—	—	0.0018	0.0019	0.0020	0.0022	0.0023	0.0024	0.0025	0.0027
	16 to 30	0.381 to 0.76	—	—	0.0021	0.0022	0.0023	0.0024	0.0026	0.0027	0.0028	0.0030
36	5 to 15	0.14 to 0.42	—	—	0.0019	0.0020	0.0021	0.0023	0.0024	0 0025	0.0026	0.0028
	16 to 30	0.421 to 0.84	—	—	0.0022	0.0023	0.0024	0.0025	0.0027	0.0028	0.0029	0.0031
32	5 to 15	0.16 to 0.47	—	—	0.0020	0.0021	0.0022	0.0024	0.0025	0.0026	0.0027	0.0029
	16 to 30	0.471 to 0.94	—	—	0.0023	0.0024	0.0025	0.0027	0.0028	0.0029	0.0030	0.0032
28	5 to 15	0.18 to 0.54	—	—	—	0.0022	0.0023	0.0025	0.0026	0.0027	0.0028	0.0030
	16 to 30	0.541 to 1.08	—	—	—	0.0026	0.0027	0.0028	0.0030	0.0031	0.0032	0.0034
24	5 to 15	0.21 to 0.62	—	—	—	0.0024	0.0025	0.0026	0.0028	0.0029	0.0030	0.0032
	16 to 30	0.621 to 1.24	—	—	—	0.0028	0.0029	0.0031	0.0032	0.0033	0.0034	0.0036
20	5 to 15	0.25 to 0.75	—	—	—	—	0.0027	0.0028	0.0030	0.0031	0.0032	0.0034
	16 to 30	0.751 to 1.50	—	—	—	—	0.0032	0.0034	0.0035	0.0036	0.0037	0.0039
18	5 to 15	0.28 to 0.83	—	—	—	—	—	0.0030	0.0031	0.0032	0.0033	0.0035
	16 to 30	0.831 to 1.66	—	—	—	—	—	0.0035	0.0037	0.0038	0.0039	0.0041
16	5 to 15	0.31 to 0.94	—	—	—	—	—	0.0031	0.0033	0.0034	0.0035	0.0037
	16 to 30	0.941 to 1.88	—	—	—	—	—	0.0038	0.0039	0.0040	0.0041	0.0043
14	5 to 15	0.36 to 1.07	—	—	—	—	—	—	0.0035	0.0036	0.0037	0.0039
	16 to 30	1.071 to 2.14	—	—	—	—	—	—	0.0042	0.0043	0.0044	0.0046
12	5 to 15	0.42 to 1.25	—	—	—	—	—	—	0.0037	0.0038	0.0039	0.0041
	16 to 30	1.251 to 2.50	—	—	—	—	—	—	0.0046	0.0047	0.0048	0.0050
10	5 to 15	0.50 to 1.50	—	—	—	—	—	—	—	—	0.0043	0.0045
	16 to 30	1.501 to 3.00	—	—	—	—	—	—	—	—	0.0053	0.0055
8	5 to 15	0.62 to 1.88	—	—	—	—	—	—	—	—	—	0.0049
	16 to 30	1.881 to 3.76	—	—	—	—	—	—	—	—	—	0.0062
7	5 to 15	0.71 to 2.14	—	—	—	—	—	—	—	—	—	—
	16 to 30	2.141 to 4.29	—	—	—	—	—	—	—	—	—	—
6	5 to 15	0.83 to 2.50	—	—	—	—	—	—	—	—	—	—
	16 to 30	2.501 to 5.00	—	—	—	—	—	—	—	—	—	—
4	5 to 15	1.25 to 3.75	—	—	—	—	—	—	—	—	—	—
	16 to 30	3.751 to 7.50	—	—	—	—	—	—	—	—	—	—

UNIFIED AND AMERICAN SCREW THREADS - APPENDIX G

TABLE 28 (CONTINUED) CLASS 3, PITCH DIAMETER TOLERANCES FOR THREADS OF SPECIAL DIAMETERS, PITCHES, AND LENGTHS OF ENGAGEMENT (NS SERIES)

Basic Major (Nominal) Diameter													Threads Per Inch
1-1/4 1.1251 to 1.3750	1-1/2 1.3751 to 1.6250	1-3/4 1.6251 to 1.8750	2 1.8751 to 2.2500	2-1/2 2.2501 to 2.7500	3 2.7501 to 3.2500	3-1/2 3.2501 to 3.7500	4 3.7501 to 4.5000	5 4.5001 to 5.5000	6 5.5001 to 7.0000	8 7.0001 to 9.0000	10 9.0001 to 11.0000	12 11.0001 to 13.0000	
—	—	—	—	—									80
—	—	—	—	—									
—	—	—	—	—									72
—	—	—	—	—									
—	—	—	—	—									64
—	—	—	—	—									
—	—	—	—	—									56
—	—	—	—	—									
—	—	—	—	—									48
—	—	—	—	—									
—	—	—	—	—									40
—	—	—	—	—									
0.0030	0.0031	—	—	—	—	—	—	—	—	—	—	—	36
0.0032	0.0034	—	—	—	—	—	—	—	—	—	—	—	
0.0031	0.0032	0.0034	0.0035	0.0037	0.0039	—	—	—	—	—	—	—	32
0.0034	0.0035	0.0037	0.0038	0.0040	0.0042	—	—	—	—	—	—	—	
0.0032	0.0033	0.0035	0.0036	0.0038	0.0040	0.0042	0.0044	—	—	—	—	—	28
0.0036	0.0037	0.0038	0.0040	0.0042	0.0044	0.0046	0.0048	—	—	—	—	—	
0.0033	0.0035	0.0036	0.0038	0.0040	0.0042	0.0044	0.0046	0.0049	0.0052	—	—	—	24
0.0038	0.0039	0.0041	0.0042	0.0044	0.0046	0.0048	0.0050	0.0053	0.0056	—	—	—	
0.0035	0.0037	0.0038	0.0040	0.0042	0.0044	0.0046	0.0048	0.0051	0.0054	—	—	—	20
0.0041	0.0042	0.0043	0.0045	0.0047	0.0049	0.0051	0.0053	0.0056	0.0059	—	—	—	
0.0037	0.0038	0.0040	0.0041	0.0043	0.0045	0.0047	0.0049	0.0052	0.0055	0.0061	—	—	18
0.0042	0.0044	0.0045	0.0047	0.0049	0.0051	0.0053	0.0055	0.0058	0.0061	0.0066	—	—	
0.0038	0.0040	0.0041	0.0043	0.0045	0.0047	0.0049	0.0051	0.0054	0.0057	0.0062	0.0067	—	16
0.0045	0.0046	0.0048	0.0049	0.0051	0.0053	0.0055	0.0057	0.0060	0.0063	0.0069	0.0073	—	
0.0040	0.0042	0.0043	0.0044	0.0047	0.0049	0.0051	0.0053	0.0056	0.0059	0.0064	0.0069	0.0073	14
0.0048	0.0049	0.0051	0.0052	0.0054	0.0056	0.0058	0.0060	0.0063	0.0066	0.0072	0.0076	0.0081	
0.0043	0.0044	0.0046	0.0047	0.0049	0.0051	0.0053	0.0055	0.0058	0.0061	0.0067	0.0071	0.0076	12
0.0051	0.0053	0.0054	0.0056	0.0058	0.0060	0.0062	0.0064	0.0067	0.0070	0.0075	0.0080	0.0084	
0.0046	0.0048	0.0049	0.0050	0.0053	0.0055	0.0057	0.0059	0.0062	0.0065	0.0070	0.0075	0.0079	10
0.0056	0.0058	0.0059	0.0061	0.0063	0.0065	0.0067	0.0069	0.0072	0.0075	0.0080	0.0085	0.0089	
0.0051	0.0052	0.0054	0.0055	0.0057	0.0059	0.0061	0.0063	0.0067	0.0070	0.0075	0.0079	0.0084	8
0.0064	0.0065	0.0067	0.0068	0.0070	0.0072	0.0074	0.0076	0.0079	0.0082	0.0088	0.0092	0.0097	
0.0054	0.0056	0.0057	0.0058	0.0061	0.0063	0.0065	0.0066	0.0070	0.0073	0.0078	0.0083	0.0087	7
0.0069	0.0070	0.0072	0.0073	0.0075	0.0077	0.0079	0.0081	0.0084	0.0087	0.0093	0.0097	0.0102	
—	0.0060	0.0061	0.0062	0.0065	0.0067	0.0069	0.0071	0.0074	0.0077	0.0082	0.0087	0.0091	6
—	0.0077	0.0078	0.0079	0.0082	0.0084	0.0086	0.0088	0.0091	0.0094	0.0099	0.0104	0.0108	
—	—	—	0.0076	0.0078	0.0080	0.0082	0.0084	0.0087	0.0090	0.0096	0.0100	0.0104	4
—	—	—	0.0101	0.0104	0.0106	0.0108	0.0110	0.0113	0.0116	0.0121	0.0126	0.0130	

NOTES

1. These values do not agree with and shall not be used in place of any tabulated values for the NC, NF, 8N, 12N, 16N, and NEF thread series, in Tables 2 and 3.
2. Formula:
   Class 3 tolerances are determined by multiplying Class 2 tolerances (computed to six decimal places) by 0.7. See Note 2, Table 27, for formula for Class 2 tolerances.
3. Length of engagement increments included in the tabulated tolerances for lengths of engagement of from 5 to 15 pitches are based on lengths of 9 pitches; those for lengths of engagement greater than 15 to 30 pitches are based on lengths of 20 pitches. For lengths of engagement not tabulated, the formula in Note 2 should be applied.
4. Pitches listed are those used most commonly and are recommended. Where intermediate pitches are specified, the formula in Note 2 should be applied.
5. Tolerances are tabulated only for combinations of diameter, pitch, and length of engagement which are considered to be generally used. For other combinations encountered, see Limitations of Design, Appendix F.

UNIFIED AND AMERICAN SCREW THREADS-APPENDIX G

TABLE 29 - CLASSES 1B AND 2B, MINOR DIAMETER TOLERANCES FOR INTERNAL SPECIAL SCREW THREADS (UNS AND NS SERIES)

Threads Per Inch	Lengths of Engagement in Terms of Diameter[a]		Basic Major (Nominal) Diameter[b]										
	Over →	To → (Incl.)	0.053	0.066	0.079	0.092	0.105	0.118	0.131	0.151	0.177	0.203	All larger diameters
			0.066	0.079	0.092	0.105	0.118	0.131	0.151	0.177	0.203	0.233	
80	—	1/3 D	0.0035	0.0029	0.0025	0.0022	0.0020	0.0018	0.0017	0.0016	0.0016	0.0016	0.0016
	1/3 D	2/3 D	0.0049	0.0044	0.0038	0.0034	0.0030	0.0028	0.0026	0.0023	0.0023	0.0023	0.0023
	2/3 D	1-1/2 D	0.0049	0.0049	0.0049	0.0045	0.0040	0.0037	0.0034	0.0031	0.0031	0.0031	0.0031
	1-1/2 D	3 D	0.0049	0.0049	0.0049	0.0049	0.0049	0.0046	0.0043	0.0039	0.0039	0.0039	0.0039
72	—	1/3 D	0.0039	0.0033	0.0029	0.0026	0.0023	0.0021	0.0020	0.0017	0.0017	0.0017	0.0017
	1/3 D	2/3 D	0.0055	0.0049	0.0043	0.0038	0.0035	0.0032	0.0029	0.0026	0.0026	0.0026	0.0026
	2/3 D	1-1/2 D	0.0055	0.0055	0.0055	0.0051	0.0046	0.0042	0.0039	0.0034	0.0034	0.0034	0.0034
	1-1/2 D	3 D	0.0055	0.0055	0.0055	0.0055	0.0055	0.0053	0.0049	0.0043	0.0042	0.0042	0.0042
64	—	1/3 D	0.0045	0.0038	0.0033	0.0029	0.0027	0.0024	0.0023	0.0020	0.0019	0.0019	0.0019
	1/3 D	2/3 D	0.0062	0.0057	0.0049	0.0044	0.0040	0.0037	0.0034	0.0030	0.0028	0.0028	0.0028
	2/3 D	1-1/2 D	0.0062	0.0062	0.0062	0.0059	0.0053	0.0049	0.0045	0.0040	0.0038	0.0038	0.0038
	1-1/2 D	3 D	0.0062	0.0062	0.0062	0.0062	0.0062	0.0061	0.0057	0.0050	0.0048	0.0048	0.0048
56	—	1/3 D	—	0.0044	0.0038	0.0034	0.0031	0.0029	0.0026	0.0023	0.0022	0.0022	0.0022
	1/3 D	2/3 D	—	0.0066	0.0057	0.0051	0.0046	0.0043	0.0040	0.0035	0.0032	0.0032	0.0032
	2/3 D	1-1/2 D	—	0.0070	0.0070	0.0068	0.0062	0.0057	0.0053	0.0047	0.0043	0.0043	0.0043
	1-1/2 D	3 D	—	0.0070	0.0070	0.0070	0.0070	0.0070	0.0066	0.0059	0.0054	0.0054	0.0054
48	—	1/3 D	—	—	0.0045	0.0040	0.0037	0.0034	0.0032	0.0028	0.0025	0.0025	0.0025
	1/3 D	2/3 D	—	—	0.0068	0.0061	0.0055	0.0051	0.0047	0.0042	0.0038	0.0038	0.0038
	2/3 D	1-1/2 D	—	—	0.0082	0.0081	0.0074	0.0068	0.0063	0.0056	0.0051	0.0050	0.0050
	1-1/2 D	3 D	—	—	0.0082	0.0082	0.0082	0.0082	0.0079	0.0070	0.0063	0.0062	0.0062
44	—	1/3 D	—	—	0.0050	0.0044	0.0040	0.0038	0.0035	0.0031	0.0028	0.0028	0.0028
	1/3 D	2/3 D	—	—	0.0074	0.0067	0.0061	0.0056	0.0052	0.0046	0.0042	0.0041	0.0041
	2/3 D	1-1/2 D	—	—	0.0089	0.0089	0.0081	0.0075	0.0070	0.0062	0.0056	0.0055	0.0055
	1-1/2 D	3 D	—	—	0.0089	0.0089	0.0089	0.0089	0.0088	0.0078	0.0070	0.0069	0.0069
40	—	1/3 D	—	—	—	0.0049	0.0045	0.0041	0.0039	0.0034	0.0031	0.0030	0.0030
	1/3 D	2/3 D	—	—	—	0.0074	0.0067	0.0062	0.0058	0.0051	0.0047	0.0045	0.0045
	2/3 D	1-1/2 D	—	—	—	0.0098	0.0090	0.0083	0.0077	0.0068	0.0062	0.0060	0.0060
	1-1/2 D	3 D	—	—	—	0.0098	0.0098	0.0098	0.0096	0.0086	0.0078	0.0075	0.0075
36	—	1/3 D	—	—	—	—	0.0050	0.0046	0.0043	0.0038	0.0035	0.0033	0.0033
	1/3 D	2/3 D	—	—	—	—	0.0075	0.0069	0.0065	0.0058	0.0052	0.0050	0.0050
	2/3 D	1-1/2 D	—	—	—	—	0.0100	0.0093	0.0086	0.0077	0.0070	0.0066	0.0066
	1-1/2 D	3 D	—	—	—	—	0.0109	0.0109	0.0108	0.0096	0.0087	0.0082	0.0082
32	—	1/3 D	—	—	—	—	—	—	0.0049	0.0043	0.0039	0.0037	0.0037
	1/3 D	2/3 D	—	—	—	—	—	—	0.0073	0.0065	0.0059	0.0056	0.0056
	2/3 D	1-1/2 D	—	—	—	—	—	—	0.0098	0.0087	0.0079	0.0074	0.0074
	1-1/2 D	3 D	—	—	—	—	—	—	0.0122	0.0108	0.0099	0.0092	0.0092
28	—	1/3 D	—	—	—	—	—	—	—	—	0.0045	0.0042	0.0042
	1/3 D	2/3 D	—	—	—	—	—	—	—	—	0.0068	0.0063	0.0063
	2/3 D	1-1/2 D	—	—	—	—	—	—	—	—	0.0091	0.0084	0.0084
	1-1/2 D	3 D	—	—	—	—	—	—	—	—	0.0113	0.0105	0.0105

NOTE: If the minor diameter tolerance as selected from this table is less than the pitch diameter tolerance, use the latter. See Limitations of Design, Appendix F.

a Tolerances for lengths of engagement in terms of pitch should be selected from equivalent lengths of engagement in terms of diameter ranges.

b Basic major (nominal) diameter ranges are based on the nominal diameter of number and fractional sizes.

UNIFIED AND AMERICAN SCREW THREADS—APPENDIX G

TABLE 29(CONTINUED) CLASSES IB AND 2B, MINOR DIAMETER TOLERANCES FOR INTERNAL SPECIAL SCREW THREADS (UNS AND NS SERIES)

Threads Per Inch	Lengths of Engagement in Terms of Diameter[a]		Basic Major (Nominal) Diameter[b]										
	Over →	To → (Incl.)	0.053	0.066	0.079	0.092	0.105	0.118	0.131	0.151	0.177	0.203	All larger diameters
			0.066	0.079	0.092	0.105	0.118	0.131	0.151	0.177	0.203	0.233	
27	—	1/3 D	—	—	—	—	—	—	—	—	0.0047	0.0044	0.0044
	1/3 D	2/3 D	—	—	—	—	—	—	—	—	0.0071	0.0065	0.0065
	2/3 D	1-1/2 D	—	—	—	—	—	—	—	—	0.0094	0.0087	0.0087
	1-1/2 D	3 D	—	—	—	—	—	—	—	—	0.0118	0.0109	0.0109
24	—	1/3 D	—	—	—	—	—	—	—	—	0.0053	0.0049	0.0048
	1/3 D	2/3 D	—	—	—	—	—	—	—	—	0.0079	0.0073	0.0073
	2/3 D	1-1/2 D	—	—	—	—	—	—	—	—	0.0106	0.0098	0.0097
	1-1/2 D	3 D	—	—	—	—	—	—	—	—	0.0132	0.0122	0.0121
20	—	1/3 D	—	—	—	—	—	—	—	—	—	—	0.0058
	1/3 D	2/3 D	—	—	—	—	—	—	—	—	—	—	0.0086
	2/3 D	1-1/2 D	—	—	—	—	—	—	—	—	—	—	0.0115
	1-1/2 D	3 D	—	—	—	—	—	—	—	—	—	—	0.0144
18	—	1/3 D	—	—	—	—	—	—	—	—	—	—	0.0064
	1/3 D	2/3 D	—	—	—	—	—	—	—	—	—	—	0.0095
	2/3 D	1-1/2 D	—	—	—	—	—	—	—	—	—	—	0.0127
	1-1/2 D	3 D	—	—	—	—	—	—	—	—	—	—	0.0159
16	—	1/3 D	—	—	—	—	—	—	—	—	—	—	0.0070
	1/3 D	2/3 D	—	—	—	—	—	—	—	—	—	—	0.0106
	2/3 D	1-1/2 D	—	—	—	—	—	—	—	—	—	—	0.0141
	1-1/2 D	3 D	—	—	—	—	—	—	—	—	—	—	0.0176
14	—	1/3 D	—	—	—	—	—	—	—	—	—	—	0.0079
	1/3 D	2/3 D	—	—	—	—	—	—	—	—	—	—	0.0118
	2/3 D	1-1/2 D	—	—	—	—	—	—	—	—	—	—	0.0158
	1-1/2 D	3 D	—	—	—	—	—	—	—	—	—	—	0.0198
12	—	1/3 D	—	—	—	—	—	—	—	—	—	—	0.0090
	1/3 D	2/3 D	—	—	—	—	—	—	—	—	—	—	0.0135
	2/3 D	1-1/2 D	—	—	—	—	—	—	—	—	—	—	0.0180
	1-1/2 D	3 D	—	—	—	—	—	—	—	—	—	—	0.0225
10	—	1/3 D	—	—	—	—	—	—	—	—	—	—	0.0105
	1/3 D	2/3 D	—	—	—	—	—	—	—	—	—	—	0.0158
	2/3 D	1-1/2 D	—	—	—	—	—	—	—	—	—	—	0.0210
	1-1/2 D	3 D	—	—	—	—	—	—	—	—	—	—	0.0262
8	—	1/3 D	—	—	—	—	—	—	—	—	—	—	0.0125
	1/3 D	2/3 D	—	—	—	—	—	—	—	—	—	—	0.0188
	2/3 D	1-1/2 D	—	—	—	—	—	—	—	—	—	—	0.0250
	1-1/2 D	3 D	—	—	—	—	—	—	—	—	—	—	0.0312
6	—	1/3 D	—	—	—	—	—	—	—	—	—	—	0.0153
	1/3 D	2/3 D	—	—	—	—	—	—	—	—	—	—	0.0230
	2/3 D	1-1/2 D	—	—	—	—	—	—	—	—	—	—	0.0306
	1-1/2 D	3 D	—	—	—	—	—	—	—	—	—	—	0.0382
4	—	1/3 D	—	—	—	—	—	—	—	—	—	—	0.0188
	1/3 D	2/3 D	—	—	—	—	—	—	—	—	—	—	0.0281
	2/3 D	1-1/2 D	—	—	—	—	—	—	—	—	—	—	0.0375
	1-1/2 D	3 D	—	—	—	—	—	—	—	—	—	—	0.0469

UNIFIED AND AMERICAN SCREW THREADS - APPENDIX G

TABLE 30 - CLASS 3B, MINOR DIAMETER TOLERANCES FOR INTERNAL SPECIAL THREADS (UNS AND NS SERIES)

Threads Per Inch	Length of Engagement in Terms of Diameter[a]		Basic Major (Nominal) Diameter[b]									
	Over →		0.053	0.066	0.079	0.092	0.105	0.118	0.131	0.151	0.177	0.203
	↓	To → (Incl.)	0.066	0.079	0.092	0.105	0.118	0.131	0.151	0.177	0.203	0.233
80	—	⅓ D	0.0035	0.0029	0.0025	0.0022	0.0020	0.0018	0.0017	0.0015	0.0013	0.0013
	⅓ D	⅔ D	0.0049	0.0044	0.0038	0.0034	0.0030	0.0028	0.0026	0.0022	0.0020	0.0020
	⅔ D	1½ D	0.0049	0.0049	0.0049	0.0045	0.0040	0.0037	0.0034	0.0030	0.0027	0.0026
	1½ D	3 D	0.0049	0.0049	0.0049	0.0049	0.0049	0.0046	0.0043	0.0037	0.0033	0.0033
72	—	⅓ D	0.0039	0.0033	0.0029	0.0026	0.0023	0.0021	0.0020	0.0017	0.0015	0.0015
	⅓ D	⅔ D	0.0055	0.0049	0.0043	0.0038	0.0035	0.0032	0.0029	0.0026	0.0023	0.0022
	⅔ D	1½ D	0.0055	0.0055	0.0055	0.0051	0.0046	0.0042	0.0039	0.0034	0.0031	0.0029
	1½ D	3 D	0.0055	0.0055	0.0055	0.0055	0.0055	0.0053	0.0049	0.0043	0.0039	0.0036
64	—	⅓ D	0.0045	0.0038	0.0033	0.0029	0.0027	0.0024	0.0023	0.0020	0.0018	0.0016
	⅓ D	⅔ D	0.0062	0.0057	0.0049	0.0044	0.0040	0.0037	0.0034	0.0030	0.0027	0.0025
	⅔ D	1½ D	0.0062	0.0062	0.0062	0.0059	0.0053	0.0049	0.0045	0.0040	0.0036	0.0033
	1½ D	3 D	0.0062	0.0062	0.0062	0.0062	0.0062	0.0061	0.0057	0.0050	0.0045	0.0041
56	—	⅓ D	—	0.0044	0.0038	0.0034	0.0031	0.0029	0.0026	0.0023	0.0021	0.0019
	⅓ D	⅔ D	—	0.0066	0.0057	0.0051	0.0046	0.0043	0.0040	0.0035	0.0032	0.0029
	⅔ D	1½ D	—	0.0070	0.0070	0.0068	0.0062	0.0057	0.0053	0.0047	0.0042	0.0039
	1½ D	3 D	—	0.0070	0.0070	0.0070	0.0070	0.0070	0.0066	0.0059	0.0053	0.0049
48	—	⅓ D	—	—	0.0045	0.0040	0.0037	0.0034	0.0032	0.0028	0.0025	0.0023
	⅓ D	⅔ D	—	—	0.0068	0.0061	0.0055	0.0051	0.0047	0.0042	0.0038	0.0035
	⅔ D	1½ D	—	—	0.0082	0.0081	0.0074	0.0068	0.0063	0.0056	0.0051	0.0047
	1½ D	3 D	—	—	0.0082	0.0082	0.0082	0.0082	0.0079	0.0070	0.0063	0.0059
40	—	⅓ D	—	—	—	0.0049	0.0045	0.0041	0.0039	0.0034	0.0031	0.0029
	⅓ D	⅔ D	—	—	—	0.0074	0.0067	0.0062	0.0058	0.0051	0.0047	0.0043
	⅔ D	1½ D	—	—	—	0.0098	0.0090	0.0083	0.0077	0.0068	0.0062	0.0057
	1½ D	3 D	—	—	—	0.0098	0.0098	0.0098	0.0096	0.0086	0.0078	0.0072
36	—	⅓ D	—	—	—	—	0.0050	0.0046	0.0043	0.0038	0.0035	0.0032
	⅓ D	⅔ D	—	—	—	—	0.0075	0.0069	0.0065	0.0058	0.0052	0.0048
	⅔ D	1½ D	—	—	—	—	0.0100	0.0093	0.0086	0.0077	0.0070	0.0064
	1½ D	3 D	—	—	—	—	0.0109	0.0109	0.0108	0.0096	0.0087	0.0081
32	—	⅓ D	—	—	—	—	—	—	0.0049	0.0043	0.0039	0.0036
	⅓ D	⅔ D	—	—	—	—	—	—	0.0073	0.0065	0.0059	0.0055
	⅔ D	1½ D	—	—	—	—	—	—	0.0098	0.0087	0.0079	0.0073
	1½ D	3 D	—	—	—	—	—	—	0.0122	0.0108	0.0099	0.0091
28	—	⅓ D	—	—	—	—	—	—	—	—	0.0045	0.0042
	⅓ D	⅔ D	—	—	—	—	—	—	—	—	0.0068	0.0063
	⅔ D	1½ D	—	—	—	—	—	—	—	—	0.0091	0.0084
	1½ D	3 D	—	—	—	—	—	—	—	—	0.0113	0.0105
24	—	⅓ D	—	—	—	—	—	—	—	—	0.0053	0.0049
	⅓ D	⅔ D	—	—	—	—	—	—	—	—	0.0079	0.0073
	⅔ D	1½ D	—	—	—	—	—	—	—	—	0.0106	0.0098
	1½ D	3 D	—	—	—	—	—	—	—	—	0.0132	0.0122

NOTE: If the minor diameter tolerance as selected from this table is less than the pitch diameter tolerance, use the latter. See Limitations of Design, Appendix F.

a Tolerances for lengths of engagement in terms of pitch should be selected from equivalent lengths of engagement in terms of diameter ranges.

b Basic major (nominal) diameter ranges are based on the nominal diameter of number and fractional sizes.

UNIFIED AND AMERICAN SCREW THREADS - APPENDIX G

TABLE 30 (CONTINUED) CLASS 3B, MINOR DIAMETER TOLERANCES FOR INTERNAL SPECIAL THREADS (UNS AND NS SERIES)

Basic Major (Nominal) Diameter													Threads Per Inch
0.233	0.281	0.344	0.406	0.469	0.531	0.594	0.656	0.719	0.781	0.844	0.906	All larger diameters	
0.281	0.344	0.406	0.469	0.531	0.594	0.656	0.719	0.781	0.844	0.906	0.969		
0.0013	0.0013	—	—	—	—	—	—	—	—	—	—	—	80
0.0020	0.0020	—	—	—	—	—	—	—	—	—	—	—	
0.0026	0.0026	—	—	—	—	—	—	—	—	—	—	—	
0.0033	0.0033	—	—	—	—	—	—	—	—	—	—	—	
0.0015	0.0015	0.0015	0.0015	—	—	—	—	—	—	—	—	—	72
0.0022	0.0022	0.0022	0.0022	—	—	—	—	—	—	—	—	—	
0.0029	0.0029	0.0029	0.0029	—	—	—	—	—	—	—	—	—	
0.0036	0.0036	0.0036	0.0036	—	—	—	—	—	—	—	—	—	
0.0016	0.0016	0.0016	0.0016	0.0016	0.0016	—	—	—	—	—	—	—	64
0.0024	0.0024	0.0024	0.0024	0.0024	0.0024	—	—	—	—	—	—	—	
0.0032	0.0032	0.0032	0.0032	0.0032	0.0032	—	—	—	—	—	—	—	
0.0040	0.0040	0.0040	0.0040	0.0040	0.0040	—	—	—	—	—	—	—	
0.0018	0.0018	0.0018	0.0018	0.0018	0.0018	0.0018	0.0018	0.0018	0.0018	0.0018	—	—	56
0.0027	0.0027	0.0027	0.0027	0.0027	0.0027	0.0027	0.0027	0.0027	0.0027	0.0027	—	—	
0.0036	0.0036	0.0036	0.0036	0.0036	0.0036	0.0036	0.0036	0.0036	0.0036	0.0036	—	—	
0.0045	0.0045	0.0045	0.0045	0.0045	0.0045	0.0045	0.0045	0.0045	0.0045	0.0045	—	—	
0.0021	0.0021	0.0021	0.0021	0.0021	0.0021	0.0021	0.0021	0.0021	0.0021	0.0021	—	—	48
0.0032	0.0031	0.0031	0.0031	0.0031	0.0031	0.0031	0.0031	0.0031	0.0031	0.0031	—	—	
0.0043	0.0041	0.0041	0.0041	0.0041	0.0041	0.0041	0.0041	0.0041	0.0041	0.0041	—	—	
0.0054	0.0052	0.0052	0.0052	0.0052	0.0052	0.0052	0.0052	0.0052	0.0052	0.0052	—	—	
0.0026	0.0024	0.0024	0.0024	0.0024	0.0024	0.0024	0.0024	0.0024	0.0024	0.0024	0.0024	0.0024	40
0.0040	0.0036	0.0036	0.0036	0.0036	0.0036	0.0036	0.0036	0.0036	0.0036	0.0036	0.0036	0.0036	
0.0053	0.0048	0.0048	0.0048	0.0048	0.0048	0.0048	0.0048	0.0048	0.0048	0.0048	0.0048	0.0048	
0.0066	0.0060	0.0060	0.0060	0.0060	0.0060	0.0060	0.0060	0.0060	0.0060	0.0060	0.0060	0.0060	
0.0030	0.0026	0.0026	0.0026	0.0026	0.0026	0.0026	0.0026	0.0026	0.0026	0.0026	0.0026	0.0026	36
0.0044	0.0039	0.0039	0.0039	0.0039	0.0039	0.0039	0.0039	0.0039	0.0039	0.0039	0.0039	0.0039	
0.0059	0.0053	0.0052	0.0052	0.0052	0.0052	0.0052	0.0052	0.0052	0.0052	0.0052	0.0052	0.0052	
0.0074	0.0066	0.0065	0.0065	0.0065	0.0065	0.0065	0.0065	0.0065	0.0065	0.0065	0.0065	0.0065	
0.0034	0.0030	0.0029	0.0029	0.0029	0.0029	0.0029	0.0029	0.0029	0.0029	0.0029	0.0029	0.0029	32
0.0050	0.0045	0.0043	0.0043	0.0043	0.0043	0.0043	0.0043	0.0043	0.0043	0.0043	0.0043	0.0043	
0.0067	0.0060	0.0057	0.0057	0.0057	0.0057	0.0057	0.0057	0.0057	0.0057	0.0057	0.0057	0.0057	
0.0084	0.0075	0.0072	0.0072	0.0072	0.0072	0.0072	0.0072	0.0072	0.0072	0.0072	0.0072	0.0072	
0.0039	0.0034	0.0032	0.0032	0.0032	0.0032	0.0032	0.0032	0.0032	0.0032	0.0032	0.0032	0.0032	28
0.0058	0.0051	0.0047	0.0047	0.0047	0.0047	0.0047	0.0047	0.0047	0.0047	0.0047	0.0047	0.0047	
0.0077	0.0069	0.0063	0.0063	0.0063	0.0063	0.0063	0.0063	0.0063	0.0063	0.0063	0.0063	0.0063	
0.0096	0.0086	0.0079	0.0079	0.0079	0.0079	0.0079	0.0079	0.0079	0.0079	0.0079	0.0079	0.0079	
0.0045	0.0040	0.0037	0.0035	0.0035	0.0035	0.0035	0.0035	0.0035	0.0035	0.0035	0.0035	0.0035	24
0.0068	0.0060	0.0055	0.0052	0.0052	0.0052	0.0052	0.0052	0.0052	0.0052	0.0052	0.0052	0.0052	
0.0090	0.0080	0.0073	0.0070	0.0070	0.0070	0.0070	0.0070	0.0070	0.0070	0.0070	0.0070	0.0070	
0.0113	0.0100	0.0092	0.0087	0.0087	0.0087	0.0087	0.0087	0.0087	0.0087	0.0087	0.0087	0.0087	

UNIFIED AND AMERICAN SCREW THREADS - APPENDIX G

TABLE 30 (CONTINUED) CLASS 3B, MINOR DIAMETER TOLERANCES FOR INTERNAL SPECIAL THREADS (UNS AND NS SERIES)

Threads Per Inch	Length of Engagement in Terms of Diameter[a]		Basic Major (Nominal) Diameter[b]									
	Over →		0.053	0.066	0.079	0.092	0.105	0.118	0.131	0.151	0.177	0.203
	↓	To → (Incl.)	0.066	0.079	0.092	0.105	0.118	0.131	0.151	0.177	0.203	0.233
20	—	1/3 D	—	—	—	—	—	—	—	—	—	—
	1/3 D	2/3 D	—	—	—	—	—	—	—	—	—	—
	2/3 D	1 1/2 D	—	—	—	—	—	—	—	—	—	—
	1 1/2 D	3 D	—	—	—	—	—	—	—	—	—	—
18	—	1/3 D	—	—	—	—	—	—	—	—	—	—
	1/3 D	2/3 D	—	—	—	—	—	—	—	—	—	—
	2/3 D	1 1/2 D	—	—	—	—	—	—	—	—	—	—
	1 1/2 D	3 D	—	—	—	—	—	—	—	—	—	—
16	—	1/3 D	—	—	—	—	—	—	—	—	—	—
	1/3 D	2/3 D	—	—	—	—	—	—	—	—	—	—
	2/3 D	1 1/2 D	—	—	—	—	—	—	—	—	—	—
	1 1/2 D	3 D	—	—	—	—	—	—	—	—	—	—
14	—	1/3 D	—	—	—	—	—	—	—	—	—	—
	1/3 D	2/3 D	—	—	—	—	—	—	—	—	—	—
	2/3 D	1 1/2 D	—	—	—	—	—	—	—	—	—	—
	1 1/2 D	3 D	—	—	—	—	—	—	—	—	—	—
12	—	1/3 D	—	—	—	—	—	—	—	—	—	—
	1/3 D	2/3 D	—	—	—	—	—	—	—	—	—	—
	2/3 D	1 1/2 D	—	—	—	—	—	—	—	—	—	—
	1 1/2 D	3 D	—	—	—	—	—	—	—	—	—	—
10	—	1/3 D	—	—	—	—	—	—	—	—	—	—
	1/3 D	2/3 D	—	—	—	—	—	—	—	—	—	—
	2/3 D	1 1/2 D	—	—	—	—	—	—	—	—	—	—
	1 1/2 D	3 D	—	—	—	—	—	—	—	—	—	—
8	—	1/3 D	—	—	—	—	—	—	—	—	—	—
	1/3 D	2/3 D	—	—	—	—	—	—	—	—	—	—
	2/3 D	1 1/2 D	—	—	—	—	—	—	—	—	—	—
	1 1/2 D	3 D	—	—	—	—	—	—	—	—	—	—
7	—	1/3 D	—	—	—	—	—	—	—	—	—	—
	1/3 D	2/3 D	—	—	—	—	—	—	—	—	—	—
	2/3 D	1 1/2 D	—	—	—	—	—	—	—	—	—	—
	1 1/2 D	3 D	—	—	—	—	—	—	—	—	—	—
6	—	1/3 D	—	—	—	—	—	—	—	—	—	—
	1/3 D	2/3 D	—	—	—	—	—	—	—	—	—	—
	2/3 D	1 1/2 D	—	—	—	—	—	—	—	—	—	—
	1 1/2 D	3 D	—	—	—	—	—	—	—	—	—	—
4	—	1/3 D	—	—	—	—	—	—	—	—	—	—
	1/3 D	2/3 D	—	—	—	—	—	—	—	—	—	—
	2/3 D	1 1/2 D	—	—	—	—	—	—	—	—	—	—
	1 1/2 D	3 D	—	—	—	—	—	—	—	—	—	—

NOTE: If the minor diameter tolerance as selected from this table is less than the pitch diameter tolerance, use the latter. See Limitations of Design, Appendix F.

a Tolerances for lengths of engagement in terms of pitch should be selected from equivalent lengths of engagement in terms of diameter ranges.

b Basic major (nominal) diameter ranges are based on the nominal diameter of number and fractional sizes.

UNIFIED AND AMERICAN SCREW THREADS - APPENDIX G

TABLE 30 (CONTINUED) CLASS 3B, MINOR DIAMETER TOLERANCES FOR INTERNAL SPECIAL THREADS (UNS AND NS SERIES)

Basic Major (Nominal) Diameter													Threads Per Inch
0.233	0.281	0.344	0.406	0.469	0.531	0.594	0.656	0.719	0.781	0.844	0.906	All larger diameters	
0.281	0.344	0.406	0.469	0.531	0.594	0.656	0.719	0.781	0.844	0.906	0.969		
0.0054	0.0048	0.0044	0.0041	0.0039	0.0039	0.0039	0.0039	0.0039	0.0039	0.0039	0.0039	0.0039	20
0.0081	0.0072	0.0066	0.0062	0.0058	0.0058	0.0058	0.0058	0.0058	0.0058	0.0058	0.0058	0.0058	
0.0108	0.0096	0.0088	0.0082	0.0078	0.0078	0.0078	0.0078	0.0078	0.0078	0.0078	0.0078	0.0078	
0.0135	0.0120	0.0110	0.0103	0.0097	0.0097	0.0097	0.0097	0.0097	0.0097	0.0097	0.0097	0.0097	
—	0.0053	0.0049	0.0045	0.0043	0.0041	0.0041	0.0041	0.0041	0.0041	0.0041	0.0041	0.0041	18
—	0.0080	0.0073	0.0068	0.0065	0.0062	0.0061	0.0061	0.0061	0.0061	0.0061	0.0061	0.0061	
—	0.0106	0.0097	0.0091	0.0086	0.0082	0.0081	0.0081	0.0081	0.0081	0.0081	0.0081	0.0081	
—	0.0133	0.0122	0.0114	0.0108	0.0103	0.0102	0.0102	0.0102	0.0102	0.0102	0.0102	0.0102	
—	—	0.0054	0.0051	0.0048	0.0046	0.0044	0.0043	0.0043	0.0043	0.0043	0.0043	0.0043	16
—	—	0.0082	0.0076	0.0072	0.0069	0.0067	0.0064	0.0064	0.0064	0.0064	0.0064	0.0064	
—	—	0.0109	0.0102	0.0096	0.0092	0.0089	0.0086	0.0085	0.0085	0.0085	0.0085	0.0085	
—	—	0.0136	0.0127	0.0120	0.0115	0.0111	0.0108	0.0106	0.0106	0.0106	0.0106	0.0106	
—	—	—	0.0058	0.0054	0.0052	0.0050	0.0049	0.0047	0.0046	0.0045	0.0044	0.0044	14
—	—	—	0.0086	0.0082	0.0078	0.0075	0.0073	0.0071	0.0069	0.0068	0.0067	0.0066	
—	—	—	0.0115	0.0109	0.0104	0.0100	0.0097	0.0095	0.0092	0.0091	0.0089	0.0088	
—	—	—	0.0144	0.0136	0.0130	0.0125	0.0122	0.0118	0.0116	0.0113	0.0111	0.0110	
—	—	—	—	0.0063	0.0060	0.0058	0.0056	0.0054	0.0053	0.0052	0.0051	0.0050	12
—	—	—	—	0.0094	0.0090	0.0087	0.0084	0.0082	0.0080	0.0078	0.0077	0.0075	
—	—	—	—	0.0125	0.0120	0.0115	0.0112	0.0109	0.0106	0.0104	0.0102	0.0100	
—	—	—	—	0.0157	0.0150	0.0144	0.0140	0.0136	0.0133	0.0130	0.0128	0.0125	
—	—	—	—	—	—	—	0.0066	0.0064	0.0062	0.0061	0.0060	0.0060	10
—	—	—	—	—	—	—	0.0099	0.0096	0.0093	0.0092	0.0090	0.0090	
—	—	—	—	—	—	—	0.0131	0.0128	0.0125	0.0122	0.0120	0.0120	
—	—	—	—	—	—	—	0.0164	0.0160	0.0156	0.0153	0.0150	0.0150	
—	—	—	—	—	—	—	—	—	0.0075	0.0075	0.0075	0.0075	8
—	—	—	—	—	—	—	—	—	0.0112	0.0112	0.0112	0.0112	
—	—	—	—	—	—	—	—	—	0.0150	0.0150	0.0150	0.0150	
—	—	—	—	—	—	—	—	—	0.0188	0.0188	0.0188	0.0188	
—	—	—	—	—	—	—	—	—	—	—	0.0086	0.0086	7
—	—	—	—	—	—	—	—	—	—	—	0.0129	0.0129	
—	—	—	—	—	—	—	—	—	—	—	0.0171	0.0171	
—	—	—	—	—	—	—	—	—	—	—	0.0214	0.0214	
—	—	—	—	—	—	—	—	—	—	—	—	0.0100	6
—	—	—	—	—	—	—	—	—	—	—	—	0.0150	
—	—	—	—	—	—	—	—	—	—	—	—	0.0200	
—	—	—	—	—	—	—	—	—	—	—	—	0.0250	
—	—	—	—	—	—	—	—	—	—	—	—	0.0150	4
—	—	—	—	—	—	—	—	—	—	—	—	0.0225	
—	—	—	—	—	—	—	—	—	—	—	—	0.0300	
—	—	—	—	—	—	—	—	—	—	—	—	0.0375	

UNIFIED AND AMERICAN SCREW THREADS - APPENDIX G

TABLE 31-CLASSES 2 AND 3, MINOR DIAMETER TOLERANCES FOR INTERNAL SPECIAL THREADS (NS SERIES)

Threads Per Inch	Length of Engagement in Terms of Diameter[a]		Basic Major (Nominal) Diameter[b]											
	Over →	To → (Incl.)	0.053	0.066	0.079	0.092	0.105	0.118	0.131	0.151	0.177	0.203	0.233	0.281
			0.066	0.079	0.092	0.105	0.118	0.131	0.151	0.177	0.203	0.233	0.281	0.344
80	—	⅓ D	0.0027	0.0022	0.0017	0.0013	0.0013	0.0013	0.0013	0.0013	0.0013	0.0013	0.0013	0.0013
	⅓ D	⅔ D	0.0041	0.0033	0.0026	0.0020	0.0020	0.0020	0.0020	0.0020	0.0020	0.0020	0.0020	0.0020
	⅔ D	1½ D	0.0049	0.0044	0.0034	0.0026	0.0026	0.0026	0.0026	0.0026	0.0026	0.0026	0.0026	0.0026
	1½ D	3 D	0.0049	0.0049	0.0042	0.0033	0.0033	0.0033	0.0033	0.0033	0.0033	0.0033	0.0033	0.0033
72	—	⅓ D	0.0032	0.0027	0.0022	0.0017	0.0013	0.0013	0.0013	0.0013	0.0013	0.0013	0.0013	0.0013
	⅓ D	⅔ D	0.0048	0.0040	0.0033	0.0025	0.0020	0.0020	0.0020	0.0020	0.0020	0.0020	0.0020	0.0020
	⅔ D	1½ D	0.0054	0.0054	0.0044	0.0033	0.0027	0.0027	0.0027	0.0027	0.0027	0.0027	0.0027	0.0027
	1½ D	3 D	0.0054	0.0054	0.0054	0.0041	0.0034	0.0034	0.0034	0.0034	0.0034	0.0034	0.0034	0.0034
64	—	⅓ D	0.0038	0.0033	0.0028	0.0022	0.0017	0.0014	0.0014	0.0014	0.0014	0.0014	0.0014	0.0014
	⅓ D	⅔ D	0.0057	0.0049	0.0041	0.0034	0.0026	0.0021	0.0021	0.0021	0.0021	0.0021	0.0021	0.0021
	⅔ D	1½ D	0.0062	0.0062	0.0055	0.0045	0.0035	0.0028	0.0028	0.0028	0.0028	0.0028	0.0028	0.0028
	1½ D	3 D	0.0062	0.0062	0.0062	0.0056	0.0044	0.0035	0.0035	0.0035	0.0035	0.0035	0.0038	0.0042
56	—	⅓ D	—	0.0040	0.0035	0.0029	0.0024	0.0019	0.0015	0.0015	0.0015	0.0015	0.0015	0.0015
	⅓ D	⅔ D	—	0.0060	0.0052	0.0044	0.0037	0.0029	0.0023	0.0023	0.0023	0.0023	0.0023	0.0023
	⅔ D	1½ D	—	0.0070	0.0069	0.0059	0.0049	0.0038	0.0030	0.0030	0.0030	0.0030	0.0030	0.0030
	1½ D	3 D	—	0.0070	0.0070	0.0070	0.0061	0.0048	0.0038	0.0038	0.0038	0.0038	0.0038	0.0044
48	—	⅓ D	—	—	0.0044	0.0039	0.0033	0.0028	0.0023	0.0016	0.0016	0.0016	0.0016	0.0016
	⅓ D	⅔ D	—	—	0.0066	0.0058	0.0050	0.0042	0.0035	0.0024	0.0024	0.0024	0.0024	0.0024
	⅔ D	1½ D	—	—	0.0082	0.0077	0.0067	0.0057	0.0046	0.0032	0.0032	0.0032	0.0032	0.0032
	1½ D	3 D	—	—	0.0082	0.0082	0.0082	0.0071	0.0058	0.0041	0.0041	0.0041	0.0041	0.0046
40	—	⅓ D	—	—	—	0.0050	0.0045	0.0040	0.0035	0.0025	0.0020	0.0019	0.0019	0.0019
	⅓ D	⅔ D	—	—	—	0.0076	0.0068	0.0060	0.0053	0.0037	0.0030	0.0029	0.0029	0.0029
	⅔ D	1½ D	—	—	—	0.0098	0.0091	0.0080	0.0070	0.0050	0.0040	0.0039	0.0039	0.0039
	1½ D	3 D	—	—	—	0.0098	0.0098	0.0098	0.0088	0.0063	0.0049	0.0049	0.0049	0.0049
36	—	⅓ D	—	—	—	—	0.0053	0.0048	0.0043	0.0032	0.0022	0.0022	0.0022	0.0022
	⅓ D	⅔ D	—	—	—	—	0.0079	0.0072	0.0064	0.0049	0.0033	0.0032	0.0032	0.0032
	⅔ D	1½ D	—	—	—	—	0.0106	0.0095	0.0085	0.0065	0.0044	0.0043	0.0043	0.0043
	1½ D	3 D	—	—	—	—	0.0109	0.0109	0.0106	0.0081	0.0055	0.0052	0.0054	0.0054
32	—	⅓ D	—	—	—	—	—	—	0.0052	0.0041	0.0031	0.0026	0.0024	0.0024
	⅓ D	⅔ D	—	—	—	—	—	—	0.0077	0.0062	0.0046	0.0040	0.0037	0.0037
	⅔ D	1½ D	—	—	—	—	—	—	0.0103	0.0082	0.0062	0.0053	0.0049	0.0049
	1½ D	3 D	—	—	—	—	—	—	0.0123	0.0103	0.0078	0.0066	0.0061	0.0061
28	—	⅓ D	—	—	—	—	—	—	—	—	0.0042	0.0033	0.0030	0.0028
	⅓ D	⅔ D	—	—	—	—	—	—	—	—	0.0068	0.0050	0.0044	0.0042
	⅔ D	1½ D	—	—	—	—	—	—	—	—	0.0084	0.0066	0.0059	0.0056
	1½ D	3 D	—	—	—	—	—	—	—	—	0.0104	0.0083	0.0074	0.0070
24	—	⅓ D	—	—	—	—	—	—	—	—	0.0055	0.0045	0.0038	0.0032
	⅓ D	⅔ D	—	—	—	—	—	—	—	—	0.0083	0.0067	0.0057	0.0049
	⅔ D	1½ D	—	—	—	—	—	—	—	—	0.0110	0.0090	0.0077	0.0065
	1½ D	3 D	—	—	—	—	—	—	—	—	0.0138	0.0112	0.0096	0.0081

NOTE: If the minor diameter tolerance as selected from this table is less than the pitch diameter tolerance, use the latter. See Limitations of Design, Appendix F.

a Tolerances for lengths of engagement in terms of pitch should be selected from equivalent lengths of engagement in terms of diameter ranges.

b Basic major (nominal) diameter ranges are based on the nominal diameter of number and fractional sizes.

UNIFIED AND AMERICAN SCREW THREADS - APPENDIX G

TABLE 31 (CONTINUED) CLASSES 2 AND 3, MINOR DIAMETER TOLERANCES FOR INTERNAL SPECIAL THREADS (NS SERIES)

Basic Major (Nominal) Diameter															Threads Per Inch
0.344	0.406	0.469	0.531	0.594	0.656	0.719	0.781	0.844	0.906	0.969	1.031	1.500	All larger diameters	4.5	
0.406	0.469	0.531	0.594	0.656	0.719	0.781	0.844	0.906	0.969	1.031	1.500	2.5			
0.0013	0.0013	—	—	—	—	—	—	—	—	—	—	—	—	—	80
0.0020	0.0020	—	—	—	—	—	—	—	—	—	—	—	—	—	
0.0026	0.0026	—	—	—	—	—	—	—	—	—	—	—	—	—	
0.0033	0.0033	—	—	—	—	—	—	—	—	—	—	—	—	—	
0.0013	0.0013	0.0013	0.0014	0.0014	0.0015	0.0015	—	—	—	—	—	—	—	Same as respective pitch diameter tolerances for each class, but not less than values in preceding column	72
0.0020	0.0020	0.0020	0.0021	0.0022	0.0022	0.0023	—	—	—	—	—	—	—		
0.0027	0.0027	0.0027	0.0028	0.0029	0.0030	0.0031	—	—	—	—	—	—	—		
0.0034	0.0034	0.0034	0.0039	0.0042	0.0042	0.0042	—	—	—	—	—	—	—		
0.0014	0.0014	0.0014	0.0014	0.0014	0.0015	0.0015	0.0016	0.0016	0.0017	0.0017	0.0018	—	—		64
0.0021	0.0021	0.0021	0.0021	0.0022	0.0022	0.0023	0.0024	0.0025	0.0025	0.0025	0.0026	—	—		
0.0028	0.0028	0.0028	0.0028	0.0029	0.0030	0.0031	0.0032	0.0033	0.0034	0.0034	0.0035	—	—		
0.0044	0.0044	0.0044	0.0044	0.0047	0.0047	0.0047	0.0050	0.0050	0.0050	0.0050	0.0052	—	—		
0.0015	0.0015	0.0015	0.0015	0.0016	0.0016	0.0016	0.0016	0.0017	0.0018	0.0018	0.0020	—	—		56
0.0023	0.0023	0.0023	0.0023	0.0023	0.0024	0.0024	0.0025	0.0025	0.0026	0.0027	0.0031	—	—		
0.0030	0.0030	0.0030	0.0030	0.0031	0.0032	0.0032	0.0033	0.0034	0.0035	0.0036	0.0041	—	—		
0.0046	0.0046	0.0046	0.0049	0.0049	0.0052	0.0052	0.0056	0.0056	0.0056	0.0056	0.0056	—	—		
0.0016	0.0016	0.0016	0.0016	0.0016	0.0018	0.0018	0.0020	0.0020	0.0020	0.0020	0.0022	0.0022	—		48
0.0024	0.0024	0.0024	0.0024	0.0024	0.0028	0.0028	0.0029	0.0029	0.0029	0.0029	0.0033	0.0033	—		
0.0032	0.0032	0.0034	0.0037	0.0037	0.0037	0.0037	0.0039	0.0039	0.0039	0.0039	0.0044	0.0044	—		
0.0048	0.0048	0.0048	0.0051	0.0051	0.0057	0.0057	0.0059	0.0062	0.0062	0.0062	0.0062	0.0062	—		
0.0019	0.0019	0.0019	0.0019	0.0019	0.0019	0.0019	0.0019	0.0019	0.0019	0.0020	0.0022	0.0024	—		40
0.0029	0.0029	0.0029	0.0029	0.0029	0.0029	0.0029	0.0029	0.0029	0.0029	0.0031	0.0034	0.0036	—		
0.0039	0.0039	0.0039	0.0039	0.0039	0.0039	0.0039	0.0041	0.0041	0.0041	0.0041	0.0045	0.0048	—		
0.0049	0.0049	0.0051	0.0054	0.0054	0.0057	0.0057	0.0062	0.0068	0.0068	0.0068	0.0068	0.0068	—		
0.0022	0.0022	0.0022	0.0022	0.0022	0.0022	0.0022	0.0022	0.0022	0.0022	0.0022	0.0023	0.0025	0.0025		36
0.0032	0.0032	0.0032	0.0032	0.0032	0.0032	0.0032	0.0032	0.0032	0.0032	0.0032	0.0035	0.0038	0.0038		
0.0043	0.0043	0.0043	0.0043	0.0043	0.0043	0.0043	0.0043	0.0043	0.0043	0.0043	0.0046	0.0050	0.0050		
0.0054	0.0054	0.0054	0.0057	0.0057	0.0057	0.0057	0.0065	0.0070	0.0070	0.0070	0.0072	0.0072	0.0072		
0.0024	0.0024	0.0024	0.0024	0.0024	0.0024	0.0024	0.0024	0.0024	0.0024	0.0024	0.0024	0.0027	0.0027		32
0.0037	0.0037	0.0037	0.0037	0.0037	0.0037	0.0037	0.0037	0.0037	0.0037	0.0037	0.0037	0.0041	0.0041		
0.0049	0.0049	0.0049	0.0049	0.0049	0.0049	0.0049	0.0049	0.0049	0.0049	0.0049	0.0054	0.0054	0.0054		
0.0061	0.0061	0.0061	0.0061	0.0061	0.0061	0.0061	0.0065	0.0070	0.0070	0.0070	0.0076	0.0076	0.0076		
0.0028	0.0028	0.0028	0.0028	0.0028	0.0028	0.0028	0.0028	0.0028	0.0028	0.0028	0.0028	0.0028	0.0031		28
0.0042	0.0042	0.0042	0.0042	0.0042	0.0042	0.0042	0.0042	0.0042	0.0042	0.0042	0.0042	0.0042	0.0046		
0.0056	0.0056	0.0056	0.0056	0.0056	0.0056	0.0056	0.0056	0.0056	0.0056	0.0056	0.0056	0.0062	0.0062		
0.0070	0.0070	0.0070	0.0070	0.0070	0.0070	0.0070	0.0070	0.0070	0.0070	0.0070	0.0079	0.0086	0.0086		
0.0032	0.0032	0.0032	0.0032	0.0032	0.0032	0.0032	0.0032	0.0032	0.0032	0.0032	0.0032	0.0032	0.0033		24
0.0049	0.0049	0.0049	0.0049	0.0049	0.0049	0.0049	0.0049	0.0049	0.0049	0.0049	0.0049	0.0049	0.0049		
0.0065	0.0065	0.0065	0.0065	0.0065	0.0065	0.0065	0.0065	0.0065	0.0065	0.0065	0.0065	0.0065	0.0066		
0.0081	0.0081	0.0081	0.0081	0.0081	0.0081	0.0081	0.0081	0.0081	0.0081	0.0081	0.0081	0.0089	0.0092		

UNIFIED AND AMERICAN SCREW THREADS - APPENDIX G

TABLE 31 (CONTINUED) CLASSES 2 AND 3, MINOR DIAMETER TOLERANCES FOR INTERNAL SPECIAL THREADS (NS SERIES)

Threads Per Inch	Length of Engagement in Terms of Diameter[a]		Basic Major (Nominal) Diameter[b]											
	Over →		0.053	0.066	0.079	0.092	0.105	0.118	0.131	0.151	0.177	0.203	0.233	0.281
		To → (Incl.)	0.066	0.079	0.092	0.105	0.118	0.131	0.151	0.177	0.203	0.233	0.281	0.344
20	—	⅓ D	—	—	—	—	—	—	—	—	—	—	0.0050	0.0044
	⅓ D	⅔ D	—	—	—	—	—	—	—	—	—	—	0.0076	0.0066
	⅔ D	1½ D	—	—	—	—	—	—	—	—	—	—	0.0101	0.0088
	1½ D	3 D	—	—	—	—	—	—	—	—	—	—	0.0126	0.0110
18	—	⅓ D	—	—	—	—	—	—	—	—	—	—	—	0.0052
	⅓ D	⅔ D	—	—	—	—	—	—	—	—	—	—	—	0.0078
	⅔ D	1½ D	—	—	—	—	—	—	—	—	—	—	—	0.0104
	1½ D	3 D	—	—	—	—	—	—	—	—	—	—	—	0.0130
16	—	⅓ D	—	—	—	—	—	—	—	—	—	—	—	—
	⅓ D	⅔ D	—	—	—	—	—	—	—	—	—	—	—	—
	⅔ D	1½ D	—	—	—	—	—	—	—	—	—	—	—	—
	1½ D	3 D	—	—	—	—	—	—	—	—	—	—	—	—
14	—	⅓ D	—	—	—	—	—	—	—	—	—	—	—	—
	⅓ D	⅔ D	—	—	—	—	—	—	—	—	—	—	—	—
	⅔ D	1½ D	—	—	—	—	—	—	—	—	—	—	—	—
	1½ D	3 D	—	—	—	—	—	—	—	—	—	—	—	—
12	—	⅓ D	—	—	—	—	—	—	—	—	—	—	—	—
	⅓ D	⅔ D	—	—	—	—	—	—	—	—	—	—	—	—
	⅔ D	1½ D	—	—	—	—	—	—	—	—	—	—	—	—
	1½ D	3 D	—	—	—	—	—	—	—	—	—	—	—	—
10	—	⅓ D	—	—	—	—	—	—	—	—	—	—	—	—
	⅓ D	⅔ D	—	—	—	—	—	—	—	—	—	—	—	—
	⅔ D	1½ D	—	—	—	—	—	—	—	—	—	—	—	—
	1½ D	3 D	—	—	—	—	—	—	—	—	—	—	—	—
8	—	⅓ D	—	—	—	—	—	—	—	—	—	—	—	—
	⅓ D	⅔ D	—	—	—	—	—	—	—	—	—	—	—	—
	⅔ D	1½ D	—	—	—	—	—	—	—	—	—	—	—	—
	1½ D	3 D	—	—	—	—	—	—	—	—	—	—	—	—
7	—	⅓ D	—	—	—	—	—	—	—	—	—	—	—	—
	⅓ D	⅔ D	—	—	—	—	—	—	—	—	—	—	—	—
	⅔ D	1½ D	—	—	—	—	—	—	—	—	—	—	—	—
	1½ D	3 D	—	—	—	—	—	—	—	—	—	—	—	—
6	—	⅓ D	—	—	—	—	—	—	—	—	—	—	—	—
	⅓ D	⅔ D	—	—	—	—	—	—	—	—	—	—	—	—
	⅔ D	1½ D	—	—	—	—	—	—	—	—	—	—	—	—
	1½ D	3 D	—	—	—	—	—	—	—	—	—	—	—	—
4	—	⅓ D	—	—	—	—	—	—	—	—	—	—	—	—
	⅓ D	⅔ D	—	—	—	—	—	—	—	—	—	—	—	—
	⅔ D	1½ D	—	—	—	—	—	—	—	—	—	—	—	—
	1½ D	3 D	—	—	—	—	—	—	—	—	—	—	—	—

NOTE: If the minor diameter tolerance as selected from this table is less than the pitch diameter tolerance, use the latter. See Limitations of Design, Appendix F.

a Tolerances for lengths of engagement in terms of pitch should be selected from equivalent lengths of engagement in terms of diameter ranges.

b Basic major (nominal) diameter ranges are based on the nominal diameter of number and fractional sizes.

UNIFIED AND AMERICAN SCREW THREADS - APPENDIX G

TABLE 31 (CONTINUED) CLASSES 2 AND 3, MINOR DIAMETER TOLERANCES FOR INTERNAL SPECIAL THREADS (NS SERIES)

Basic Major (Nominal) Diameter															Threads Per Inch
0.344	0.406	0.469	0.531	0.594	0.656	0.719	0.781	0.844	0.906	0.969	1.031	1.500	All larger diameters	4.5	
0.406	0.469	0.531	0.594	0.656	0.719	0.781	0.844	0.906	0.969	1.031	1.500	2.5			
0.0037	0.0036	0.0036	0.0036	0.0036	0.0036	0.0036	0.0036	0.0036	0.0036	0.0036	0.0036	0.0036	0.0036	—	20
0.0056	0.0054	0.0054	0.0054	0.0054	0.0054	0.0054	0.0054	0.0054	0.0054	0.0054	0.0054	0.0054	0.0054	—	
0.0075	0.0072	0.0072	0.0072	0.0072	0.0072	0.0072	0.0072	0.0072	0.0072	0.0072	0.0072	0.0072	0.0072	—	
0.0094	0.0090	0.0090	0.0090	0.0090	0.0090	0.0090	0.0090	0.0090	0.0090	0.0102	0.0102	0.0102	0.0102	—	
0.0045	0.0039	0.0038	0.0038	0.0038	0.0038	0.0038	0.0038	0.0038	0.0038	0.0038	0.0038	0.0038	0.0038	—	18
0.0068	0.0058	0.0057	0.0057	0.0057	0.0057	0.0057	0.0057	0.0057	0.0057	0.0057	0.0057	0.0057	0.0057	—	
0.0091	0.0078	0.0076	0.0076	0.0076	0.0076	0.0076	0.0076	0.0076	0.0076	0.0076	0.0076	0.0076	0.0082	—	
0.0113	0.0097	0.0095	0.0095	0.0095	0.0095	0.0095	0.0095	0.0095	0.0095	0.0114	0.0114	0.0114	0.0114	—	
0.0055	0.0049	0.0042	0.0040	0.0040	0.0040	0.0040	0.0040	0.0040	0.0040	0.0040	0.0040	0.0040	0.0040	—	16
0.0083	0.0073	0.0063	0.0060	0.0060	0.0060	0.0060	0.0060	0.0060	0.0060	0.0060	0.0060	0.0060	0.0060	—	
0.0110	0.0097	0.0084	0.0080	0.0080	0.0080	0.0080	0.0080	0.0080	0.0080	0.0080	0.0080	0.0080	0.0085	—	
0.0138	0.0131	0.0114	0.0100	0.0100	0.0100	0.0100	0.0100	0.0100	0.0100	0.0115	0.0120	0.0123	0.0126	—	
—	0.0061	0.0055	0.0048	0.0042	0.0042	0.0042	0.0042	0.0042	0.0042	0.0042	0.0042	0.0042	0.0042	—	14
—	0.0092	0.0083	0.0072	0.0062	0.0062	0.0062	0.0062	0.0062	0.0062	0.0062	0.0062	0.0062	0.0062	—	
—	0.0123	0.0110	0.0096	0.0083	0.0083	0.0083	0.0083	0.0083	0.0083	0.0083	0.0096	0.0098	0.0098	—	
—	0.0154	0.0138	0.0120	0.0103	0.0103	0.0103	0.0103	0.0103	0.0103	0.0115	0.0127	0.0133	0.0139	—	
—	—	—	0.0065	0.0058	0.0052	0.0045	0.0045	0.0045	0.0045	0.0045	0.0045	0.0045	0.0045	—	12
—	—	—	0.0097	0.0087	0.0077	0.0067	0.0067	0.0067	0.0067	0.0067	0.0067	0.0067	0.0067	—	
—	—	—	0.0129	0.0116	0.0103	0.0090	0.0090	0.0090	0.0090	0.0090	0.0090	0.0098	0.0108	—	
—	—	—	0.0161	0.0145	0.0129	0.0112	0.0112	0.0112	0.0112	0.0127	0.0131	0.0137	0.0143	—	
—	—	—	—	—	0.0074	0.0068	0.0061	0.0054	0.0054	0.0054	0.0054	0.0054	0.0054	—	10
—	—	—	—	—	0.0111	0.0101	0.0092	0.0081	0.0081	0.0081	0.0081	0.0081	0.0081	—	
—	—	—	—	—	0.0148	0.0135	0.0122	0.0108	0.0108	0.0108	0.0108	0.0108	0.0112	—	
—	—	—	—	—	0.0185	0.0169	0.0152	0.0135	0.0135	0.0135	0.0135	0.0184	0.0184	—	
—	—	—	—	—	—	—	0.0094	0.0087	0.0081	0.0074	0.0063	0.0063	0.0063	—	8
—	—	—	—	—	—	—	0.0140	0.0130	0.0121	0.0111	0.0101	0.0101	0.0101	—	
—	—	—	—	—	—	—	0.0187	0.0174	0.0161	0.0148	0.0135	0.0135	0.0135	—	
—	—	—	—	—	—	—	0.0234	0.0218	0.0201	0.0180	0.0169	0.0195	0.0210	—	
—	—	—	—	—	—	—	—	—	0.0087	0.0084	0.0077	0.0077	0.0077	—	7
—	—	—	—	—	—	—	—	—	0.0131	0.0126	0.0116	0.0116	0.0116	—	
—	—	—	—	—	—	—	—	—	0.0175	0.0168	0.0154	0.0154	0.0154	—	
—	—	—	—	—	—	—	—	—	0.0218	0.0211	0.0192	0.0192	0.0192	—	
—	—	—	—	—	—	—	—	—	—	0.0090	0.0090	0.0090	0.0090	—	6
—	—	—	—	—	—	—	—	—	—	0.0135	0.0135	0.0135	0.0135	—	
—	—	—	—	—	—	—	—	—	—	0.0180	0.0180	0.0180	0.0180	—	
—	—	—	—	—	—	—	—	—	—	0.0226	0.0226	0.0226	0.0226	—	
—	—	—	—	—	—	—	—	—	—	—	0.0135	0.0135	0.0135	—	4
—	—	—	—	—	—	—	—	—	—	—	0.0203	0.0203	0.0203	—	
—	—	—	—	—	—	—	—	—	—	—	0.0270	0.0270	0.0270	—	
—	—	—	—	—	—	—	—	—	—	—	0.0337	0.0337	0.0337	—	

Same as respective pitch diameter tolerances for each class, but not less than values in preceding column

UNIFIED AND AMERICAN SCREW THREADS - APPENDIX H

INTERNAL THREAD MINOR DIAMETER TOLERANCES

The principal practical factors which govern internal thread minor-diameter tolerances are tapping difficulties, particularly tap breakage in the small sizes, availability of standard drill sizes in the medium and large sizes, and depth of engagement. Depth of engagement correlates with the stripping strength of the thread assembly, and thus also with the length of engagement. It also correlates with the tendency toward disengagement of the threads on one side when assembly is eccentric. The amount of possible eccentricity is one half of the sum of the pitch-diameter allowance and tolerance on both mating threads. For a given pitch, or height of thread, this sum increases with the diameter, and accordingly this factor would require a decrease in minor-diameter tolerance with increase in diameter. However, such decrease in tolerance often is not feasible without requiring special drill sizes; therefore, to be able to use as many as possible of the available standard drill sizes listed in ASA B5.12-1950, the minor-diameter tolerance for Classes 1B and 2B of a given pitch for 1/4 in. diameter and larger is constant, in accordance with a formula given in Appendix E. All formulas for minor-diameter tolerances are based on the use of materials of equal strength for screw or bolt and nut or tapped hole and a length of engagement equal to the nominal diameter. For general applications the tolerances derived from these formulas are suitable for lengths of engagement up to 1-1/2 diameters.

There may be applications where the lengths of engagement of the mating threads or the combinations of materials used for mating threads are such that the maximum tolerance may not provide the desired strength of the fastening. Experience has shown that for lengths of engagement less than 2/3 D (the minimum thickness of standard nuts) the minor-diameter tolerance may be reduced without causing tapping difficulties.

In other applications the length of engagement of mating threads may be long because of design considerations or the combination of materials used for mating threads. As the threads engaged increase in number, their depth of engagement may be shallower and still develop stripping strength greater than the external thread breaking strength. In these cases the maximum tolerance should be increased to reduce the possibility of tapping difficulties.

To reduce the number of minor-diameter tolerances to a practical minimum, tolerances for all recommended diameters, lengths of engagement, and selected pitches are given in Table 29 for Classes 1B and 2B, Table 30 for Class 3B, and in Table 31 for Classes 2 and 3.

In these tables, the tolerances for lengths of engagement less than 1/3 D are 1/2 the formula values. For lengths of engagement from 1/3 D to 2/3 D, the tolerances are 3/4 of the formula values; for lengths of engagement from 2/3 D to 1-1/2 D the tolerances are equal to the formula values; and for lengths of engagement over 1-1/2 D, the tolerances are 1-1/4 times the formula values. Where the tolerance value so computed is more than 0.394p, which corresponds to a resulting minimum thread height of 53%, the value is adjusted to equal 0.394p. See Appendix E for formulas.

Recommended hole size limits before threading derived from the above tolerances to provide for optimum strength of fastenings and tapping conditions are shown in Appendix I, Tables 32 and 33 for Classes 1B, 2B, and 3B. The hole size limits before threading, and the tolerances between them, are derived from the minimum and maximum minor diameters of the internal thread given in Tables 32 and 33, using the following rules: *

For the range to and including 1/3 D the minimum hole size will be equal to the minimum minor diameter of the internal thread and the maximum hole size will be larger by one-half the minor-diameter tolerance.

For the range from 1/3 D to 2/3 D the minimum and maximum hole sizes will each be one-quarter of the minor-diameter tolerance larger than the corresponding limits for the length of engagement to and including 1/3 D.

For the range from 2/3 D to 1-1/2 D the minimum hole size will be larger than the minimum minor diameter of the internal thread by one-half the minor-diameter tolerance and the maximum hole size will be equal to the maximum minor diameter.

For the range from 1-1/2 D to 3 D the minimum and maximum hole sizes will each be one-quarter of the minor-diameter tolerance of the internal thread larger than the corresponding limits for the 2/3 D to 1-1/2 D length of engagement.

From the foregoing it will be seen that the difference between limits in each range is the same and equal to one-half of the minor-diameter tolerance. This is a general rule. However, the minimum differences for sizes below 1/4 inch are equal to the minor-diameter tolerances given in Tables 29 and 30 for lengths of engagement to and including 1/3 D, and for lengths of engagement greater than 1/3 D and for sizes 1/4 inch and larger the values are adjusted so that the difference between limits is never less than 0.0040 in.

For diameter pitch combinations other than those given in this table, the tolerances given in Table 3, or the tolerance derived from the formula, should be similarly applied to determine the hole size limits.

Internal threads requiring modified minor diameters for lengths of engagement less than 2/3 D to develop the optimum strength of the fastening, or longer than 1-1/2 D to reduce tapping difficulties, should be designated in accordance with paragraphs in the standard on screw thread designation.

* In Table 32, for three place decimals, 5 in the fourth decimal place has been rounded to the next major number in the third decimal place.

UNIFIED AND AMERICAN SCREW THREADS-APPENDIX I

TABLE 32 - CLASSES 1B AND 2B, RECOMMENDED HOLE SIZE LIMITS BEFORE THREADING FOR DIFFERENT LENGTHS OF ENGAGEMENT UNC, UNF, UNEF, UN, NC, NF, NEF, N, AND SELECTED SIZES OF UNS AND NS SERIES (BASED ON TABLE 29)[a]

Nominal Size	Threads Per Inch	Unified and American Standard Internal Thread Minor Diameter				Length of Engagement							
						To and including 1/3D		Above 1/3D to 2/3D		Above 2/3D to 1-1/2D		Above 1-1/2D to 3D	
						RECOMMENDED HOLE SIZE							
		Min.	Per cent of Basic Thread Height[c]	Max.[b]	Per cent of Basic Thread Height[c]	Min.	Max.	Min.	Max.	Min.	Max.	Min.	Max.
0 (.060)	80	0.0465	83.1	0.0514	52.9	0.0465	0.0500	0.0479	0.0514	0.0479	0.0514	0.0479	0.0514
1 (.073)	64	0.0561	83.3	0.0623	52.7	0.0561	0.0599	0.0585	0.0623	0.0585	0.0623	0.0585	0.0623
1 (.073)	72	0.0580	83.1	0.0635	52.7	0.0580	0.0613	0.0596	0.0629	0.0602	0.0635	0.0602	0.0635
2 (.086)	56	0.0667	83.2	0.0737	53.0	0.0667	0.0705	0.0686	0.0724	0.0699	0.0737	0.0699	0.0737
2 (.086)	64	0.0691	83.3	0.0753	52.7	0.0691	0.0724	0.0707	0.0740	0.0720	0.0753	0.0720	0.0753
3 (.099)	48	0.0764	83.5	0.0845	53.6	0.0764	0.0804	0.0785	0.0825	0.0805	0.0845	0.0806	0.0846
3 (.099)	56	0.0797	83.2	0.0865	53.9	0.0797	0.0831	0.0814	0.0848	0.0831	0.0865	0.0833	0.0867
4 (.112)	40	0.0849	83.4	0.0939	55.7	0.0849	0.0894	0.0871	0.0916	0.0894	0.0939	0.0902	0.0947
4 (.112)	48	0.0894	83.5	0.0968	56.2	0.0894	0.0931	0.0912	0.0949	0.0931	0.0968	0.0939	0.0976
5 (.125)	40	0.0979	83.4	0.1062	57.9	0.0979	0.1020	0.1000	0.1041	0.1021	0.1062	0.1036	0.1077
5 (.125)	44	0.1004	83.3	0.1079	57.9	0.1004	0.1042	0.1023	0.1060	0.1042	0.1079	0.1060	0.1097
6 (.138)	32	0.104	83.8	0.114	59.1	0.104	0.109	0.107	0.112	0.109	0.114	0.112	0.117
6 (.138)	40	0.111	83.1	0.119	58.5	0.111	0.115	0.113	0.117	0.115	0.119	0.117	0.121
8 (.164)	32	0.130	83.8	0.139	61.6	0.130	0.134	0.132	0.137	0.135	0.139	0.137	0.141
8 (.164)	36	0.134	83.1	0.142	61.0	0.134	0.138	0.136	0.140	0.138	0.142	0.140	0.144
10 (.190)	24	0.145	83.1	0.156	62.8	0.145	0.150	0.148	0.153	0.150	0.156	0.153	0.159
10 (.190)	32	0.156	83.8	0.164	64.1	0.156	0.160	0.158	0.162	0.160	0.164	0.162	0.166
12 (.216)	24	0.171	83.1	0.181	64.7	0.171	0.176	0.174	0.179	0.176	0.181	0.179	0.184
12 (.216)	28	0.177	84.1	0.186	64.7	0.177	0.182	0.179	0.184	0.182	0.186	0.184	0.188
12 (.216)	32	0.182	83.8	0.190	64.1	0.182	0.186	0.184	0.188	0.186	0.190	0.188	0.192
1/4	20	0.196	83.1	0.207	66.2	0.196	0.202	0.199	0.204	0.202	0.207	0.204	0.210
1/4	28	0.211	84.1	0.220	64.7	0.211	0.216	0.213	0.218	0.216	0.220	0.218	0.222
1/4	32	0.216	83.8	0.224	64.1	0.216	0.220	0.218	0.222	0.220	0.224	0.222	0.226
1/4	36	0.220	83.1	0.227	66.5	0.220	0.224	0.222	0.226	0.223	0.227	0.225	0.229
5/16	18	0.252	83.8	0.265	65.8	0.252	0.259	0.255	0.262	0.259	0.265	0.262	0.268
5/16	24	0.267	84.1	0.277	65.6	0.267	0.272	0.270	0.275	0.272	0.277	0.275	0.280
5/16	32	0.279	82.5	0.286	65.3	0.279	0.283	0.281	0.285	0.282	0.286	0.284	0.288
5/16	36	0.282	84.5	0.289	65.1	0.282	0.286	0.284	0.288	0.285	0.289	0.287	0.291
3/8	16	0.307	83.8	0.321	66.5	0.307	0.314	0.311	0.318	0.314	0.321	0.318	0.325
3/8	24	0.330	83.1	0.340	64.7	0.330	0.335	0.333	0.338	0.335	0.340	0.338	0.343
3/8	32	0.341	83.8	0.349	64.1	0.341	0.345	0.343	0.347	0.345	0.349	0.347	0.351
3/8	36	0.345	83.1	0.352	63.7	0.345	0.349	0.347	0.351	0.349	0.352	0.350	0.354
7/16	14	0.360	83.5	0.376	66.3	0.360	0.368	0.364	0.372	0.368	0.376	0.372	0.380
7/16	20	0.383	83.9	0.395	65.4	0.383	0.389	0.386	0.392	0.389	0.395	0.392	0.398
7/16	28	0.399	83.0	0.407	65.7	0.399	0.403	0.401	0.405	0.403	0.407	0.405	0.409
1/2	12	0.410	83.1	0.428	66.5	0.410	0.419	0.415	0.424	0.419	0.428	0.424	0.433
1/2	13	0.417	83.1	0.434	66.1	0.417	0.426	0.421	0.430	0.426	0.434	0.430	0.438
1/2	20	0.446	83.1	0.457	66.2	0.446	0.452	0.449	0.454	0.452	0.457	0.454	0.460
1/2	28	0.461	84.1	0.470	64.7	0.461	0.466	0.463	0.468	0.466	0.470	0.468	0.472
9/16	12	0.472	83.6	0.490	67.0	0.472	0.481	0.476	0.486	0.481	0.490	0.486	0.495
9/16	18	0.502	83.8	0.515	65.8	0.502	0.509	0.505	0.512	0.509	0.515	0.512	0.518

a The differences between limits are equal to the minor diameter tolerances given in Table 29 for lengths of engagement to and including 1/3 D. However, the minimum values for lengths of engagement greater than 1/3 D in sizes 1/4 in., and larger are adjusted so that the difference between limits is never less than 0.0040 in. For diameter-pitch combinations other than those given in this table, the tolerances given in Table 29 should be similarly applied to determine hole size limits. See Appendix H.

b Based on a length of engagement equal to the nominal diameter.

c Based on values as rounded off in the preceding column.

UNIFIED AND AMERICAN SCREW THREADS-APPENDIX I

TABLE 32 (CONTINUED) CLASSES 1B AND 2B, RECOMMENDED HOLE SIZE LIMITS BEFORE THREADING FOR DIFFERENT LENGTHS OF ENGAGEMENT UNC, UNF, UNEF, UN, NC, NF, NEF, N, AND SELECTED SIZES OF UNS AND NS SERIES (BASED ON TABLE 29)[a]

Nominal Size	Threads Per Inch	Unified and American Standard Internal Thread Minor Diameter				Length of Engagement							
						To and including 1/3D		Above 1/3D to 2/3D		Above 2/3D to 1-1/2D		Above 1-1/2D to 3D	
						RECOMMENDED HOLE SIZE							
		Min.	Per cent of Basic Thread Height[c]	Max.[b]	Per cent of Basic Thread Height[c]	Min.	Max.	Min.	Max.	Min.	Max.	Min.	Max.
9/16	24	0.517	84.1	0.527	65.6	0.517	0.522	0.520	0.525	0.522	0.527	0.525	0.530
9/16	28	0.524	83.0	0.532	65.7	0.524	0.528	0.526	0.530	0.528	0.532	0.530	0.534
5/8	11	0.527	83.0	0.546	67.0	0.527	0.537	0.532	0.541	0.537	0.546	0.541	0.551
5/8	12	0.535	83.1	0.553	66.5	0.535	0.544	0.540	0.549	0.544	0.553	0.549	0.558
5/8	18	0.565	83.1	0.578	65.1	0.565	0.572	0.568	0.575	0.572	0.578	0.575	0.581
5/8	24	0.580	83.1	0.590	64.7	0.580	0.585	0.583	0.588	0.585	0.590	0.588	0.593
5/8	28	0.586	84.1	0.595	64.1	0.586	0.591	0.588	0.593	0.591	0.595	0.593	0.597
11/16	12	0.597	83.6	0.615	67.0	0.597	0.606	0.602	0.611	0.606	0.615	0.611	0.620
11/16	24	0.642	84.1	0.652	65.6	0.642	0.647	0.645	0.650	0.647	0.652	0.650	0.655
3/4	10	0.642	83.1	0.663	67.0	0.642	0.653	0.647	0.658	0.653	0.663	0.658	0.668
3/4	12	0.660	83.1	0.678	66.5	0.660	0.669	0.665	0.674	0.669	0.678	0.674	0.683
3/4	16	0.682	83.8	0.696	66.5	0.682	0.689	0.686	0.693	0.689	0.696	0.693	0.700
3/4	20	0.696	83.1	0.707	66.2	0.696	0.702	0.699	0.704	0.702	0.707	0.704	0.710
3/4	28	0.711	84.1	0.720	64.7	0.711	0.716	0.713	0.718	0.716	0.720	0.718	0.722
13/16	12	0.722	83.6	0.740	67.0	0.722	0.731	0.727	0.736	0.731	0.740	0.736	0.745
13/16	16	0.745	83.1	0.759	65.9	0.745	0.752	0.749	0.756	0.752	0.759	0.756	0.763
13/16	20	0.758	83.9	0.770	65.4	0.758	0.764	0.761	0.767	0.764	0.770	0.767	0.773
7/8	9	0.755	83.1	0.778	67.2	0.755	0.767	0.761	0.772	0.767	0.778	0.772	0.784
7/8	12	0.785	83.1	0.803	66.5	0.785	0.794	0.790	0.799	0.794	0.803	0.799	0.808
7/8	14	0.798	83.0	0.814	65.7	0.798	0.806	0.802	0.810	0.806	0.814	0.810	0.818
7/8	16	0.807	83.8	0.821	66.5	0.807	0.814	0.811	0.818	0.814	0.821	0.818	0.825
7/8	20	0.821	83.1	0.832	66.2	0.821	0.827	0.824	0.829	0.827	0.832	0.829	0.835
7/8	28	0.836	84.1	0.845	64.7	0.836	0.841	0.838	0.843	0.841	0.845	0.843	0.847
15/16	12	0.847	83.6	0.865	67.0	0.847	0.856	0.852	0.861	0.856	0.865	0.861	0.870
15/16	16	0.870	83.1	0.884	65.9	0.870	0.877	0.874	0.881	0.877	0.884	0.881	0.888
15/16	20	0.883	83.9	0.895	65.4	0.883	0.889	0.886	0.892	0.889	0.895	0.892	0.898
1	8	0.865	83.1	0.890	67.7	0.865	0.878	0.871	0.884	0.878	0.890	0.884	0.896
1	12	0.910	83.1	0.928	66.5	0.910	0.919	0.915	0.924	0.919	0.928	0.924	0.933
1	14	0.923	83.0	0.938	66.8	0.923	0.931	0.927	0.934	0.931	0.938	0.934	0.942
1	16	0.932	83.8	0.946	66.5	0.932	0.939	0.936	0.943	0.939	0.946	0.943	0.950
1	20	0.946	83.1	0.957	66.2	0.946	0.952	0.949	0.954	0.952	0.957	0.954	0.960
1	28	0.961	84.1	0.970	64.7	0.961	0.966	0.963	0.968	0.966	0.970	0.968	0.972
1-1/16	12	0.972	83.8	0.990	67.0	0.972	0.981	0.977	0.986	0.981	0.990	0.986	0.995
1-1/16	16	0.995	83.1	1.009	65.9	0.995	1.002	0.999	1.006	1.002	1.009	1.006	1.013
1-1/16	18	1.002	83.8	1.015	68.8	1.002	1.009	1.005	1.012	1.009	1.015	1.012	1.018
1-1/8	7	0.970	83.5	0.998	68.4	0.970	0.984	0.977	0.991	0.984	0.998	0.991	1.005
1-1/8	8	0.990	83.1	1.015	67.7	0.990	1.003	0.996	1.009	1.003	1.015	1.009	1.021
1-1/8	12	1.035	83.1	1.053	66.5	1.035	1.044	1.040	1.049	1.044	1.053	1.049	1.058
1-1/8	16	1.057	83.8	1.071	66.5	1.057	1.064	1.061	1.068	1.064	1.071	1.068	1.075
1-1/8	18	1.065	83.1	1.078	65.1	1.065	1.072	1.068	1.075	1.072	1.078	1.075	1.081
1-1/8	20	1.071	83.1	1.082	66.2	1.071	1.077	1.074	1.079	1.077	1.082	1.079	1.085
1-1/8	28	1.086	84.1	1.095	64.7	1.086	1.091	1.088	1.093	1.091	1.095	1.093	1.097

a The differences between limits are equal to the minor diameter tolerances given in Table 29 for lengths of engagement to and including 1/3 D. However, the minimum values for lengths of engagement greater than 1/3 D in sizes 1/4 in., and larger are adjusted so that the difference between limits is never less than 0.0040 in. For diameter-pitch combinations other than those given in this table, the tolerances given in Table 29 should be similarly applied to determine hole size limits. See Appendix H.

b Based on a length of engagement equal to the nominal diameter.

c Based on values as rounded off in the preceding column.

UNIFIED AND AMERICAN SCREW THREADS-APPENDIX I

TABLE 32 (CONTINUED) CLASSES 1B AND 2B, RECOMMENDED HOLE SIZE LIMITS BEFORE THREADING FOR DIFFERENT LENGTHS OF ENGAGEMENT UNC, UNF, UNEF, UN, NC, NF, NEF, N, AND SELECTED SIZES OF UNS AND NS SERIES (BASED ON TABLE 29)[a]

Nominal Size	Threads Per Inch	Unified and American Standard Internal Thread Minor Diameter				Length of Engagement							
						To and including 1/3D		Above 1/3D to 2/3D		Above 2/3D to 1-1/2D		Above 1-1/2D to 3D	
						RECOMMENDED HOLE SIZE							
		Min.	Per cent of Basic Thread Height[c]	Max.[b]	Per cent of Basic Thread Height[c]	Min.	Max.	Min.	Max.	Min.	Max.	Min.	Max.
1-3/16	12	1.097	83.6	1.115	67.0	1.097	1.106	1.102	1.111	1.106	1.115	1.111	1.120
1-3/16	16	1.120	83.1	1.134	65.9	1.120	1.127	1.124	1.131	1.127	1.134	1.131	1.138
1-3/16	18	1.127	83.8	1.140	65.8	1.127	1.134	1.130	1.137	1.134	1.140	1.137	1.143
1-1/4	7	1.095	83.5	1.123	68.4	1.095	1.109	1.102	1.116	1.109	1.123	1.116	1.130
1-1/4	8	1.115	83.1	1.140	67.7	1.115	1.128	1.121	1.134	1.128	1.140	1.134	1.146
1-1/4	12	1.160	83.1	1.178	66.5	1.160	1.169	1.165	1.174	1.169	1.178	1.174	1.183
1-1/4	16	1.182	83.8	1.196	66.5	1.182	1.189	1.186	1.193	1.189	1.196	1.193	1.200
1-1/4	18	1.190	83.1	1.203	65.1	1.190	1.197	1.193	1.200	1.197	1.203	1.200	1.206
1-1/4	20	1.196	83.1	1.207	66.2	1.196	1.202	1.199	1.204	1.202	1.207	1.204	1.210
1-5/16	12	1.222	83.6	1.240	67.0	1.222	1.231	1.227	1.236	1.231	1.240	1.236	1.245
1-5/16	16	1.245	83.1	1.259	65.9	1.245	1.252	1.249	1.256	1.252	1.259	1.256	1.263
1-5/16	18	1.252	83.8	1.265	65.8	1.252	1.259	1.255	1.262	1.259	1.265	1.262	1.268
1-3/8	6	1.195	83.1	1.225	69.3	1.195	1.210	1.203	1.218	1.210	1.225	1.218	1.233
1-3/8	8	1.240	83.1	1.265	67.7	1.240	1.253	1.246	1.259	1.253	1.265	1.259	1.271
1-3/8	12	1.285	83.1	1.303	66.5	1.285	1.294	1.290	1.299	1.294	1.303	1.299	1.308
1-3/8	16	1.307	83.8	1.321	66.5	1.307	1.314	1.311	1.318	1.314	1.321	1.318	1.325
1-3/8	18	1.315	83.1	1.328	65.1	1.315	1.322	1.318	1.325	1.322	1.328	1.325	1.331
1-7/16	12	1.347	83.6	1.365	67.0	1.347	1.356	1.352	1.361	1.356	1.365	1.361	1.370
1-7/16	16	1.370	83.1	1.384	65.9	1.370	1.377	1.374	1.381	1.377	1.384	1.381	1.388
1-7/16	18	1.377	83.8	1.390	65.8	1.377	1.384	1.380	1.387	1.384	1.390	1.387	1.393
1-1/2	6	1.320	83.1	1.350	69.3	1.320	1.335	1.328	1.343	1.335	1.350	1.343	1.358
1-1/2	8	1.365	83.1	1.390	67.7	1.365	1.378	1.371	1.384	1.378	1.390	1.384	1.396
1-1/2	12	1.410	83.1	1.428	66.5	1.410	1.419	1.415	1.424	1.419	1.428	1.424	1.433
1-1/2	16	1.432	83.8	1.446	66.5	1.432	1.439	1.436	1.443	1.439	1.446	1.443	1.450
1-1/2	18	1.440	83.1	1.453	66.5	1.440	1.447	1.443	1.450	1.447	1.453	1.450	1.456
1-1/2	20	1.446	83.1	1.457	66.2	1.446	1.452	1.449	1.454	1.452	1.457	1.454	1.460
1-9/16	16	1.495	83.1	1.509	65.9	1.495	1.502	1.499	1.506	1.502	1.509	1.506	1.513
1-9/16	18	1.502	83.8	1.515	65.8	1.502	1.509	1.505	1.512	1.509	1.515	1.512	1.518
1-5/8	8	1.490	83.1	1.515	67.7	1.490	1.503	1.496	1.509	1.503	1.515	1.509	1.521
1-5/8	12	1.535	83.1	1.553	66.5	1.535	1.544	1.540	1.549	1.544	1.553	1.549	1.558
1-5/8	16	1.557	83.8	1.571	66.5	1.557	1.564	1.561	1.568	1.564	1.571	1.568	1.575
1-5/8	18	1.565	83.1	1.578	65.1	1.565	1.572	1.568	1.575	1.572	1.578	1.575	1.581
1-11/16	16	1.620	83.1	1.634	65.9	1.620	1.627	1.624	1.631	1.627	1.634	1.631	1.638
1-11/16	18	1.627	83.8	1.640	65.8	1.627	1.634	1.630	1.637	1.634	1.640	1.637	1.643
1-3/4	5	1.534	83.1	1.568	70.1	1.534	1.551	1.543	1.560	1.551	1.568	1.560	1.577
1-3/4	8	1.615	83.1	1.640	67.7	1.615	1.628	1.621	1.634	1.628	1.640	1.634	1.646
1-3/4	12	1.660	83.1	1.678	66.5	1.660	1.669	1.665	1.674	1.669	1.678	1.674	1.683
1-3/4	16	1.682	83.8	1.696	66.5	1.682	1.689	1.686	1.693	1.689	1.696	1.693	1.700
1-3/4	20	1.696	83.1	1.707	66.2	1.696	1.702	1.699	1.704	1.702	1.707	1.704	1.710
1-13/16	16	1.745	83.1	1.759	65.9	1.745	1.752	1.749	1.756	1.752	1.759	1.756	1.763

a The differences between limits are equal to the minor diameter tolerances given in Table 29 for lengths of engagement to and including 1/3 D. However, the minimum values for lengths of engagement greater than 1/3 D in sizes 1/4 in., and larger are adjusted so that the difference between limits is never less than 0.0040 in. For diameter-pitch combinations other than those given in this table, the tolerances given in Table 29 should be similarly applied to determine hole size limits. See Appendix H.

b Based on a length of engagement equal to the nominal diameter.

c Based on values as rounded off in the preceding column.

UNIFIED AND AMERICAN SCREW THREADS-APPENDIX I

TABLE 32 (CONTINUED) CLASSES 1B AND 2B, RECOMMENDED HOLE SIZE LIMITS BEFORE THREADING FOR DIFFERENT LENGTHS OF ENGAGEMENT UNC, UNF, UNEF, UN, NC, NF, NEF, N, AND SELECTED SIZES OF UNS AND NS SERIES (BASED ON TABLE 29)[a]

Nominal Size	Threads Per Inch	Unified and American Standard Internal Thread Minor Diameter				Length of Engagement							
						To and including 1/3D		Above 1/3D to 2/3D		Above 2/3D to 1-1/2D		Above 1-1/2D to 3D	
						RECOMMENDED HOLE SIZE							
		Min.	Per cent of Basic Thread Height[c]	Max.[b]	Per cent of Basic Thread Height[c]	Min.	Max.	Min.	Max.	Min.	Max.	Min.	Max.
1-7/8	8	1.740	83.1	1.765	67.7	1.740	1.753	1.746	1.759	1.753	1.765	1.759	1.771
1-7/8	12	1.785	83.1	1.803	66.5	1.785	1.794	1.790	1.799	1.794	1.803	1.799	1.808
1-7/8	16	1.807	83.8	1.821	66.5	1.807	1.814	1.811	1.818	1.814	1.821	1.818	1.825
1-15/16	16	1.870	83.1	1.884	65.9	1.870	1.877	1.874	1.881	1.877	1.884	1.881	1.888
2	4½	1.759	83.5	1.795	71.0	1.759	1.777	1.768	1.786	1.777	1.795	1.786	1.804
2	8	1.865	83.1	1.890	67.7	1.865	1.878	1.871	1.884	1.878	1.890	1.884	1.896
2	12	1.910	83.1	1.928	66.5	1.910	1.919	1.915	1.924	1.919	1.928	1.924	1.933
2	16	1.932	83.8	1.946	66.5	1.932	1.939	1.936	1.943	1.939	1.946	1.943	1.950
2	20	1.946	83.1	1.957	66.2	1.946	1.952	1.949	1.954	1.952	1.957	1.954	1.960
2-1/16	16	1.995	83.1	2.009	65.9	1.995	2.002	1.999	2.006	2.002	2.009	2.006	2.013
2-1/8	8	1.990	83.1	2.015	67.7	1.990	2.003	1.996	2.009	2.003	2.015	2.009	2.021
2-1/8	12	2.035	83.1	2.053	66.5	2.035	2.044	2.040	2.049	2.044	2.053	2.049	2.058
2-1/8	16	2.057	83.8	2.071	66.5	2.057	2.064	2.061	2.068	2.064	2.071	2.068	2.075
2-3/16	16	2.120	83.1	2.134	65.9	2.120	2.127	2.124	2.131	2.127	2.134	2.131	2.138
2-1/4	4½	2.009	83.5	2.045	71.0	2.009	2.027	2.018	2.036	2.027	2.045	2.036	2.054
2-1/4	8	2.115	83.1	2.140	67.7	2.115	2.128	2.121	2.134	2.128	2.140	2.134	2.146
2-1/4	12	2.160	83.1	2.178	66.5	2.160	2.169	2.165	2.174	2.169	2.178	2.174	2.183
2-1/4	16	2.182	83.8	2.196	66.5	2.182	2.189	2.186	2.193	2.189	2.196	2.193	2.200
2-1/4	20	2.196	83.1	2.207	66.2	2.196	2.202	2.199	2.204	2.202	2.207	2.204	2.210
2-5/16	16	2.245	83.1	2.259	65.9	2.245	2.252	2.249	2.256	2.252	2.259	2.256	2.263
2-3/8	12	2.285	83.1	2.303	66.5	2.285	2.294	2.290	2.299	2.294	2.303	2.299	2.308
2-3/8	16	2.307	83.8	2.321	66.5	2.307	2.314	2.311	2.318	2.314	2.321	2.318	2.325
2-7/16	16	2.370	83.1	2.384	65.9	2.370	2.377	2.374	2.381	2.377	2.384	2.381	2.388
2-1/2	4	2.229	83.4	2.267	71.7	2.229	2.248	2.239	2.258	2.248	2.267	2.258	2.277
2-1/2	8	2.365	83.1	2.390	67.7	2.365	2.378	2.371	2.384	2.378	2.390	2.384	2.396
2-1/2	12	2.410	83.1	2.428	66.5	2.410	2.419	2.415	2.424	2.419	2.428	2.424	2.433
2-1/2	16	2.432	83.8	2.446	66.5	2.432	2.439	2.436	2.443	2.439	2.446	2.443	2.450
2-1/2	20	2.446	83.1	2.457	66.2	2.446	2.452	2.449	2.454	2.452	2.457	2.454	2.460
2-5/8	12	2.535	83.1	2.553	66.5	2.535	2.544	2.540	2.549	2.544	2.553	2.549	2.558
2-5/8	16	2.557	83.8	2.571	66.5	2.557	2.564	2.561	2.568	2.564	2.571	2.568	2.575
2-3/4	4	2.479	83.4	2.517	71.7	2.479	2.498	2.489	2.508	2.498	2.517	2.508	2.527
2-3/4	8	2.615	83.1	2.640	67.7	2.615	2.628	2.621	2.634	2.628	2.640	2.634	2.646
2-3/4	12	2.660	83.1	2.678	66.5	2.660	2.669	2.665	2.674	2.669	2.678	2.674	2.683
2-3/4	16	2.682	83.8	2.696	66.5	2.682	2.689	2.686	2.693	2.689	2.696	2.693	2.700
2-7/8	12	2.785	83.1	2.803	66.5	2.785	2.794	2.790	2.799	2.794	2.803	2.799	2.808
2-7/8	16	2.807	83.8	2.821	66.5	2.807	2.814	2.811	2.818	2.814	2.821	2.818	2.825
3	4	2.729	83.4	2.767	71.7	2.729	2.748	2.739	2.758	2.748	2.767	2.758	2.777

a The differences between limits are equal to the minor diameter tolerances given in Table 29 for lengths of engagement to and including 1/3 D. However, the minimum values for lengths of engagement greater than 1/3 D in sizes 1/4 in., and larger are adjusted so that the difference between limits is never less than 0.0040 in. For diameter-pitch combinations other than those given in this table, the tolerances given in Table 29 should be similarly applied to determine hole size limits. See Appendix H.

b Based on a length of engagement equal to the nominal diameter.

c Based on values as rounded off in the preceding column.

UNIFIED AND AMERICAN SCREW THREADS-APPENDIX I

TABLE 32 (CONTINUED) CLASSES 1B AND 2B, RECOMMENDED HOLE SIZE LIMITS BEFORE THREADING FOR DIFFERENT LENGTHS OF ENGAGEMENT UNC, UNF, UNEF, UN, NC, NF, NEF, N, AND SELECTED SIZES OF UNS AND NS SERIES (BASED ON TABLE 29)[a]

Nominal Size	Threads Per Inch	Unified and American Standard Internal Thread Minor Diameter				Length of Engagement							
						To and including 1/3D		Above 1/3D to 2/3D		Above 2/3D to 1-1/2D		Above 1-1/2D to 3D	
		Min.	Per cent of Basic Thread Height[c]	Max.[b]	Per cent of Basic Thread Height[c]	RECOMMENDED HOLE SIZE							
						Min.	Max.	Min.	Max.	Min.	Max.	Min.	Max.
3	8	2.865	83.1	2.890	67.7	2.865	2.878	2.871	2.884	2.878	2.890	2.884	2.896
3	12	2.910	83.1	2.928	66.5	2.910	2.919	2.915	2.924	2.919	2.928	2.924	2.933
3	16	2.932	83.8	2.946	66.5	2.932	2.939	2.936	2.943	2.939	2.946	2.943	2.950
3-1/8	12	3.035	83.1	3.053	66.5	3.035	3.044	3.040	3.049	3.044	3.053	3.049	3.058
3-1/8	16	3.057	83.8	3.071	66.5	3.057	3.064	3.061	3.068	3.064	3.071	3.068	3.075
3-1/4	4	2.979	83.4	3.017	71.7	2.979	2.998	2.989	3.008	2.998	3.017	3.008	3.027
3-1/4	8	3.115	83.1	3.140	67.7	3.115	3.128	3.121	3.134	3.128	3.140	3.134	3.146
3-1/4	12	3.160	83.1	3.178	66.5	3.160	3.169	3.165	3.174	3.169	3.178	3.174	3.183
3-1/4	16	3.182	83.8	3.196	66.5	3.182	3.189	3.186	3.193	3.189	3.196	3.193	3.200
3-3/8	12	3.285	83.1	3.303	66.5	3.285	3.294	3.290	3.299	3.294	3.303	3.299	3.308
3-3/8	16	3.307	83.8	3.321	66.5	3.307	3.314	3.311	3.318	3.314	3.321	3.318	3.325
3-1/2	4	3.229	83.4	3.267	71.7	3.229	3.248	3.239	3.258	3.248	3.267	3.258	3.277
3-1/2	8	3.365	83.1	3.390	67.7	3.365	3.378	3.371	3.384	3.378	3.390	3.384	3.396
3-1/2	12	3.410	83.1	3.428	66.5	3.410	3.419	3.415	3.424	3.419	3.428	3.424	3.433
3-1/2	16	3.432	83.8	3.446	66.5	3.432	3.439	3.436	3.443	3.439	3.446	3.443	3.450
3-5/8	12	3.535	83.1	3.553	66.5	3.535	3.544	3.540	3.549	3.544	3.553	3.549	3.558
3-5/8	16	3.557	83.8	3.571	66.5	3.557	3.564	3.561	3.568	3.564	3.571	3.568	3.575
3-3/4	4	3.479	83.4	3.517	71.7	3.479	3.498	3.489	3.508	3.498	3.517	3.508	3.527
3-3/4	8	3.615	83.1	3.640	67.7	3.615	3.628	3.621	3.634	3.628	3.640	3.634	3.646
3-3/4	12	3.660	83.1	3.678	66.5	3.660	3.669	3.665	3.674	3.669	3.678	3.674	3.683
3-3/4	16	3.682	83.8	3.696	66.5	3.682	3.689	3.686	3.693	3.689	3.696	3.693	3.700
3-7/8	12	3.785	83.1	3.803	66.5	3.785	3.794	3.790	3.799	3.794	3.803	3.799	3.808
3-7/8	16	3.807	83.8	3.821	66.5	3.807	3.814	3.811	3.818	3.814	3.821	3.818	3.825
4	4	3.729	83.4	3.767	71.7	3.729	3.748	3.739	3.758	3.748	3.767	3.758	3.777
4	8	3.865	83.1	3.890	67.7	3.865	3.878	3.871	3.884	3.878	3.890	3.884	3.896
4	12	3.910	83.1	3.928	66.5	3.910	3.919	3.915	3.924	3.919	3.928	3.924	3.933
4	16	3.932	83.8	3.946	66.5	3.932	3.939	3.936	3.943	3.939	3.946	3.943	3.950
4-1/4	4	3.979	83.4	4.017	71.7	3.979	3.998	3.989	4.008	3.998	4.017	4.008	4.027
4-1/4	8	4.115	83.1	4.140	67.7	4.115	4.128	4.121	4.134	4.128	4.140	4.134	4.146
4-1/4	12	4.160	83.1	4.178	66.5	4.160	4.169	4.165	4.174	4.169	4.178	4.174	4.183
4-1/4	16	4.182	83.8	4.196	66.5	4.182	4.189	4.186	4.193	4.189	4.196	4.193	4.200
4-1/2	4	4.229	83.4	4.267	71.7	4.229	4.248	4.239	4.258	4.248	4.267	4.258	4.277
4-1/2	8	4.365	83.1	4.390	67.7	4.365	4.378	4.371	4.384	4.378	4.390	4.384	4.396
4-1/2	12	4.410	83.1	4.428	66.5	4.410	4.419	4.415	4.424	4.419	4.428	4.424	4.433
4-1/2	16	4.432	83.8	4.446	66.5	4.432	4.439	4.436	4.443	4.439	4.446	4.443	4.450
4-3/4	8	4.615	83.1	4.640	67.7	4.615	4.628	4.621	4.634	4.628	4.640	4.634	4.646
4-3/4	12	4.660	83.1	4.678	66.5	4.660	4.669	4.665	4.674	4.669	4.678	4.674	4.683
4-3/4	16	4.682	83.8	4.696	66.5	4.682	4.689	4.686	4.693	4.689	4.696	4.693	4.700

a The differences between limits are equal to the minor diameter tolerances given in Table 29 for lengths of engagement to and including 1/3 D. However, the minimum values for lengths of engagement greater than 1/3 D in sizes 1/4 in., and larger are adjusted so that the difference between limits is never less than 0.0040 in. For diameter-pitch combinations other than those given in this table, the tolerances given in Table 29 should be similarly applied to determine hole size limits. See Appendix H.

b Based on a length of engagement equal to the nominal diameter.

c Based on values as rounded off in the preceding column.

UNIFIED AND AMERICAN SCREW THREADS-APPENDIX I

TABLE 32 (CONTINUED) CLASSES 1B AND 2B, RECOMMENDED HOLE SIZE LIMITS BEFORE THREADING FOR DIFFERENT LENGTHS OF ENGAGEMENT UNC, UNF, UNEF, UN, NC, NF, NEF, N, AND SELECTED SIZES OF UNS AND NS SERIES (BASED ON TABLE 29)[a]

Nominal Size	Threads Per Inch	Unified and American Standard Internal Thread Minor Diameter				Length of Engagement							
						To and including 1/3D		Above 1/3D to 2/3D		Above 2/3D to 1-1/2D		Above 1-1/2D to 3D	
						RECOMMENDED HOLE SIZE							
		Min.	Per cent of Basic Thread Height[c]	Max.[b]	Per cent of Basic Thread Height[c]	Min.	Max.	Min.	Max.	Min.	Max.	Min.	Max.
5	8	4.865	83.1	4.890	67.7	4.865	4.878	4.871	4.884	4.878	4.890	4.884	4.896
5	12	4.910	83.1	4.928	66.5	4.910	4.919	4.915	4.924	4.919	4.928	4.924	4.933
5	16	4.932	83.8	4.946	66.5	4.932	4.939	4.936	4.943	4.939	4.946	4.943	4.950
5-1/4	8	5.115	83.1	5.140	67.7	5.115	5.128	5.121	5.134	5.128	5.140	5.134	5.146
5-1/4	12	5.160	83.1	5.178	66.5	5.160	5.169	5.165	5.174	5.169	5.178	5.174	5.183
5-1/4	16	5.182	83.8	5.196	66.5	5.182	5.189	5.186	5.193	5.189	5.196	5.193	5.200
5-1/2	8	5.365	83.1	5.390	67.7	5.365	5.378	5.371	5.384	5.378	5.390	5.384	5.396
5-1/2	12	5.410	83.1	5.428	66.5	5.410	5.419	5.415	5.424	5.419	5.428	5.424	5.433
5-1/2	16	5.432	83.8	5.446	66.5	5.432	5.439	5.436	5.443	5.439	5.446	5.443	5.450
5-3/4	8	5.615	83.1	5.640	67.7	5.615	5.628	5.621	5.634	5.628	5.640	5.634	5.646
5-3/4	12	5.660	83.1	5.678	66.5	5.660	5.669	5.665	5.674	5.669	5.678	5.674	5.683
5-3/4	16	5.682	83.8	5.696	66.5	5.682	5.689	5.686	5.693	5.689	5.696	5.693	5.700
6	8	5.865	83.1	5.890	67.7	5.865	5.878	5.871	5.884	5.878	5.890	5.884	5.896
6	12	5.910	83.1	5.928	66.5	5.910	5.919	5.915	5.924	5.919	5.928	5.924	5.933
6	16	5.932	83.8	5.946	66.5	5.932	5.939	5.936	5.943	5.939	5.946	5.943	5.950

a The differences between limits are equal to the minor diameter tolerances given in Table 29 for lengths of engagement to and including 1/3 D. However, the minimum values for lengths of engagement greater than 1/3 D in sizes 1/4 in., and larger are adjusted so that the difference between limits is never less than 0.0040 in. For diameter-pitch combinations other than those given in this table, the tolerances given in Table 29 should be similarly applied to determine hole size limits. See Appendix H.

b Based on a length of engagement equal to the nominal diameter.

c Based on values as rounded off in the preceding column.

UNIFIED AND AMERICAN SCREW THREADS-APPENDIX I

TABLE 33-CLASS 3B, RECOMMENDED HOLE SIZE LIMITS BEFORE THREADING FOR DIFFERENT LENGTHS OF ENGAGEMENT UNC, UNF, UNEF, UN, NC, NF, NEF, N, AND SELECTED SIZES OF UNS AND NS SERIES (BASED ON TABLE 30)[a]

Nominal Size	Threads Per Inch	Unified and American Standard Internal Thread Minor Diameter				Length of Engagement							
						To and including 1/3D		Above 1/3D to 2/3D		Above 2/3D to 1-1/2D		Above 1-1/2D to 3D	
						RECOMMENDED HOLE SIZE							
		Min.	Per cent of Basic Thread Height[c]	Max.[b]	Per cent of Basic Thread Height[c]	Min.	Max.	Min.	Max.	Min.	Max.	Min.	Max.
0 (.060)	80	0.0465	83.1	0.0514	52.9	0.0465	0.0500	0.0479	0.0514	0.0479	0.0514	0.0479	0.0514
1 (.073)	64	0.0561	83.3	0.0623	52.7	0.0561	0.0599	0.0585	0.0623	0.0585	0.0623	0.0585	0.0623
1 (.073)	72	0.0580	83.1	0.0635	52.7	0.0580	0.0613	0.0596	0.0629	0.0602	0.0635	0.0602	0.0635
2 (.086)	56	0.0667	83.2	0.0737	53.0	0.0667	0.0705	0.0686	0.0724	0.0699	0.0737	0.0699	0.0737
2 (.086)	64	0.0691	83.3	0.0753	52.7	0.0691	0.0724	0.0707	0.0740	0.0720	0.0753	0.0720	0.0753
3 (.099)	48	0.0764	83.5	0.0845	53.6	0.0764	0.0804	0.0785	0.0825	0.0805	0.0845	0.0806	0.0846
3 (.099)	56	0.0797	83.2	0.0865	53.9	0.0797	0.0831	0.0814	0.0848	0.0831	0.0865	0.0833	0.0867
4 (.112)	40	0.0849	83.4	0.0939	55.7	0.0849	0.0894	0.0871	0.0916	0.0894	0.0939	0.0902	0.0947
4 (.112)	48	0.0894	83.5	0.0968	56.2	0.0894	0.0931	0.0912	0.0949	0.0931	0.0968	0.0939	0.0976
5 (.125)	40	0.0979	83.4	0.1062	57.9	0.0979	0.1020	0.1000	0.1041	0.1021	0.1062	0.1036	0.1077
5 (.125)	44	0.1004	83.3	0.1079	57.9	0.1004	0.1042	0.1023	0.1060	0.1042	0.1079	0.1060	0.1097
6 (.138)	32	0.1042	83.3	0.1140	59.1	0.1042	0.1091	0.1066	0.1115	0.1091	0.1140	0.1115	0.1164
6 (.138)	40	0.1109	83.4	0.1186	59.7	0.1109	0.1148	0.1128	0.1167	0.1147	0.1186	0.1166	0.1205
8 (.164)	32	0.1302	83.3	0.1389	61.8	0.1302	0.1345	0.1324	0.1367	0.1346	0.1389	0.1367	0.1410
8 (.164)	36	0.1339	83.4	0.1416	62.1	0.1339	0.1377	0.1359	0.1397	0.1378	0.1416	0.1397	0.1435
10 (.190)	24	0.1449	83.3	0.1555	63.7	0.1449	0.1502	0.1475	0.1528	0.1502	0.1555	0.1528	0.1581
10 (.190)	32	0.1562	83.3	0.1641	63.8	0.1562	0.1601	0.1581	0.1621	0.1601	0.1641	0.1621	0.1661
12 (.216)	24	0.1709	83.3	0.1807	65.2	0.1709	0.1758	0.1733	0.1782	0.1758	0.1807	0.1782	0.1831
12 (.216)	28	0.1773	83.4	0.1857	65.3	0.1773	0.1815	0.1794	0.1836	0.1815	0.1857	0.1836	0.1878
12 (.216)	32	0.1822	83.3	0.1895	65.3	0.1822	0.1858	0.1837	0.1877	0.1855	0.1895	0.1873	0.1913
1/4	20	0.1959	83.3	0.2067	66.7	0.1959	0.2013	0.1986	0.2040	0.2013	0.2067	0.2040	0.2094
1/4	28	0.2113	83.4	0.2190	66.8	0.2113	0.2152	0.2131	0.2171	0.2150	0.2190	0.2169	0.2209
1/4	32	0.2162	83.3	0.2229	66.8	0.2162	0.2196	0.2172	0.2212	0.2189	0.2229	0.2206	0.2246
1/4	36	0.2199	83.4	0.2258	67.1	0.2199	0.2243	0.2199	0.2243	0.2214	0.2258	0.2229	0.2273
5/16	18	0.2524	83.3	0.2630	68.6	0.2524	0.2577	0.2551	0.2604	0.2577	0.2630	0.2604	0.2657
5/16	24	0.2674	83.3	0.2754	68.5	0.2674	0.2714	0.2694	0.2734	0.2714	0.2754	0.2734	0.2774
5/16	32	0.2787	83.3	0.2847	68.5	0.2787	0.2817	0.2792	0.2832	0.2807	0.2847	0.2822	0.2862
5/16	36	0.2824	83.4	0.2877	68.7	0.2824	0.2863	0.2824	0.2863	0.2837	0.2877	0.2850	0.2890
3/8	16	0.3073	83.4	0.3182	70.0	0.3073	0.3127	0.3101	0.3155	0.3128	0.3182	0.3155	0.3209
3/8	24	0.3299	83.3	0.3372	69.8	0.3299	0.3336	0.3314	0.3354	0.3332	0.3372	0.3351	0.3391
3/8	32	0.3412	83.3	0.3469	69.2	0.3412	0.3441	0.3415	0.3455	0.3429	0.3469	0.3444	0.3484
3/8	36	0.3449	83.4	0.3501	69.0	0.3449	0.3488	0.3449	0.3488	0.3461	0.3501	0.3474	0.3514
7/16	14	0.3602	83.3	0.3717	70.9	0.3602	0.3660	0.3630	0.3688	0.3659	0.3717	0.3688	0.3746
7/16	20	0.3834	83.3	0.3916	70.7	0.3834	0.3875	0.3855	0.3896	0.3875	0.3916	0.3896	0.3937
7/16	28	0.3988	83.4	0.4051	70.0	0.3988	0.4020	0.3995	0.4035	0.4011	0.4051	0.4017	0.4067
1/2	12	0.4098	83.3	0.4223	71.8	0.4098	0.4161	0.4129	0.4192	0.4160	0.4223	0.4192	0.4255
1/2	13	0.4167	83.4	0.4284	71.7	0.4167	0.4225	0.4196	0.4254	0.4226	0.4284	0.4255	0.4313
1/2	20	0.4459	83.3	0.4537	71.3	0.4459	0.4498	0.4477	0.4517	0.4497	0.4537	0.4516	0.4556
1/2	28	0.4613	83.4	0.4676	70.0	0.4613	0.4645	0.4620	0.4660	0.4636	0.4676	0.4652	0.4692
9/16	12	0.4723	83.3	0.4843	72.2	0.4723	0.4783	0.4753	0.4813	0.4783	0.4843	0.4813	0.4873
9/16	18	0.5024	83.3	0.5106	71.9	0.5024	0.5065	0.5045	0.5086	0.5065	0.5106	0.5086	0.5127

a The differences between limits are equal to the minor diameter tolerances given in Table 30 for lengths of engagement to and including 1/3 D. However, the minimum values for lengths of engagement greater than 1/3 D in sizes 1/4 in., and larger are adjusted so that the difference between limits is never less than 0.0040 in. For diameter-pitch combinations other than those given in this table, the tolerances given in Table 30 should be similarly applied to determine hole size limits. See Appendix H.

b Based on a length of engagement equal to the nominal diameter.

c Based on values as rounded off in the preceding column.

UNIFIED AND AMERICAN SCREW THREADS-APPENDIX I

TABLE 33 (CONTINUED) CLASS 3B, RECOMMENDED HOLE SIZE LIMITS BEFORE THREADING FOR DIFFERENT LENGTHS OF ENGAGEMENT UNC, UNF, UNEF, UN, NC, NF, NEF, N, AND SELECTED SIZES OF UNS AND NS SERIES (BASED ON TABLE 30)[a]

Nominal Size	Threads Per Inch	Unified and American Standard Internal Thread Minor Diameter				Length of Engagement							
						To and including 1/3D		Above 1/3D to 2/3D		Above 2/3D to 1-1/2D		Above 1-1/2D to 3D	
						RECOMMENDED HOLE SIZE							
		Min.	Per cent of Basic Thread Height[c]	Max.[b]	Per cent of Basic Thread Height[c]	Min.	Max.	Min.	Max.	Min.	Max.	Min.	Max.
9/16	24	0.5174	83.3	0.5244	70.4	0.5174	0.5209	0.5186	0.5226	0.5204	0.5244	0.5221	0.5261
9/16	28	0.5238	83.4	0.5301	69.8	0.5238	0.5270	0.5245	0.5285	0.5261	0.5301	0.5277	0.5317
5/8	11	0.5266	83.3	0.5391	72.7	0.5266	0.5328	0.5298	0.5360	0.5329	0.5391	0.5360	0.5422
5/8	12	0.5348	83.3	0.5463	72.7	0.5348	0.5406	0.5377	0.5435	0.5405	0.5463	0.5434	0.5492
5/8	18	0.5649	83.3	0.5730	72.1	0.5649	0.5690	0.5670	0.5711	0.5690	0.5730	0.5711	0.5752
5/8	24	0.5799	83.3	0.5869	70.4	0.5799	0.5834	0.5811	0.5851	0.5829	0.5869	0.5846	0.5886
5/8	28	0.5863	83.4	0.5926	69.8	0.5863	0.5895	0.5870	0.5910	0.5886	0.5926	0.5902	0.5942
11/16	12	0.5973	83.3	0.6085	73.0	0.5973	0.6029	0.6001	0.6057	0.6029	0.6085	0.6057	0.6113
11/16	24	0.6424	83.3	0.6494	70.4	0.6424	0.6459	0.6436	0.6476	0.6454	0.6494	0.6471	0.6511
3/4	10	0.6417	83.4	0.6545	73.5	0.6417	0.6481	0.6449	0.6513	0.6481	0.6545	0.6513	0.6577
3/4	12	0.6598	83.3	0.6707	73.3	0.6598	0.6652	0.6626	0.6680	0.6653	0.6707	0.6680	0.6734
3/4	16	0.6823	83.4	0.6908	72.9	0.6823	0.6866	0.6844	0.6887	0.6865	0.6908	0.6886	0.6929
3/4	20	0.6959	83.3	0.7037	71.3	0.6959	0.6998	0.6977	0.7017	0.6997	0.7037	0.7016	0.7056
3/4	28	0.7113	83.4	0.7176	69.8	0.7113	0.7145	0.7120	0.7160	0.7136	0.7176	0.7152	0.7192
13/16	12	0.7223	83.3	0.7329	73.5	0.7223	0.7276	0.7250	0.7303	0.7276	0.7329	0.7303	0.7356
13/16	16	0.7448	83.4	0.7533	72.9	0.7448	0.7491	0.7469	0.7512	0.7490	0.7533	0.7511	0.7554
13/16	20	0.7584	83.3	0.7662	71.3	0.7584	0.7623	0.7602	0.7642	0.7622	0.7662	0.7641	0.7681
7/8	9	0.7547	83.3	0.7681	74.1	0.7547	0.7614	0.7580	0.7647	0.7614	0.7681	0.7647	0.7714
7/8	12	0.7848	83.3	0.7952	73.7	0.7848	0.7900	0.7874	0.7926	0.7900	0.7952	0.7926	0.7978
7/8	14	0.7977	83.3	0.8068	73.5	0.7977	0.8022	0.8000	0.8045	0.8023	0.8068	0.8045	0.8090
7/8	16	0.8073	83.4	0.8158	72.9	0.8073	0.8116	0.8094	0.8137	0.8115	0.8158	0.8136	0.8179
7/8	20	0.8209	83.3	0.8287	71.3	0.8209	0.8248	0.8227	0.8267	0.8247	0.8287	0.8266	0.8306
7/8	28	0.8363	83.4	0.8426	69.8	0.8363	0.8395	0.8370	0.8410	0.8386	0.8426	0.8402	0.8442
15/16	12	0.8473	83.3	0.8575	73.9	0.8473	0.8524	0.8499	0.8550	0.8524	0.8575	0.8550	0.8601
15/16	16	0.8698	83.4	0.8783	72.9	0.8698	0.8741	0.8719	0.8762	0.8740	0.8783	0.8761	0.8804
15/16	20	0.8834	83.3	0.8912	71.3	0.8834	0.8873	0.8852	0.8892	0.8872	0.8912	0.8891	0.8931
1	8	0.8647	83.3	0.8797	74.1	0.8647	0.8722	0.8684	0.8759	0.8722	0.8797	0.8760	0.8835
1	12	0.9098	83.3	0.9198	74.1	0.9098	0.9148	0.9123	0.9173	0.9148	0.9198	0.9173	0.9223
1	14	0.9227	83.3	0.9315	73.8	0.9227	0.9271	0.9249	0.9293	0.9271	0.9315	0.9293	0.9337
1	16	0.9323	83.4	0.9408	72.9	0.9323	0.9366	0.9344	0.9387	0.9365	0.9408	0.9386	0.9429
1	20	0.9459	83.3	0.9537	71.3	0.9459	0.9498	0.9477	0.9517	0.9497	0.9537	0.9516	0.9556
1	28	0.9613	83.4	0.9676	69.8	0.9613	0.9645	0.9620	0.9660	0.9636	0.9676	0.9652	0.9692
1-1/16	12	0.9723	83.3	0.9823	74.1	0.9723	0.9773	0.9748	0.9798	0.9773	0.9823	0.9798	0.9848
1-1/16	16	0.9948	83.4	1.0033	72.9	0.9948	0.9991	0.9969	1.0012	0.9990	1.0033	1.0011	1.0054
1-1/16	18	1.0024	83.3	1.0105	72.1	1.0024	1.0065	1.0044	1.0085	1.0064	1.0105	1.0085	1.0126
1-1/8	7	0.9704	83.3	0.9875	74.1	0.9704	0.9790	0.9747	0.9833	0.9789	0.9875	0.9832	0.9918
1-1/8	8	0.9897	83.3	1.0047	74.1	0.9897	0.9972	0.9934	1.0009	0.9972	1.0047	1.0010	1.0085
1-1/8	12	1.0348	83.3	1.0448	74.1	1.0348	1.0398	1.0373	1.0423	1.0398	1.0448	1.0423	1.0473
1-1/8	16	1.0573	83.4	1.0658	72.9	1.0573	1.0616	1.0594	1.0637	1.0615	1.0658	1.0636	1.0679
1-1/8	18	1.0649	83.3	1.0730	72.1	1.0649	1.0690	1.0669	1.0710	1.0689	1.0730	1.0710	1.0751
1-1/8	20	1.0709	83.3	1.0787	71.3	1.0709	1.0748	1.0727	1.0767	1.0747	1.0787	1.0766	1.0806
1-1/8	28	1.0863	83.4	1.0926	69.8	1.0863	1.0895	1.0870	1.0910	1.0886	1.0926	1.0902	1.0942

a The differences between limits are equal to the minor diameter tolerances given in Table 30 for lengths of engagement to and including 1/3 D. However, the minimum values for lengths of engagement greater than 1/3 D in sizes 1/4 in., and larger are adjusted so that the difference between limits is never less than 0.0040 in. For diameter-pitch combinations other than those given in this table, the tolerances given in Table 30 should be similarly applied to determine hole size limits. See Appendix H.

b Based on a length of engagement equal to the nominal diameter.

c Based on values as rounded off in the preceding column.

UNIFIED AND AMERICAN SCREW THREADS-APPENDIX I

TABLE 33 (CONTINUED) CLASS 3B, RECOMMENDED HOLE SIZE LIMITS BEFORE THREADING FOR DIFFERENT LENGTHS OF ENGAGEMENT UNC, UNF, UNEF, UN, NC, NF, NEF, N, AND SELECTED SIZES OF UNS AND NS SERIES (BASED ON TABLE 30)[a]

Nominal Size	Threads Per Inch	Unified and American Standard Internal Thread Minor Diameter				Length of Engagement							
						To and including 1/3D		Above 1/3D to 2/3D		Above 2/3D to 1-1/2D		Above 1-1/2D to 3D	
						RECOMMENDED HOLE SIZE							
		Min.	Per cent of Basic Thread Height[c]	Max.[b]	Per cent of Basic Thread Height[c]	Min.	Max.	Min.	Max.	Min.	Max.	Min.	Max.
1-3/16	12	1.0973	83.3	1.1073	74.1	1.0973	1.1023	1.0998	1.1048	1.1023	1.1073	1.1048	1.1098
1-3/16	16	1.1198	83.4	1.1283	72.9	1.1198	1.1241	1.1219	1.1262	1.1240	1.1283	1.1261	1.1304
1-3/16	18	1.1274	83.3	1.1355	72.1	1.1274	1.1315	1.1294	1.1335	1.1314	1.1355	1.1335	1.1376
1-1/4	7	1.0954	83.3	1.1125	74.1	1.0954	1.1040	1.0997	1.1083	1.1039	1.1125	1.1082	1.1168
1-1/4	8	1.1147	83.3	1.1297	74.1	1.1147	1.1222	1.1184	1.1259	1.1222	1.1297	1.1260	1.1335
1-1/4	12	1.1598	83.3	1.1698	74.1	1.1598	1.1648	1.1623	1.1673	1.1648	1.1698	1.1673	1.1723
1-1/4	16	1.1823	83.4	1.1908	72.9	1.1823	1.1866	1.1844	1.1887	1.1865	1.1908	1.1886	1.1929
1-1/4	18	1.1899	83.3	1.1980	72.1	1.1899	1.1940	1.1919	1.1960	1.1939	1.1980	1.1960	1.2001
1-1/4	20	1.1959	83.3	1.2037	71.3	1.1959	1.1998	1.1977	1.2017	1.1997	1.2037	1.2016	1.2056
1-5/16	12	1.2223	83.3	1.2323	74.1	1.2223	1.2273	1.2248	1.2298	1.2273	1.2323	1.2298	1.2348
1-5/16	16	1.2448	83.4	1.2533	72.9	1.2448	1.2491	1.2469	1.2512	1.2490	1.2533	1.2511	1.2554
1-5/16	18	1.2524	83.3	1.2605	72.1	1.2524	1.2565	1.2544	1.2585	1.2564	1.2605	1.2585	1.2626
1-3/8	6	1.1946	83.3	1.2146	74.1	1.1946	1.2046	1.1996	1.2096	1.2046	1.2146	1.2096	1.2196
1-3/8	8	1.2397	83.3	1.2547	74.1	1.2397	1.2472	1.2434	1.2509	1.2472	1.2547	1.2510	1.2585
1-3/8	12	1.2848	83.3	1.2948	74.1	1.2848	1.2898	1.2873	1.2923	1.2898	1.2948	1.2923	1.2973
1-3/8	16	1.3073	83.4	1.3158	72.9	1.3073	1.3116	1.3094	1.3137	1.3115	1.3158	1.3136	1.3179
1-3/8	18	1.3149	83.3	1.3230	72.1	1.3149	1.3190	1.3169	1.3210	1.3189	1.3230	1.3210	1.3251
1-7/16	12	1.3473	83.3	1.3573	74.1	1.3473	1.3523	1.3498	1.3548	1.3523	1.3573	1.3548	1.3598
1-7/16	16	1.3698	83.4	1.3783	72.9	1.3698	1.3741	1.3719	1.3762	1.3740	1.3783	1.3761	1.3804
1-7/16	18	1.3774	83.3	1.3855	72.1	1.3774	1.3815	1.3794	1.3835	1.3814	1.3855	1.3835	1.3876
1-1/2	6	1.3196	83.3	1.3396	74.1	1.3196	1.3296	1.3246	1.3346	1.3296	1.3396	1.3346	1.3446
1-1/2	8	1.3647	83.3	1.3797	74.1	1.3647	1.3722	1.3684	1.3759	1.3722	1.3797	1.3760	1.3835
1-1/2	12	1.4098	83.3	1.4198	74.1	1.4098	1.4148	1.4123	1.4173	1.4148	1.4198	1.4173	1.4223
1-1/2	16	1.4323	83.4	1.4408	72.9	1.4323	1.4366	1.4344	1.4387	1.4365	1.4408	1.4386	1.4429
1-1/2	18	1.4399	83.3	1.4480	72.1	1.4399	1.4440	1.4419	1.4460	1.4439	1.4480	1.4460	1.4501
1-1/2	20	1.4459	83.3	1.4537	71.3	1.4459	1.4498	1.4477	1.4517	1.4497	1.4537	1.4516	1.4556
1-9/16	16	1.4948	83.4	1.5033	72.9	1.4948	1.4991	1.4969	1.5012	1.4990	1.5033	1.5011	1.5054
1-9/16	18	1.5024	83.3	1.5105	72.1	1.5024	1.5065	1.5044	1.5085	1.5064	1.5105	1.5085	1.5126
1-5/8	8	1.4897	83.3	1.5047	74.1	1.4897	1.4972	1.4934	1.5009	1.4972	1.5047	1.5010	1.5085
1-5/8	12	1.5348	83.3	1.5448	74.1	1.5348	1.5398	1.5373	1.5423	1.5398	1.5448	1.5423	1.5473
1-5/8	16	1.5573	83.4	1.5658	72.9	1.5573	1.5616	1.5594	1.5637	1.5615	1.5658	1.5636	1.5679
1-5/8	18	1.5649	83.3	1.5730	72.1	1.5649	1.5690	1.5669	1.5710	1.5689	1.5730	1.5710	1.5751
1-11/16	16	1.6198	83.4	1.6283	72.9	1.6198	1.6241	1.6219	1.6262	1.6240	1.6283	1.6261	1.6304
1-11/16	18	1.6274	83.3	1.6355	72.1	1.6274	1.6315	1.6294	1.6335	1.6314	1.6355	1.6335	1.6376
1-3/4	5	1.5335	83.3	1.5575	74.1	1.5335	1.5455	1.5395	1.5515	1.5455	1.5575	1.5515	1.5635
1-3/4	8	1.6147	83.3	1.6297	74.1	1.6147	1.6222	1.6184	1.6259	1.6222	1.6297	1.6260	1.6335
1-3/4	12	1.6598	83.3	1.6698	74.1	1.6598	1.6648	1.6623	1.6673	1.6648	1.6698	1.6673	1.6723
1-3/4	16	1.6823	83.4	1.6908	72.9	1.6823	1.6866	1.6844	1.6887	1.6865	1.6908	1.6886	1.6929
1-3/4	20	1.6959	83.3	1.7037	71.3	1.6959	1.6998	1.6977	1.7017	1.6997	1.7037	1.7016	1.7056
1-13/16	16	1.7448	83.4	1.7533	72.9	1.7448	1.7491	1.7469	1.7512	1.7490	1.7533	1.7511	1.7554

a The differences between limits are equal to the minor diameter tolerances given in Table 30 for lengths of engagement to and including 1/3 D. However, the minimum values for lengths of engagement greater than 1/3 D in sizes 1/4 in., and larger are adjusted so that the difference between limits is never less than 0.0040 in. For diameter-pitch combinations other than those given in this table, the tolerances given in Table 30 should be similarly applied to determine hole size limits. See Appendix H.

b Based on a length of engagement equal to the nominal diameter.

c Based on values as rounded off in the preceding column.

UNIFIED AND AMERICAN SCREW THREADS-APPENDIX I

TABLE 33 (CONTINUED) CLASS 3B, RECOMMENDED HOLE SIZE LIMITS BEFORE THREADING FOR DIFFERENT LENGTHS OF ENGAGEMENT UNC, UNF, UNEF, UN, NC, NF, NEF, N, AND SELECTED SIZES OF UNS AND NS SERIES (BASED ON TABLE 30)[a]

Nominal Size	Threads Per Inch	Unified and American Standard Internal Thread Minor Diameter				Length of Engagement							
						To and including 1/3D		Above 1/3D to 2/3D		Above 2/3D to 1-1/2D		Above 1-1/2D to 3D	
						RECOMMENDED HOLE SIZE							
		Min.	Per cent of Basic Thread Height[c]	Max.[b]	Per cent of Basic Thread Height[c]	Min.	Max.	Min.	Max.	Min.	Max.	Min.	Max.
1-7/8	8	1.7397	83.3	1.7547	74.1	1.7397	1.7472	1.7434	1.7509	1.7472	1.7547	1.7510	1.7585
1-7/8	12	1.7848	83.3	1.7948	74.1	1.7848	1.7898	1.7873	1.7923	1.7898	1.7948	1.7923	1.7973
1-7/8	16	1.8073	83.4	1.8158	72.9	1.8073	1.8116	1.8094	1.8137	1.8115	1.8158	1.8136	1.8179
1-15/16	16	1.8698	83.4	1.8783	72.9	1.8698	1.8741	1.8719	1.8762	1.8740	1.8783	1.8761	1.8804
2	4½	1.7594	83.3	1.7861	74.1	1.7594	1.7727	1.7661	1.7794	1.7728	1.7861	1.7794	1.7927
2	8	1.8647	83.3	1.8797	74.1	1.8647	1.8722	1.8684	1.8759	1.8722	1.8797	1.8760	1.8835
2	12	1.9098	83.3	1.9198	74.1	1.9098	1.9148	1.9123	1.9173	1.9148	1.9198	1.9173	1.9223
2	16	1.9323	83.4	1.9408	72.9	1.9323	1.9366	1.9344	1.9387	1.9365	1.9408	1.9386	1.9429
2	20	1.9459	83.3	1.9537	71.3	1.9459	1.9498	1.9477	1.9517	1.9497	1.9537	1.9516	1.9556
2-1/16	16	1.9948	83.4	2.0033	72.9	1.9948	1.9991	1.9969	2.0012	1.9990	2.0033	2.0011	2.0054
2-1/8	8	1.9897	83.3	2.0047	74.1	1.9897	1.9972	1.9934	2.0009	1.9972	2.0047	2.0010	2.0085
2-1/8	12	2.0348	83.3	2.0448	74.1	2.0348	2.0398	2.0373	2.0423	2.0398	2.0448	2.0423	2.0473
2-1/8	16	2.0573	83.4	2.0658	72.9	2.0573	2.0616	2.0594	2.0637	2.0615	2.0658	2.0636	2.0679
2-3/16	16	2.1198	83.4	2.1283	72.9	2.1198	2.1241	2.1219	2.1262	2.1240	2.1283	2.1261	2.1304
2-1/4	4½	2.0094	83.3	2.0361	74.1	2.0094	2.0227	2.0161	2.0294	2.0228	2.0361	2.0294	2.0427
2-1/4	8	2.1147	83.3	2.1297	74.1	2.1147	2.1222	2.1184	2.1259	2.1222	2.1297	2.1260	2.1335
2-1/4	12	2.1598	83.3	2.1698	74.1	2.1598	2.1648	2.1623	2.1673	2.1648	2.1698	2.1673	2.1723
2-1/4	16	2.1823	83.4	2.1908	72.9	2.1823	2.1866	2.1844	2.1887	2.1865	2.1908	2.1886	2.1929
2-1/4	20	2.1959	83.3	2.2037	71.3	2.1959	2.1998	2.1977	2.2017	2.1997	2.2037	2.2016	2.2056
2-5/16	16	2.2448	83.4	2.2533	72.9	2.2448	2.2491	2.2469	2.2512	2.2490	2.2533	2.2511	2.2554
2-3/8	12	2.2848	83.3	2.2948	74.1	2.2848	2.2898	2.2873	2.2923	2.2898	2.2948	2.2923	2.2973
2-3/8	16	2.3073	83.4	2.3158	72.9	2.3073	2.3116	2.3094	2.3137	2.3115	2.3158	2.3136	2.3179
2-7/16	16	2.3698	83.4	2.3783	72.9	2.3698	2.3741	2.3719	2.3762	2.3740	2.3783	2.3761	2.3804
2-1/2	4	2.2294	83.3	2.2594	74.1	2.2294	2.2444	2.2369	2.2519	2.2444	2.2594	2.2519	2.2669
2-1/2	8	2.3647	83.3	2.3797	74.1	2.3647	2.3722	2.3684	2.3759	2.3722	2.3797	2.3760	2.3835
2-1/2	12	2.4098	83.3	2.4198	74.1	2.4098	2.4148	2.4123	2.4173	2.4148	2.4198	2.4173	2.4223
2-1/2	16	2.4323	83.4	2.4408	72.9	2.4323	2.4366	2.4344	2.4387	2.4365	2.4408	2.4386	2.4429
2-1/2	20	2.4459	83.3	2.4537	71.3	2.4459	2.4498	2.4478	2.4517	2.4497	2.4537	2.4516	2.4556
2-5/8	12	2.5348	83.3	2.5448	74.1	2.5348	2.5398	2.5373	2.5423	2.5398	2.5448	2.5423	2.5473
2-5/8	16	2.5573	83.4	2.5658	72.9	2.5573	2.5616	2.5594	2.5637	2.5615	2.5658	2.5636	2.5679
2-3/4	4	2.4794	83.3	2.5094	74.1	2.4794	2.4944	2.4869	2.5019	2.4944	2.5094	2.5019	2.5169
2-3/4	8	2.6147	83.3	2.6297	74.1	2.6147	2.6222	2.6184	2.6259	2.6222	2.6297	2.6260	2.6335
2-3/4	12	2.6598	83.3	2.6698	74.1	2.6598	2.6648	2.6623	2.6673	2.6648	2.6698	2.6673	2.6723
2-3/4	16	2.6823	83.4	2.6908	72.9	2.6823	2.6866	2.6844	2.6887	2.6865	2.6908	2.6886	2.6929
2-7/8	12	2.7848	83.3	2.7948	74.1	2.7848	2.7898	2.7873	2.7923	2.7898	2.7948	2.7923	2.7973
2-7/8	16	2.8073	83.4	2.8158	72.9	2.8073	2.8116	2.8094	2.8137	2.8115	2.8158	2.8136	2.8179
3	4	2.7294	83.3	2.7594	74.1	2.7294	2.7444	2.7369	2.7519	2.7444	2.7594	2.7519	2.7669
3	8	2.8647	83.3	2.8797	74.1	2.8647	2.8722	2.8684	2.8759	2.8722	2.8797	2.8760	2.8835

a The differences between limits are equal to the minor diameter tolerances given in Table 30 for lengths of engagement to and including 1/3 D. However, the minimum values for lengths of engagement greater than 1/3 D in sizes 1/4 in., and larger are adjusted so that the difference between limits is never less than 0.0040 in. For diameter-pitch combinations other than those given in this table, the tolerances given in Table 30 should be similarly applied to determine hole size limits. See Appendix H.

b Based on a length of engagement equal to the nominal diameter.

c Based on values as rounded off in the preceding column.

UNIFIED AND AMERICAN SCREW THREADS-APPENDIX I

TABLE 33 (CONTINUED) CLASS 3B, RECOMMENDED HOLE SIZE LIMITS BEFORE THREADING FOR DIFFERENT LENGTHS OF ENGAGEMENT UNC, UNF, UNEF, UN, NC, NF, NEF, N, AND SELECTED SIZES OF UNS AND NS SERIES (BASED ON TABLE 30)[a]

Nominal Size	Threads Per Inch	Unified and American Standard Internal Thread Minor Diameter				Length of Engagement							
						To and including 1/3D		Above 1/3D to 2/3D		Above 2/3D to 1-1/2D		Above 1-1/2D to 3D	
						RECOMMENDED HOLE SIZE							
		Min.	Per cent of Basic Thread Height[c]	Max.[b]	Per cent of Basic Thread Height[c]	Min.	Max.	Min.	Max.	Min.	Max.	Min.	Max.
3	12	2.9098	83.3	2.9198	74.1	2.9098	2.9148	2.9123	2.9173	2.9148	2.9198	2.9173	2.9223
3	16	2.9323	83.4	2.9408	72.9	2.9323	2.9366	2.9344	2.9387	2.9365	2.9408	2.9386	2.9429
3-1/8	12	3.0348	83.3	3.0448	74.1	3.0348	3.0398	3.0373	3.0423	3.0398	3.0448	3.0423	3.0473
3-1/8	16	3.0573	83.4	3.0658	72.9	3.0573	3.0616	3.0594	3.0637	3.0615	3.0658	3.0636	3.0679
3-1/4	4	2.9794	83.3	3.0094	74.1	2.9794	2.9944	2.9869	3.0019	2.9944	3.0094	3.0019	3.0169
3-1/4	8	3.1147	83.3	3.1297	74.1	3.1147	3.1222	3.1184	3.1259	3.1222	3.1297	3.1260	3.1335
3-1/4	12	3.1598	83.3	3.1698	74.1	3.1598	3.1648	3.1623	3.1673	3.1648	3.1698	3.1673	3.1723
3-1/4	16	3.1823	83.4	3.1908	72.9	3.1823	3.1866	3.1844	3.1887	3.1865	3.1908	3.1886	3.1929
3-3/8	12	3.2848	83.3	3.2948	74.1	3.2848	3.2898	3.2873	3.2923	3.2898	3.2948	3.2923	3.2973
3-3/8	16	3.3073	83.4	3.3158	72.9	3.3073	3.3116	3.3094	3.3137	3.3115	3.3158	3.3136	3.3179
3-1/2	4	3.2294	83.3	3.2594	74.1	3.2294	3.2444	3.2369	3.2519	3.2444	3.2594	3.2519	3.2669
3-1/2	8	3.3647	83.3	3.3797	74.1	3.3647	3.3722	3.3684	3.3759	3.3722	3.3797	3.3760	3.3835
3-1/2	12	3.4098	83.3	3.4198	74.1	3.4098	3.4148	3.4123	3.4173	3.4148	3.4198	3.4173	3.4223
3-1/2	16	3.4323	83.4	3.4408	72.9	3.4323	3.4366	3.4344	3.4387	3.4365	3.4408	3.4386	3.4429
3-5/8	12	3.5348	83.3	3.5448	74.1	3.5348	3.5398	3.5373	3.5423	3.5398	3.5448	3.5423	3.5473
3-5/8	16	3.5573	83.4	3.5658	72.9	3.5573	3.5616	3.5594	3.5637	3.5615	3.5658	3.5636	3.5679
3-3/4	4	3.4794	83.3	3.5094	74.1	3.4794	3.4944	3.4869	3.5019	3.4944	3.5094	3.5019	3.5169
3-3/4	8	3.6147	83.3	3.6297	74.1	3.6147	3.6222	3.6184	3.6259	3.6222	3.6297	3.6260	3.6335
3-3/4	12	3.6598	83.3	3.6698	74.1	3.6598	3.6648	3.6623	3.6673	3.6648	3.6698	3.6673	3.6723
3-3/4	16	3.6823	83.4	3.6908	72.9	3.6823	3.6866	3.6844	3.6887	3.6865	3.6908	3.6886	3.6929
3-7/8	12	3.7848	83.3	3.7948	74.1	3.7848	3.7898	3.7873	3.7923	3.7898	3.7948	3.7923	3.7973
3-7/8	16	3.8073	83.4	3.8158	72.9	3.8073	3.8116	3.8094	3.8137	3.8115	3.8158	3.8136	3.8179
4	4	3.7294	83.3	3.7594	74.1	3.7294	3.7444	3.7369	3.7519	3.7444	3.7594	3.7519	3.7669
4	8	3.8647	83.3	3.8797	74.1	3.8647	3.8722	3.8684	3.8759	3.8722	3.8797	3.8760	3.8835
4	12	3.9098	83.3	3.9198	74.1	3.9098	3.9148	3.9123	3.9173	3.9148	3.9198	3.9173	3.9223
4	16	3.9323	83.4	3.9408	72.9	3.9323	3.9366	3.9344	3.9387	3.9365	3.9408	3.9386	3.9429
4-1/4	4	3.9794	83.3	4.0094	74.1	3.9794	3.9944	3.9869	4.0019	3.9944	4.0094	4.0019	4.0169
4-1/4	8	4.1147	83.3	4.1297	74.1	4.1147	4.1222	4.1184	4.1259	4.1222	4.1297	4.1260	4.1335
4-1/4	12	4.1598	83.3	4.1698	74.1	4.1598	4.1648	4.1623	4.1673	4.1648	4.1698	4.1673	4.1723
4-1/4	16	4.1823	83.4	4.1908	72.9	4.1823	4.1866	4.1844	4.1887	4.1865	4.1908	4.1886	4.1929
4-1/2	4	4.2294	83.3	4.2594	74.1	4.2294	4.2444	4.2369	4.2519	4.2444	4.2594	4.2519	4.2669
4-1/2	8	4.3647	83.3	4.3797	74.1	4.3647	4.3722	4.3684	4.3759	4.3722	4.3797	4.3760	4.3835
4-1/2	12	4.4098	83.3	4.4198	74.1	4.4098	4.4148	4.4123	4.4173	4.4148	4.4198	4.4173	4.4223
4-1/2	16	4.4323	83.4	4.4408	72.9	4.4323	4.4366	4.4344	4.4387	4.4365	4.4408	4.4386	4.4429
4-3/4	8	4.6147	83.3	4.6297	74.1	4.6147	4.6222	4.6184	4.6259	4.6222	4.6297	4.6260	4.6335
4-3/4	12	4.6598	83.3	4.6698	74.1	4.6598	4.6648	4.6623	4.6673	4.6648	4.6698	4.6673	4.6723
4-3/4	16	4.6823	83.4	4.6908	72.9	4.6823	4.6866	4.6844	4.6887	4.6865	4.6908	4.6886	4.6929
5	8	4.8647	83.3	4.8797	74.1	4.8647	4.8722	4.8684	4.8759	4.8722	4.8797	4.8760	4.8835

a The differences between limits are equal to the minor diameter tolerances given in Table 30 for lengths of engagement to and including 1/3 D. However, the minimum values for lengths of engagement greater than 1/3 D in sizes 1/4 in., and larger are adjusted so that the difference between limits is never less than 0.0040 in. For diameter-pitch combinations other than those given in this table, the tolerances given in Table 30 should be similarly applied to determine hole size limits. See Appendix H.

b Based on a length of engagement equal to the nominal diameter.

c Based on values as rounded off in the preceding column.

UNIFIED AND AMERICAN SCREW THREADS-APPENDIX I

TABLE 33 (CONTINUED) CLASS 3B, RECOMMENDED HOLE SIZE LIMITS BEFORE THREADING FOR DIFFERENT LENGTHS OF ENGAGEMENT UNC, UNF, UNEF, UN, NC, NF, NEF, N, AND SELECTED SIZES OF UNS AND NS SERIES (BASED ON TABLE 30)[a]

Nominal Size	Threads Per Inch	Unified and American Standard Internal Thread Minor Diameter				Length of Engagement							
						To and including 1/3D		Above 1/3D to 2/3D		Above 2/3D to 1-1/2D		Above 1-1/2D to 3D	
						RECOMMENDED HOLE SIZE							
		Min.	Per cent of Basic Thread Height[c]	Max.[b]	Per cent of Basic Thread Height[c]	Min.	Max.	Min.	Max.	Min.	Max.	Min.	Max.
5	12	4.9098	83.3	4.9198	74.1	4.9098	4.9148	4.9123	4.9173	4.9148	4.9198	4.9173	4.9223
5	16	4.9323	83.4	4.9408	72.9	4.9323	4.9366	4.9344	4.9387	4.9365	4.9408	4.9386	4.9429
5-1/4	8	5.1147	83.3	5.1297	74.1	5.1147	5.1222	5.1184	5.1259	5.1222	5.1297	5.1260	5.1335
5-1/4	12	5.1598	83.3	5.1698	74.1	5.1598	5.1648	5.1623	5.1673	5.1648	5.1698	5.1673	5.1723
5-1/4	16	5.1823	83.4	5.1908	72.9	5.1823	5.1866	5.1844	5.1887	5.1865	5.1908	5.1886	5.1929
5-1/2	8	5.3647	83.3	5.3797	74.1	5.3647	5.3722	5.3684	5.3759	5.3722	5.3797	5.3760	5.3835
5-1/2	12	5.4098	83.3	5.4198	74.1	5.4098	5.4148	5.4123	5.4173	5.4148	5.4198	5.4173	5.4223
5-1/2	16	5.4323	83.4	5.4408	72.9	5.4323	5.4366	5.4344	5.4387	5.4365	5.4408	5.4386	5.4429
5-3/4	8	5.6147	83.3	5.6297	74.1	5.6147	5.6222	5.6184	5.6259	5.6222	5.6297	5.6260	5.6335
5-3/4	12	5.6598	83.3	5.6698	74.1	5.6598	5.6648	5.6623	5.6673	5.6648	5.6698	5.6673	5.6723
5-3/4	16	5.6823	83.4	5.6908	72.9	5.6823	5.6866	5.6844	5.6887	5.6865	5.6908	5.6886	5.6929
6	8	5.8647	83.3	5.8797	74.1	5.8647	5.8722	5.8684	5.8759	5.8722	5.8797	5.8760	5.8835
6	12	5.9098	83.3	5.9198	74.1	5.9098	5.9148	5.9123	5.9173	5.9148	5.9198	5.9173	5.9223
6	16	5.9323	83.4	5.9408	72.9	5.9323	5.9366	5.9344	5.9387	5.9365	5.9408	5.9386	5.9429

a The differences between limits are equal to the minor diameter tolerances given in Table 30 for lengths of engagement to and including 1/3 D. However, the minimum values for lengths of engagement greater than 1/3 D in sizes 1/4 in., and larger are adjusted so that the difference between limits is never less than 0.0040 in. For diameter-pitch combinations other than those given in this table, the tolerances given in Table 30 should be similarly applied to determine hole size limits. See Appendix H.

b Based on a length of engagement equal to the nominal diameter.

c Based on values as rounded off in the preceding column.

MANUFACTURED BY THE
ST. LOUIS
MISSOURI
LOOSE LEAF DEVICES CO.
42845