1969 Speed Control Electrical & Vacuum

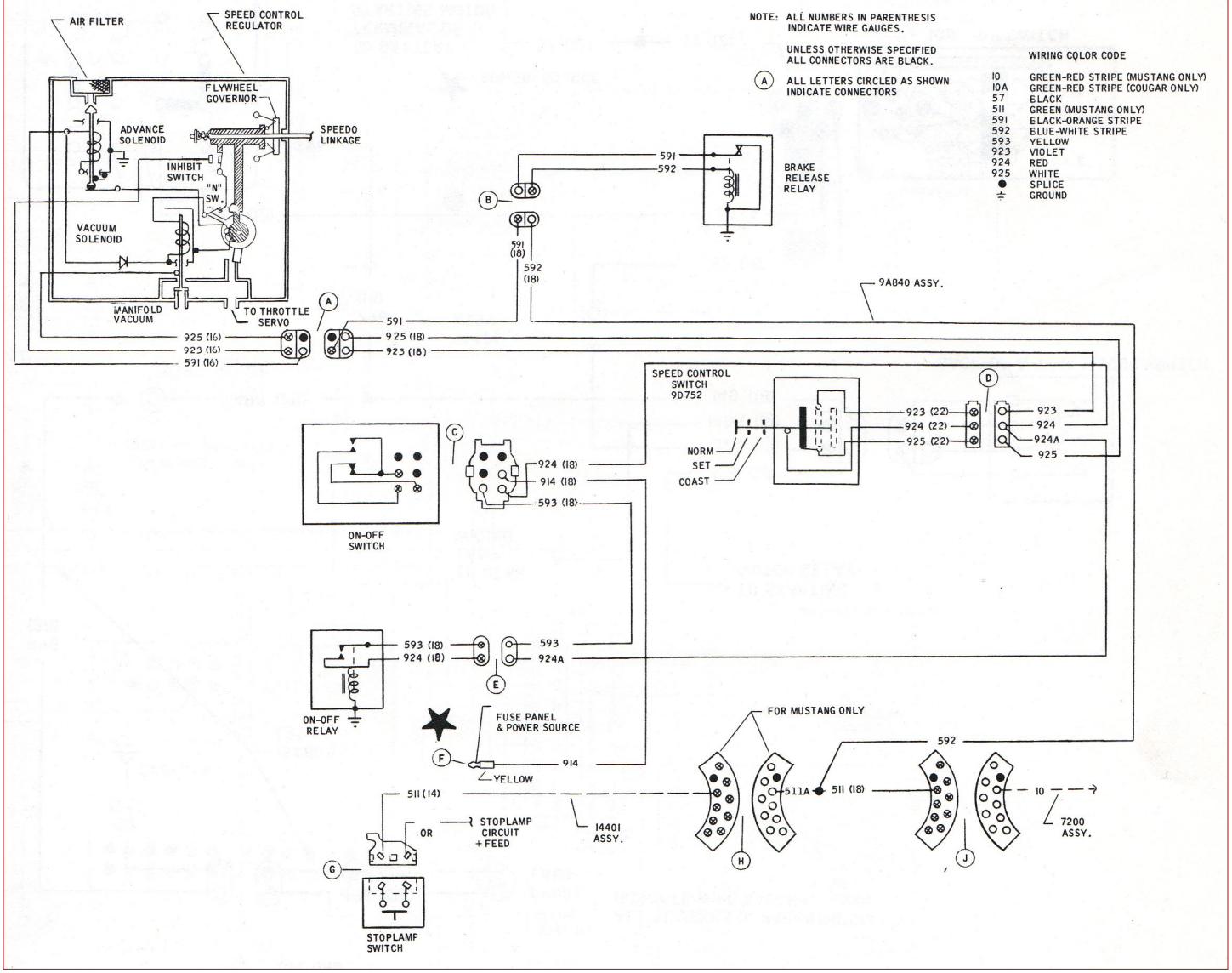

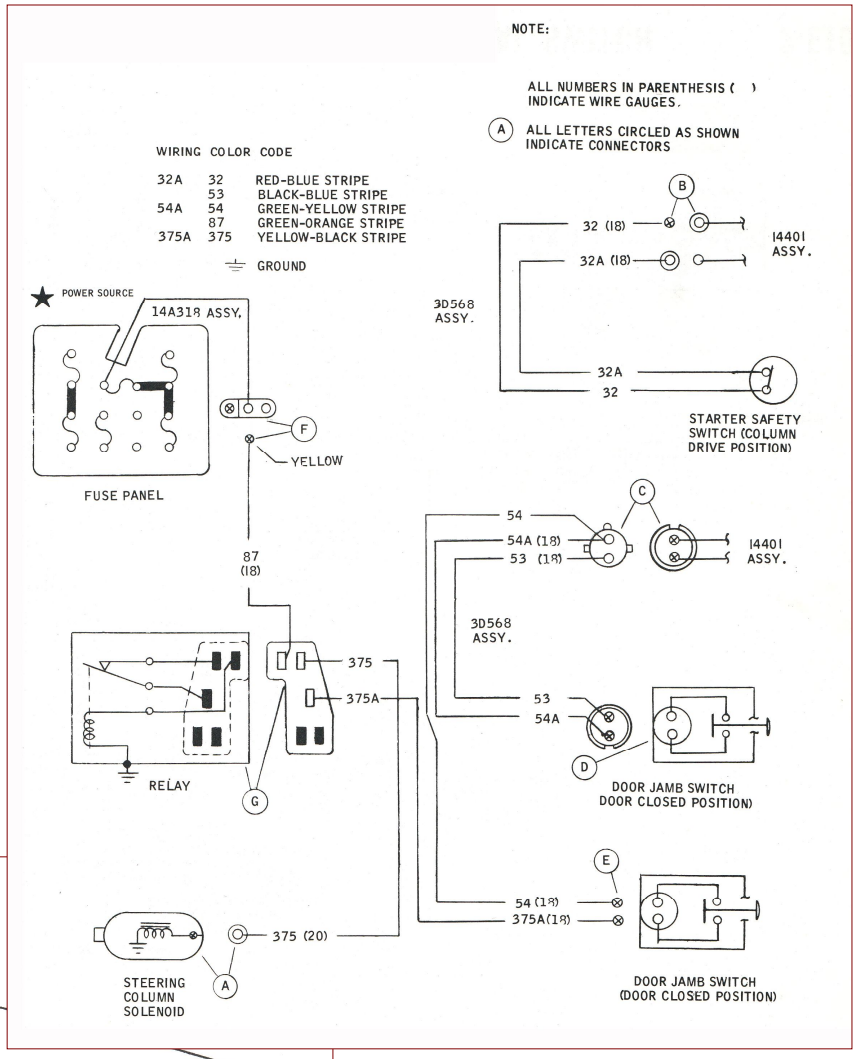
NOTE:
ALL NUMBERS IN PARENTHESIS ( ) INDICATE WIRE GAUGES.
A ALL LETTERS CIRCLED AS SHOWN INDICATE CONNECTORS
WIRING COLOR CODE
32A 32 RED-BLUE STRIPE
53 BLACK-BLUE STRIPE
54A 54 GREEN-YELLOW STRIPE
87 GREEN-ORANGE STRIPE
375A 375 YELLOW-BLACK STRIPE
GROUND
POWER SOURCE
14A318 ASSY.
FUSE PANEL
YELLOW
87 (18)
RELAY
375
375A
3D568 ASSY.
32 (18)
32A (18)
14401 ASSY.
32A
32
STARTER SAFETY SWITCH (COLUMN DRIVE POSITION)
54
54A (18)
53 (18)
14401 ASSY.
3D568 ASSY.
53
54A
DOOR JAMB SWITCH DOOR CLOSED POSITION)
54 (18)
375A(18)
DOOR JAMB SWITCH (DOOR CLOSED POSITION)
375 (20)
STEERING COLUMN SOLENOID

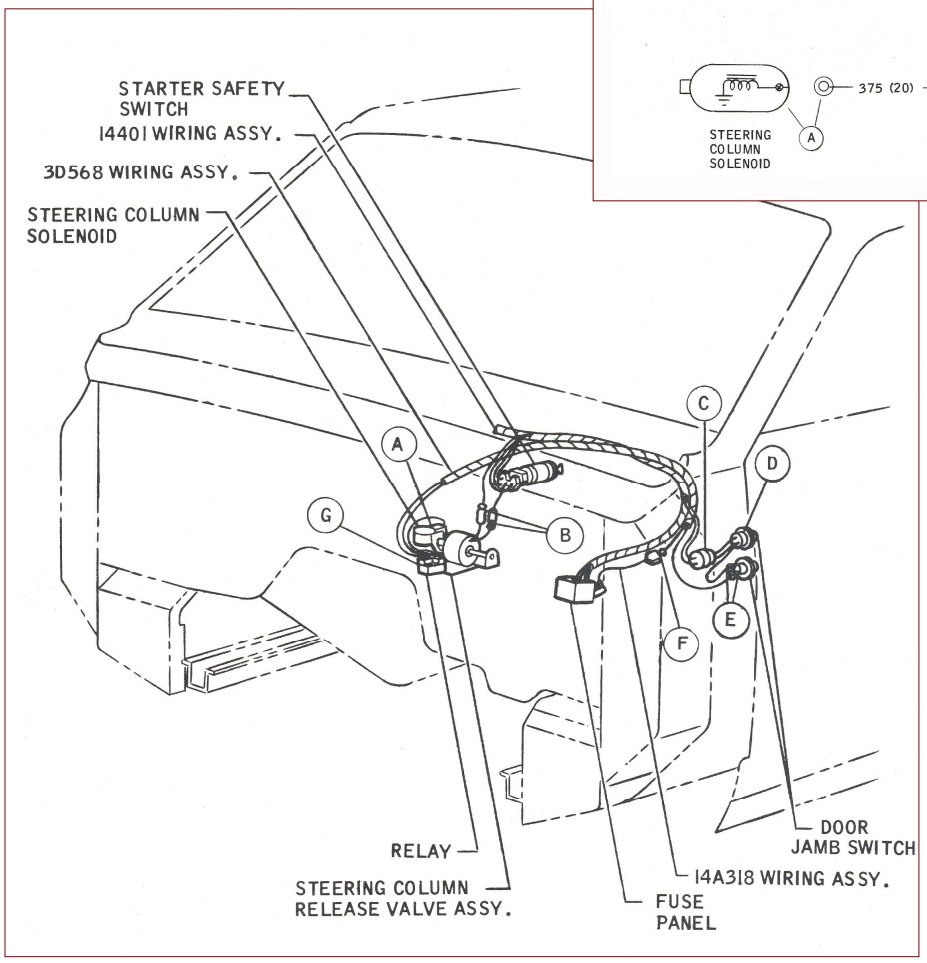
STARTER SAFETY SWITCH
14401 WIRING ASSY.
3D568 WIRING ASSY.
STEERING COLUMN SOLENOID
RELAY
STEERING COLUMN RELEASE VALVE ASSY.
FUSE PANEL
14A318 WIRING ASSY.
DOOR JAMB SWITCH

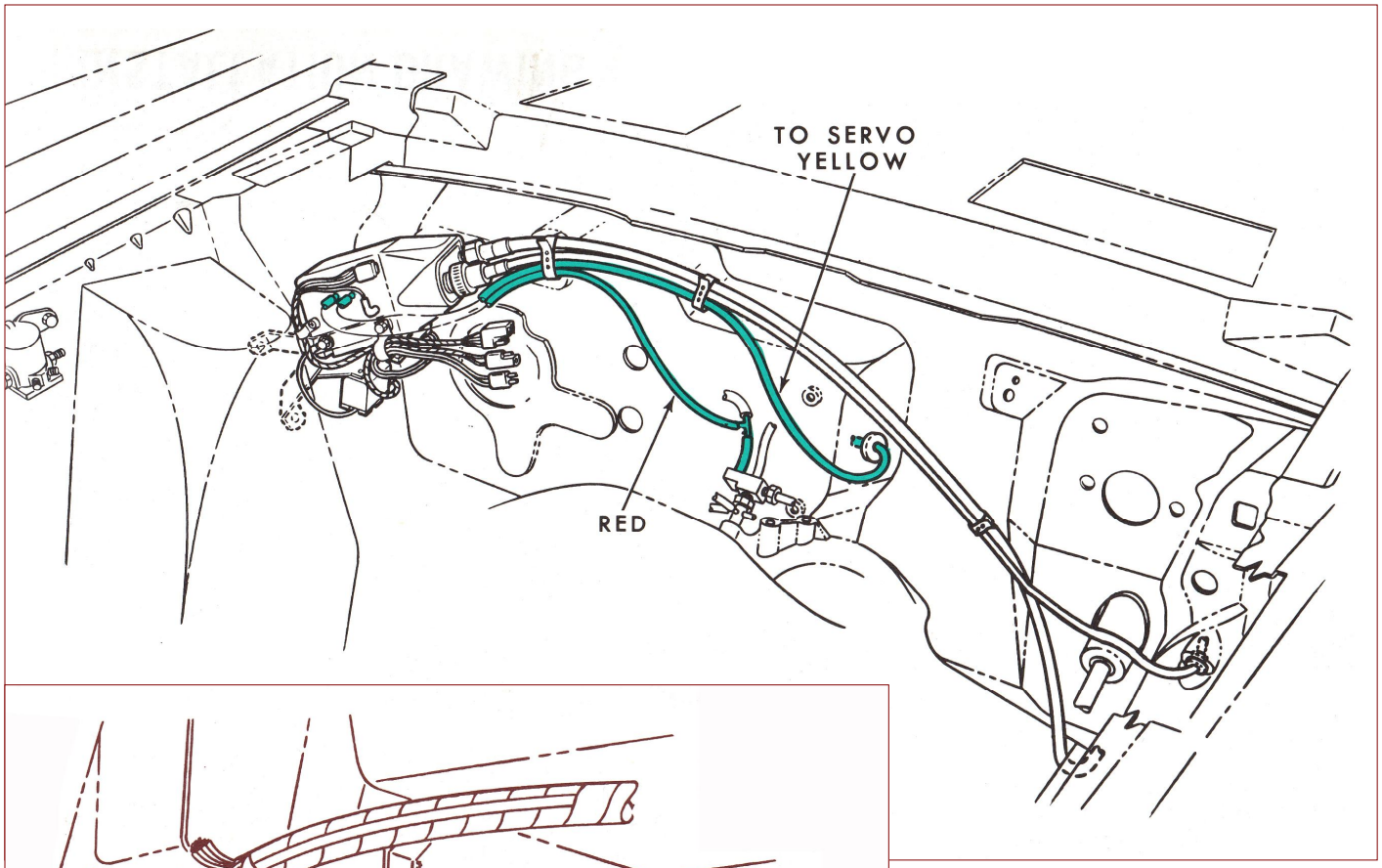
TO SERVO
YELLOW
RED

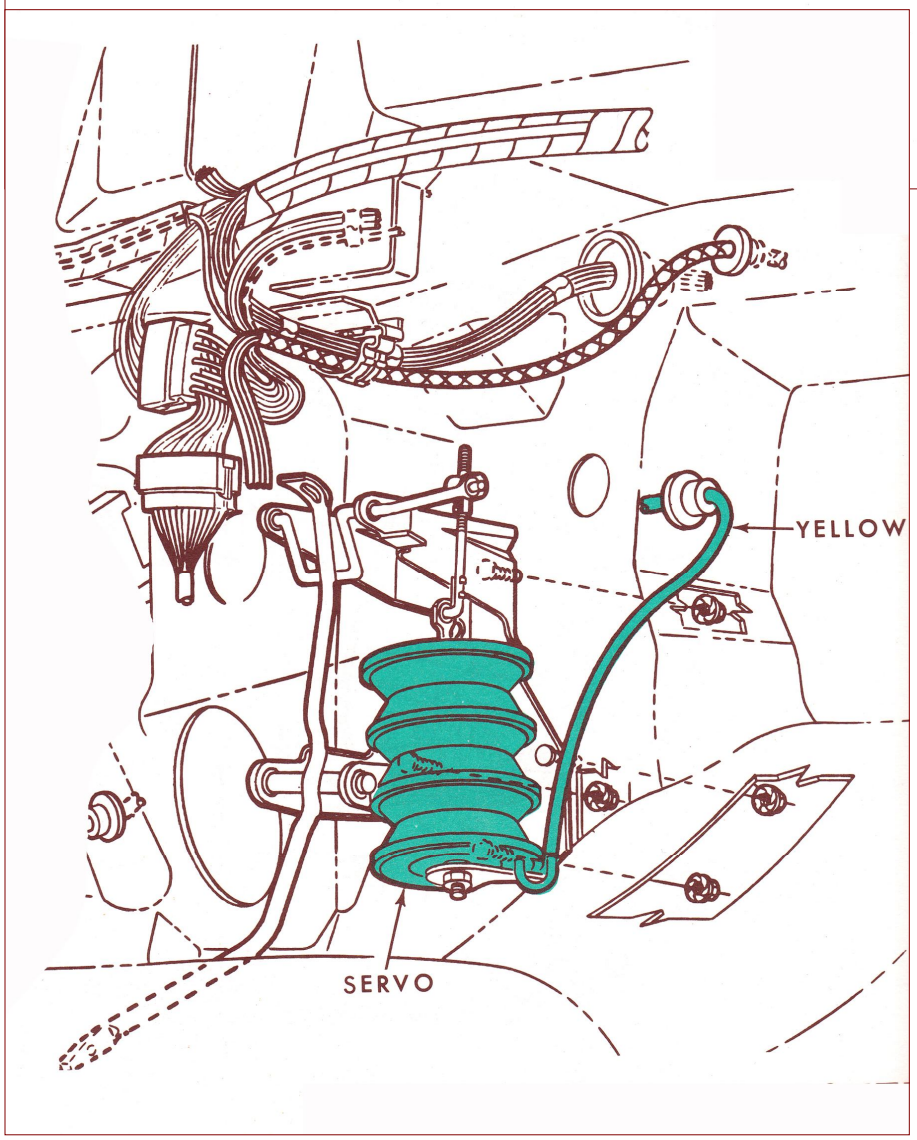
YELLOW
SERVO